AUTHENTICATED
U.S. GOVERNMENT
INFORMATION
GPO

Federal Register

12–27–02 Friday
Vol. 67 No. 249 Dec. 27, 2002
Pages 78959–79512

The **FEDERAL REGISTER** is published daily, Monday through Friday, except official holidays, by the Office of the Federal Register, National Archives and Records Administration, Washington, DC 20408, under the Federal Register Act (44 U.S.C. Ch. 15) and the regulations of the Administrative Committee of the Federal Register (1 CFR Ch. I). The Superintendent of Documents, U.S. Government Printing Office, Washington, DC 20402 is the exclusive distributor of the official edition.

The **Federal Register** provides a uniform system for making available to the public regulations and legal notices issued by Federal agencies. These include Presidential proclamations and Executive Orders, Federal agency documents having general applicability and legal effect, documents required to be published by act of Congress, and other Federal agency documents of public interest.

Documents are on file for public inspection in the Office of the Federal Register the day before they are published, unless the issuing agency requests earlier filing. For a list of documents currently on file for public inspection, see http://www.nara.gov/fedreg.

The seal of the National Archives and Records Administration authenticates the Federal Register as the official serial publication established under the Federal Register Act. Under 44 U.S.C. 1507, the contents of the **Federal Register** shall be judicially noticed.

The **Federal Register** is published in paper and on 24x microfiche. It is also available online at no charge as one of the databases on GPO Access, a service of the U.S. Government Printing Office.

The online edition of the **Federal Register** is issued under the authority of the Administrative Committee of the Federal Register as the official legal equivalent of the paper and microfiche editions (44 U.S.C. 4101 and 1 CFR 5.10). It is updated by 6 a.m. each day the **Federal Register** is published and it includes both text and graphics from Volume 59, Number 1 (January 2, 1994) forward.

GPO Access users can choose to retrieve online **Federal Register** documents as TEXT (ASCII text, graphics omitted), PDF (Adobe Portable Document Format, including full text and all graphics), or SUMMARY (abbreviated text) files. Users should carefully check retrieved material to ensure that documents were properly downloaded.

On the World Wide Web, connect to the **Federal Register** at http://www.access.gpo.gov/nara. Those without World Wide Web access can also connect with a local WAIS client, by Telnet to swais.access.gpo.gov, or by dialing (202) 512–1661 with a computer and modem. When using Telnet or modem, type swais, then log in as guest with no password.

For more information about GPO Access, contact the GPO Access User Support Team by E-mail at gpoaccess@gpo.gov; by fax at (202) 512–1262; or call (202) 512–1530 or 1–888–293–6498 (toll free) between 7 a.m. and 5 p.m. Eastern time, Monday–Friday, except Federal holidays.

The annual subscription price for the **Federal Register** paper edition is $699, or $764 for a combined **Federal Register, Federal Register** Index and List of CFR Sections Affected (LSA) subscription; the microfiche edition of the **Federal Register** including the **Federal Register** Index and LSA is $264. Six month subscriptions are available for one-half the annual rate. The charge for individual copies in paper form is $10.00 for each issue, or $10.00 for each group of pages as actually bound; or $2.00 for each issue in microfiche form. All prices include regular domestic postage and handling. International customers please add 25% for foreign handling. Remit check or money order, made payable to the Superintendent of Documents, or charge to your GPO Deposit Account, VISA, MasterCard or Discover. Mail to: New Orders, Superintendent of Documents, P.O. Box 371954, Pittsburgh, PA 15250–7954.

There are no restrictions on the republication of material appearing in the **Federal Register.**

How To Cite This Publication: Use the volume number and the page number. Example: 67 FR 12345.

SUBSCRIPTIONS AND COPIES

PUBLIC

Subscriptions:

Paper or fiche	**202–512–1800**
Assistance with public subscriptions	**202–512–1806**

General online information **202–512–1530; 1–888–293–6498**

Single copies/back copies:

Paper or fiche	**202–512–1800**
Assistance with public single copies	**1–866–512–1800 (Toll-Free)**

FEDERAL AGENCIES

Subscriptions:

Paper or fiche	**202–741–6005**
Assistance with Federal agency subscriptions	**202–741–6005**

What's NEW!

Federal Register Table of Contents via e-mail

Subscribe to FEDREGTOC, to receive the **Federal Register** Table of Contents in your e-mail every day.

If you get the HTML version, you can click directly to any document in the issue.

To subscribe, go to **http://listserv.access.gpo.gov** and select:

Online mailing list archives
FEDREGTOC-L
Join or leave the list

Then follow the instructions.

Printed on recycled paper.

Contents

Federal Register

Vol. 67, No. 249

Friday, December 27, 2002

Agriculture Department
See Forest Service
See Natural Resources Conservation Service
See Rural Housing Service

Alcohol, Tobacco and Firearms Bureau
PROPOSED RULES
Alcoholic beverages:
Labeling and advertising; organic claims, 79011–79012

Antitrust Division
NOTICES
National cooperative research notifications:
National Center for Manufacturing Sciences, Inc., 79150
PKI Forum, Inc., 79151

Army Department
NOTICES
Environmental statements; availability, etc.:
Blue Grass Army Depot, KY; destruction of chemical agents and munitions, 79063–79064

Arts and Humanities, National Foundation
See National Foundation on the Arts and the Humanities

Blind or Severely Disabled, Committee for Purchase From People Who Are
See Committee for Purchase From People Who Are Blind or Severely Disabled

Centers for Disease Control and Prevention
NOTICES
Agency information collection activities:
Proposed collection; comment request, 79103–79107
Grants and cooperative agreements; availability, etc.:
Systems-Based Diabetes Prevention and Control Programs, 79107

Centers for Medicare & Medicaid Services
NOTICES
Committees; establishment, renewal, termination, etc.:
Ambulatory Payment Classification Groups Advisory Panel; meeting, 79107–79109
Medicare Coverage Advisory Committee, 79109
Medicaid:
State plan amendments, reconsideration; hearings—
New Jersey, 79121–79122
Medicaid and Medicare:
Program issuances and coverage decisions; quarterly listing, 79109–79121
Medicare:
Medicare+Choice organizations—
Risk adjustment; training sessions, 79122–79123
Skilled nursing facilities—
Prospective payment system and consolidated billing; correction, 79123–79124
Meetings:
Medicare Coverage Advisory Committee, 79124–79125
Practicing Physicians Advisory Council, 79125–79126

Coast Guard
RULES
Drawbridge operations:
Iowa, 78975–78979
PROPOSED RULES
Drawbridge operations:
New York, 79012–79014
Ports and waterways safety:
Puget Sound, WA; protection of tank ships; security zone, 79017–79020
San Pedro Bay, CA; liquefied hazardous gas tank vessels; security zones, 79014–79017
NOTICES
Deepwater ports:
Port Pelican LLC, license, 79234–79235
Meetings:
Great Lakes Pilotage Advisory Committee, 79235

Commerce Department
See Foreign-Trade Zones Board
See International Trade Administration
See National Oceanic and Atmospheric Administration
NOTICES
Agency information collection activities:
Submission for OMB review; comment request, 79045–79046

Committee for Purchase From People Who Are Blind or Severely Disabled
NOTICES
Procurement list; additions and deletions, 79042–79045

Community Development Financial Institutions Fund
NOTICES
Meetings:
Community Development Advisory Board, 79242

Comptroller of the Currency
NOTICES
Agency information collection activities:
Submission for OMB review; comment request, 79242–79243

Defense Department
See Army Department
NOTICES
Agency information collection activities:
Proposed collection; comment request, 79062–79063
Meetings:
Women in the Services Advisory Committee, 79063

Education Department
RULES
Educational research and improvement:
CFR parts removed due to Education Sciences Reform Act, 78979
NOTICES
Grants and cooperative agreements; availability, etc.:
Postsecondary Education Improvement Fund, 79064–79068

Employment Standards Administration
NOTICES
Minimum wages for Federal and federally-assisted construction; general wage determination decisions, 79151–79152

Energy Department
See Energy Efficiency and Renewable Energy Office
See Federal Energy Regulatory Commission
NOTICES
Energy Employees Occupational Illness Compensation Act; list of covered facilities, 79068–79074

Energy Efficiency and Renewable Energy Office
NOTICES
Energy conservation:
Commercial and industrial equipment; energy efficiency program—
CSA International; electric motor efficiency; classification determination, 79479–79490
Underwriters Laboratories Inc.; electric motor efficiency; classification determination, 79489–79498

Environmental Protection Agency
RULES
Air programs:
Stratospheric ozone protection—
Essential use allowances allocation 2003 CY, 79507–79512
Air quality implementation plans; approval and promulgation; various States:
North Carolina, 78980–78989
PROPOSED RULES
Air programs:
Ambient air quality standards, national—
Ozone; 1-hour standard applicability; stay of authority, 79459–79463
Air quality implementation plans; approval and promulgation; various States:
North Carolina, 79028–79029
Water programs:
Water quality planning and management and National Pollutant Discharge Elimination System program; total maximum daily loads, 79020–79028
NOTICES
Air pollution control:
World Trade Center disaster—
Exposure and human health information; voluntary data call-in, 79079
Committees; establishment, renewal, termination, etc.:
Science Advisory Board, 79079–79081
Environmental statements; availability, etc.:
Agency statements—
Comment availability, 79081–79082
Weekly receipts, 79082
Grants and cooperative agreements; availability, etc.:
National Brownfields Job Training Program, 79083
National Environmental Information Exchange Network, 79083–79088
Meetings:
Environmental Laboratory Advisory Board, 79088
Mobile Sources Technical Review Subcommittee, 79088–79089
Reports and guidance documents; availability, etc.:
World Trade Center disaster—
Exposure and human health evaluation of airborne pollution, and toxicological effects of fine particle matter, 79089–79090
Water quality criteria:
Ambient aquatic life—
Tributyltin, 79090–79091
National recommended criteria; revision, 79091–79095
Environmental statements; notice of intent:
Coastal nonpoint pollution control program; States and territories—
Wisconsin, 79061

Executive Office of the President
See Management and Budget Office
See Trade Representative, Office of United States

Federal Aviation Administration
RULES
Air carrier certification and operations:
Service difficulty reports; effective date delay, 78970–78971
Airworthiness directives:
Brackett Aircraft Co., 78968–78970
Gulfstream Aerospace, 78963–78965
Textron Lycoming, 78965–78968
Airworthiness standards:
Special conditions—
McDonnell Douglas Models DC-9-14, DC-9-15, DC-9-31, DC-9-32, DC-9-32F, DC-9-33F, and DC-9-41 airplanes, 78961–78963
Standard instrument approach procedures
CFR correction, 78970
PROPOSED RULES
Airworthiness directives:
Air Tractor, Inc., 79008–79011
General Electric Co., 79007–79008
NOTICES
Aeronautical land-use assurance; waivers:
Nashville International Airport, TN, 79235–79236
Agency information collection activities:
Submission for OMB review; comment request, 79236
Passenger facility charges; applications, etc.:
Texarkana Regional Airport, AR, 79237

Federal Communications Commission
NOTICES
Common carrier services:
In-region interLATA services—
BellSouth Corp. et al.; application to provide services in Florida and Tennessee, 79098–79099
SBC Communications Inc. et al.; application to provide services in California, 79095–79098

Federal Deposit Insurance Corporation
RULES
Practice and procedure:
Filing procedures, unsafe and unsound banking practices, transfer agents registration, international banking, management official interlocks, etc., 79245–79270
PROPOSED RULES
Practice and procedure:
Filing procedures, corporate powers, international banking, and management official interlocks; technical corrections and modifications, 79270–79275
NOTICES
Reports and guidance documents; availability, etc.:
Bank merger transactions; policy statement, 79277–79278
Deposit insurance applications; policy statement, 79275–79278

Federal Election Commission
RULES
Contribution and expenditure limitations and prohibitions:
Contribution limits increase, prohibition on contributions and donations by minors, and expenditures by foreign nationals
Transmittal to Congress; effective date delay and correction, 78959

Federal Energy Regulatory Commission
NOTICES
Hydroelectric applications, 79074–79077
Meetings:
Capital availability for energy markets; technical conference, 79077
Reports and guidance documents; availability, etc.:
Electric Quarterly Reports; public utility filing requirements and software demonstrations, 79077–79079
Applications, hearings, determinations, etc.:
Tennessee Gas Pipeline Co., 79074

Federal Housing Finance Board
RULES
Federal home loan bank system:
Conventional one-family non-farm mortgage loans; rates and terms monthly survey; procedures, 78959–78961
NOTICES
Federal home loan bank system:
Conventional one-family non-farm mortgage loans; rates and terms monthly survey, 79099–79102

Federal Maritime Commission
PROPOSED RULES
Passenger vessel financial responsibility:
Performance and casualty rules, Alternative Dispute Resolution program, etc.; miscellaneous amendments, 79029
NOTICES
Agreements filed, etc., 79102

Federal Motor Carrier Safety Administration
NOTICES
Motor carrier safety standards:
Exemption applications—
Weirton Steel Corp., 79237–79238

Fish and Wildlife Service
NOTICES
Endangered and threatened species permit applications, 79130–79131
Grants and cooperative agreements; availability, etc.:
Tribal Landowner Incentive Program, 79131–79136
Tribal Wildlife Program, 79136–79140

Food and Drug Administration
RULES
Animal drugs, feeds, and related products:
Danofloxacin, 78972–78973
Neomycin sulfate soluble powder, 78971
Trenbolone acetate and estradiol benzoate, 78971–78972
NOTICES
Agency information collection activities:
Proposed collection; comment request, 79126–79129

Foreign Assets Control Office
RULES
Sanctions regulations, etc.:
Yugoslavia (Serbia and Montenegro) and Bosnian Serb-controlled areas of the Republic of Bosnia and Herzegovina; unblocking of assets, 78973–78975

Foreign-Trade Zones Board
NOTICES
Applications, hearings, determinations, etc.:
Alabama
Mercedes-Benz U.S. International, Inc.; motor vehicle manufacturing plant, 79046–79047
Indiana
Decatur Mold, Tool & Engineering, Inc.; plastic injection mold manufacturing and warehousing facilities, 79047
Louisiana
Ergon St. James, Inc.; oil terminal facilities, 79047–79048
Mississippi
Ergon Refining, Inc.; oil refinery complex, 79048
South Carolina
Fuji Photo Film, Inc.; medical imaging products and color negative photographic film and paper production facilities, 79048–79049

Forest Service
NOTICES
Meetings:
Resouce Advisory Committees—
John Day/Snake, 79030

Health and Human Services Department
See Centers for Disease Control and Prevention
See Centers for Medicare & Medicaid Services
See Food and Drug Administration
See Health Resources and Services Administration
NOTICES
Agency information collection activities:
Proposed collection; comment request, 79102–79103
Submission for OMB review; comment request, 79103
Meetings:
Blood Safety and Availability Advisory Committee, 79103

Health Resources and Services Administration
RULES
National Vaccine Injury Compensation Program; materials related to petitions; service of process, 78989–78990

Housing and Urban Development Department
NOTICES
Grants and cooperative agreements; availability, etc.:
Facilities to assist homeless—
Excess and surplus Federal property, 79129

Interior Department
See Fish and Wildlife Service
See Land Management Bureau
See Minerals Management Service
See Reclamation Bureau
NOTICES
Meetings:
Financial assistance programs; consultation meetings, 79129–79130

Internal Revenue Service
NOTICES
Agency information collection activities:
Proposed collection; comment request, 79243

International Trade Administration
NOTICES
Antidumping:
Fresh garlic from—
China, 79049
Saccharin from—
China, 79049–79056
Grants and cooperative agreements; availability, etc.:
Eurasia; Special American Business Internship Training Program, 79056–79059
Overseas trade missions:
2003 trade missions—
Information and Communication Technology Trade Mission, Toronto, Canada, et al., 79059–79060

International Trade Commission
NOTICES
Antidumping:
Drams and dram modules from—
Korea, 79148
Import investigations:
Tool handles, tool holders, tool sets, and components, 79148–79149
U.S.-Australia Free Trade Agreement; probable economic effect, 79149–79150

Justice Department
See Antitrust Division

Labor Department
See Employment Standards Administration
See Labor-Management Standards Office

Labor-Management Standards Office
PROPOSED RULES
Labor-management standards:
Labor organization annual financial reports, 79279–79414

Land Management Bureau
NOTICES
Meetings:
Resource Advisory Councils—
Arizona, 79141
Southwest Colorado and Northwest Colorado, 79140–79141
Public land orders:
Idaho and Montana, 79141
Survey plat filings:
Wyoming, 79141–79142

Management and Budget Office
NOTICES
North American Industry Classification System; 2007 updates, 79499–79506

Maritime Administration
NOTICES
Deepwater ports:
Port Pelican LLC; license, 79234–79235

Minerals Management Service
NOTICES
Agency information collection activities:
Proposed collection; comment request, 79142–79144

National Credit Union Administration
PROPOSED RULES
Credit unions:
Investment and deposit activities and Regulatory Flexibility Program, 78996–79007
NOTICES
Agency information collection activities:
Proposed collection; comment request, 79152–79153
Credit unions:
Community Development Revolving Loan Fund Loan Program; application period, 79153
Reports and guidance documents; availability, etc.:
Corporate federal credit union bylaws, changes; comment request, 79153–79160

National Foundation on the Arts and the Humanities
NOTICES
Meetings:
Humanities Panel, 79160–79161

National Highway Traffic Safety Administration
RULES
Motor vehicle safety standards:
Platform lift systems for accessible vehicles and platform lift installations on vehicles, 79415–79451
NOTICES
Agency information collection activities:
Submission for OMB review; comment request, 79238

National Oceanic and Atmospheric Administration
RULES
Fishery conservation and management:
Atlantic highly migratory species—
Commercial shark management measures, 78990–78993
Northeastern United States fisheries—
Atlantic bluefish, 78994–78995
Atlantic mackerel, squid, and butterfish, 78994
NOTICES
Agency information collection activities:
Proposed collection; comment request, 79060–79061
Environmental statements; notice of intent:
Coastal nonpoint pollution control program; States and territories—
Wisconsin, 79061
Meetings:
Commercial Remote Sensing Advisory Committee, 79061–79062
North Pacific Fishery Management Council, 79062

National Science Foundation
NOTICES
Agency information collection activities:
Proposed collection; comment request, 79161–79162

Natural Resources Conservation Service
NOTICES
Agency information collection activities:
Proposed collection; comment request, 79030

Nuclear Regulatory Commission
NOTICES
Meetings:
Alternative sites; review criteria, 79165–79166
Reactor Safeguards Advisory Committee, 79166–79168
Risk-informed post-fire safe-shutdown circuit analysis inspection; workshop, 79168–79169
Applications, hearings, determinations, etc.:
PermaGrain Products, Inc., 79162–79163

PSEG Nuclear LLC, 79163–79165

Nuclear Waste Technical Review Board
NOTICES
Meetings:
Yucca Mountain, NV, 79169–79170

Office of Management and Budget
See Management and Budget Office

Office of United States Trade Representative
See Trade Representative, Office of United States

Personnel Management Office
RULES
Prevailing rate systems
CFR correction, 78959

Public Health Service
See Centers for Disease Control and Prevention
See Food and Drug Administration
See Health Resources and Services Administration

Reclamation Bureau
NOTICES
Agency information collection activities:
Proposed collection; comment request, 79144–79148

Rural Housing Service
NOTICES
Grants and cooperative agreements; availability, etc.:
Section 514 Farm Labor Housing Loans and Section 516 Farm Labor Housing Grants for Off-Farm Housing, 79030–79033
Section 515 Rural Rental Housing Program, 79033–79036
Section 533 Housing Preservation Program, 79036–79038
Section 538 Guaranteed Rural Rental Housing Program, 79038–79042

Securities and Exchange Commission
RULES
Securities:
Trade-through disclosure rules for options; repeal, 79453–79458
PROPOSED RULES
Securities, etc.:
Electronic filing and website posting for Forms 3, 4, and 5; statutory mandate, 79465–79477
NOTICES
Investment Company Act of 1940:
Deregistration applications—
Principal Partners LargeCap Growth Fund, Inc., et al., 79170–79171
Joint Industry Plan:
International Securities Exchange, Inc., et al., 79171–79172
Self-regulatory organizations:
Clearing agency registration applications—
Philadelphia Depository Trust Co., 79172–79174
Self-regulatory organizations; proposed rule changes:
American Stock Exchange LLC, 79174–79187
Boston Stock Exchange, Inc., 79187–79189
Chicago Board Options Exchange, Inc., 79189–79202
Chicago Board Options Exchange, Inc.; correction, 79195–79196
International Securities Exchange LLC, 79202–79203
National Association of Securities Dealers, Inc., 79203–79214
New York Stock Exchange, Inc., 79214–79218
OneChicago, LLC, 79218–79219
Pacific Exchange, Inc., 79219–79221
Philadelphia Stock Exchange, Inc., 79221–79227

Small Business Administration
NOTICES
Disaster loan areas:
Guam, 79227

State Department
NOTICES
Presidential permits:
Aggregate Products Inc.; international conveyor belt construction, operation, and maintenance on U.S.-Mexican border, 79228–79231

Surface Transportation Board
NOTICES
Motor carriers:
Control applications—
Peter Pan Bus Lines Trust, 79239
Rail carriers:
Cost recovery procedures—
Adjustment factor, 79240
Railroad operation, acquisition, construction; etc.:
Empire Builder Investments Inc., 79240

Trade Representative, Office of United States
NOTICES
Free Trade Area of the Americas Agreement:
Committee of Government Representatives on Participation of Civil Society; invitation to comment on FTAA, 79231–79232
Consolidated texts; comment request, 79232–79234

Transportation Department
See Coast Guard
See Federal Aviation Administration
See Federal Motor Carrier Safety Administration
See Maritime Administration
See National Highway Traffic Safety Administration
See Surface Transportation Board

Treasury Department
See Alcohol, Tobacco and Firearms Bureau
See Community Development Financial Institutions Fund
See Comptroller of the Currency
See Foreign Assets Control Office
See Internal Revenue Service
NOTICES
Agency information collection activities:
Submission for OMB review; comment request, 79240–79241

Veterans Affairs Department
RULES
Adjudication; pensions, compensation, dependency, etc.:
Persian Gulf War veterans; undiagnosed illnesses compensation; presumptive period extension, 78979–78980
PROPOSED RULES
Semi-annual agenda
Correction, 79020
NOTICES
Meetings:
Education Advisory Committee, 79243–79244
VA Nursing National Commission, 79244

Separate Parts In This Issue

Part II
Federal Deposit Insurance Corporation, 79245–79278

Part III
Labor Department, Labor-Management Standards Office, 79279–79414

Part IV
Transportation Department, National Highway Traffic Safety Administration, 79415–79451

Part V
Securities and Exchange Commission, 79453–79458

Part VI
Environmental Protection Agency, 79459–79463

Part VII
Securities and Exchange Commission, 79465–79477

Part VIII
Energy Department, Energy Efficiency and Renewable Energy Office, 79479–79498

Part IX
Executive Office of the President, Management and Budget Office, 79499–79506

Part X
Environmental Protection Agency, 79507–79512

Reader Aids

Consult the Reader Aids section at the end of this issue for phone numbers, online resources, finding aids, reminders, and notice of recently enacted public laws.

To subscribe to the Federal Register Table of Contents LISTSERV electronic mailing list, go to http://listserv.access.gpo.gov and select Online mailing list archives, FEDREGTOC-L, Join or leave the list (or change settings); then follow the instructions.

CFR PARTS AFFECTED IN THIS ISSUE

A cumulative list of the parts affected this month can be found in the Reader Aids section at the end of this issue.

5 CFR
532 78959

11 CFR
110 78959

12 CFR
303 79246
906 78959

Proposed Rules:
303 79271
333 79271
347 79271
348 79271
359 79271
703 78996
742 78996

14 CFR
25 78961
39 (3 documents) 78963, 78965, 78968
95 78970
121 78970
125 78970
135 78970
145 78970

Proposed Rules:
39 (2 documents) 79007, 79008

17 CFR
240 79454

Proposed Rules:
230 79466
232 79466
239 79466
240 79466
249 79466
250 79466
259 79466
260 79466
269 79466
274 79466

21 CFR
520 78971
522 (2 documents) 78971, 78972
556 78972

27 CFR

Proposed Rules:
4 79011
5 79011
7 79011
13 79011

29 CFR

Proposed Rules:
403 79280
408 79280

31 CFR
585 78973
586 78973

33 CFR
117 (2 documents) 78975, 78977

Proposed Rules:
117 79012
165 (2 documents) 79014, 79017

34 CFR
700 78979
701 78979
702 78979

38 CFR
3 78979

Proposed Rules:
Ch. 1 79020

40 CFR
52 (3 documents) 78980, 78983, 78987
82 79508

Proposed Rules:
9 79020
50 79460
52 79028
122 79020
123 79020
124 79020
130 79020

45 CFR
4 78989

46 CFR

Proposed Rules:
540 79029

49 CFR
571 79416

50 CFR
635 78990
648 (2 documents) 78994

Rules and Regulations

Federal Register

Vol. 67, No. 249

Friday, December 27, 2002

This section of the FEDERAL REGISTER contains regulatory documents having general applicability and legal effect, most of which are keyed to and codified in the Code of Federal Regulations, which is published under 50 titles pursuant to 44 U.S.C. 1510.

The Code of Federal Regulations is sold by the Superintendent of Documents. Prices of new books are listed in the first FEDERAL REGISTER issue of each week.

OFFICE OF PERSONNEL MANAGEMENT

5 CFR Part 532

Prevailing Rate Systems

CFR Correction

In Title 5 of the Code of Federal Regulations, parts 1 to 699, revised as of January 1, 2002, on page 397, Appendix A to Subpart B of Part 532 is corrected by adding footnote reference ''1'' for South Dakota in the second column after Eastern South Dakota, and on page 399, Appendix B to Subpart B of Part 532 is corrected by removing footnote 1 at the end of the table.

[FR Doc. 02–55527 Filed 12–26–02; 8:45 am]

BILLING CODE 1505–01–D

FEDERAL ELECTION COMMISSION

11 CFR Part 110

[Notice 2002–30]

Contribution Limitations and Prohibitions: Delay of Effective Date and Correction

AGENCY: Federal Election Commission.

ACTION: Final rule; delay of effective date and correction.

SUMMARY: The Federal Election Commission is publishing a correction to the final rules governing contributions limitations and prohibitions that were published in the **Federal Register** on November 19, 2002 (67 FR 69928). The correction: (1) Changes the effective date for revised 11 CFR 110.9 from January 1 to January 13, 2003; and (2) deletes the word ''authorized'' in referencing political committees in regulations pertaining to reattribution of contributions.

DATES: As of December 27, 2002, the effective date of 11 CFR 110.9 that was revised on November 19, 2002 (67 FR 69928) is delayed until January 13, 2002. The effective date of the correction to 11 CFR 110.1(k)(3)(ii) is January 1, 2003.

FOR FURTHER INFORMATION CONTACT: Ms. Mai T. Dinh, Acting Assistant General Counsel, 999 E Street, NW., Washington, DC 20463, (202) 694–1650 or (800) 424–9530.

SUPPLEMENTARY INFORMATION: The Federal Election Commission published in the **Federal Register** on November 19, 2002, final rules implementing amendments made by the Bipartisan Campaign Reform Act of 2002 (''BCRA'') to the contribution limitations and prohibitions of the Federal Election Campaign Act of 1971, as amended (''FECA'') (67 FR 69928). These final rules were published with a January 1, 2003 effective date. Among other things, the final rules revised 11 CFR 110.9 so that it now addresses only violations of the contributions and expenditure limitations rather than four miscellaneous topics, including fraudulent misrepresentation. The general fraudulent misrepresentation provision formerly found at 11 CFR 110.9(b) was moved to new 11 CFR 110.16(a) in another BCRA rulemaking entitled ''Disclaimers, Fraudulent Solicitation, Civil Penalties, and Personal Use of Campaign Funds.'' The Commission had anticipated that the effective dates for the ''Contribution Limitations and Prohibitions'' and ''Disclaimers, Fraudulent Solicitation, Civil Penalties, and Personal Use of Campaign Funds'' rulemaking projects would be January 1, 2003. However, due to scheduling changes, the effective date for ''Disclaimers, Fraudulent Solicitation, Civil Penalties, and Personal Use of Campaign Funds'' is now January 13, 2002. Consequently, this correction delays the effective date for the final rules at 11 CFR 110.9 to January 13, 2003. The effective date remains January 1, 2003 for all other final rules governing contribution limitations and prohibitions that were published in the **Federal Register** on November 19, 2002.

The final rules published on November 19, 2002 also addressed the procedure governing the reattribution of excessive contributions from one contributor to another in 11 CFR 110.1(k). The final rules at 11 CFR 110.1(k)(3)(ii)(A)(*1*) and 110.1(k)(3)(ii)(B)(*2*), which describe steps a recipient political committee must take when reattributing excessive contributions from one contributor to another, inadvertently included the word ''authorized'' before the phrase ''political committee.'' As made clear in the Explanation and Justification accompanying the final rules, the reattribution procedure is available to all political committees, not just authorized committees. *See* 67 FR 69932. Thus, this correction deletes the word ''authorized'' in 11 CFR 110.1(k)(3)(ii)(A)(*1*) and 110.1(k)(3)(ii)(B)(*2*).

Correction of Publication

Accordingly, the publication of final regulations on November 19, 2002 (67 FR 69928), which were the subject of FR Doc. 2002–00022, is corrected as follows:

On page 69948, in the first and second columns, respectively, remove ''authorized'' from 11 CFR 110.1(k)(3)(ii)(A)(*1*) and 110.1(k)(3)(ii)(B)(*2*).

Dated: December 23, 2002.

Ellen L. Weintraub,

Vice Chair, Federal Election Commission.

[FR Doc. 02–32711 Filed 12–26–02; 8:45 am]

BILLING CODE 6715–01–P

FEDERAL HOUSING FINANCE BOARD

12 CFR Part 906

[No. 2002–62]

RIN 3069–AB23

Procedure for Conducting Monthly Survey of Rates and Terms on Conventional One-Family Non-farm Mortgage Loans

AGENCY: Federal Housing Finance Board.

ACTION: Final rule.

SUMMARY: The Federal Housing Finance Board (Finance Board) is making certain technical amendments to its regulation setting forth the practices and procedures for conducting the Monthly Survey of Rates and Terms on Conventional One-Family, Non-farm Mortgage Loans (Monthly Interest Rate Survey or MIRS). The amendments are being adopted solely to conform the text of the rule to the revised practices and

procedures for MIRS sampling and weighting methodology, which are the subject of a Notice published elsewhere in this issue of the **Federal Register**.

EFFECTIVE DATE: This rule will become effective on January 27, 2003.

FOR FURTHER INFORMATION CONTACT: Joseph A. McKenzie, Deputy Chief Economist, (202) 408–2845 or *mckenziej@fhfb.gov;* Charlotte A. Reid, Special Counsel, Office of General Counsel (202) 408–2510 or reidc@fhfhb.gov; Federal Housing Finance Board, 1777 F Street, NW., Washington, DC 20006.

SUPPLEMENTARY INFORMATION: On September 26, 2000, the Finance Board published in the **Federal Register** (65 FR 57813) a notice proposing several changes to the Monthly Interest Rate Survey (preliminary notice). MIRS provides a statistical base for certain housing finance benchmarks, such as the annual adjustments to the maximum dollar limits for the purchase of conventional mortgages by Fannie Mae and Freddie Mac. *See* 12 U.S.C. 1717(b)(2), 1454(a)(2), respectively.[1]

The preliminary notice recommended revising the sampling and weighting methodology from one based on lender type and region to one based solely on lender size, eliminating the monthly table of mortgage interest rates and terms by lender type (Table III of the monthly MIRS release), and adjusting the quarterly table of mortgage rates and terms by metropolitan area by adding and deleting several metropolitan areas so that only the largest 32 metropolitan areas would be reported (Table IV of the January, April, July, and October MIRS releases).

Changes to MIRS are authorized under Federal Home Loan Bank Act (Act) provisions that require the on-going availability of indexes used to calculate the interest rates on adjustable rate mortgages (ARMs).[2] The Act expressly permits the Chairperson of the Finance Board to approve changes to the methodology that affect the availability of adjustable rate mortgage indexes. Additionally, the Finance Board may substitute substantially similar indexes if it can no longer make an index available and ''if the * * * Chairperson of the Finance Board * * * determines, after notice and opportunity for comment, that: (A) The new index is based on data substantially similar to that of the original index; and (B) the substitution of the new index will result in an interest rate substantially similar to the rate in effect at the time the original index became unavailable.'' See 12 U.S.C. 1437 note.

Under this authority, and in response to the comments on the preliminary notice received by the Finance Board, the Chairman of the Finance Board has authorized certain changes to MIRS data sampling and weighting methodology and the designation of substitute indexes. These changes are set forth in a final Notice that is published elsewhere in this issue of the **Federal Register**. In accordance with the final Notice, MIRS data will use a sampling and weighting methodology based on lender size and lender type. There will be four lender-size classes and three lender-type classes (commercial banks, mortgage companies, and savings institutions). Table III of the monthly MIRS release will continue to be made available, but the ''Savings and Loan Association'' and ''Mutual Savings Bank'' categories will be collapsed in to a single ''Savings Institutions'' category. The final Notice also will adjust the quarterly table of mortgage rates and terms by metropolitan area by adding and deleting several metropolitan areas so that only the largest 32 metropolitan areas would be reported (Table IV of the January, April, July, and October MIRS releases). Additionally, the Notice will designate certain substitute indexes.

Accordingly, section 906.3 of the Finance Board's regulations, which sets forth the existing practice and procedures for conducting MIRS, is being revised to reflect these changes. The final rule will replace the reference to savings and loan associations and mutual savings banks with a collective reference to ''savings institutions,'' and delete the reference to the number of lenders sampled. The final rule also adds a sentence stating that the preliminary MIRS weights are based on lender type and lender size. Other MIRS changes, such as the revision of Table IV and the designation of successor ARM index rates, do not require any textual changes to section 906.3 of the Finance Board's regulations.

The Finance Board is adopting these revisions in § 906.3 to ensure that the text of the rule is fully consistent with MIRS practice and procedures, as revised pursuant to the final Notice. The revisions in the rule are minimal and technical in nature, and are intended to achieve consistency in the descriptive terminology governing MIRS sampling and weighting methodology. Additionally, the Finance Board is deleting the provisions that are set forth in paragraph (c) of § 906.3 and in section 906.4 of the Finance Board's regulations, as obsolete. None of the rule text changes are intended to implement any regulatory changes to any substantive rights.

The changes to MIRS sampling and weighting methodology will be implemented in January 2003 and will be published in late February 2003. Changes to the published MIRS tables also will occur with the publication of the January 2003 data in late February. The January 2003 implementation will allow MIRS data to be weighted using a consistent methodology within each calendar year. The amendments to §§ 906.3 and 906.4 of the Finance Board's regulations also will be effective January 2003.

III. Regulatory Flexibility Act

The final rule applies only to the Finance Board, which does not come within the meaning of ''small entities,'' as defined in the Regulatory Flexibility Act (RFA). *See* 5 U.S.C. 601(6). Therefore, in accordance with section 605(b) of the RFA, *see id.* at 605(b), the Finance Board hereby certifies that this final rule will not have a significant economic impact on a substantial number of small entities.

IV. Paperwork Reduction Act

The final rule does not contain any substantive changes to MIRS data collection form or other information under the Paperwork Reduction Act of 1995. *See* 44 U.S.C. 3501 *et seq.* The current Office of Management and Budget clearance for the form is set to expire on June 30, 2004.

List of Subjects in 12 CFR Part 906

Organizational functions (Government agencies).

Accordingly, the Finance Board hereby amends title 12, chapter IX, Code of Federal Regulations as follows:

[1] 1 The Housing and Community Development Act of 1980 tied the Fannie Mae and Freddie Mac conforming loan limits to MIRS. *See* Pub. L. 96–399, Title III, Section 313(a), (b), 94 Stat. 1644–45 (Oct. 8, 1980). Specifically, Fannie Mae and Freddie Mac are required by their respective statutes, which are nearly identical, to base the annual dollar limit on the ''the national one-family house price in the monthly survey of all major lenders conducted by the [Finance Board].'' *See* 12 U.S.C. 1717(b)(2), 1454(a)(2) (conforming loan limit provisions). The Finance Board inherited the task of conducting MIRS from the former Federal Home Loan Bank Board (FHLBB) pursuant to section 402(e)(3) of the Financial Institutions Reform, Recovery, and Enforcement Act of 1989 (''FIRREA''), Pub. L. 101–73, Title VII, Section 402(e)(3), 103 Stat. 183 (1989), and was substituted for the former FHLBB in the conforming loan limit provisions pursuant to §§ 731(f)(1)(B) and (f)(2)(B) of FIRREA.

[2] Section 402(e)(3) of FIRREA amended the Act to specify that the Chairperson of the Finance Board ''shall take such action as may be necessary to assure that the indexes prepared by the * * * Federal Home Loan Bank Board * * * immediately prior to the enactment of this subsection and used to calculate the interest rate on adjustable-rate mortgage instruments continue to be available.'' *See* 12 U.S.C. 1437 note.

PART 906—OPERATIONS.

1. The authority citation for part 906 continues to read as follows:

Authority: 12 U.S.C. 1422a, 1422b, and 1437 note.

2. Revise § 906.3 to read as follows:

§ 906.3 Monthly interest rate survey.

The Finance Board conducts its Monthly Survey of Rates and Terms on Conventional One-Family Non-farm Mortgage Loans in the following manner:

(a) *Initial survey.* Each month, the Finance Board samples savings institutions, commercial banks, and mortgage loan companies, and asks them to report the terms and conditions on all conventional mortgages (*i.e.*, those not federally insured or guaranteed) used to purchase single-family homes that each such lender closes during the last five working days of the month. In most cases, the information is reported electronically in a format similar to Finance Board Form FHFB 10–91. The initial weights are based on lender type and lender size. The data also is weighted so that the pattern of weighted responses matches the actual pattern of mortgage originations by lender type and by region. The Finance Board tabulates the data and publishes standard data tables late in the following month.

(b) *Adjustable-rate mortgage index.* The weighted data, tabulated and published pursuant to paragraph (a) of this section, is used to compile the Finance Board's adjustable-rate mortgage index, entitled the ''National Average Contract Mortgage Rate for the Purchase of Previously Occupied Homes by Combined Lenders.'' This index is the successor to the index maintained by the former Federal Home Loan Bank Board and is used for determining the movement of the interest rate on renegotiable-rate mortgages and on some other adjustable-rate mortgages.

§ 906.4 [Removed and Reserved]

3. Remove and reserve § 906.4.

Dated: December 20, 2002.

By the Board of Directors of the Federal Housing Finance Board.

John T. Korsmo,

Chairman.

[FR Doc. 02–32753 Filed 12–26–02; 8:45 am]

BILLING CODE 6725–01–P

DEPARTMENT OF TRANSPORTATION

Federal Aviation Administration

14 CFR Part 25

[Docket No. NM241, Special Conditions No. 25–224–SC]

Special Conditions: McDonnell Douglas Model DC–9–14, DC–9–15, DC–9–31, DC–9–32, DC–9–32F, DC–9–33F, and DC–9–41 Airplanes; High Intensity Radiated Fields (HIRF).

AGENCY: Federal Aviation Administration (FAA), DOT.

ACTION: Final special conditions; request for comments.

SUMMARY: These special conditions are issued for Douglas Model DC–9–14, DC–9–15, DC–9–31, DC–9–32, DC–9–32F, DC–9–33F, and DC–9–41 airplanes modified by ABX Air Inc. These modified airplanes will have a novel or unusual design feature when compared to the state of technology envisioned in the airworthiness standards for transport category airplanes. The modification incorporates the installation of the Innovative Solutions and Support (IS&S) Duplex Reduced Vertical Separation Minimum (RVSM) system that performs critical functions. The applicable airworthiness regulations do not contain adequate or appropriate safety standards for the protection of this system from the effects of high-intensity radiated fields (HIRF). These special conditions contain the additional safety standards that the Administrator considers necessary to establish a level of safety equivalent to that established by the existing airworthiness standards.

DATES: The effective date of these special conditions is December 10, 2002. Comments must be received on or before January 27, 2003.

ADDRESSES: Comments on these special conditions may be mailed in duplicate to: Federal Aviation Administration, Transport Airplane Directorate, Attn: Rules Docket (ANM–113), Docket No. NM241, 1601 Lind Avenue SW., Renton, Washington, 98055–4056; or delivered in duplicate to the Transport Airplane Directorate at the above address. All comments must be marked: Docket No. NM241.

FOR FURTHER INFORMATION CONTACT: Meghan Gordon, FAA, Standardization Branch, ANM–113, Transport Airplane Directorate, Aircraft Certification Service, 1601 Lind Avenue SW., Renton, Washington, 98055–4056; telephone (425) 227–2138; facsimile (425) 227–1149.

SUPPLEMENTARY INFORMATION:

Comments Invited

The FAA has determined that notice and opportunity for prior public comment are impracticable because these procedures would significantly delay certification of the airplane and thus delivery of the affected aircraft. In addition, the substance of these special conditions has been subject to the public comment process in several prior instances with no substantive comments received. The FAA therefore finds that good cause exists for making these special conditions effective upon issuance; however, the FAA invites interested persons to participate in this rulemaking by submitting written comments, data, or views. The most helpful comments reference a specific portion of the special conditions, explain the reason for any recommended change, and include supporting data. We ask that you send us two copies of written comments.

We will file in the docket all comments we receive, as well as a report summarizing each substantive public contact with FAA personnel concerning these special conditions. The docket is available for public inspection before and after the comment closing date. If you wish to review the docket in person, go to the address in the **ADDRESSES** section of this preamble between 7:30 a.m. and 4:00 p.m., Monday through Friday, except Federal holidays.

We will consider all comments we receive on or before the closing date for comments. We will consider comments filed late if it is possible to do so without incurring expense or delay. We may change these special conditions based on the comments we receive.

If you want the FAA to acknowledge receipt of your comments on these special conditions, include with your comments a pre-addressed, stamped postcard on which the docket number appears. We will stamp the date on the postcard and mail it back to you.

Background

On July 7, 2002, ABX Air Inc. applied for a Supplemental Type Certificate (STC) to modify McDonnell Douglas Model DC–9–14, DC–9–15, DC–9–31, DC–9–32, DC–9–32F, DC–9–33F, and DC–9–41 airplanes. The DC–9 is a two-crew, two-engine, turbine airplane with a maximum weight up to 122,200 pounds. These models are currently approved under Type Certificate A6WE. The modification incorporates the installation of the IS&S Duplex RVSM system which will allow for the removal of the existing altitude alerter, encoding

altimeters, air data computer, and standby altimeter. This system uses two Air Data Display Units (ADDU) and a single Analog Interface Unit (AIU) to replace altitude displays and the air data computer. These displays can be susceptible to disruption to both command and response signals as a result of electrical and magnetic interference. This disruption of signals could result in the loss of all critical flight information displays and annunciations or the presentation of misleading information to the pilot.

Type Certification Basis

Under the provisions of 14 CFR 21.101, Amendment 21–69, effective September 16, 1991, ABX Air Inc. must show that McDonnell Douglas Model DC–9–14, DC–9–15, DC–9–31, DC–9–32, DC–9–32F, DC–9–33F, and DC–9–41 airplanes, as changed, continue to meet the applicable provisions of the regulations incorporated by reference in Type Certificate No. A6WE, or the applicable regulations in effect on the date of application for the change. Subsequent changes have been made to § 21.101 as part of Amendment 21–77, but those changes do not become effective until June 10, 2003. The regulations incorporated by reference in the type certificate are commonly referred to as the ''original type certification basis.'' The certification basis for the modified McDonnell Douglas Model DC–9–14, DC–9–15, DC–9–31, DC–9–32, DC–9–32F, DC–9–33F, and DC–9–41 airplanes includes 14 CFR part 25, effective February 1, 1965, as amended by Amendments 25–1 through 25–20, except for special conditions and exceptions noted in Type Certificate Data Sheet (TCDS) A6WE.

If the Administrator finds that the applicable airworthiness regulations (that is, part 25, as amended) do not contain adequate or appropriate safety standards for the McDonnell Douglas Model DC–9–14, DC–9–15, DC–9–31, DC–9–32, DC–9–32F, DC–9–33F, and DC–9–41 airplanes because of a novel or unusual design feature, special conditions are prescribed under the provisions of § 21.16.

In addition to the applicable airworthiness regulations and special conditions, McDonnell Douglas Model DC–9–14, DC–9–15, DC–9–31, DC–9–32, DC–9–32F, DC–9–33F, and DC–9–41 airplanes must comply with the fuel vent and exhaust emission requirements of part 34 and the noise certification requirements of part 36.

Special conditions, as defined in § 11.19, are issued in accordance with § 11.38 and become part of the type certification basis in accordance with § 21.101(b)(2), Amendment 21–69, effective September 16, 1991.

Special conditions are initially applicable to the model for which they are issued. Should ABX Air Inc. apply at a later date for a Supplemental Type Certificate to modify any other model included on Type Certificate No. A6WE to incorporate the same or similar novel or unusual design feature, these special conditions would also apply to the other model under the provisions of § 21.101(a)(1), Amendment 21–69, effective September 16, 1991.

Novel or Unusual Design Features

As noted earlier, the modified McDonnell Douglas Model DC–9–14, DC–9–15, DC–9–31, DC–9–32, DC–9–32F, DC–9–33F, and DC–9–41 airplanes will incorporate a new altitude display system, the Innovative Solutions and Support (IS&S) Duplex Reduced Vertical Separation Minimum (RVSM) system, that performs critical functions. This system may be vulnerable to HIRF external to the airplane. The current airworthiness standards of part 25 do not contain adequate or appropriate safety standards for protection of this equipment from the adverse effects of HIRF. Accordingly, this system is considered to be a novel or unusual design feature.

Discussion

There is no specific regulation that addresses protection requirements for electrical and electronic systems from HIRF. Increased power levels from ground-based radio transmitters and the growing use of sensitive avionic/electronic and electrical systems to command and control airplanes have made it necessary to provide adequate protection.

To ensure that a level of safety is achieved equivalent to that intended by the regulations incorporated by reference, special conditions are needed for the McDonnell Douglas Model DC–9–14, DC–9–15, DC–9–31, DC–9–32, DC–9–32F, DC–9–33F, and DC–9–41 airplanes modified by ABX Air Inc. These special conditions require that new avionics/electronic and electrical systems that perform critical functions be designed and installed to preclude component damage and interruption of function due to both the direct and indirect effects of HIRF.

High-Intensity Radiated Fields

With the trend toward increased power levels from ground-based transmitters and the advent of space and satellite communications, coupled with electronic command and control of the airplane, the immunity of critical avionic/electronic and electrical systems to HIRF must be established.

It is not possible to precisely define the HIRF to which the airplane will be exposed in service. There is also uncertainty concerning the effectiveness of airframe shielding for HIRF. Furthermore, coupling of electromagnetic energy to cockpit-installed equipment through the cockpit window apertures is undefined. Based on surveys and analysis of existing HIRF emitters, an adequate level of protection exists when compliance with the HIRF protection special condition is shown with either paragraph 1 or 2 below:

1. A minimum threat of 100 volts rms (root-mean-square) per meter electric field strength from 10 KHz to 18 GHz.

a. The threat must be applied to the system elements and their associated wiring harnesses without the benefit of airframe shielding.

b. Demonstration of this level of protection is established through system tests and analysis.

2. A threat external to the airframe of the field strengths identified in the table below for the frequency ranges indicated. Both peak and average field strength components from the table are to be demonstrated.

Frequency	Field strength (volts per meter)	
	Peak	Average
10 kHz–100 kHz	50	50
100 kHz–500 kHz	50	50
500 kHz–2 MHz	50	50
2 MHz–30 MHz	100	100
30 MHz–70 MHz	50	50
70 MHz–100 MHz	50	50
100 MHz–200 MHz	100	100

Frequency	Field strength (volts per meter)	
	Peak	Average
200 MHz–400 MHz	100	100
400 MHz–700 MHz	700	50
700 MHz–1 GHz	700	100
1 GHz– 2 GHz	2000	200
2 GHz–4 GHz	3000	200
4 GHz–6 GHz	3000	200
6 GHz–8 GHz	1000	200
8 GHz–12 GHz	3000	300
12 GHz–18 GHz	2000	200
18 GHz–40 GHz	600	200

Note.—The field strengths are expressed in terms of peak of the root-mean-square (rms) over the complete modulation period.

The threat levels identified above are the result of an FAA review of existing studies on the subject of HIRF, in light of the ongoing work of the Electromagnetic Effects Harmonization Working Group of the Aviation Rulemaking Advisory Committee.

Applicability

As discussed above, these special conditions are applicable to McDonnell Douglas Model DC–9–14, DC–9–15, DC–9–31, DC–9–32, DC–9–32F, DC–9–33F, and DC–9–41 airplanes modified by ABX Air Inc. Should ABX Air Inc. apply at a later date for a Supplemental Type Certificate to modify any other model included on Type Certificate A6WE to incorporate the same or similar novel or unusual design feature, these special conditions would apply to that model as well under the provisions of § 21.101(a)(1), Amendment 21–69, effective September 16, 1991.

Conclusion

This action affects only certain novel or unusual design features on McDonnell Douglas Model DC–9–14, DC–9–15, DC–9–31, DC–9–32, DC–9–32F, DC–9–33F, and DC–9–41 airplanes modified by ABX Air Inc. It is not a rule of general applicability and affects only the applicant who applied to the FAA for approval of these features on these airplanes.

The substance of these special conditions has been subjected to the notice and comment procedure in several prior instances and has been derived without substantive change from those previously issued. Because a delay would significantly affect the certification of the airplane, which is imminent, the FAA has determined that prior public notice and comment are unnecessary and impracticable, and good cause exists for adopting these special conditions upon issuance. The FAA is requesting comments to allow interested persons to submit views that may not have been submitted in response to the prior opportunities for comment described above.

List of Subjects in 14 CFR Part 25

Aircraft, Aviation safety, Reporting and recordkeeping requirements.

The authority citation for these special conditions is as follows:

Authority: 49 U.S.C. 106(g), 40113, 44701, 44702, 44704.

The Special Conditions

Accordingly, pursuant to the authority delegated to me by the Administrator, the following special conditions are issued as part of the Supplemental Type Certification basis for McDonnell Douglas Model DC–9–14, DC–9–15, DC–9–31, DC–9–32, DC–9–32F, DC–9–33F, and DC–9–41 airplanes modified by ABX Air Inc.

1. *Protection from Unwanted Effects of High-Intensity Radiated Fields (HIRF).* Each electrical and electronic system that performs critical functions must be designed and installed to ensure that the operation and operational capability of these systems to perform critical functions are not adversely affected when the airplane is exposed to high-intensity radiated fields.

2. For the purpose of these special conditions, the following definition applies: *Critical Functions.* Functions whose failure would contribute to or cause a failure condition that would prevent the continued safe flight and landing of the airplane.

Issued in Renton, Washington, on December 10, 2002.

Ali Bahrami,

Acting Manager, Transport Airplane Directorate, Aircraft Certification Service.

[FR Doc. 02–32786 Filed 12–26–02; 8:45 am]

BILLING CODE 4910–13–P

DEPARTMENT OF TRANSPORTATION

Federal Aviation Administration

14 CFR Part 39

[Docket No. 2002–NM–114–AD; Amendment 39–12902; AD 2002–20–06]

RIN 2120–AA64

Airworthiness Directives; Gulfstream Aerospace LP Model Astra SPX and 1125 Westwind Astra Series Airplanes

AGENCY: Federal Aviation Administration, DOT.

ACTION: Final rule.

SUMMARY: This amendment adopts a new airworthiness directive (AD), applicable to all Gulfstream Aerospace LP Model Astra SPX and 1125 Westwind Astra series airplanes, that requires revising the Airplane Flight Manual to advise the flightcrew to don oxygen masks as a first and immediate step following a cabin altitude alert. This action is necessary to prevent incapacitation of the flightcrew due to lack of oxygen. This action is intended to address the identified unsafe condition.

DATES: Effective January 31, 2003.

The incorporation by reference of certain publications listed in the regulations is approved by the Director of the Federal Register as of January 31, 2003.

ADDRESSES: The service information referenced in this AD may be obtained from Gulfstream Aerospace Corporation, P.O. Box 2206, Mail Station D25, Savannah, Georgia 31402. This information may be examined at the Federal Aviation Administration (FAA), Transport Airplane Directorate, Rules Docket, 1601 Lind Avenue, SW., Renton, Washington; or at the Office of the Federal Register, 800 North Capitol Street, NW., suite 700, Washington, DC.

FOR FURTHER INFORMATION CONTACT: Tim Dulin, Aerospace Engineer, International Branch, ANM–116, FAA,

Transport Airplane Directorate, 1601 Lind Avenue, SW., Renton, Washington 98055–4056; telephone (425) 227–2141; fax (425) 227–1149.

SUPPLEMENTARY INFORMATION: A proposal to amend part 39 of the Federal Aviation Regulations (14 CFR part 39) to include an airworthiness directive (AD) that is applicable to all Gulfstream Aerospace LP Model Astra SPX and 1125 Westwind Astra series airplanes was published in the **Federal Register** on July 9, 2002 (67 FR 45410). That action proposed to require revising the Airplane Flight Manual to advise the flightcrew to don oxygen masks as a first and immediate step following a cabin altitude alert.

Comments

Interested persons have been afforded an opportunity to participate in the making of this amendment. No comments were submitted in response to the proposal or the FAA's determination of the cost to the public.

Conclusion

The FAA has determined that air safety and the public interest require the adoption of the rule as proposed.

Cost Impact

The FAA estimates that 90 airplanes of U.S. registry will be affected by this AD, that it will take approximately 1 work hour per airplane to accomplish the required actions, and that the average labor rate is $60 per work hour. Based on these figures, the cost impact of the AD on U.S. operators is estimated to be $5,400 or $60 per airplane.

The cost impact figure discussed above is based on assumptions that no operator has yet accomplished any of the requirements of this AD action, and that no operator would accomplish those actions in the future if this AD were not adopted. The cost impact figures discussed in AD rulemaking actions represent only the time necessary to perform the specific actions actually required by the AD. These figures typically do not include incidental costs, such as the time required to gain access and close up, planning time, or time necessitated by other administrative actions.

Regulatory Impact

The regulations adopted herein will not have a substantial direct effect on the States, on the relationship between the national Government and the States, or on the distribution of power and responsibilities among the various levels of government. Therefore, it is determined that this final rule does not have federalism implications under Executive Order 13132.

For the reasons discussed above, I certify that this action (1) is not a ''significant regulatory action'' under Executive Order 12866; (2) is not a ''significant rule'' under DOT Regulatory Policies and Procedures (44 FR 11034, February 26, 1979); and (3) will not have a significant economic impact, positive or negative, on a substantial number of small entities under the criteria of the Regulatory Flexibility Act. A final evaluation has been prepared for this action and it is contained in the Rules Docket. A copy of it may be obtained from the Rules Docket at the location provided under the caption **ADDRESSES**.

List of Subjects in 14 CFR Part 39

Air transportation, Aircraft, Aviation safety, Incorporation by reference, Safety.

Adoption of the Amendment

Accordingly, pursuant to the authority delegated to me by the Administrator, the Federal Aviation Administration amends part 39 of the Federal Aviation Regulations (14 CFR part 39) as follows:

PART 39—AIRWORTHINESS DIRECTIVES

1. The authority citation for part 39 continues to read as follows:

Authority: 49 U.S.C. 106(g), 40113, 44701.

§ 39.13 [Amended]

2. Section 39.13 is amended by adding the following new airworthiness directive:

2002–20–06 Gulfstream Aerospace LP (Formerly Israel Aircraft Industries, Ltd.): Amendment 39–12902. Docket 2002–NM–114–AD.

Applicability: All Gulfstream Aerospace LP Model Astra SPX and 1125 Westwind Astra series airplanes, certificated in any category.

Compliance: Required as indicated, unless accomplished previously.

To prevent incapacitation of the flightcrew due to lack of oxygen, accomplish the following:

Revision of Airplane Flight Manual (AFM)

(a) Within 1 month after the effective date of this AD, revise the Emergency Procedures section of the FAA-approved AFM to include the following information; and operate the airplane in accordance with those procedures.

(1) For Model Astra SPX series airplanes: Include page II–2 of Israel Aircraft Industries Astra SPX AFM, Revision No. 17, dated July 25, 2000.

(2) For Model 1125 Westwind Astra series airplanes: Include Temporary Revision (TR) No. 12 of the Israel Aircraft Industries Astra AFM, dated October 18, 2001. This may be accomplished by inserting a copy of TR No. 12 into the AFM. When the TR has been incorporated into the general revisions of the AFM, the general revisions may be inserted into the AFM, provided the information contained in the general revisions is identical to that specified in TR No. 12.

Alternative Methods of Compliance

(b) An alternative method of compliance or adjustment of the compliance time that provides an acceptable level of safety may be used if approved by the Manager, International Branch, ANM–116, Transport Airplane Directorate, FAA. Operators shall submit their requests through an appropriate FAA Principal Operations Inspector, who may add comments and then send it to the Manager, International Branch, ANM–116.

Note 1: Information concerning the existence of approved alternative methods of compliance with this AD, if any, may be obtained from the International Branch, ANM–116.

Special Flight Permits

(c) Special flight permits may be issued in accordance with §§ 21.197 and 21.199 of the Federal Aviation Regulations (14 CFR 21.197 and 21.199) to operate the airplane to a location where the requirements of this AD can be accomplished.

Incorporation by Reference

(d) The actions required by this AD shall be accomplished in accordance with page II–2 of the Israel Aircraft Industries Astra SPX Airplane Flight Manual, Revision 17, dated July 25, 2000; and Temporary Revision 12, dated October 18, 2001, to the Israel Aircraft Industries Astra Airplane Flight Manual; as applicable. Israel Aircraft Industries Astra SPX Airplane Flight Manual, Revision No. 17, including page II–2, contains the following list of effective pages:

Page No.	Revision level shown on page	Date shown on page
Log of Effective Pages—Page xvii	17	July 25, 2000

This incorporation by reference was approved by the Director of the Federal Register in accordance with 5 U.S.C. 552(a) and 1 CFR part 51. Copies may be obtained from Gulfstream Aerospace Corporation, P.O. Box 2206, Mail Station D25, Savannah, Georgia 31402. Copies may be inspected at the FAA, Transport Airplane Directorate, 1601 Lind Avenue, SW., Renton, Washington; or at the Office of the Federal Register, 800 North Capitol Street, NW., suite 700, Washington, DC.

Note 2: The subject of this AD is addressed in Israeli airworthiness directive 21–00–11–18, dated November 27, 2000.

Effective Date

(e) This amendment becomes effective on January 31, 2003.

Issued in Renton, Washington, on December 16, 2002.

Ali Bahrami,

Acting Manager, Transport Airplane Directorate, Aircraft Certification Service.

[FR Doc. 02–32300 Filed 12–26–02; 8:45 am]

BILLING CODE 4910–13–P

DEPARTMENT OF TRANSPORTATION

Federal Aviation Administration

14 CFR Part 39

[Docket No. 92–ANE–56–AD; Amendment 39–12986; AD 2002–26–01]

RIN 2120–AA64

Airworthiness Directives; Textron Lycoming Division, AVCO Corporation Fuel Injected Reciprocating Engines.

AGENCY: Federal Aviation Administration, DOT.

ACTION: Final rule.

SUMMARY: This amendment supersedes two existing airworthiness directives (AD's), that are applicable to certain Textron Lycoming fuel injected reciprocating engines. These AD's currently require inspection, and replacement if necessary, of externally mounted fuel injector fuel lines. These amendments require adding engine series to the applicability that have been identified with the potential for the same problem and necessitate being included in the list of Textron Lycoming fuel injected reciprocating engine series. This amendment is prompted by the need to ensure that the additional Textron Lycoming fuel injected engine series listed in this final rule receive the same inspections as series covered by the current AD's. The actions specified by this AD are intended to prevent failure of the fuel injector fuel lines allowing fuel to spray into the engine compartment, resulting in an engine fire.

DATES: Effective January 31, 2003. The incorporation by reference of certain publications listed in the regulations is approved by the Director of the Federal Register as of January 31, 2003.

ADDRESSES: The service information referenced in this AD may be obtained from Textron Lycoming, 652 Oliver Street, Williamsport, PA 17701, telephone (570) 323–6181; fax (570) 327–7101. This information may be examined, by appointment, at the Federal Aviation Administration (FAA), New England Region, Office of the Regional Counsel, 12 New England Executive Park, Burlington, MA; or at the Office of the Federal Register, 800 North Capitol Street, NW, suite 700, Washington, DC.

FOR FURTHER INFORMATION CONTACT: Norm Perenson, Aerospace Engineer, New York Aircraft Certification Office, FAA, Engine and Propeller Directorate, 10 Fifth Street, 3rd floor, Valley Stream, NY 11581–1200; telephone (516) 256–7537; fax (516) 568–2716.

SUPPLEMENTARY INFORMATION: A proposal to amend part 39 of the Federal Aviation Regulations (14 CFR part 39) by superseding AD 93–02–05, Amendment 39–8487 (58 FR 26056, April 30, 1993), which is applicable to certain Textron Lycoming fuel injected reciprocating engines that currently require inspection, and replacement if necessary, of externally mounted fuel injector fuel lines, was published in the **Federal Register** on March 11, 2002 (67 FR 10859). Because of the requests of two commenters, this AD has been expanded and will also supersede AD 93–05–22, Amendment 39–8525, (58 FR 19768, April 16, 1993), which is only applicable to Lycoming TIO–540–S1AD. This dual supersedure will eliminate duplication and provide proper inspection and replacement instructions for the TIO–540–S1AD engines. The NPRM supersedure proposed to require that additional engine series that have been identified with the potential for the same problem, be included in the list of Textron Lycoming fuel injected reciprocating engine series listed in the AD applicability, in accordance with Textron Lycoming Mandatory Service Bulletin (MSB) No. 342D, dated July 10, 2001.

Comments

Interested persons have been afforded an opportunity to participate in the making of this amendment. Due consideration has been given to the comments received.

AD Not Necessary and Duplicates another AD

Two commenters point out that the current AD does not apply to the TIO–540–S1AD engines and the same unsafe condition in those engines is covered by a separate action, AD 93–05–22, Amendment 39–8525. The commenters request that either this action also supersede AD 93–05–22 or that this action not apply to the TIO–540–S1AD engines.

The FAA agrees. AD 93–05–22, Amendment 39–8525, is also superseded by this AD, and the TIO–540–S1AD engines have been included in the Applicability.

Clamps Installed On Factory Shipped Engines

One commenter states that engines shipped from the factory have all of the fuel line clamps installed, and no action is required until a maintenance action is performed in the field that disturbs the clamping. The commenter states that exempting engines shipped from the factory would avoid an unnecessary inspection after an engine has been delivered after purchase or overhaul.

The FAA disagrees. The current AD and this superseding AD already account for new and newly overhauled engines by allowing those engines 50 hours after the effective date before an initial inspection is required, as opposed to 10 hours for engines that have been maintained since new or since overhaul. The FAA has determined that inspections are necessary even before maintenance is performed to ensure that the fuel injector lines remain properly clamped. Therefore, the FAA made no changes to the rule with respect to this request. Engines shipped from the factory (new or overhauled) will have passed one or more inspections that will satisfy the requirements of this AD.

Engines That Have Been Previously Inspected

One commenter states that Textron Lycoming Mandatory Service Bulletin (MSB) No. 342D should also be included in the proposal's paragraph (a) listing after MSB No. 342C under the section titled ''Engines That Have Been Previously Inspected''. The commenter states there will be engines that have already been inspected to Textron Lycoming MSB No. 342D. This would allow an operator to take credit for a previously completed inspection.

The FAA agrees. Reference to Textron Lycoming MSB No. 342D has been added to paragraph (a) in the final rule.

Engines That Have Not Been Inspected

One commenter states that Textron Lycoming MSB No. 342D should also be included in the proposal's paragraph (b) listing after MSB No. 342C under the section titled ''Engines That Have Not Been Inspected''. The commenter states that there will be engines that have not been inspected to Textron Lycoming MSB No. 342D. This addition would allow a reference to the latest Service Bulletin.

The FAA agrees. Reference to Textron Lycoming MSB No. 342D has been added to paragraph (b) of the final rule.

Distances for Clamping Locations

One commenter states that since vibration seems to be a concern, there should be a distance provided from the engine case to the clamp on the push rod tube that would give maximum line vibration reduction to reduce the effects of engine vibration.

The FAA disagrees. While the FAA understands that vibration is a concern, the FAA does not agree that a change is required to the AD. The information to dampen the vibrations is contained in Textron Lycoming MSB No. 342D. No change has been made to this final rule.

Additional Items Installed on the Clamp

One commenter requests guidance relative to whether other items can be installed on the clamp around the push rod tube, and if not, a statement added that the clamp around the push rod tube must ''stand alone'' and only be used for the fuel line.

The FAA does not agree. Proper clamping procedures are contained in MSB No. 342D. No change has been made to the rule.

Service Bulletin Issue Dates Added

Service Bulletin (SB) issue dates were omitted in NPRM Docket No. 92–ANE–56–AD in the paragraphs entitled ''Engines That Have Been Previously Inspected'' and ''Engines That Have Not Been Inspected''. The SB issue dates are added to this AD in the paragraphs referenced above.

Difference Between Service Bulletin and AD Compliance Time

Textron Lycoming MSB No. 342D Time of Compliance statement states, ''Check every 100 hours,'' * * * This AD states, ''* * * at each 100-hour inspection * * *''. The 100-hour inspections may be extended to 110 hours provided the next inspection is performed at 90 hours. The requirements of this AD has precedence over Textron Lycoming MSB No. 342D.

After careful review of the available data, including the comments noted above, the FAA has determined that air safety and the public interest require the adoption of the rule with the changes described previously. The FAA has determined that these changes will neither increase the economic burden on any operator nor increase the scope of the AD.

Economic Analysis

There are approximately 4,160 Textron Lycoming engines of the affected design in the worldwide fleet. The FAA estimates that 2,496 engines installed on aircraft of U.S. registry will be affected by this AD, that it will take approximately 1 work hour to inspect and replace all lines on a four-cylinder engine, 1.5 work hours to inspect and replace all lines on a six-cylinder engine, and 2 hours to inspect and replace all lines on an eight-cylinder engine, and that the average labor rate is $60 per work hour. Required parts will cost approximately $440.00 for a four-cylinder engine, $660.00 for a six-cylinder engine, and $880.00 for an eight-cylinder engine. Based on these figures, the total cost per airplane of this AD on U.S. operators is estimated as follows:

- $500.00 for a four-cylinder engine.
- $750.00 for a six-cylinder engine.
- $1000.00 for an eight-cylinder engine.

Regulatory Analysis

This final rule does not have federalism implications, as defined in Executive Order 13132, because it would not have a substantial direct effect on the States, on the relationship between the national government and the States, or on the distribution of power and responsibilities among the various levels of government. Accordingly, the FAA has not consulted with state authorities prior to publication of this final rule.

For the reasons discussed above, I certify that this action (1) is not a ''significant regulatory action'' under Executive Order 12866; (2) is not a ''significant rule'' under the DOT Regulatory Policies and Procedures (44 FR 11034, February 26, 1979); and (3) will not have a significant economic impact, positive or negative, on a substantial number of small entities under the criteria of the Regulatory Flexibility Act. A final evaluation has been prepared for this action and it is contained in the Rules Docket. A copy of it may be obtained by contacting the Rules Docket at the location provided under the caption **ADDRESSES**.

List of Subjects in 14 CFR Part 39

Air transportation, Aircraft, Aviation safety, Incorporation by reference, Safety.

Adoption of the Amendment

Accordingly, pursuant to the authority delegated to me by the Administrator, the Federal Aviation Administration amends part 39 of the Federal Aviation Regulations (14 CFR part 39) as follows:

PART 39—AIRWORTHINESS DIRECTIVES

1. The authority citation for part 39 continues to read as follows:

Authority: 49 U.S.C. 106(g), 40113, 44701.

§ 39.13 [Amended]

2. Section 39.13 is amended by removing Amendment 39–8487 (58 FR 26056, April 30, 1993) and Amendment 39–8525 (58 FR 19768, April 16, 1993) and by adding a new airworthiness directive, Amendment 39–12986, to read as follows:

2002–26–01 **Textron Lycoming Division, AVCO Corporation:** Amendment 39–12986. Docket No. 92–ANE–56–AD. Supersedes AD 93–02–05, Amendment 39–8487 and AD 93–05–22, Amendment 39–8525.

Applicability: This airworthiness directive (AD) is applicable to Textron Lycoming fuel injected reciprocating engines incorporating externally mounted fuel injection lines as listed in the following Table 1:

TABLE 1.—ENGINE MODELS AFFECTED.

Engine	Model
AEIO–320	-D1B, -D2B, -E1B, -E2B
AIO–320	-A1B, -BIB, -C1B
IO–320	-B1A, -B1C, -C1A, -D1A, -D1B, -E1A, -E1B, -E2A, -E2B
LIO–320	-B1A, -C1A
AEIO–360	-A1A, -A1B, -A1B6, -A1D, -A1E, -A1E6, -B1F, -B2F, -B1G6, -B4A, -H1A, -H1B

TABLE 1.—ENGINE MODELS AFFECTED.—Continued

Engine	Model
AIO–360	-A1A, -A1B, -B1B
HIO–360	-A1A, -A1B, -B1A, -C1A, -C1B, -D1A, -E1AD, E1BD, -F1AD
IO–360	-A1A, -A1B, -A1B6, -A1B6D, -A1C, -A1D, -A1D6, -A2A, -A2B, -A3B6, -A3B6D, -B1B, -B1D, -B1E, -B1F, -B1G6, -B2F, -B2F6, -B4A, -C1A, -C1B, -C1C, -C1C6, -C1D6, -C1E6, -C1F, -C1G6, -C2G6, -J1A6D, -L2A, -M1A,
IVO–360	-A1A
LIO–360	-C1E6
TIO–360	-A1B, -C1A6D
IGO–480	-A1B6
AEIO–540	-D4A5, -D4B5, -D4D5, -L1B5, -L1B5D, -L1D5
IGO–540	-B1A, -B1C
IO–540	-A1A5, -AA1A5, -AA1B5, -AB1A5, -AC1A5, -B1A5, -B1C5, -C1B5, -C4B5, -C4D5D, -D4A5, -E1A5, -E1B5, -G1A5, -G1B5, -G1C5, -G1D5, -G1E5, -G1F5, -J4A5, -V4A5D, -K1A5, -KIA5D, -KIB5, -KIC5, -KID5, -K1E5, -K1E5D, -KIF5, -K1J5, -KIF5D, -K1G5, -K1G5D, -K1H5, -K1J5D, -K1K5, -K1E5, -K1E5D, -K1F5, -K1J5, -L1C5, -M1A5, -M1B5D, -N1A5, -P1A5, -R1A5, -S1A5, -T4A5D, -T4B5, -T4B5D, -T4C5D, -V4A5, -V4A5D, -W1A5D, -W3A5D
IVO–540	-A1A
LTIO–540	-F2BD, -J2B, -J2BD, -N2BD, -R2AD, -U2A, -V2AD, -W2A
TIO–540	-A1A, -A1B, -A2A, -A2B, -A2C, -AE2A, -AH1A, -AA1AD, -AF1A, -AF1B, -AG1A, -AB1AD, -AB1BD, -AH1A, -AJ1A, -AK1A, -C1A, -E1A, -G1A, -F2BD, -J2B, -J2BD, -N2BD, -R2AD, -S1AD, -U2A, -V2AD, -W2A
TIVO–540	-A2A
IO–720	-A1A, -A1B, -D1B, -D1BD, -D1C, -D1CD, -B1B, -B1BD, -C1B

Engine models in Table 1 are installed on, but not limited to Piper PA–24 Comanche, PA–30 and PA–39 Twin Comanche, PA–28 Arrow, and PA–23 Aztec; Beech 23 Musketeer; Mooney 20, and Cessna 177 Cardinal airplanes.

Note 1: This AD is applicable to engines with an ''I'' in the prefix of the model designation that have externally mounted fuel injection lines. This AD is not applicable to engines having internally mounted fuel injection lines, which are not accessible.

Note 2: This AD applies to each engine identified in the preceding applicability provision, regardless of whether it has been modified, altered, or repaired in the area subject to the requirements of this AD. For engines that have been modified, altered, or repaired so that the performance of the requirements of this AD is affected, the owner/operator must request approval for an alternative method of compliance in accordance with paragraph (d) of this AD. The request should include an assessment of the effect of the modification, alteration, or repair on the unsafe condition addressed by this AD; and, if the unsafe condition has not been eliminated, the request should include specific proposed actions to address it.

Compliance: Compliance with this AD is required as indicated, unless already done.

To prevent failure of the fuel injector fuel lines allowing fuel to spray into the engine compartment, resulting in an engine fire, do the following:

Engines That Have Been Previously Inspected

(a) For engines that have been inspected in accordance with Textron Lycoming Mandatory Service Bulletin (MSB) No. 342, dated March 24, 1972; Textron Lycoming MSB No. 342A, dated May 26, 1992 Textron Lycoming MSB No. 342B, dated October 22, 1993; Supplement No. 1 to MSB No. 342B, dated April 27, 1999; Textron Lycoming MSB No. 342C, dated April 28, 2000; and Textron Lycoming MSB No. 342D, dated July 10, 2001, inspect in accordance with paragraph (c) of this AD.

Engines That Have Not Been Inspected

(b) For engines that have not had initial inspections previously done in accordance with Textron Lycoming MSB No. 342, dated March 24, 1972; Textron Lycoming MSB No. 342A, dated May 26, 1992; Textron Lycoming MSB No. 342B, dated October 22, 1993; Supplement No. 1 to MSB No. 342B, dated April 27, 1999; Textron Lycoming MSB No. 342C, dated April 28, 2000; or Textron Lycoming MSB No. 342D, dated July 10, 2001, inspect in accordance with Textron Lycoming MSB No. 342D, dated July 10, 2001 as follows:

(1) For engines that have not yet had any fuel line maintenance done, or have not had any fuel line maintenance done since new or since the last overhaul, inspect within 50 hours time-in-service after the effective date of this AD, and replace as necessary, the fuel injector fuel lines and clamps between the fuel manifold and the fuel injector nozzles that do not meet all conditions specified in Textron Lycoming MSB No. 342D, dated July 10, 2001.

(2) For all other engines, inspect within 10 hours time-in-service after the effective date of this AD, and replace as necessary, the fuel injector fuel lines and clamps between the fuel manifold and the fuel injector nozzles that do not meet all conditions specified in Textron Lycoming MSB No. 342D, dated July 10, 2001.

Repetitive Inspections

(c) Thereafter, at each annual inspection, at each 100-hour inspection, at each engine overhaul, and after any maintenance has been done on the engine where any clamp (or clamps) on a fuel injector line (or lines) has been disconnected, moved, or loosened, inspect the fuel injector fuel lines and clamps and replace as necessary any fuel injector fuel line and clamp that does not meet all conditions specified in Textron Lycoming MSB No. 342D, dated July 10, 2001.

Alternative Methods of Compliance

(d) An alternative method of compliance or adjustment of the compliance time that provides an acceptable level of safety may be used if approved by the Manager, New York Aircraft Certification Office (ACO). Operators must submit their request through an appropriate FAA Principal Maintenance Inspector, who may add comments and then send it to the Manager, New York ACO.

Note 3: Information concerning the existence of approved alternative methods of compliance with this airworthiness directive, if any, may be obtained from the New York ACO.

Special Flight Permits

(e) Special flight permits may be issued in accordance with §§ 21.197 and 21.199 of the Federal Aviation Regulations (14 CFR 21.197 and 21.199) to operate the airplane to a location where the requirements of this AD can be done.

Documents That Have Been Incorporated By Reference

(f) The clamp inspection and installations must be done in accordance with Textron Lycoming MSB No. 342D, dated July 10, 2001. This incorporation by reference was approved by the Director of the Federal Register in accordance with 5 U.S.C. 552(a) and 1 CFR part 51. Copies may be obtained from Textron Lycoming, 652 Oliver Street, Williamsport, PA 17701, telephone (570) 323–6181. Copies may be inspected at the FAA, New England Region, Office of the Regional Counsel, 12 New England Executive Park, Burlington, MA; or at the Office of the Federal Register, 800 North Capitol Street, NW, suite 700, Washington, DC.

Effective Date

(g) This amendment becomes effective on January 31, 2003.

Issued in Burlington, Massachusetts, on December 16, 2002.

Jay J. Pardee,

Manager, Engine and Propeller Directorate, Aircraft Certification Service.

[FR Doc. 02–32339 Filed 12–26–02; 8:45 am]

BILLING CODE 4910–13–P

DEPARTMENT OF TRANSPORTATION

Federal Aviation Administration

14 CFR Part 39

[Docket No. 2002–CE–38–AD; Amendment 39–12988; AD 2002–26–03]

RIN 2120–AA64

Airworthiness Directives; Brackett Aircraft Company, Brackett Single Screen Air Filter

AGENCY: Federal Aviation Administration, DOT.

ACTION: Final rule.

SUMMARY: This amendment adopts a new airworthiness directive (AD) that applies to Brackett Aircraft Company (Brackett) single screen air filter assemblies that are installed on airplanes. This AD requires you to check the Brackett single screen air filter assembly for correct installation. This AD also requires you to install an additional screen, replace the Brackett single screen air filter assembly with a double screen filter, or replace with another approved design filter at a specified time. This AD is the result of several reports of service difficulties of incorrect installation of the air filters. The actions specified by this AD are intended to detect and correct incorrect installation of the air filter, which could result in failure of the air filter. Such failure could lead to engine/turbocharger ingestion of the air filter foam element.

DATES: This AD becomes effective on February 18, 2003.

ADDRESSES: You may get the service information referenced in this AD from Brackett Aircraft Company, 7052 Government Way, Kingman, Arizona 86401; telephone: (928) 757–4009; facsimile: (928) 757–4433. You may view this information at the Federal Aviation Administration (FAA), Central Region, Office of the Regional Counsel, Attention: Rules Docket No. 2002–CE–38–AD, 901 Locust, Room 506, Kansas City, Missouri 64106.

FOR FURTHER INFORMATION CONTACT: Roger Pesuit, Aerospace Engineer, FAA, Los Angeles Aircraft Certification Office, 3960 Paramount Boulevard; telephone: (562) 627–5251; facsimile: (562) 627–5210.

SUPPLEMENTARY INFORMATION:

Discussion

What Events Have Caused This AD?

The FAA has received several reports of service difficulties of incorrect installation of the Brackett single screen air filters on Cessna 206 and 210 series airplanes that incorporate Supplemental Type Certificate (STC) No. SA71GL. A safety recommendation was issued by FAA that recommended corrective action as a result of a fatal accident involving a Cessna Model T210N airplane.

Investigation of this accident revealed that the air filter assembly had been installed with the screen incorrectly positioned on the upstream side of the frame. Incorrect installation of the air filter assembly resulted in portions of the air filter foam element entering the turbocharger compressor inlet.

The NTSB determined this to be the cause of the reported power loss. The manufacturer has developed a double screen air filter that precludes incorrect air filter installation.

What Is the Potential Impact if FAA Took No Action?

If not detected and corrected, the air filter foam element could be ingested into the engine/turbocharger compressor. This condition could lead to loss of power during a critical phase of flight.

Has FAA Taken Any Action to This Point?

We issued a proposal to amend part 39 of the Federal Aviation Regulations (14 CFR part 39) to include an AD that would apply to Brackett single screen air filter assemblies that are installed on airplanes. This proposal was published in the **Federal Register** as a notice of proposed rulemaking (NPRM) on October 25, 2002 (67 FR 65517). The NPRM proposed to require you to visually or by touch check the Brackett single screen air filter assembly for correct installation. This proposed AD would also require you to add a second screen, replace the Brackett single screen air filter with a double screen filter, or replace with another approved design filter at a specified time.

Was the Public Invited to Comment?

The FAA encouraged interested persons to participate in the making of this amendment. We did not receive any comments on the proposed rule or on our determination of the cost to the public.

FAA's Determination

What Is FAA's Final Determination on This Issue?

After careful review of all available information related to the subject presented above, we have determined that air safety and the public interest require the adoption of the rule as proposed except for minor editorial corrections. We have determined that these minor corrections:

—Provide the intent that was proposed in the NPRM for correcting the unsafe condition; and

—Do not add any additional burden upon the public than was already proposed in the NPRM.

Cost Impact

How Many Airplanes Does This AD Impact?

We estimate that this AD affects 2,000 airplanes in the U.S. registry.

What Is the Cost Impact of This AD on Owners/Operators of the Affected Airplanes?

We estimate the following costs to accomplish the replacements:

Labor cost	Parts cost	Total cost per airplane	Total cost on U.S. operators
1 workhour × $60 = $60	$44	$104	$104 × 2,000 = $208,000

Regulatory Impact

Does This AD Impact Various Entities?

The regulations adopted herein will not have a substantial direct effect on the States, on the relationship between the national government and the States, or on the distribution of power and responsibilities among the various levels of government. Therefore, it is determined that this final rule does not have federalism implications under Executive Order 13132.

Does This AD Involve a Significant Rule or Regulatory Action?

For the reasons discussed above, I certify that this action (1) is not a ''significant regulatory action'' under Executive Order 12866; (2) is not a ''significant rule'' under DOT Regulatory Policies and Procedures (44 FR 11034, February 26, 1979); and (3) will not have a significant economic impact, positive or negative, on a substantial number of small entities under the criteria of the Regulatory Flexibility Act. A copy of the final evaluation prepared for this action is contained in the Rules Docket. A copy of it may be obtained by contacting the Rules Docket at the location provided under the caption **ADDRESSES**.

List of Subjects in 14 CFR Part 39

Air transportation, Aircraft, Aviation safety, Safety.

Adoption of the Amendment

Accordingly, under the authority delegated to me by the Administrator, the Federal Aviation Administration amends part 39 of the Federal Aviation Regulations (14 CFR part 39) as follows:

PART 39—AIRWORTHINESS DIRECTIVES

1. The authority citation for part 39 continues to read as follows:

Authority: 49 U.S.C. 106(g), 40113, 44701.

§ 39.13 [Amended]

2. FAA amends § 39.13 by adding a new AD to read as follows:

2002–26–03 Brackett Aircraft Company: Amendment 39–12988; Docket No. 2002–CE–38–AD.

(a) *What airplanes are affected by this AD?* This AD affects Brackett single screen air filter assemblies, part number BA–2410, that are installed on, but not limited to, the following aircraft that are certificated in any category and incorporate Supplemental Type Certificate (STC) No. SA71GL:

Cessna Model	Serial Nos.
TP206A, TP206B, TP206C, TP206D, TP206E, TU206A, TU206B, TU206C, TU206D, TU206E, TU206F, TU206G and T207A.	All serial numbers.
210	All equipped with air conditioning.
T210F, T210G, T210H, T210J, T210K, T210L, T210M, T210N, 210R, and T210R.	All serial numbers.

(b) *Who must comply with this AD?* Anyone who wishes to operate an aircraft equipped with one of the affected single screen air filters must comply with this AD.

(c) *What problem does this AD address?* The actions specified by this AD are intended to detect and correct incorrect installation of the air filter, which could result in failure of the air filter. Such failure could lead to engine/turbocharger ingestion of the air filter foam element.

(d) *What actions must I accomplish to address this problem?* To address this problem, you must accomplish the following:

Actions	Compliance	Procedures
(1) Visually or by touch check the single screen Brackett air filter assembly (part number (P/N) BA–2410) to ensure that it is installed with the screen on the down stream side of the filter assembly. Accomplish the following: (i) Remove both upper engine cowlings (ii) Open the alternate air access door located on the right side of the engine compartment by applying pressure (iii) While viewing through the alternate air access door, use an inspection mirror and light to check that the screen is installed on the down stream side of the filter assembly; OR (iv) Partially insert a hand into the open alternate air access door and touch the back of the filter element, feeling for the presence of the screen or absence of the screen	Within the next 25 hours time in service (TIS) after February 18, 2003 (the effective date of this AD).	The owner/operator holding at least a private pilot certificate as authorized by section 43.7 of the Federal Aviation Regulations (14 CFR 43.7) may accomplish the visual or touch check of this AD. Make an entry into the aircraft records showing compliance with these portions of the AD in accordance with section 43.9 of the Federal Aviation Regulations (14 CFR 43.9).
(2) Verify that the BA–2410 air filter assembly has screens on both sides. Install an additional screen P/N 2404–00 on the BA–2410 air filter assembly if it is not already equipped with screens on both sides. Alternatively, replace the single screen Brackett air filter assembly, P/N BA–2410, with an FAA-approved filter that is not Brackett P/N BA–2410.	*If the air filter assembly is installed incorrectly:* Prior to further flight after the visual or by touch check required by paragraph (d)(1) of this AD. *If the air filter is installed correctly:* Within the next 100 hours TIS after February 18, 2003 (the effective date of this AD).	In accordance with the applicable airplane maintenance instructions. The owner/operator may not accomplish the replacement/modification, unless he/she holds the proper mechanic authorization.
(3) You may accomplish the replacement required by this AD instead of the check specified in paragraph (d)(1) of this AD.	Within the next 25 hours TIS after February 18, 2003 (the effective date of this AD).	In accordance with the applicable or STC supplied maintenance instructions.
(4) Do not install, on any affected airplane, any single screen Brackett air filter assembly, P/N BA–2410.	As of February 18, 2003 (the effective date of this AD).	Not Applicable.

Note 1: Corrective action, if required, must be accomplished by appropriately rated maintenance personnel. The owner/operator may not accomplish the replacement/modification, unless he/she holds the proper mechanic authorization.

Note 2: The compliance time of 100 hours TIS for replacement is based on FAA Safety Recommendation, Control Number 02.122,

that recommends modifying to a dual screen configuration at 100 hours TIS.

(e) *Can I comply with this AD in any other way?* You may use an alternative method of compliance or adjust the compliance time if:

(1) Your alternative method of compliance provides an equivalent level of safety; and

(2) The Manager, Los Angeles Aircraft Certification Office (ACO), approves your alternative. Submit your request through an FAA Principal Maintenance Inspector, who may add comments and then send it to the Manager, Los Angeles ACO.

Note 3: This AD applies to each airplane identified in paragraph (a) of this AD, regardless of whether it has been modified, altered, or repaired in the area subject to the requirements of this AD. For airplanes that have been modified, altered, or repaired so that the performance of the requirements of this AD is affected, the owner/operator must request approval for an alternative method of compliance in accordance with paragraph (e) of this AD. The request should include an assessment of the effect of the modification, alteration, or repair on the unsafe condition addressed by this AD; and, if you have not eliminated the unsafe condition, specific actions you propose to address it.

(f) *Where can I get information about any already-approved alternative methods of compliance?* Contact Roger Pesuit, Aerospace Engineer, FAA, Los Angeles Aircraft Certification Office, 3960 Paramount Boulevard; telephone: (562) 627–5251; facsimile: (562) 627–5210.

(g) *What if I need to fly the airplane to another location to comply with this AD?* The FAA can issue a special flight permit under §§ 21.197 and 21.199 of the Federal Aviation Regulations (14 CFR 21.197 and 21.199) to operate your airplane to a location where you can accomplish the requirements of this AD.

(h) *How do I get copies of the documents referenced in this AD?* You may get copies of the documents referenced in this AD from Brackett Aircraft Company, 7052 Government Way, Kingman, Arizona 86401; telephone: (928) 757–4009; facsimile: (928) 757–4433. You may view these documents at FAA, Central Region, Office of the Regional Counsel, 901 Locust, Room 506, Kansas City, Missouri 64106.

(i) *When does this amendment become effective?* This amendment becomes effective on February 18, 2003.

Issued in Kansas City, Missouri, on December 18, 2002.

Michael Gallagher,

Manager, Small Airplane Directorate, Aircraft Certification Service.

[FR Doc. 02–32510 Filed 12–26–02; 8:45 am]

BILLING CODE 4910–13–P

DEPARTMENT OF TRANSPORTATION

Federal Aviation Administration

14 CFR Part 95

Standard Instrument Approach Procedures

CFR Correction

In Title 14 of the Code of Federal Regulations, parts 60 to 139, revised as of January 1, 2002, on page 300, in § 95.17, paragraph (b)(5) is corrected by removing 39° and adding in its place 69°.

[FR Doc. 02–55526 Filed 12–26–02; 8:45 am]

BILLING CODE 1505–01–D

DEPARTMENT OF TRANSPORTATION

Federal Aviation Administration

14 CFR Parts 121, 125, 135, and 145

[Docket No. FAA–2000–7952]

RIN 2120–AH91

Service Difficulty Reports

AGENCY: Federal Aviation Administration, DOT.

ACTION: Final rule; delay of effective date.

SUMMARY: The Federal Aviation Administration (FAA) is further delaying the effective date of a final rule that amends the reporting requirements for air carriers and certificated domestic and foreign repair station operators concerning failures, malfunctions, and defects of aircraft, aircraft engines, systems, and components. This action is prompted by the FAA's decision to issue a proposal to address industry concerns about the final rule. Delaying the effective date of the final rule will allow the agency time for further consideration of industry concerns and completion of the notice of proposed rulemaking (NPRM) process.

DATES: The effective date of the rule amending 14 CFR parts 121, 125, 135, and 145 published at 66 FR 558912, November 23, 2001, is delayed from January 16, 2003 until January 16, 2004.

FOR FURTHER INFORMATION CONTACT: Jose E. Figueroa, Flight Standards Service, Tampa Flight Standards District Office, 5601 Mariner Street, Suite 310, Tampa, Florida, 33609–3413, telephone 813–639–1540.

SUPPLEMENTARY INFORMATION:

Background

On September 15, 2000, the FAA requested comments on the information collection requirements on the final rule entitled ''Service Difficulty Reports'' (65 FR 56191). That final rule, which had an effective date of January 16, 2001, amended the reporting requirements for air carriers and certificated domestic and foreign repair station operators concerning failures, malfunctions, and defects of aircraft, aircraft engines, systems, and components. The FAA received extensive written comments on the Service Difficulty Reporting (SDR) requirements and on the potential duplicate reporting of certain failures, malfunctions, and defects. On November 30, 2000, the FAA announced (65 FR 71247) that a public meeting on this rulemaking would be held on December 11, 2000. Participants at that meeting raised novel issues that the FAA was not aware of when preparing the final rule.

As a result of the concerns expressed at the meeting and those raised during the comment period for the final rule (published September 15, 2000), the FAA delayed the effective date of the final rule in three subsequent notices. The first notice (65 FR 80743) was published on December 22, 2000, the second notice (66 FR 21626) was published on April 30, 2001, and the third notice (66 FR 58912) was published on November 23, 2001. The purpose of these delays was to allow the agency time to consider industry's concerns and also to issue a notice of proposed rulemaking (NPRM). The FAA will issue an NPRM to address the issues raised and to give the aviation industry and the general public the opportunity to comment on the agency's proposed revisions to the final rule. The FAA is looking at the collection and analysis of SDR data through other information management systems that may provide valuable safety information. For example, the Commercial Airplane Certification Process Study is a significant collaborative effort between the FAA and industry to improve the certification and operation of air carrier aircraft. Aviation safety data identification and collection are a major component of this effort. To allow time to proceed with this process, the FAA further extends the effective date of the final rule until January 16, 2004. The FAA cautions the industry that the existing rules will remain in effect until the new effective date.

Since the delay in the effective date of the final rule does not impose any new requirements or any additional burden on the regulated public, the FAA finds that good cause exists for immediate adoption of the new effective date without a 30-day notice.

Issued in Washington DC on December 20, 2002.

Marion Blakey,

Administrator.

[FR Doc. 02–32715 Filed 12–23–02; 4:19 pm]

BILLING CODE 4910–13–P

DEPARTMENT OF HEALTH AND HUMAN SERVICES

Food and Drug Administration

21 CFR Part 520

New Animal Drugs; Neomycin Sulfate Soluble Powder

AGENCY: Food and Drug Administration, HHS.

ACTION: Final rule.

SUMMARY: The Food and Drug Administration (FDA) is amending the animal drug regulations to reflect approval of a supplemental abbreviated new animal drug application (ANADA) filed by Alpharma, Inc. The supplemental ANADA provides for use of neomycin sulfate soluble powder in the drinking water of growing turkeys for the control of mortality associated with *Escherichia coli* organisms susceptible to neomycin.

DATES: This rule is effective December 27, 2002.

FOR FURTHER INFORMATION CONTACT: Lonnie W. Luther, Center for Veterinary Medicine (HFV–104), Food and Drug Administration, 7519 Standish Pl., Rockville, MD 20855, 301–827–8549, e-mail: lluther@cvm.fda.gov.

SUPPLEMENTARY INFORMATION: Alpharma, Inc., One Executive Dr., P.O. Box 1399, Fort Lee, NJ 07024, filed a supplement to ANADA 200–130 that provides for use of NEO–SOL 50 (neomycin sulfate) soluble powder for making medicated drinking water for administration to cattle (excluding veal calves), swine, sheep, and goats for the treatment and control of colibacillosis (bacterial enteritis) caused by *E. coli* susceptible to neomycin. The supplemental ANADA provides for use of neomycin in the drinking water of growing turkeys for the control of mortality associated with *E. coli* organisms susceptible to neomycin. The supplemental application is approved as of October 25, 2002, and the regulations are amended in 21 CFR 520.1484 to reflect the approval. The basis of approval is discussed in the freedom of information summary.

In accordance with the freedom of information provisions of 21 CFR part 20 and 21 CFR 514.11(e)(2)(ii), a summary of safety and effectiveness data and information submitted to support approval of this application may be seen in the Dockets Management Branch (HFA–305), Food and Drug Administration, 5630 Fishers Lane, rm. 1061, Rockville, MD 20852, between 9 a.m. and 4 p.m., Monday through Friday.

The agency has determined under 21 CFR 25.33(a)(1) that this action is of a type that does not individually or cumulatively have a significant effect on the human environment. Therefore, neither an environmental assessment nor an environmental impact statement is required.

This rule does not meet the definition of ''rule'' in 5 U.S.C. 804(3)(A) because it is a rule of ''particular applicability.'' Therefore, it is not subject to the congressional review requirements in 5 U.S.C. 801–808.

List of Subjects in 21 CFR Part 520

Animal drugs.

Therefore, under the Federal Food, Drug, and Cosmetic Act and under authority delegated to the Commissioner of Food and Drugs and redelegated to the Center for Veterinary Medicine, 21 CFR part 520 is amended as follows:

PART 520—ORAL DOSAGE FORM NEW ANIMAL DRUGS

1. The authority citation for 21 CFR part 520 continues to read as follows:

Authority: 21 U.S.C. 360b.

§ 520.1484 [Amended]

2. Section 520.1484 *Neomycin sulfate soluble powder* is amended in paragraph (b)(1) by removing ''046573'' and in paragraph (b)(2) by adding in numerical sequence ''046573''.

Dated: December 17, 2002.

Steven D. Vaughn,

Director, Office of New Animal Drug Evaluation, Center for Veterinary Medicine.

[FR Doc. 02–32748 Filed 12–26–02; 8:45 am]

BILLING CODE 4160–01–S

DEPARTMENT OF HEALTH AND HUMAN SERVICES

Food and Drug Administration

21 CFR Part 522

Implantation or Injectable Dosage Form New Animal Drugs; Trenbolone Acetate and Estradiol Benzoate

AGENCY: Food and Drug Administration, HHS.

ACTION: Final rule.

SUMMARY: The Food and Drug Administration (FDA) is amending the animal drug regulations to reflect approval of a supplemental new animal drug application (NADA) filed by Fort Dodge Animal Health. The supplemental NADA provides for use of an implant containing 100 milligrams (mg) trenbolone acetate and 14 mg estradiol benzoate for increased rate of weight gain in steers fed in confinement for slaughter.

DATES: This rule is effective December 27, 2002.

FOR FURTHER INFORMATION CONTACT: Daniel A. Benz, Center for Veterinary Medicine (HFV–126), Food and Drug Administration, 7500 Standish Pl., Rockville, MD 20855, 301–827–0223, e-mail: dbenz@cvm.fda.gov.

SUPPLEMENTARY INFORMATION: Fort Dodge Animal Health, Division of Wyeth, 800 Fifth St. NW., Fort Dodge, IA 50501, filed a supplement to NADA 141–043 for SYNOVEX (trenbolone acetate and estradiol benzoate) implants. The supplemental NADA provides for use of SYNOVEX Choice, an implant containing 100 mg trenbolone acetate and 14 mg estradiol benzoate, for increased rate of weight gain in steers fed in confinement for slaughter. The supplemental NADA is approved as of October 3, 2002, and the regulations are amended in 21 CFR 522.2478 to reflect the approval. The basis of approval is discussed in the freedom of information summary.

In accordance with the freedom of information provisions of 21 CFR part 20 and § 514.11(e)(2)(ii), a summary of safety and effectiveness data and information submitted to support approval of this supplemental application may be seen in the Dockets Management Branch (HFA–305), Food and Drug Administration, 5630 Fishers Lane, rm. 1061, Rockville, MD 20852, between 9 a.m. and 4 p.m., Monday through Friday.

Under section 512(c)(2)(F)(iii) of the Federal Food, Drug, and Cosmetic Act (21 U.S.C. 360b(c)(2)(F)(iii)), this supplemental approval qualifies for 3 years of marketing exclusivity beginning October 3, 2002.

The agency has determined under 21 CFR 25.33(a)(1) that this action is of a type that does not individually or cumulatively have a significant effect on the human environment. Therefore, neither an environmental assessment nor an environmental impact statement is required.

This rule does not meet the definition of ''rule'' in 5 U.S.C. 804(3)(A) because it is a rule of ''particular applicability.'' Therefore, it is not subject to the congressional review requirements in 5 U.S.C. 801–808.

List of Subjects in 21 CFR Part 522

Animal drugs.

Therefore, under the Federal Food, Drug, and Cosmetic Act and under authority delegated to the Commissioner of Food and Drugs and redelegated to the Center for Veterinary Medicine, 21 CFR part 522 is amended as follows:

PART 522—IMPLANTATION OR INJECTABLE DOSAGE FORM NEW ANIMAL DRUGS

1. The authority citation for 21 CFR part 522 continues to read as follows:

Authority: 21 U.S.C. 360b.

2. Section 522.2478 is revised to read as follows:

§ 522.2478 Trenbolone acetate and estradiol benzoate.

(a) *Specifications*. Each implant dose consists of:

(1) 8 pellets, each pellet containing 25 milligrams (mg) trenbolone acetate and 3.5 mg estradiol benzoate.

(2) 4 pellets, each pellet containing 25 mg trenbolone acetate and 3.5 mg estradiol benzoate.

(b) *Sponsor*. See No. 000856 in § 510.600(c) of this chapter.

(c) *Related tolerances*. See §§ 556.240 and 556.739 of this chapter.

(d) *Conditions of use*—(1) *Steers fed in confinement for slaughter*. (i) For an implant as described in paragraph (a)(1) of this section:

(A) *Amount*. 200 mg trenbolone acetate and 28 mg estradiol benzoate.

(B) *Indications for use*. For increased rate of weight gain and improved feed efficiency.

(C) *Limitations*. Implant subcutaneously in ear only.

(ii) For an implant as described in paragraph (a)(2) of this section:

(A) *Amount*. 100 mg trenbolone acetate and 14 mg estradiol benzoate.

(B) *Indications for use*. For increased rate of weight gain.

(C) *Limitations*. Implant subcutaneously in ear only.

(2) *Heifers fed in confinement for slaughter*—(i) *Amount*. 200 mg trenbolone acetate and 28 mg estradiol benzoate (as described in paragraph (a)(1) of this section).

(ii) *Indications for use*. For increased rate of weight gain.

(iii) *Limitations*. Implant subcutaneously in ear only. Not for dairy or beef replacement heifers.

Dated: December 17, 2002.

Steven D. Vaughn,

Director, Office of New Animal Drug Evaluation, Center for Veterinary Medicine.

[FR Doc. 02–32750 Filed 12–26–02; 8:45 am]

BILLING CODE 4160–01–S

DEPARTMENT OF HEALTH AND HUMAN SERVICES

Food and Drug Administration

21 CFR Parts 522 and 556

Implantation or Injectable Dosage Form New Animal Drugs; Danofloxacin

AGENCY: Food and Drug Administration, HHS.

ACTION: Final rule.

SUMMARY: The Food and Drug Administration (FDA) is amending the animal drug regulations to reflect approval of a new animal drug application (NADA) filed by Pfizer, Inc. The NADA provides for the veterinary prescription use of danofloxacin solution in cattle, by subcutaneous injection, for treatment of bovine respiratory disease associated with *Mannheimia (Pasteurella) haemolytica* and *Pasteurella multocida*. FDA is also amending the regulations to add the acceptable daily intake for total residues of danofloxacin and tolerances for residues of danofloxacin in edible tissues of cattle.

DATES: This rule is effective December 27, 2002.

FOR FURTHER INFORMATION CONTACT: Thomas Letonja, Center for Veterinary Medicine (HFV–130), Food and Drug Administration, 7500 Standish Pl., Rockville, MD 20855; 301–827–7576, e-mail: tletonja@cvm.fda.gov.

SUPPLEMENTARY INFORMATION: Pfizer, Inc., 235 East 42d St., New York, NY 10017–5755, filed NADA 141–207 for A180 (danofloxacin mesylate) Injectable Solution. The NADA provides for the veterinary prescription use of danofloxacin solution in cattle, by subcutaneous injection, for treatment of bovine respiratory disease associated with *Mannheimia (Pasteurella) haemolytica* and *Pasteurella multocida*. The application is approved as of September 20, 2002, and the regulations are amended in 21 CFR part 522 by adding new § 522.522 and in 21 CFR part 556 by adding new § 556.169 to reflect the approval. The basis of approval is discussed in the freedom of information summary.

In accordance with the freedom of information provisions of 21 CFR part 20 and 514.11(e)(2)(ii), a summary of safety and effectiveness data and information submitted to support approval of this application may be seen in the Dockets Management Branch (HFA–305), Food and Drug Administration, 5630 Fishers Lane, rm. 1061, Rockville, MD 20852, between 9 a.m. and 4 p.m., Monday through Friday.

Under section 512(c)(2)(F)(i) of the Federal Food, Drug, and Cosmetics Act (21 U.S.C. 360b(c)(2)(F)(i)), this approval qualifies for 5 years of marketing exclusivity beginning September 20, 2002.

The agency has carefully considered the potential environmental impact of this action and has concluded that the action will not have a significant impact on the human environment and that an environmental impact statement is not required. FDA's finding of no significant impact and the evidence supporting that finding, contained in an environmental assessment, may be seen in the Dockets Management Branch (see **ADDRESSES**) between 9 a.m. and 4 p.m., Monday through Friday.

This rule does not meet the definition of ''rule'' in 5 U.S.C. 804(3)(A) because it is a rule of ''particular applicability.'' Therefore, it is not subject to the congressional review requirements in 5 U.S.C. 801–808.

List of Subjects

21 CFR Part 522

Animal drugs.

21 CFR Part 556

Animal drugs, Foods.

Therefore, under the Federal Food, Drug, and Cosmetic Act and under authority delegated to the Commissioner of Food and Drugs and redelegated to the Center for Veterinary Medicine, 21 CFR parts 522 and 556 are amended as follows:

PART 522—IMPLANTATION OR INJECTABLE DOSAGE FORM NEW ANIMAL DRUGS

1. The authority citation for 21 CFR part 522 continues to read as follows:

Authority: 21 U.S.C. 360b.

2. Section 522.522 is added to read as follows:

§ 522.522 Danofloxacin.

(a) *Specifications*. Each milliliter of solution contains 180 milligrams (mg) danofloxacin as the mesylate salt.

(b) *Sponsor*. See No. 000069 in § 510.600(c) of this chapter.

(c) *Related tolerances*. See § 556.169 of this chapter.

(d) *Conditions of use in cattle*—(1) *Amount*. 6 mg per kilogram of body weight by subcutaneous injection. Treatment should be repeated approximately 48 hours following the first injection.

(2) *Indications for use*. For the treatment of bovine respiratory disease (BRD) associated with *Mannheimia*

(Pasteurella) haemolytica and *Pasteurella multocida*.

(3) *Limitations*. Animals intended for human consumption should not be slaughtered within 4 days from the last treatment. Do not use in cattle intended for dairy production. A withdrawal period has not been established for this product in pre-ruminating calves. Do not use in calves to be processed for veal. Federal law restricts this drug to use by or on the order of a licensed veterinarian. Federal law prohibits the extra-label use of this drug in food-producing animals.

PART 556—TOLERANCES FOR RESIDUES OF NEW ANIMAL DRUGS IN FOOD

3. The authority citation for 21 CFR part 556 continues to read as follows:

Authority: 21 U.S.C. 342, 360b, 371.

4. Section 556.169 is added to read as follows:

§ 556.169 Danofloxacin.

(a) *Acceptable daily intake (ADI)*. The ADI for total residues of danofloxacin is 2.4 micrograms per kilogram of body weight per day.

(b) *Tolerances*—(1) *Cattle*—(i) *Liver (the target tissue)*. The tolerance for parent danofloxacin (the marker residue) is 0.2 part per million (ppm).

(ii) *Muscle*. The tolerance for parent danofloxacin (the marker residue) is 0.2 ppm.

(2) [Reserved].

Dated: December 17, 2002.

Stephen F. Sundlof,

Director, Center for Veterinary Medicine.

[FR Doc. 02–32747 Filed 12–26–02; 8:45 am]

BILLING CODE 4160–01–S

DEPARTMENT OF THE TREASURY

Office of Foreign Assets Control

31 CFR Parts 585 and 586

Unblocking of Assets; Federal Republic of Yugoslavia (Serbia & Montenegro) and Bosnian Serb-Controlled Areas of the Republic of Bosnia and Herzegovina Sanctions Regulations; Federal Republic of Yugoslavia (Serbia & Montenegro) Kosovo Sanctions Regulations

AGENCY: Office of Foreign Assets Control, Treasury.

ACTION: Final rule.

SUMMARY: The Office of Foreign Assets Control (''OFAC'') of the U.S. Department of Treasury is issuing general licenses, to be effective February 25, 2003, unblocking certain property and interests in property presently blocked pursuant to the Federal Republic of Yugoslavia (Serbia & Montenegro) and Bosnian Serb-controlled areas of the Republic of Bosnia and Herzegovina Sanctions Regulations set forth at 31 CFR part 585 and the Federal Republic of Yugoslavia (Serbia & Montenegro) Kosovo Sanctions Regulations set forth at 31 CFR part 586. The general licenses effecting the unblocking under both of the above sets of regulations will not apply to property or interests in property of those persons who are presently subject to sanctions under either the Federal Republic of Yugoslavia (Serbia & Montenegro) Milosevic Regulations set forth at 31 CFR part 587 or the Western Balkans Transactions Regulations set forth at 31 CFR part 588, or who are otherwise subject to sanctions under other parts of 31 CFR chapter V. In addition, the general license effecting the unblocking under 31 CFR part 585 will not apply to property or interests in property of diplomatic and/or consular missions of the former Socialist Federal Republic of Yugoslavia or to the blocked property or interests in property of the National Bank of Yugoslavia subject to part 585. In order to allow for claims and encumbrances associated with the property and interests in property being unblocked to be addressed, OFAC is also issuing general licenses, effective December 27, 2002, authorizing any person or government to seek judicial or other legal protection of any rights they may have with respect to the property and interests in property being unblocked.

DATES: Effective Date: December 27, 2002.

Applicable Dates: The general licenses set forth in 31 CFR §§ 585.529(a) and 586.520(a) shall become applicable February 25, 2003. The general licenses set forth in 31 CFR 585.529(b) and 586.520(b) shall become applicable December 27, 2002.

FOR FURTHER INFORMATION CONTACT: Chief of Compliance Programs, tel.: 202/622–2490, Chief of Licensing, tel.: 202/622–2480, Chief of Policy Planning and Program Management, tel.: 202/622–2500, or Chief Counsel, tel.: 202/622–2410, Office of Foreign Assets Control, Department of the Treasury, Washington, DC 20220.

SUPPLEMENTARY INFORMATION:

Electronic Availability

This document is available as an electronic file on *The Federal Bulletin Board* the day of publication in the **Federal Register**. By modem, dial 202/512–1387 and type ''/GO FAC,'' or call 202/512–1530 for disk or paper copies. This file is available for downloading without charge in ASCII and Adobe Acrobat® readable (*.PDF) formats. For Internet access, the address for use with the World Wide Web (Home Page), Telnet, or FTP protocol is: *fedbbs.access.gpo.gov.* This document and additional information concerning the programs of the Office of Foreign Assets Control are available for downloading from the Office's Internet Home Page: *http://www.treas.gov/ofac,* or in fax form through the Office's 24-hour fax-on-demand service: call 202/622–0077 using a fax machine, fax modem, or (within the United States) a touch-tone telephone.

Background

Pursuant to Presidential Determination No. 96–7 of December 27, 1995 (61 FR 2887, January 29, 1996), and Executive Order 13192 of January 17, 2001 (66 FR 7379, Jan. 23, 2001), most Treasury-administered sanctions imposed upon the Federal Republic of Yugoslavia (Serbia & Montenegro) (the ''FRY(S&M)'') in response to the actions of the FRY(S&M) in Bosnia and Herzegovina from 1992 through 1995 and with respect to Kosovo from 1998 through 2000 have been suspended or lifted. Nevertheless, most property and interests in property blocked under either the Bosnia-related sanctions regulations (31 CFR part 585) or the Kosovo-related sanctions regulations (31 CFR part 586) have remained blocked, primarily to provide for the address of claims and encumbrances that may be associated with such property or interests in property, including potential claims of the successor states of the former Socialist Federal Republic of Yugoslavia.

As part of the U.S. Government's efforts to assist the FRY(S&M) in recovering from the effects of the Milosevic regime, certain steps are being taken to unblock much of the remaining property and interests in property blocked under either 31 CFR part 585 or 31 CFR part 586. On October 3, 2001 (66 FR 50506), OFAC issued an interim final rule amending 31 CFR part 586, which included authorization for the unblocking of certain Yugoslav debt and authorization for the release of certain blocked financial transfers. At present, OFAC is issuing general licenses, effective February 25, 2003, authorizing the unblocking of all remaining blocked property and interests in property, except (i) property or interests in property of diplomatic and/or consular missions of the former Socialist Federal

Republic of Yugoslavia, (ii) property or interests in property of those persons who are presently subject to sanctions under either the Federal Republic of Yugoslavia (Serbia & Montenegro) Milosevic Regulations set forth at 31 CFR part 587 or the Western Balkans Transactions Regulations set forth at 31 CFR part 588, or who are otherwise subject to sanctions under other parts of 31 CFR chapter V, and (iii) the property or interests in property of the central bank of the former Socialist Federal Republic of Yugoslavia, *i.e.*, the National Bank of Yugoslavia, that have been blocked pursuant to 31 CFR part 585. (Property and interests in property of the National Bank of Yugoslavia blocked pursuant to 31 CFR part 586 will be unblocked pursuant to the general license being issued at § 586.520.)

In order to allow for claims and encumbrances associated with the property and interests in property being unblocked to be addressed in a manner consistent with Presidential Determination No. 96–7 and Executive Order 13192, OFAC is also issuing general licenses, effective December 27, 2002, authorizing any person or government to seek judicial or other legal process with respect to property or interests in property being unblocked. These general licenses are intended to help persons and governments, including the successor states to the former Socialist Federal Republic of Yugoslavia, to protect any rights they may have with respect to such property or interests in property. These general licenses do not constitute a determination that any particular property or interest in property subject to the unblocking authorization would not be subject to defenses against any judicial or legal process, including claims of immunity.

Because the amendment of 31 CFR parts 585 and 586 involves a foreign affairs function, the provisions of Executive Order 12866 and the Administrative Procedure Act (5 U.S.C. 553) (the ''APA'') requiring notice of proposed rulemaking, opportunity for public participation, and delay in effective date, are inapplicable. Because no notice of proposed rulemaking is required for this rule, the Regulatory Flexibility Act (5 U.S.C. 601–612) does not apply.

Paperwork Reduction Act

The collections of information related to 31 CFR parts 585 and 586 are contained in 31 CFR part 501 (the ''Reporting and Procedures Regulations''). Pursuant to the Paperwork Reduction Act of 1995 (44 U.S.C. 3507), those collections of information have been approved by the Office of Management and Budget under control number 1505–0164. An agency may not conduct or sponsor, and a person is not required to respond to, a collection of information unless the collection of information displays a valid control number.

List of Subjects

31 CFR Part 585

Administrative practice and procedure, Banks and banking, Blocking of assets, Bosnia and Herzegovina, Federal Republic of Yugoslavia (Serbia & Montenegro), Montenegro, Reporting and recordkeeping requirements, Serbia.

31 CFR Part 586

Administrative practice and procedure, Banks, Banking, Blocking of assets, Federal Republic of Yugoslavia (Serbia & Montenegro), Kosovo, Montenegro, Reporting and recordkeeping requirements, Serbia.

For the reasons set forth in the preamble, 31 CFR parts 585 and 586 are amended as follows:

PART 585—FEDERAL REPUBLIC OF YUGOSLAVIA (SERBIA & MONTENEGRO) AND BOSNIAN SERB–CONTROLLED AREAS OF THE REPUBLIC OF BOSNIA AND HERZEGOVINA SANCTIONS REGULATIONS

1. The authority citation for part 585 continues to read as follows:

Authority: 3 U.S.C. 301; 22 U.S.C. 287(c); 31 U.S.C. 321(b); 49 U.S.C. 40106; 50 U.S.C. 1601–1651, 1701–1706; Pub. L. 101–410, 104 Stat. 890 (28 U.S.C. 2461 note); E.O. 12808, 57 FR 23299, 3 CFR, 1992 Comp., p. 305; E.O. 12810, 57 FR 23299, 3 CFR, 1992 Comp., p. 307; E.O. 12831, 58 FR 5253, 3 CFR, 1993 Comp., p. 576; E.O. 12846, 58 FR 25771, 3 CFR, 1993 Comp., p. 599; E.O. 12934, 59 FR 54117, 3 CFR, 1994 Comp., p. 930.

Subpart E—Licenses, Authorizations, and Statements of Licensing Policy

2. Section 585.529 is added to subpart E to read as follows:

§ 585.529 Unblocking of previously blocked property.

(a)(1) Except for such property and interests in property described in paragraph (a)(2) of this section, as of February 25, 2003, all transactions that otherwise would be prohibited by this part involving property or interests in property blocked pursuant to Executive Order 12808 of May 30, 1992, Executive Order 12810 of June 5, 1992, Executive Order 12846 of April 25, 1993, or Executive Order 12934 of October 25, 1994, that has remained blocked pursuant to Presidential Determination No. 96–7 of December 27, 1995, are authorized.

(2) The authorization in paragraph (a)(1) does not apply to:

(i) Property or interests in property of diplomatic and/or consular missions of the former Socialist Federal Republic of Yugoslavia,

(ii) Property or interests in property blocked pursuant to this part of those persons presently subject to sanctions under either the Federal Republic of Yugoslavia (Serbia & Montenegro) Milosevic Regulations set forth at 31 CFR part 587 or the Western Balkans Transactions Regulations set forth at 31 CFR part 588, or who are otherwise subject to sanctions under this chapter, or

(iii) Property or interests in property of the National Bank of Yugoslavia blocked pursuant to this part.

(b) As of December 27, 2002, any person or government is authorized to seek an attachment, judgment, decree, lien, or other judicial or legal process against or with respect to any property or interests in property subject to the unblocking authorization set forth in paragraph (a) of this section. This section does not authorize any execution against, final settlement with respect to, garnishment of, or other action effecting the transfer of any property or interests in property subject to the unblocking authorization set forth in paragraph (a) of this section prior to February 25, 2003.

Note to paragraph (b) of § 585.529: Any person or government seeking judicial or other legal process under the authority of this paragraph must comply with the reporting requirements set forth under 31 CFR 501.605 pertaining to litigation, arbitration and dispute resolution proceedings.

PART 586—FEDERAL REPUBLIC OF YUGOSLAVIA (SERBIA & MONTENEGRO) KOSOVO SANCTIONS REGULATIONS

3. The authority citation for part 586 continues to read as follows:

Authority: 3 U.S.C. 301; 31 U.S.C. 321(b); 50 U.S.C. 1601–1651, 1701–1706; E.O. 13088, 63 FR 32109, 3 CFR, 98 Comp., p. 191; E.O. 13121, 64 FR 24021, 3 CFR, 99 Comp., p. 176; E.O. 13192, 66 FR 7379, January 23, 2001.

Subpart E—Licenses, Authorizations, and Statements of Licensing Policy

4. Section 586.520 is added to subpart E to read as follows:

§ 586.520 Unblocking of previously blocked property.

(a)(1) Except for such property and interests in property set forth in paragraph (a)(2) of this section, as of February 25, 2003, all transactions that otherwise would be prohibited by this part involving property or interests in property blocked pursuant to Executive Order 13088 of June 9, 1998, or Executive Order 13121 of April 30, 1999, that has remained blocked pursuant to Executive Order 13192 of January 17, 2001, are authorized.

(2) The authorization in paragraph (a)(1) does not apply to property or interests in property blocked pursuant to this part of those persons presently subject to sanctions under either the Federal Republic of Yugoslavia (Serbia & Montenegro) Milosevic Regulations set forth at 31 CFR part 587 or the Western Balkans Transactions Regulations set forth at 31 CFR part 588, or who are otherwise subject to sanctions under this chapter.

(b)(1) As of December 27, 2002, any person or government is authorized to seek an attachment, judgment, decree, lien, or other judicial or legal process against or with respect to any property or interests in property subject to the unblocking authorization set forth in paragraph (a) of this section. This section does not authorize any execution against, final settlement with respect to, garnishment of, or other action effecting the transfer of any property or interests in property subject to the unblocking authorization set forth in paragraph (a) of this section prior to February 25, 2003.

Note to paragraph (b) of § 586.520: Any person or government seeking judicial or other legal process under the authority of this paragraph must comply with the reporting requirements set forth under 31 CFR 501.605 pertaining to litigation, arbitration and dispute resolution proceedings.

Dated: December 12, 2002.

R. Richard Newcomb,

Director, Office of Foreign Assets Control.

Approved: December 17, 2002.

Kenneth E. Lawson,

Assistant Secretary (Enforcement), Department of the Treasury.

[FR Doc. 02–32757 Filed 12–23–02; 4:44 pm]

BILLING CODE 4810–25–P

DEPARTMENT OF TRANSPORTATION

Coast Guard

33 CFR Part 117

[CGD08–02–042]

RIN 2115–AE47

Drawbridge Operation Regulation; Mississippi River, Dubuque, IA

AGENCY: Coast Guard, DOT.

ACTION: Temporary rule.

SUMMARY: The Commander, Eighth Coast Guard District is temporarily changing the regulation governing the Illinois Central Railroad Drawbridge, Mile 579.9, Upper Mississippi River. From 12:01 a.m., December 19, 2002, until 7 a.m., March 1, 2003, the drawbridge shall open on signal if at least 24 hours advance notice is given. This temporary rule is issued to facilitate annual maintenance and repair on the bridge.

DATES: This temporary rule is effective 12:01 a.m. on December 19, 2002, to 7 a.m. on March 1, 2003.

ADDRESSES: Documents referred to in this rule are available for inspection or copying at room 2.107f in the Robert A. Young Federal Building at Eighth Coast Guard District, Bridge Branch, 1222 Spruce Street, St. Louis, MO 63103–2832, between 8 a.m. and 4 p.m., Monday through Friday, except Federal holidays. The telephone number is (314) 539–3900, extension 2378. Commander, Eighth Coast Guard District (obr) maintains the public docket for this rulemaking.

FOR FURTHER INFORMATION CONTACT: Mr. Roger K. Wiebusch, Bridge Administrator, (314) 539–3900, extension 2378.

SUPPLEMENTARY INFORMATION:

Good Cause for Not Publishing an NPRM

We did not publish a notice of proposed rulemaking (NPRM) for this regulation. Under 5 U.S.C. 553(b)(B), the Coast Guard finds that good cause exists for not publishing an NPRM. This rule is being promulgated without an NPRM as a matter of public safety. Annual maintenance on the Illinois Central Railroad Drawbridge in Dubuque, Iowa is performed by a roving railroad maintenance crew whose schedule difficult to forecast. In order to keep up with maintenance of all drawbridges in the area, the maintenance crew must move quickly from one maintenance job to the next. Publishing an NPRM and allowing for the requisite comment period would severely reduce the repair time and prevent the maintenance crew from completing annual maintenance to the drawbridge. Therefore, the Coast Guard finds the public safety is better served by not publishing an NPRM.

Good Cause for Making Rule Effective in Less Than 30 Days

Under 5 U.S.C. 553(d)(3), the Coast Guard finds that good cause exists for making this rule effective less than 30 days after publication in the **Federal Register**. For the same reasons that an NPRM was not published, the Coast Guard finds that public safety is better served by making this rule effective less than 30 days after its publication.

Background and Purpose

On November 19, 2002, the Canadian National/Illinois Central Railroad Company requested a temporary change to the operation of the Illinois Central Railroad Drawbridge across the Upper Mississippi River, Mile 579.9 at Dubuque, Iowa. Canadian National/Illinois Central Railroad Company requested that 24 hours advance notice be required to open the bridge during the maintenance period. The maintenance is necessary to ensure the continued safe operation of the drawbridge. Advance notice may be given by calling the Canadian National/Illinois Central Dispatcher's office at (800) 711–3477 at any time; or Mr. Mike McDermott, office (319) 236–9238 or cell phone (319) 269–2102.

The Illinois Central Railroad Drawbridge navigation span has a vertical clearance of 19.9 feet above normal pool in the closed to navigation position. Navigation on the waterway consists primarily of commercial tows and recreational watercraft. Presently, the draw opens on signal for passage of river traffic. The Canadian National/Illinois Central Railroad Company requested the drawbridge be permitted to remain closed to navigation from 12:01 a.m., December 19, 2002, until 7 a.m., March 1, 2003 unless 24 hours advance notice is given to open the drawbridge. Winter freezing of the Upper Mississippi River coupled with the closure of Army Corps of Engineer's Lock No. 17 (Mile 437.0 UMR), Lock No. 19 (Mile 364.1 UMR) until 7:30 a.m. March 1, 2003 and Lock No. 24 (Mile 273.4 UMR) until March 15, 2003 will reduce any significant navigation demands for the drawspan opening. The Illinois Central Railroad Drawbridge, Mile 579.9, Upper Mississippi River, is located upstream from Lock 17. Performing maintenance on the bridge during the winter, when the number of vessels likely to be impacted is minimal,

is preferred to bridge closures restricting vessel traffic during the commercial navigation season. This temporary change to the drawbridge's operation has been coordinated with the commercial waterway operators. No objections to the proposed temporary rule were raised.

Regulatory Evaluation

This rule is not a ''significant regulatory action'' under section 3(f) of Executive Order 12866 and does not require an assessment of potential costs and benefits under section 6(a)(3) of that Order. The Office of Management and Budget has not reviewed it under that Order. It is not ''significant'' under the regulatory policies and procedures of the Department of Transportation (DOT) (44 FR 11040, February 26, 1979).

Because vessel traffic in the area of Dubuque, Iowa will be greatly reduced by winter icing of the Upper Mississippi River and the closure of Locks 17, 19, and 24, it is expected that this rule will have minimal effect on economic or budgetary effects on the local community.

Small Entities

Under the Regulatory Flexibility Act (5 U.S.C. 601–612), we have considered whether this rule would have a significant economic impact on a substantial number of small entities. The term ''small entities'' comprises small businesses, not-for-profit organizations that are independently owned and operated and are not dominant in their fields, and governmental jurisdictions with populations of less than 50,000. The temporary rule will have a negligible impact on vessel traffic. The primary users of the Upper Mississippi River in Dubuque, Iowa are commercial towboat operators. The onset of winter conditions on the Upper Mississippi River coupled with the closure of Army Corps of Engineer's Lock No. 17 (Mile 437.0 UMR), Lock No. 19 (Mile 364.1 UMR) until March 1, 2003, and Lock No. 24 (Mile 273.4 UMR) until March 15, 2003, will preclude any significant navigation demands for the drawspan opening. In order to obtain a bridge opening, an advance notice of 24-hours is required. This requirement has been coordinated with the three local fleeting-harbor owners, and railroad and navigation interests, who do not object.

The Coast Guard certifies under 5 U.S.C. 605 (b) that this rule will not have a significant economic impact on a substantial number of small entities.

Assistance for Small Entities

Under section 213(a) of the Small Business Regulatory Enforcement Fairness Act of 1996 (Public Law 104–121), we offered to assist small entities in understanding the rule so that they can better evaluate its effects on them and participate in the rulemaking process. Any individual that qualifies or, believes he or she qualifies as a small entity and requires assistance with the provisions of this rule, may contact Mr. Roger K. Wiebusch, Bridge Administrator, Eighth Coast Guard District, Bridge Branch, at (314) 539–3900, extension 2378.

Small businesses may send comments on the actions of Federal employees who enforce, or otherwise determine compliance with, Federal regulations to the Small Business and Agriculture Regulatory Enforcement Ombudsman and the Regional Small Business Regulatory Fairness Boards. The Ombudsman evaluates these actions annually and rates each agency's responsiveness to small business. If you wish to comment on actions by employees of the Coast Guard, call 1–888–REG–FAIR (1–888–734–3247).

Collection of Information

This rule contains no new collection-of-information under the Paperwork Reduction Act of 1995 (44 U.S.C. 3501–3520).

Federalism

A rule has implications for federalism under Executive Order 13132, Federalism, if it has a substantial direct effect on State or local governments and would either preempt State law or impose a substantial direct cost of compliance on them. We have analyzed this rule under that Order and have determined that it does not have implications for federalism.

Unfunded Mandates Reform Act

The Unfunded Mandates Reform Act of 1995 (2 U.S.C. 1531–1538) requires Federal agencies to assess the effects of their discretionary regulatory actions. In particular, the Act addresses actions that may result in the expenditure by a State, local or tribal government, in the aggregate, or by the private sector of $100,000,000 or more in any one year. Though this rule will not result in such an expenditure, we do discuss the effects of this rule elsewhere in this preamble

Taking of Private Property

This rule will not affect a taking of private property or otherwise have taking implications under Executive Order 12630, Governmental Actions and Interference with Constitutionally Protected Property Rights.

Civil Justice Reform

This rule meets applicable standards in sections 3(a) and 3(b)(2) of Executive Order 12988, Civil Justice Reform, to minimize litigation, eliminate ambiguity, and reduce burden.

Protection of Children

We have analyzed this rule under Executive Order 13045, Protection of Children from Environmental Health Risks and Safety Risks. This rule is not an economically significant rule and does not concern an environmental risk to health or risk to safety that may disproportionately affect children.

Indian Tribal Governments

This rule does not have tribal implications under Executive Order 13175, Consultation and Coordination with Indian Tribal Governments, because it does not have a substantial direct effect on one or more Indian tribes, on the relationship between the Federal Government and Indian tribes, or on the distribution of power and responsibilities between the Federal Government and Indian tribes.

Energy Effects

We have analyzed this rule under Executive Order 13211, Actions Concerning Regulations That Significantly Affect Energy Supply, Distribution, or Use. We have determined that it is not a ''significant energy action'' under that order because it is not a ''significant regulatory action'' under Executive Order 12866 and is not likely to have a significant adverse effect on the supply, distribution, or use of energy. It has not been designated by the Administrator of the Office of Information and Regulatory Affairs as a significant energy action. Therefore, it does not require a Statement of Energy Effects under Executive Order 13211.

Environment

The Coast Guard considered the environmental impact of this rule and concluded that under figure 2–1, paragraph (32)(e), of Commandant Instruction M16475.1D, this rule is categorically excluded from further environmental documentation. Promulgation of changes to drawbridge regulations has been found not to have significant effect on the human environment. A ''Categorical Exclusion Determination'' is available in the docket for inspection or copying where indicated under **ADDRESSES.**

List of Subjects in 33 CFR Part 117

Bridges.

Regulations

For the reasons set out in the preamble, the Coast Guard amends Part 117 as follows:

PART 117—DRAWBRIDGE OPERATION REGULATIONS

1. The authority citation for part 117 continues to read as follows:

Authority: 33 U.S.C. Sec. 499; 49 CFR 1.46; 33 CFR 1.05–1(g); section 117.255 also issued under the authority of Public Law 102–587, 106 Stat. 5039.

2. Effective 12:01 a.m., December 19, 2002, through 7:00 a.m., March 1, 2003, § 117.T408 is added to read as follows:

§ 117.T408 Upper Mississippi River.

Illinois Central Railroad Drawbridge Mile 579.9 Upper Mississippi River. From 12:01 a.m., December 19, 2002 through 7 a.m., March 1, 2003, the drawspan requires 24 hours advance notice for bridge operation. Bridge opening requests must be made 24 hours in advance by calling the Canadian National/Illinois Central Dispatcher's office at (800) 711–3477 at any time or Mr. Mike McDermott, office (319) 236–9238 or cell phone (319) 269–2102.

Dated: December 6, 2002.

Roy J. Casto,

Rear Admiral, Coast Guard, Commander, Eighth Coast Guard District.

[FR Doc. 02–32724 Filed 12–26–02; 8:45 am]

BILLING CODE 4910–15–P

DEPARTMENT OF TRANSPORTATION

Coast Guard

33 CFR Part 117

[CGD08–02–043]

RIN 2115–AE47

Drawbridge Operation Regulation; Mississippi River, Burlington, IA

AGENCY: Coast Guard, DOT.

ACTION: Temporary rule.

SUMMARY: The Commander, Eighth Coast Guard District is temporarily changing the regulation governing the Burlington Railroad Drawbridge, Mile 403.1, Upper Mississippi River. From 12:01 a.m., December 15, 2002, until 7 a.m., March 15, 2003, the drawbridge shall open on signal if at least 6 hours advance notice is given. This temporary rule is issued to facilitate annual maintenance and repair on the bridge.

DATES: This temporary rule is effective 12:01 a.m. on December 15, 2002, to 7 a.m. on March 15, 2003.

ADDRESSES: Documents referred to in this rule are available for inspection or copying at room 2.107f in the Robert A. Young Federal Building at Eighth Coast Guard District, Bridge Branch, 1222 Spruce Street, St. Louis, MO 63103–2832, between 8 a.m. and 4 p.m., Monday through Friday, except Federal holidays. The telephone number is (314) 539–3900, extension 2378. Commander, Eighth Coast Guard District (obr) maintains the public docket for this rulemaking.

FOR FURTHER INFORMATION CONTACT: Mr. Roger K. Wiebusch, Bridge Administrator, (314) 539–3900, extension 2378.

SUPPLEMENTARY INFORMATION:

Good Cause for Not Publishing an NPRM

We did not publish a notice of proposed rulemaking (NPRM) for this regulation. Under 5 U.S.C. 553(b)(B), the Coast Guard finds that good cause exists for not publishing an NPRM. This rule is being promulgated without an NPRM as a matter of public safety. Annual maintenance on the Burlington Railroad Drawbridge in Burlington, Iowa is performed by a roving railroad maintenance crew whose schedule is difficult to forecast. In order to keep up with maintenance of all drawbridges in the area, the maintenance crew must move quickly from one maintenance job to the next. Publishing an NPRM and allowing for the requisite comment period would severely reduce the repair time and prevent the maintenance crew from completing annual maintenance to the drawbridge. Therefore, the Coast Guard finds the public safety is better served by not publishing an NPRM.

Good Cause for Making Rule Effective in Less Than 30 Days

Under 5 U.S.C. 553(d)(3), the Coast Guard finds that good cause exists for making this rule effective less than 30 days after publication in the **Federal Register**. For the same reasons that an NPRM was not published, the Coast Guard finds that public safety is better served by making this rule effective less than 30 days after its publication.

Background and Purpose

On November 15, 2002, the Burlington Northern Santa Fe Railway Company requested a temporary change to the operation of the Burlington Railroad Drawbridge across the Upper Mississippi River, Mile 403.1 at Burlington, Iowa. Burlington Northern Santa Fe Railway Company requested that 6 hours advance notice be required to open the bridge during the maintenance period. The maintenance is necessary to ensure the continued safe operation of the drawbridge. Advance notice may be given by calling Mr. Craig D. Krause, Burlington Northern Santa Fe Railway Company, Supervisor of Structures, at (402) 458–7652 during normal working hours, or Mr. Joe Hicks, at (319) 394–9431.

The Burlington Railroad Drawbridge navigation span has a vertical clearance of 21.5 feet above normal pool in the closed to navigation position. Navigation on the waterway consists primarily of commercial tows and recreational watercraft. Presently, the draw opens on signal for passage of river traffic. The Burlington Northern Santa Fe Railway Company requested the drawbridge be permitted to remain closed to navigation from 12:01 a.m., December 15, 2002, until 7 a.m., March 15, 2003 unless 6 hours advance notice is given to open the drawbridge to allow time to make repairs. The Burlington Railroad Drawbridge, Mile 403.1, Upper Mississippi River, is located upstream from Lock 19. Winter freezing of the Upper Mississippi River coupled with the closure of Army Corps of Engineer's Lock No. 17 (Mile 437.0 UMR), Lock No. 19 (Mile 364.1 UMR) until 7:30 a.m. March 1, 2003 and Lock No. 24 (Mile 273.4 UMR) until March 15, 2003 will reduce any significant navigation demands for the drawspan opening. Performing maintenance on the bridge during the winter when the number of vessels likely to be impacted is minimal is preferred to restricting vessel traffic during the commercial navigation season. This temporary change to the drawbridge's operation has been coordinated with the commercial waterway operators. No objections to the proposed temporary rule were raised.

Regulatory Evaluation

This rule is not a ''significant regulatory action'' under section 3(f) of Executive Order 12866 and does not require an assessment of potential costs and benefits under section 6(a)(3) of that Order. The Office of Management and Budget has not reviewed it under that Order. It is not ''significant'' under the regulatory policies and procedures of the Department of Transportation (DOT) (44 FR 11040, February 26, 1979).

Because vessel traffic in the area of Burlington, Iowa will be greatly reduced by winter icing of the Upper Mississippi River and the closure of Locks 17, 19, and 24 it is expected that this rule will

have minimal economic or budgetary effects on the local community.

Small Entities

Under the Regulatory Flexibility Act (5 U.S.C. 601–612), we have considered whether this rule would have a significant economic impact on a substantial number of small entities. The term ''small entities'' comprises small businesses, not-for-profit organizations that are independently owned and operated and are not dominant in their fields, and governmental jurisdictions with populations of less than 50,000.

The Coast Guard certifies under 5 U.S.C. 605(b) that this rule will not have a significant economic impact on a substantial number of small entities.

The temporary rule will have a negligible impact on vessel traffic. The primary users of the Upper Mississippi River in Burlington, Iowa are commercial towboat operators. The onset of winter conditions on the Upper Mississippi River coupled with the closure of Army Corps of Engineer's Lock No. 17 (Mile 437.0 UMR), Lock No. 19 (Mile 364.1 UMR) until March 1, 2003 and Lock No. 24 (Mile 273.4 UMR) until March 15, 2003 will preclude any significant navigation demands for the drawspan opening. In order to obtain a bridge opening, an advance notice of 6 hours is required. This requirement has been coordinated with the local fleeting-harbor owners, the railroad, and navigation interests in the area.

The Coast Guard certifies under 5 U.S.C. 605(b) that this rule will not have a significant economic impact on a substantial number of small entities.

Assistance for Small Entities

Under section 213(a) of the Small Business Regulatory Enforcement Fairness Act of 1996 (Public Law 104–121), we offered to assist small entities in understanding the rule so that they can better evaluate its effects on them and participate in the rulemaking process. Any individual that qualifies or, believes he or she qualifies as a small entity and requires assistance with the provisions of this rule, may contact Mr. Roger K. Wiebusch, Bridge Administrator, Eighth Coast Guard District, Bridge Branch, at (314) 539–3900, extension 2378.

Small businesses may send comments on the actions of Federal employees who enforce, or otherwise determine compliance with, Federal regulations to the Small Business and Agriculture Regulatory Enforcement Ombudsman and the Regional Small Business Regulatory Fairness Boards. The Ombudsman evaluates these actions annually and rates each agency's responsiveness to small business. If you wish to comment on actions by employees of the Coast Guard, call 1–888–REG–FAIR (1–888–734–3247).

Collection of Information

This rule contains no new collection-of-information under the Paperwork Reduction Act of 1995 (44 U.S.C. 3501–3520).

Federalism

A rule has implications for federalism under Executive Order 13132, Federalism, if it has a substantial direct effect on State or local governments and would either preempt State law or impose a substantial direct cost of compliance on them. We have analyzed this rule under that Order and have determined that it does not have implications for federalism.

Unfunded Mandates Reform Act

The Unfunded Mandates Reform Act of 1995 (2 U.S.C. 1531–1538) requires Federal agencies to assess the effects of their discretionary regulatory actions. In particular, the Act addresses actions that may result in the expenditure by a State, local or tribal government, in the aggregate, or by the private sector of $100,000,000 or more in any one year. Though this rule will not result in such an expenditure, we do discuss the effects of this rule elsewhere in this preamble.

Taking of Private Property

This rule will not affect a taking of private property or otherwise have taking implications under Executive Order 12630, Governmental Actions and Interference with Constitutionally Protected Property Rights.

Civil Justice Reform

This rule meets applicable standards in sections 3(a) and 3(b)(2) of Executive Order 12988, Civil Justice Reform, to minimize litigation, eliminate ambiguity, and reduce burden.

Protection of Children

We have analyzed this rule under Executive Order 13045, Protection of Children from Environmental Health Risks and Safety Risks. This rule is not an economically significant rule and does not concern an environmental risk to health or risk to safety that may disproportionately affect children.

Indian Tribal Governments

This rule does not have tribal implications under Executive Order 13175, Consultation and Coordination with Indian Tribal Governments, because it does not have a substantial direct effect on one or more Indian tribes, on the relationship between the Federal Government and Indian tribes, or on the distribution of power and responsibilities between the Federal Government and Indian tribes.

Energy Effects

We have analyzed this rule under Executive Order 13211, Actions Concerning Regulations That Significantly Affect Energy Supply, Distribution, or Use. We have determined that it is not a ''significant energy action'' under that order because it is not a ''significant regulatory action'' under Executive Order 12866 and is not likely to have a significant adverse effect on the supply, distribution, or use of energy. It has not been designated by the Administrator of the Office of Information and Regulatory Affairs as a significant energy action. Therefore, it does not require a Statement of Energy Effects under Executive Order 13211.

Environment

The Coast Guard considered the environmental impact of this rule and concluded that under figure 2–1, paragraph (32)(e), of Commandant Instruction M16475.1D, this rule is categorically excluded from further environmental documentation. Promulgation of changes to drawbridge regulations has been found not to have significant effect on the human environment. A ''Categorical Exclusion Determination'' is available in the docket for inspection or copying where indicated under **ADDRESSES.**

List of Subjects in 33 CFR Part 117

Bridges.

Regulations

For the reasons set out in the preamble, the Coast Guard amends Part 117 as follows:

PART 117—DRAWBRIDGE OPERATION REGULATIONS

1. The authority citation for part 117 continues to read as follows:

Authority: 33 U.S.C. Sec. 499; 49 CFR 1.46; 33 CFR 1.05–1(g); section 117.255 also issued under the authority of Public Law 102–587, 106 Stat. 5039.

2. Effective 12:01 a.m., December 15, 2002, through 7 a.m., March 15, 2003, § 117.T408 is temporarily added to read as follows:

§ 117.T408 Upper Mississippi River.

Burlington Railroad Drawbridge, Mile 403.1, Upper Mississippi River. From 12:01 a.m., December 15, 2002 through

7 a.m., March 15, 2003, the drawspan requires 6 hours advance notice for bridge operation. Bridge opening requests must be made 6 hours in advance by calling Mr. Craig D. Krause, Burlington Northern Santa Fe Railway Company, Supervisor of Structures, at (402) 458–7652 during normal working hours, or Mr. Joe Hicks at (319) 394–9431.

Dated: December 13, 2002.

Roy J. Casto,

Rear Admiral, Coast Guard, Commander, Eighth Coast Guard District.

[FR Doc. 02–32723 Filed 12–26–02; 8:45 am]

BILLING CODE 4910–15–P

DEPARTMENT OF EDUCATION

34 CFR Parts 700, 701, and 702

Removal of Regulations

AGENCY: Institute of Education Sciences, Department of Education.

ACTION: Final regulations.

SUMMARY: The Secretary amends the Code of Federal Regulations to remove obsolete regulations. As a result of enactment of the Education Sciences Reform Act of 2002, these regulations are no longer needed. The Secretary therefore takes this action to remove the regulations.

DATES: Parts 700, 701, and 702 are removed effective December 27, 2002.

FOR FURTHER INFORMATION CONTACT: Elizabeth Payer, U.S. Department of Education, 555 New Jersey Avenue, NW., room 502e, Washington, DC 20208. Telephone: (202) 219–1310.

If you use a telecommunications device for the deaf (TDD), you may call the Federal Information Relay Service (FIRS) at 1–800–877–8339.

Individuals with disabilities may obtain this document in an alternative format (*e.g.*, Braille, large print, audiotape, or computer diskette) on request to the contact person listed under **FOR FURTHER INFORMATION CONTACT.**

SUPPLMENTARY INFORMATION: As a result of enactment of the Education Sciences Reform Act of 2002, Title I of Public Law 107–279, enacted November 5, 2002, the regulations at 34 CFR parts 700, 701, and 702 are removed because they are no longer necessary. The removal of these regulations does not alter the obligations of current recipients of Federal funds. The regulations in effect when a grant or other agreement is made govern that grant or agreement, unless otherwise specifically provided.

The regulations removed are:

(1) Standards for the Conduct and Evaluation of Activities Carried Out by the Office of Educational Research and Improvement (OERI)—Evaluation of Applications for Grants and Cooperative Agreements and Proposals for Contracts (34 CFR part 700);

(2) Standards for Conduct and Evaluation of Activities Carried Out by the Office of Educational Research and Improvement (OERI)—Designation of Exemplary and Promising Programs (34 CFR part 701); and

(3) Standards for the Conduct and Evaluation of Activities Carried Out by the Office of Educational Research and Improvement (OERI)—Evaluation of the Performance of Recipients of Grants, Cooperative Agreements, and Contracts (34 CFR part 702).

Waiver of Proposed Rulemaking

In accordance with the Administrative Procedure Act (5 U.S.C. 553), it is the practice of the Secretary to offer interested parties the opportunity to comment on proposed regulations. However, this document merely removes obsolete regulations from the Code of Federal Regulations. Removal of the regulations does not establish or affect substantive policy. Therefore, the Secretary has determined pursuant to 5 U.S.C. 553(b)(B), that public comment is unnecessary and contrary to the public interest.

Paperwork Reduction Act of 1995

These regulations do not contain any information collection requirements.

Electronic Access to This Document

You may view this document, as well as all other Department of Education documents published in the **Federal Register**, in text or Adobe Portable Document Format (PDF) on the Internet at the following site: *http://www.ed.gov/legislation/FedRegister*

To use PDF you must have Adobe Acrobat Reader, which is available free at this site. If you have questions about using PDF, call the U.S. Government Printing Office (GPO), toll free, at 1–888–293–6498; or in the Washington, DC, area at (202) 512–1530.

Note: The official version of this document is the document published in the **Federal Register**. Free Internet access to the official edition of the **Federal Register** and the Code of Federal Regulations is available on GPO Access at: *http://www.access.gpo.gov/nara/index.html*

(Catalog of Federal Domestic Assistance number does not apply.)

List of Subjects

34 CFR Part 700

Education, Educational research, Elementary and secondary education, Government contracts, Grant programs—education, Libraries, Reporting and recordkeeping requirements.

34 CFR Part 701

Education, Educational research, Reporting and recordkeeping requirements.

34 CFR Part 702

Education, Educational research, Reporting and recordkeeping requirements.

Dated: December 23, 2002.

Grover J. Whitehurst,

Director, Institute of Education Sciences.

PARTS 700, 701, AND 702—[REMOVED]

For the reasons stated in the preamble, under the authority at 20 U.S.C. 1221e-3 and 20 U.S.C. 9501 *et seq.*, the Secretary amends Title 34 of the Code of Federal Regulations by removing parts 700, 701, and 702.

[FR Doc. 02–32716 Filed 12–26–02; 8:45 am]

BILLING CODE 4000–01–P

DEPARTMENT OF VETERANS AFFAIRS

38 CFR Part 3

RIN 2900–AK98

Extension of the Presumptive Period for Compensation for Gulf War Veterans' Undiagnosed Illnesses

AGENCY: Department of Veterans Affairs.

ACTION: Final rule.

SUMMARY: This document affirms an amendment to the Department of Veterans Affairs (VA) adjudication regulations regarding compensation for disabilities resulting from undiagnosed illnesses suffered by Persian Gulf War veterans. The amendment extends the period within which such disabilities must become manifest to a compensable degree in order for entitlement for compensation to be established. The amendment ensures that veterans with compensable disabilities due to undiagnosed illnesses that may be related to active service in the Southwest Asia theater of operations during the Persian Gulf War may qualify for benefits.

DATES: *Effective Date:* December 27, 2002.

FOR FURTHER INFORMATION CONTACT: John Bisset, Jr., Regulations Staff, Compensation and Pension Service, Veterans Benefits Administration, 810 Vermont Avenue, NW., Washington, DC 20420, telephone (202) 273–7213.

SUPPLEMENTARY INFORMATION: Regulations to establish the framework necessary for the Secretary to pay compensation under the authority granted by the ''Persian Gulf War Veterans'' Benefits Act of 1994,'' title I of Public Law 103–446, are set forth in 38 CFR 3.117. Under these regulations, VA may pay compensation for disability resulting from an undiagnosed illness becoming manifest to a compensable degree in a Persian Gulf War veteran within a specified presumptive period. An interim final rule extending the presumptive period through December 31, 2006, was published on November 9, 2001 (66 FR 56614–615).

We provided a 60-day comment period that ended January 8, 2002. We received no comments. Based on the rationale set forth in the interim final rule we now affirm as a final rule the extension of the presumptive period made by the interim final rule.

Paperwork Reduction Act

This document contains no provisions constituting a collection of information under the Paperwork Reduction Act (44 U.S.C. 3501–3520).

Administrative Procedure Act

This document affirms without any changes an amendment made by an interim final rule that is already in effect. Accordingly, we have concluded under 5 U.S.C. 553 that there is good cause for dispensing with a delayed effective date based on the conclusion that such procedure is impracticable, unnecessary, and contrary to the public interest.

Unfunded Mandates

The Unfunded Mandates Reform Act requires, at 2 U.S.C. 1532, that agencies prepare an assessment of anticipated costs and benefits before developing any rule that may result in an expenditure by State, local, or tribal governments, in the aggregate, or by the private sector of $100 million or more in any given year. This final rule would have no consequential effect on State, local, or tribal governments, nor will it impose costs on the private sector.

Regulatory Flexibility Act

The Secretary hereby certifies that this final rule will not have a significant economic impact on a substantial number of small entities as they are defined in the Regulatory Flexibility Act (RFA), 5 U.S.C. 601–612. Only VA beneficiaries could be directly affected. Therefore, pursuant to 5 U.S.C. 605(b), this final rule is exempt from the initial and final regulatory flexibility analysis requirements of sections 603 and 604.

Executive Order 12866

This final rule has been reviewed by OMB under Executive Order 12866.

The Catalog of Federal Domestic Assistance program numbers are 64.109 and 64.110.

List of Subjects in 38 CFR Part 3

Administrative practice and procedure, Claims, Health care, Individuals with disabilities, Pensions, Veterans, Vietnam.

Approved: October 24, 2002.

Anthony J. Principi,

Secretary of Veterans Affairs.

PART 3—ADJUDICATION

Accordingly, the interim rule amending 38 CFR part 3 which was published at 66 FR 56614 on November 9, 2001, is adopted as a final rule without change.

[FR Doc. 02–32625 Filed 12–26–02; 8:45 am]

BILLING CODE 8320–01–P

ENVIRONMENTAL PROTECTION AGENCY

40 CFR Part 52

[NC 102–200304(a); FRL–7425–2]

Approval and Promulgation of Implementation Plans North Carolina: Approval of Revisions to Miscellaneous Regulations Within the North Carolina State Implementation Plan

AGENCY: Environmental Protection Agency (EPA).

ACTION: Direct final rule.

SUMMARY: On August 7, 2002, the North Carolina Department of Environment and Natural Resources submitted revisions to the North Carolina State Implementation Plan (SIP). North Carolina is adopting rule 15A NCAC 2D .0542, Control of Particulate Emissions from Cotton Ginning Operations. In addition, North Carolina is amending rules 15A NCAC 2D .0504, Particulates from Wood Burning Indirect Heat Exchangers, .0927, Bulk Gasoline Terminals, .0932, Gasoline Truck Tanks and Vapor Collection Systems and 15A NCAC 2Q .0102, Activities Exempt From Permitting Requirements and .0104, Where to Obtain and File Permit Applications. The EPA is approving these revisions.

DATES: This direct final rule is effective February 25, 2003 without further notice, unless EPA receives adverse comment by January 27, 2003. If adverse comment is received, EPA will publish a timely withdrawal of the direct final rule in the **Federal Register** and inform the public that the rule will not take effect.

ADDRESSES: All comments should be addressed to: Randy Terry at the EPA, Region 4 Air Planning Branch, 61 Forsyth Street, SW, Atlanta, Georgia 30303-8960.

Copies of the State submittal(s) are available at the following addresses for inspection during normal business hours:

Environmental Protection Agency, Region 4, Air Planning Branch, 61 Forsyth Street, SW, Atlanta, Georgia 30303–8960. Randy Terry, 404/562–9032.

North Carolina Department of Environment, Health, and Natural Resources, 512 North Salisbury Street, Raleigh, North Carolina 27604.

FOR FURTHER INFORMATION CONTACT: Randy B. Terry, Regulatory Development Section, Air Planning Branch, Air, Pesticides and Toxics Management Division, Region 4, U.S. Environmental Protection Agency, 61 Forsyth Street, SW, Atlanta, Georgia 30303–8960. The telephone number is (404) 562–9032. Mr. Terry can also be reached via electronic mail at *terry.randy@epa.gov*.

SUPPLEMENTARY INFORMATION:

I. Background

On August 7, 2002, the North Carolina Department of Environment and Natural Resources submitted revisions to the North Carolina SIP. These revisions involve the adoption of rule 15A NCAC 2D .0542, Control of Particulate Emissions from Cotton Ginning Operations, the amending of multiple rules within Section 15A NCAC 2D .0900 Volatile Organic Compounds, and several other miscellaneous revisions. An analysis of each of the major revisions submitted is listed below.

II. Analysis of State's Submittal

15A NCAC 2D

.0504 Particulates From Wood Burning Indirect Heat Exchangers

This rule has been amended to correct the reference to paragraph (d) of this rule to paragraph (f).

.0542 Control of Particulate Emissions from Cotton Ginning Operations

This rule has been adopted to establish particulate control requirements specific to cotton ginning operations. The rule applies to all cotton gins and requires one or more 1D–3D cyclones or an equivalent device to achieve 95 percent efficiency on all high pressure exhausts and lint cleaning exhausts, and one or more 2D–2D cyclones or an equivalent device to achieve 90 percent efficiency on all remaining low pressure exhausts. Small gins that do not already have control devices on lint cleaners and battery condensers are not required to install controls on them. The rule also requires:

- Raincaps to be removed,
- Sp;an inspection and maintenance schedule,
- A three-sided enclosure or a wet suppression system at the trash cyclone dump area, trash stacker/composting,
- Daily cleaning of lint from non-storage areas of the gin yard,
- Cleaning of lint and debris from paved areas,
- Dust suppression and speed limits in unpaved areas,
- Covering of trucks transporting trash material,
- Removal of overspill from trucks, and
- Daily cleaning of the trash hopper dump area.

In addition, the rule requires a baseline study of the air flow system to ensure air flows are within design range for the collection device and monitoring devices for pressure, flow rate, and other operating conditions to ensure proper operation an maintenance of the control devices. The owner or operator is also required to take and record monthly static pressure readings, conduct daily inspections of the system and record problems and corrective actions in a logbook, and at the conclusion of the season conduct an inspection to identify all maintenance activities and repairs needed prior to the next season. The rule also requires the owner to keep records of parameters established in the baseline study, monthly static pressure checks, observations of daily inspections and corrective actions. Gin owners or operators are also required to submit an annual report of the number of bales of cotton produced during the previous ginning season and a schedule of repair and maintenance to be conducted prior to the start of the next season. The rule also contains provisions for request and approval of alternative control measures.

.0927 Bulk Gasoline Terminals and .0932 Gasoline Truck Tanks and Vapor Collection Systems

These rules have been amended to require the owner or operator of the truck tank to file a copy of its most recent leak tightness certification test with bulk gasoline terminals where the tank is loaded. The amendments also require bulk gasoline terminals to keep on file a copy of the leak tight certification for each truck tank that they load.

15A NCAC 2Q

.0102 Activities Exempt From Permitting Requirements

This rule is being amended to add language that allows the Director, if he finds that an activity exempted under paragraph (b) of this rule is in violation of or has violated a rule in 15A NCAC 2D., to revoke the permit exemption for that activity and require that activity to be permitted under this Subchapter.

.0104 Where to Obtain and File Permit Applications

This rule is being amended to correct the address for the North Carolina Division of Air Quality.

III. Final Action

EPA is approving the aforementioned changes to the SIP because the revisions are consistent with Clean Air Act and EPA regulatory requirements. The EPA is publishing this rule without prior proposal because the Agency views this as a noncontroversial submittal and anticipates no adverse comments. However, in the proposed rules section of this **Federal Register** publication, EPA is publishing a separate document that will serve as the proposal to approve the SIP revision should adverse comments be filed. This rule will be effective February 25, 2003 without further notice unless the Agency receives adverse comments by January 27, 2003.

If the EPA receives such comments, then EPA will publish a document withdrawing the final rule and informing the public that the rule will not take effect. All public comments received will then be addressed in a subsequent final rule based on the proposed rule. The EPA will not institute a second comment period. Parties interested in commenting should do so at this time. If no such comments are received, the public is advised that this rule will be effective on February 25, 2003 and no further action will be taken on the proposed rule. Please note that if we receive adverse comment on an amendment, paragraph, or section of this rule and if that provision may be severed from the remainder of the rule, we may adopt as final those provisions of the rule that are not the subject of an adverse comment.

IV. Administrative Requirements

Under Executive Order 12866 (58 FR 51735, October 4, 1993), this action is not a ''significant regulatory action'' and therefore is not subject to review by the Office of Management and Budget. For this reason, this action is also not subject to Executive Order 13211, ''Actions Concerning Regulations That Significantly Affect Energy Supply, Distribution, or Use'' (66 FR 28355, May 22, 2001). This action merely approves state law as meeting Federal requirements and imposes no additional requirements beyond those imposed by state law. Accordingly, the Administrator certifies that this rule will not have a significant economic impact on a substantial number of small entities under the Regulatory Flexibility Act (5 U.S.C. 601 *et seq.*). Because this rule approves pre-existing requirements under state law and does not impose any additional enforceable duty beyond that required by state law, it does not contain any unfunded mandate or significantly or uniquely affect small governments, as described in the Unfunded Mandates Reform Act of 1995 (Pub. L. 104–4).

This rule also does not have tribal implications because it will not have a substantial direct effect on one or more Indian tribes, on the relationship between the Federal Government and Indian tribes, or on the distribution of power and responsibilities between the Federal Government and Indian tribes, as specified by Executive Order 13175 (65 FR 67249, November 9, 2000). This action also does not have Federalism implications because it does not have substantial direct effects on the States, on the relationship between the national government and the States, or on the distribution of power and responsibilities among the various levels of government, as specified in Executive Order 13132 (64 FR 43255, August 10, 1999). This action merely approves a state rule implementing a Federal standard, and does not alter the relationship or the distribution of power and responsibilities established in the Clean Air Act. This rule also is not subject to Executive Order 13045 ''Protection of Children from Environmental Health Risks and Safety Risks'' (62 FR 19885, April 23, 1997), because it is not economically significant.

In reviewing SIP submissions, EPA's role is to approve state choices,

provided that they meet the criteria of the Clean Air Act. In this context, in the absence of a prior existing requirement for the State to use voluntary consensus standards (VCS), EPA has no authority to disapprove a SIP submission for failure to use VCS. It would thus be inconsistent with applicable law for EPA, when it reviews a SIP submission, to use VCS in place of a SIP submission that otherwise satisfies the provisions of the Clean Air Act. Thus, the requirements of section 12(d) of the National Technology Transfer and Advancement Act of 1995 (15 U.S.C. 272 note) do not apply. This rule does not impose an information collection burden under the provisions of the Paperwork Reduction Act of 1995 (44 U.S.C. 3501 *et seq.*).

The Congressional Review Act, 5 U.S.C. 801 *et seq.*, as added by the Small Business Regulatory Enforcement Fairness Act of 1996, generally provides that before a rule may take effect, the agency promulgating the rule must submit a rule report, which includes a copy of the rule, to each House of the Congress and to the Comptroller General of the United States. EPA will submit a report containing this rule and other required information to the U.S. Senate, the U.S. House of Representatives, and the Comptroller General of the United States prior to publication of the rule in the **Federal Register**. A major rule cannot take effect until 60 days after it is published in the **Federal Register**. This action is not a ''major rule'' as defined by 5 U.S.C. 804(2).

Under section 307(b)(1) of the Clean Air Act, petitions for judicial review of this action must be filed in the United States Court of Appeals for the appropriate circuit by February 25, 2003. Filing a petition for reconsideration by the Administrator of this final rule does not affect the finality of this rule for the purposes of judicial review nor does it extend the time within which a petition for judicial review may be filed, and shall not postpone the effectiveness of such rule or action. This action may not be challenged later in proceedings to enforce its requirements. (See section 307(b)(2).)

List of Subjects in 40 CFR Part 52

Environmental protection, Air pollution control, Carbon monoxide, Intergovernmental relations, Nitrogen dioxide, Ozone, Reporting and recordkeeping requirements.

Dated: October 31, 2002.

A. Stanley Meiburg,

Acting Regional Administrator, Region 4.

PART 52—[AMENDED]

1. The authority for citation for part 52 continues to read as follows:

Authority: 42 U.S.C. 7401 *et seq.*

Subpart II—North Carolina

2. In § 52.1770(c), Table 1 is amended to read as follows:

a. Under subchapter 2D, section .0500, by adding a new entry .0542, and revising entry .0504;

b. Under subchapter 2D, section .0900, by revising entries .0927 and .0932; and

c. Under subchapter 2Q, section .0100, by revising entries .0102 and .0104.

§ 52.1770 Identification of plan.

* * * * *

(c) * * *

TABLE 1—EPA APPROVED NORTH CAROLINA REGULATIONS

State citation	Title/subject	State effective date	EPA approval date	Comments
Subchapter 2D	Air Pollution Control Requirements			
* *	* *	*	*	*
Section .0500	Emissions Control Standards			
* *	* *	*	*	*
Sect. .0504	Particulates From Wood Burning Indirect Heat Exchangers.	7/01/02	12/27/02	
* *	* *	*	*	*
Sect. .0542	Control of Particulate Emissions From Cotton Ginning Operations.	07/01/02	12/27/02	
* *	* *	*	*	*
Section .0900	Volatile Organic Compounds			
* *	* *	*	*	*
Sect. .0927	Bulk Gasoline Terminals	07/01/02	12/27/02	
* *	* *	*	*	*
Sect. .0932	Gasoline Truck Tanks and Vapor Collection Systems.	07/01/02	12/27/02	
* *	* *	*	*	*
.				
Subchapter 2Q	Air Quality Permits			
.				
Section .0100	General Provisions			
* *	* *	*	*	*
Sect. .0102	Activities Exempt From Permitting Requirements.	07/01/02	12/27/02	
* *	* *	*	*	*
Sect. .0104	Where to Obtain and File Permit Applications.	07/01/02	12/27/02	

TABLE 1—EPA APPROVED NORTH CAROLINA REGULATIONS—Continued

State citation	Title/subject	State effective date	EPA approval date	Comments
*	*	*	*	*

* * * * *

[FR Doc. 02–32137 Filed 12–26–02; 8:45 am]

BILLING CODE 6560–50–P

ENVIRONMENTAL PROTECTION AGENCY

40 CFR Part 52

[NC–93; NC–101–200122a; FRL–7402–6]

Approval and Promulgation of Implementation Plans North Carolina: Approval of Revisions to North Carolina State Implementation Plan: Transportation Conformity Rule and Interagency Memorandum of Agreements

AGENCY: Environmental Protection Agency (EPA).

ACTION: Direct final rule.

SUMMARY: The EPA is approving a revision to the North Carolina State Implementation Plan (SIP) with the exception of one state regulation pertaining to triggers. The revision contains the transportation conformity rule pursuant to the Clean Air Act as amended in 1990 (Act) and seven memoranda of agreements that establish procedures for consultation as part of the transportation conformity provisions. The transportation conformity rule assures that projected emissions from transportation plans, improvement programs and projects in air quality nonattainment or maintenance areas stay within the motor vehicle emissions ceiling contained in the SIP. The transportation conformity SIP revision enables the State to implement and enforce the Federal transportation conformity requirements at the state level per regulations for conformity to State or Federal Implementation Plans of Transportation Plans, Programs, and Projects Developed, funded or Approved Under Title 23 U.S.C. of the Federal Transit Laws. This EPA approval action streamlines the conformity process to allow direct consultation among agencies at the local level. This final approval action is limited to requirements for Transportation Conformity. Rationale for approving this SIP revision is provided in the **SUPPLEMENTAL INFORMATION** section of this action.

DATES: This direct final rule is effective on February 25, 2003, without further notice, unless EPA receives adverse comment before January 27, 2003. If adverse comments are received, EPA will publish a timely withdrawal of the direct final rule in the **Federal Register** informing the public that this rule will not take effect.

ADDRESSES: All comments should be addressed to: Kelly Sheckler at the EPA, Region 4 Air Planning Branch, 61 Forsyth Street, SW., Atlanta, Georgia 30303–8960.

Copies of the State submittal(s) are available at the following addresses for inspection during normal business hours:

Environmental Protection Agency, Region 4, Air Planning Branch, 61 Forsyth Street, SW., Atlanta, Georgia 30303–8960. Kelly Sheckler, 404/562–9042.

North Carolina Department of Environment and Natural Resources, 2728 Capital Boulevard, Raleigh, North Carolina 27604.

FOR FURTHER INFORMATION CONTACT: Kelly Sheckler at 404/562–9042, e-mail: *Sheckler.Kelly@epa.gov.*

SUPPLEMENTARY INFORMATION: Outlined below are the contents of this document:

I. Background
  A. What Is a SIP?
  B. What Is the Federal Approval Process for a SIP?
  C. What Is Transportation Conformity?
  D. Why Must the State Submit a Transportation Conformity SIP?
  E. How Does Transportation Conformity Work?
II. Approval of the State Transportation Conformity Rule
  A. What Did the State Submit?
  B. What Is EPA Approving Today and Why?
  C. How Did the State Satisfy the Interagency Consultation Process (40 CFR 93.105)?
III. Final Action
IV. Administrative Requirements

I. Background

A. What Is a SIP?

The states, under section 110 of the Act, must develop air pollution regulations and control strategies to ensure that state air quality meets National Ambient Air Quality Standards (NAAQS) established by EPA. The Act, under section 109, established these NAAQS which currently address six criteria pollutants. These pollutants are: Carbon monoxide, nitrogen dioxide, ozone, lead, particulate matter, and sulfur dioxide.

Each state must send these regulations and control strategies to EPA for approval and incorporation into the Federally enforceable SIP, which protects air quality and contains emission control plans for NAAQS nonattainment area. These SIPs can be extensive, containing state regulations or other enforceable documents and supporting information such as emission inventories, monitoring networks, and modeling demonstrations.

B. What Is the Federal Approval Process for a SIP?

The states must formally adopt the regulations and control strategies consistent with state and Federal laws for incorporating the state regulations into the Federally enforceable SIP. This process generally includes a public notice, public comment period, public hearing, and a formal adoption by a state-authorized rulemaking body.

Once a state rule, regulation, or control strategy is adopted, the state will send these provisions to EPA for inclusion in the Federally enforceable SIP. EPA must then determine the appropriate Federal action, provide public notice, and request additional public comment on the action. The possible Federal actions include: Approval, disapproval, conditional approval and limited approval/disapproval. If adverse comments are received, EPA must consider and address the comments before taking final action.

EPA incorporates state regulations and supporting information (sent under section 110 of the Act) into the Federally approved SIP through the approval action. EPA maintains records of all such SIP actions in the CFR at Title 40, Part 52, entitled ''Approval and Promulgation of Implementation Plans.'' The EPA does not reproduce the text of the Federally approved state regulations in the CFR. They are ''incorporated by reference,'' which means that the

specific state regulation is cited in the CFR and is considered a part of the CFR the same as if the text were fully printed in the CFR.

C. What Is Transportation Conformity?

Conformity first appeared as a requirement in the Act's 1977 amendments (Public Law 95–95). Although the Act did not define conformity, it stated that no Federal department could engage in, support in any way or provide financial assistance for, license or permit, or approve any activity which did not conform to a SIP which has been approved or promulgated.

The 1990 Amendments to the Act expanded the scope and content of the conformity concept by defining conformity to a SIP. Section 176(c) of the Act defines conformity as conformity to the SIP's purpose of eliminating or reducing the severity and number of violations of the NAAQS and achieving expeditious attainment of such standards. Also, the Act states ''that no Federal activity will: (1) cause or contribute to any new violation of any standard in any area, (2) increase the frequency or severity of any existing violation of any standard in any area, or (3) delay timely attainment of any standard or any required interim emission reductions or other milestones in any area.'' The requirements of section 176(c) of the Clean Air Act apply to all departments, agencies and instrumentalities of the Federal government. Transportation conformity refers only to the conformity of transportation plans, programs and projects that are funded or approved under title 23 U.S.C. or the Federal Transit Act (49 U.S.C. Chapter 53).

D. Why Must the State Submit a Transportation Conformity SIP?

A transportation conformity SIP is a plan which contains criteria and procedures for the Department of Transportation (DOT), Metropolitan Planning Organizations (MPOs), and other state or local agencies to assess the conformity of transportation plans, programs and projects to ensure that they do not cause or contribute to new violations of a NAAQS in the area substantially affected by the project, increase the frequency or severity of existing violations of a standard in such area or delay timely attainment. 40 CFR 51.390, subpart T requires states to submit a SIP that establishes criteria for conformity to EPA. 40 CFR Part 93, subpart A, provides the criteria the SIP must meet to satisfy 40 CFR 51.390.

EPA was required to issue criteria and procedures for determining conformity of transportation plans, programs, and projects to a SIP by section 176(c) of the Act. The Act also required the procedure to include a requirement that each state submit a revision to its SIP including conformity criteria and procedures. EPA published the first transportation conformity rule in the November 24, 1993, **Federal Register** (FR), and it was codified at 40 CFR part 51, subpart T and 40 CFR part 93, subpart A. The transportation conformity rule required the states to adopt and submit a transportation conformity SIP revision to the appropriate EPA Regional Office by November 25, 1994. The State of North Carolina submitted a transportation conformity SIP to the EPA Region 4 on November 15, 1994. EPA did not take action on this SIP because the Agency was in the process of revising the transportation conformity requirements. EPA revised the transportation conformity rule on August 7, 1995 (60 FR 40098), November 14, 1995 (60 FR 57179), and August 15, 1997 (62 FR 43780), and codified the revisions under 40 CFR part 51, subpart T and 40 CFR part 93, subpart A—Conformity to State or Federal Implementation Plans of Transportation Plans, Programs, and Projects Developed, Funded or Approved Under Title 23 U.S.C. of the Federal Transit Laws (62 FR 43780). EPA's action of August 15, 1997, required the states to change their rules and submit a SIP revision to EPA by August 15, 1998.

States may choose to develop in place of regulations, a memorandum of agreement (MOA) which establishes the roles and procedures for transportation conformity. The MOA includes the detailed consultation procedures developed for that particular area. The MOAs are enforceable through the signature of all the transportation and air quality agencies, including the Federal Highway Administration, Federal Transit Administration and the Environmental Protection Agency.

E. How Does Transportation Conformity Work?

The Federal or state transportation conformity rule applies to all NAAQS nonattainment and maintenance areas in the state. The Metropolitan Planning Organizations (MPO), the State Department of Transportation (DOT) (in absence of a MPO), State and local Air Quality Agencies , U.S. Environmental Protection Agency and U.S. Department of Transportation (USDOT) are involved in the process of making conformity determinations. Conformity determinations are made on programs and plans such as transportation improvement programs (TIP), transportation plans, and projects. The MPOs calculate the projected emissions that will result from implementation of the transportation plans and programs and compare those calculated emissions to the motor vehicle emissions budget established in the SIP. The calculated emissions must be equal to or smaller than the Federally approved motor vehicle emissions budget in order for USDOT to make a positive conformity determination with respect to the SIP.

II. Approval of the State Transportation Conformity Rule

A. What Did the State Submit?

The State of North Carolina chose to address the transportation conformity SIP requirements using a combination of rules and MOAs. All portions of the conformity rule, with the exception of 40 CFR 93.105, were developed as a state rule, applicable to all areas subject to conformity in the state. For the consultation procedures in 40 CFR 93.105, the state chose to develop a MOA for each individual nonattainment/maintenance area. On April 13, 1998, the State of North Carolina, through the Department of Environment and Natural Resources (DENR), submitted the rules for transportation conformity. The consultation procedures for individual MOAs were not included with this submittal. The Environmental Management Commission (EMC) of North Carolina amended North Carolina Air Quality rules to adopt revisions to 15A NCAC 2D .2000, Transportation Conformity. [Authority G.S. 150B–21.19]. DENR gave notice of rule-making proceedings to the public on April 15, 1998, Notice of text on August 3, 1998 and hearing on August 20, 1998. The agency adopted the revisions on October 10, 1998, effective on April 1, 1999. MOAs for Greensboro, High Point, Durham, Raleigh (CAMPO), Durham-Chapel Hill (DCHC), and Winston-Salem were signed by all parties and submitted to EPA for approval into the SIP on July 19, 2002. To fully meet the requirements of the Transportation Conformity Rule, the Mecklenburg-Union interagency consultation agreement will need to be submitted as a revision to the SIP. A separate action to approve that MOA will be taken once the state submits it to EPA.

B. What Is EPA Approving Today and Why?

EPA is approving the North Carolina transportation conformity rule submitted to the EPA Region office on April 13, 1999 by the Director of the

North Carolina DENR. One exception is the approval of state regulation .2003, which is the only portion of the state rule that will not be approved in today's action. State regulation .2003 requires compliance with 40 CFR 93.104 of the conformity rule. The state adopted this provision prior to EPA's rulemaking change to 40 CFR 93.104(e). The August 2002, rulemaking changes the starting point for eighteen month clocks that are currently running for areas with initial SIP submissions, so that these areas are given the full eighteen months after EPA's adequacy finding to determine conformity to their SIPs. In other words, in areas where a SIP has been submitted and EPA is currently reviewing it for adequacy, the eighteen-month clock required by 40 CFR 93.104(e) (2) will now not start until the effective date of our adequacy finding. For areas that have submitted initial SIPs that EPA has already found adequate and to which conformity has not yet been determined, the August rule restarts the eighteen-month clock from the effective date of EPA's positive adequacy finding. For more information on the eighteen-month conformity requirement for initial SIP submissions see the August 6, 2002 final rule (67 FR 50808).

EPA has evaluated this SIP revision and the seven MOA's and has determined that the SIP requirements of the Federal transportation conformity rule as described in 40 CFR part 51, subpart T and 40 CFR part 93, subpart A have been met. The North Carolina DENR has satisfied participation and comprehensive interagency consultation requirements due to the adoption of the SIP and MOAs at the local level. Therefore, EPA is approving this revision to the North Carolina SIP.

C. How Did the State Satisfy the Interagency Consultation Process (40 CFR 93.105)?

EPA's rule requires the states to develop their own processes and procedures for interagency consultation among the Federal, state, and local agencies and resolution of conflicts, meeting the criteria in 40 CFR 93.105. The SIP revision must include the process and procedures to be followed by the MPO, State DOT, Federal Highway Administration (FHWA), Federal Transit Administration (FTA), the state and local air quality agencies and EPA before making conformity determinations. The transportation conformity SIP revision must include processes and procedures for the state and local air quality agencies and EPA to coordinate the development of applicable SIPS with MPOs, states DOTs, FHWA and FTA.

The State of North Carolina developed its consultation rule based on the elements contained in 40 CFR 93.105, and included it in the MOAs. As a first step, the State worked with each of the MPOs through existing monthly statewide interagency committee meetings. The interagency committee includes representatives from the state air quality agency-DENR, NCDOT, FHWA–NC Division, FTA-Region 4, EPA Region 4, Capital Area MPO, Mecklenburg-Union MPO, Greensboro MPO, Gaston MPO, Winston-Salem MPO, Durham MPO, High Point MPO, and the Mecklenburg County Department of Environmental Protection. The interagency committee met regularly and drafted the consultation rules considering elements in 40 CFR 93.105, and integrated the local transportation planning and local and state SIP processing procedures and processes into the consultation MOAs for each nonattainment/maintenance area. The consultation process developed in these MOAs are unique to the State of North Carolina. The MOA's are enforceable against the parties by their signed consent in the MOA.

III. Final Action

EPA is approving the aforementioned changes to the SIP, with one exception o section .2003 which requires the state comply with outdated conformity rule trigger provisions. Because the state adopted this regulation prior to EPA's rulemaking amending 40 CFR 93.104(e), this action approves state regulation .2003 with the exception of its reference to 40 CFR 93.104(e). All other revisions are consistent with Clean Air Act and EPA regulatory requirements. In addition, EPA is approving the aforementioned seven MOA's.

The EPA is publishing this rule without prior proposal because the Agency views this as a noncontroversial submittal and anticipates no adverse comments. However, in the proposed rules section of this **Federal Register** publication, EPA is publishing a separate document that will serve as the proposal to approve the SIP revision should adverse comments be filed. This rule will be effective February 25, 2003 without further notice unless the Agency receives adverse comments by January 27, 2003.

Please note that if EPA receives adverse comment on an amendment, paragraph, or section of this rule and if that provision may be severed from the remainder of the rule, EPA may adopt as final those provisions of the rule that are not the subject of an adverse comment.

If the EPA receives such comments, then EPA will publish a document withdrawing the final rule and informing the public that the rule will not take effect. All public comments received will then be addressed in a subsequent final rule based on the proposed rule. The EPA will not institute a second comment period. Parties interested in commenting should do so at this time. If no such comments are received, the public is advised that this rule will be effective on February 25, 2003 and no further action will be taken on the proposed rule.

IV. Administrative Requirements

Under Executive Order 12866 (58 FR 51735, October 4, 1993), this action is not a ''significant regulatory action'' and therefore is not subject to review by the Office of Management and Budget. For this reason, this action is also not subject to Executive Order 13211, ''Actions Concerning Regulations That Significantly Affect Energy Supply, Distribution, or Use'' (66 FR 28355, May 22, 2001). This action merely approves state law as meeting Federal requirements and imposes no additional requirements beyond those imposed by state law. Accordingly, the Administrator certifies that this rule will not have a significant economic impact on a substantial number of small entities under the Regulatory Flexibility Act (5 U.S.C. 601 *et seq.*). Because this rule approves pre-existing requirements under state law and does not impose any additional enforceable duty beyond that required by state law, it does not contain any unfunded mandate or significantly or uniquely affect small governments, as described in the Unfunded Mandates Reform Act of 1995 (Pub. L. 104–4).

This rule also does not have tribal implications because it will not have a substantial direct effect on one or more Indian tribes, on the relationship between the Federal Government and Indian tribes, or on the distribution of power and responsibilities between the Federal Government and Indian tribes, as specified by Executive Order 13175 (65 FR 67249, November 9, 2000). This action also does not have Federalism implications because it does not have substantial direct effects on the States, on the relationship between the national government and the States, or on the distribution of power and responsibilities among the various levels of government, as specified in Executive Order 13132 (64 FR 43255, August 10, 1999). This action merely approves a state rule implementing a Federal standard, and does not alter the relationship or the distribution of power

and responsibilities established in the Clean Air Act. This rule also is not subject to Executive Order 13045 ''Protection of Children from Environmental Health Risks and Safety Risks'' (62 FR 19885, April 23, 1997), because it is not economically significant.

In reviewing SIP submissions, EPA's role is to approve state choices, provided that they meet the criteria of the Clean Air Act. In this context, in the absence of a prior existing requirement for the State to use voluntary consensus standards (VCS), EPA has no authority to disapprove a SIP submission for failure to use VCS. It would thus be inconsistent with applicable law for EPA, when it reviews a SIP submission, to use VCS in place of a SIP submission that otherwise satisfies the provisions of the Clean Air Act. Thus, the requirements of section 12(d) of the National Technology Transfer and Advancement Act of 1995 (15 U.S.C. 272 note) do not apply. This rule does not impose an information collection burden under the provisions of the Paperwork Reduction Act of 1995 (44 U.S.C. 3501 *et seq.*).

The Congressional Review Act, 5 U.S.C. section 801 *et seq.*, as added by the Small Business Regulatory Enforcement Fairness Act of 1996, generally provides that before a rule may take effect, the agency promulgating the rule must submit a rule report, which includes a copy of the rule, to each House of the Congress and to the Comptroller General of the United States. EPA will submit a report containing this rule and other required information to the U.S. Senate, the U.S. House of Representatives, and the Comptroller General of the United States prior to publication of the rule in the **Federal Register**. A major rule cannot take effect until 60 days after it is published in the **Federal Register**. This action is not a ''major rule'' as defined by 5 U.S.C. section 804(2).

Under section 307(b)(1) of the Clean Air Act, petitions for judicial review of this action must be filed in the United States Court of Appeals for the appropriate circuit by February 25, 2003. Filing a petition for reconsideration by the Administrator of this final rule does not affect the finality of this rule for the purposes of judicial review nor does it extend the time within which a petition for judicial review may be filed, and shall not postpone the effectiveness of such rule or action. This action may not be challenged later in proceedings to enforce its requirements. (See section 307(b)(2)).

List of Subjects in 40 CFR Part 52

Environmental protection, Air pollution control, Carbon monoxide, Hydrocarbons, Intergovernmental relations, Nitrogen dioxide, Ozone, Reporting and recordkeeping requirements.

Dated: October 21, 2002.

A. Stanley Meiburg,

Acting Regional Administrator, Region 4.

40 CFR Part 52 is amended as follows:

PART 52—[AMENDED]

1. The authority for citation for part 52 continues to read as follows:

Authority: 42 U.S.C. 7401 *et seq.*

Subpart II—North Carolina

2. Section 52.1770 is amended:

a. In paragraph (c), Table 1 is amended under subchapter 2D by adding in numerical order a new section ''.2000 Transportation Conformity''.

b. By adding and reserving paragraph (d).

c. By adding a new paragraph (e).

The additions read as follows:

§ 52.1770 Identification of plan.

* * * * *

(c) * * *

TABLE 1.—EPA APPROVED NORTH CAROLINA REGULATIONS

State citation	Title/subject	State effective date	EPA approval date	Comments
Subchapter 2D	Air Pollution Control Requirements			
*	*	*	*	*
	Section .2000 Transportation Conformity			
Sect. .2001	Purpose, Scope and Applicability	04/01/99	12/27/02	
Sect. .2002	Definitions	04/01/99	12/27/02	
Sect. .2003	Transportation Conformity Determination	04/01/99	12/27/02	Except for the incorporation by reference of 40 CFR 93.104(e) of the Transportation Conformity Rule.
Sect. .2004	Determining transportation Related Emissions	04/01/99	12/27/02	
Sect. .2005	Memorandum of Agreement	04/01/99	12/27/02	

* * * * *

(d) [Reserved]

(e) EPA Approved North Carolina Non-regulatory Provisions.

EPA APPROVED NORTH CAROLINA NON-REGULATORY PROVISIONS

Provision	State effective date	EPA approval date	Federal Register citation
Capital Area, North Carolina Interagency Transportation Conformity Memorandum of Agreement.	1/01/02	12/27/02	[insert FR page citation from publication date]
Durham-Chapel Hill Interagency Transportation Conformity Memorandum of Agreement.	1/01/02	12/27/02	[insert FR page citation from publication date]
Winston-Salem Interagency Transportation Conformity Memorandum of Agreement.	1/01/02	12/27/02	[insert FR page citation from publication date]
High Point Interagency Transportation Conformity Memorandum of Agreement.	1/01/02	12/27/02	[insert FR page citation from publication date]

EPA APPROVED NORTH CAROLINA NON-REGULATORY PROVISIONS—Continued

Provision	State effective date	EPA approval date	Federal Register citation
Greensboro Interagency Transportation Conformity Memorandum of Agreement.	1/01/02	12/27/02	[insert FR page citation from publication date]
Gaston, North Carolina Interagency Transportation Conformity Memorandum of Agreement.	1/01/02	12/27/02	[insert FR page citation from publication date]

[FR Doc. 02–32549 Filed 12–26–02; 8:45 am]
BILLING CODE 6560–50–P

ENVIRONMENTAL PROTECTION AGENCY

40 CFR Part 52

[NC–94;100–200305; FRL–7429–7]

Approval and Promulgation of Implementation Plans: North Carolina: Nitrogen Oxides Budget and Allowance Trading Program

AGENCY: Environmental Protection Agency (EPA).

ACTION: Final rule.

SUMMARY: EPA is approving a State Implementation Plan (SIP) revision submitted by the State of North Carolina, through the North Carolina Department of Environmental and Natural Resources (NCDENR), on September 18, 2001. This revision was submitted in response to the EPA's regulation entitled, ''Finding of Significant Contribution and Rulemaking for Certain States in the Ozone Transport Assessment Group Region for Purposes of Reducing Regional Transport of Ozone,'' otherwise known as the NO_X SIP Call. This revision establishes and requires a nitrogen oxides (NO_X) allowance trading program for large electric generating and industrial units; and reductions from internal combustion engines beginning in 2004. On December 26, 2000, EPA determined that North Carolina had failed to submit a SIP in response to the NO_X SIP Call, thus starting a 18 month clock for the mandatory imposition of sanctions and the obligation for EPA to promulgate a Federal Implementation Plan (FIP) within 24 months. On September 18, 2001, North Carolina submitted a NO_X SIP that was automatically deemed complete on March 18, 2002, stopping the sanctions clock. Through this **Federal Register** notice, both the sanctions clock and EPA's FIP obligation are terminated.

Separately, a vehicle inspection and maintenance program (I/M) achieving NO_X reductions has been approved. The NC NO_X SIP includes a budget demonstration and initial source allocations that demonstrate that North Carolina will achieve the required NO_X emission reductions in accordance with the timelines set forth in EPA's NO_X SIP Call. The intended effect of this SIP revision is to reduce emissions of NO_X in order to help areas in the Eastern United States attain the national ambient air quality standard for ozone. EPA proposed approval of this rule on June 24, 2002, (67 FR 42519) and received no adverse comments. Therefore, EPA is approving North Carolina's NO_X reduction and trading program because it meets the requirements of the Phase I and Phase II NO_X SIP Call that will significantly reduce ozone transport in the eastern United States.

EFFECTIVE DATE: This final rule is effective on January 27, 2003.

ADDRESSES: All comments should be addressed to: Randy Terry at the EPA, Region 4 Air Planning Branch, 61 Forsyth Street, SW., Atlanta, Georgia 30303–8960.

Copies of documents relative to this action are available at the following addresses for inspection during normal business hours:

Environmental Protection Agency, Region 4, Air Planning Branch, 61 Forsyth Street, SW., Atlanta, Georgia 30303–8960.

North Carolina Department of Environment and Natural Resources, 512 North Salisbury Street, Raleigh, North Carolina 27604.

FOR FURTHER INFORMATION CONTACT: Randy Terry, Regulatory Development Section, Air Planning Branch, Air, Pesticides and Toxics Management Division, Region 4, Environmental Protection Agency, Atlanta Federal Center, 61 Forsyth Street, SW., Atlanta, Georgia 30303–8960. The telephone number is (404) 562–9032. Mr. Terry can also be reached via electronic mail at *terry.randy@epa.gov*.

SUPPLEMENTARY INFORMATION:

I. Background

On September 18, 2001, the North Carolina Department of Environmental and Natural Resources (NCDENR) submitted a revision to its SIP to meet the requirements of the NO_X SIP Call. The revision consisted of the adoption of a new chapter, NCAC 2D .1400 Nitrogen Oxides Emissions containing thirteen new regulations: .1401 Definitions, .1402 Applicability, .1403 Compliance Schedules, .1404 Recordkeeping, Reporting, Monitoring, .1409 Stationary Internal Combustion Engines, .1416 Emission Allocations for Utility Companies, .1417 Emission Allocations for Large Combustion Sources, .1418 New Electric Generating Units, Large Boilers, and Large I/C Engines, .1419 Nitrogen Oxide Budget Trading Program, .1420 Periodic Review and Reallocations, .1421 Allocation for New Growth of Major Point Sources, .1422 Compliance Supplement Pool and Early Emission Reduction Credits, and .1423 Large Internal Combustion Engines. On June 24, 2002, (67 FR 42519) EPA published a notice of proposed rulemaking (NPR) to approve the September 18, 2001, SIP revision. That NPR provided for a public comment period ending on July 24, 2002. A detailed description of this SIP revision and EPA's rationale for approving it was provided in the proposed notice and will not be restated here. No significant or adverse comments were received on EPA's proposal. Within the June 24, 2002, NPR, EPA explained that the North Carolina NO_X Call Rule could not receive final approval until North Carolina had submitted and received full approval of their I/M regulations. North Carolina submitted these regulations to EPA on August 7, 2002. A direct final notice approving these regulations was published on October 30, 2002, (67 FR 66096) and no adverse comments were received. The approval of these regulations is therefore effective on December 30, 2002, as stated in the direct final approval.

II. Final Action

EPA is approving North Carolina's SIP revision including its NO_X Reduction and Trading Program and Internal Combustion engine rule, which was submitted on September 18, 2001. EPA finds that North Carolina's submittal is fully approveable because it meets the requirements of the NO_X SIP Call.

III. Administrative Requirements

Under Executive Order 12866 (58 FR 51735, October 4, 1993), this action is not a ''significant regulatory action'' and therefore is not subject to review by the Office of Management and Budget. For this reason, this action is also not subject to Executive Order 13211, ''Actions Concerning Regulations That Significantly Affect Energy Supply, Distribution, or Use'' (66 FR 28355, May 22, 2001). This action merely approves state law as meeting Federal requirements and imposes no additional requirements beyond those imposed by state law. Accordingly, the Administrator certifies that this rule will not have a significant economic impact on a substantial number of small entities under the Regulatory Flexibility Act (5 U.S.C. 601 *et seq.*). Because this rule approves pre-existing requirements under state law and does not impose any additional enforceable duty beyond that required by state law, it does not contain any unfunded mandate or significantly or uniquely affect small governments, as described in the Unfunded Mandates Reform Act of 1995 (Pub. L. 104–4).

This rule also does not have tribal implications because it will not have a substantial direct effect on one or more Indian tribes, on the relationship between the Federal government and Indian tribes, or on the distribution of power and responsibilities between the Federal government and Indian tribes, as specified by Executive Order 13175 (65 FR 67249, November 9, 2000). This action also does not have federalism implications because it does not have substantial direct effects on the States, on the relationship between the national government and the States, or on the distribution of power and responsibilities among the various levels of government, as specified in Executive Order 13132 (64 FR 43255, August 10, 1999). This action merely approves a state rule implementing a Federal standard, and does not alter the relationship or the distribution of power and responsibilities established in the Clean Air Act. This rule also is not subject to Executive Order 13045 ''Protection of Children from Environmental Health Risks and Safety Risks'' (62 FR 19885, April 23, 1997), because it is not economically significant.

In reviewing SIP submissions, EPA's role is to approve state choices, provided that they meet the criteria of the Clean Air Act. In this context, in the absence of a prior existing requirement for the State to use voluntary consensus standards (VCS), EPA has no authority to disapprove a SIP submission for failure to use VCS. It would thus be inconsistent with applicable law for EPA, when it reviews a SIP submission, to use VCS in place of a SIP submission that otherwise satisfies the provisions of the Clean Air Act. Thus, the requirements of section 12(d) of the National Technology Transfer and Advancement Act of 1995 (15 U.S.C. 272 note) do not apply. The approval of the North Carolina NO_X Reduction and Trading Program does not impose an information collection burden under the provisions of the Paperwork Reduction Act of 1995 (44 U.S.C. 3501 *et seq.*).

The Congressional Review Act, 5 U.S.C. 801 *et seq.*, as added by the Small Business Regulatory Enforcement Fairness Act of 1996, generally provides that before a rule may take effect, the agency promulgating the rule must submit a rule report, which includes a copy of the rule, to each House of the Congress and to the Comptroller General of the United States. EPA will submit a report containing this rule and other required information to the U.S. Senate, the U.S. House of Representatives, and the Comptroller General of the United States prior to publication of the rule in the **Federal Register**. A major rule cannot take effect until 60 days after it is published in the **Federal Register**. This action is not a ''major rule'' as defined by 5 U.S.C. section 804(2).

Under section 307(b)(1) of the Clean Air Act, petitions for judicial review of this action must be filed in the United States Court of Appeals for the appropriate circuit by February 25, 2003. Filing a petition for reconsideration by the Administrator of this final rule does not affect the finality of this rule for the purposes of judicial review nor does it extend the time within which a petition for judicial review may be filed, and shall not postpone the effectiveness of such rule or action. This action may not be challenged later in proceedings to enforce its requirements. (*See* section 307(b)(2).)

List of Subjects in 40 CFR Part 52

Environmental protection, Air pollution control, Incorporation by reference, Nitrogen dioxide, Ozone, Reporting and recordkeeping requirements.

Dated: December 2, 2002.

A. Stanley Meiburg,

Acting Regional Administrator, Region 4.

40 CFR part 52 is amended as follows:

PART 52—[AMENDED]

1. The authority citation for part 52 continues to read as follows:

Authority: 42 U.S.C. 7401 *et seq.*

Subpart II—North Carolina

2. In § 52.1770 paragraph (b) is revised and paragraph (c) is amended:

a. In table one, under subchapter 2D by adding, in numerical order, a new entry for ''Section .1400 Nitrogen Oxides Emissions.''

b. Under section .1400 by adding, in numerical order, for new entries ''.1401'', ''.1402'', ''.1403'', ''.1404'', ''.1409'', ''.1416'', ''.1417'', ''.1418'', ''.1419'', ''.1420'', ''.1421'', ''.1422'', and ''.1423''.

The revised and added material is set forth as follows:

§ 52.1770 Identification of plan.

* * * * *

(b) Incorporation by reference.

(1) Material listed in paragraphs (c) and (d) of this section with an EPA approval date prior to December 1, 2002, was approved for incorporation by reference by the Director of the Federal Register in accordance with 5 U.S.C. 552(a) and 1 CFR part 51. Material is incorporated as it exists on the date of the approval, and notice of any change in the material will be published in the **Federal Register**. Entries in paragraphs (c) and (d) of this section with EPA approval dates after December 1, 2002, will be incorporated by reference in the next update to the SIP compilation.

(2) EPA Region 4 certifies that the rules/regulations provided by EPA in the SIP compilation at the addresses in paragraph (b)(3) of this section are an exact duplicate of the officially promulgated State rules/regulations which have been approved as part of the State implementation plan as of December 1, 2002.

(3) Copies of the materials incorporated by reference may be inspected at the Region 4 EPA Office at 61 Forsyth Street, SW., Atlanta, GA 30303; the Office of the Federal Register, 800 North Capitol Street, NW., Suite 700, Washington, DC; or at the EPA, Air and Radiation Docket and Information Center, Room B–108, 1301 Constitution Avenue, (Mail Code 6102T) NW., Washington, DC 20460.

* * * * *

(c) * * *

TABLE 1—EPA APPROVED NORTH CAROLINA REGULATIONS

State citation	Title/subject	State effective date	EPA approval date	Comments
Subchapter 2D	Air Pollution Control Requirements 2D			
*	*	*	*	*
Section .1400	Nitrogen Oxides Emissions			
Sect. .1401	Definitions	7/15/02	[Insert FR citation].	
Sect. .1402	Applicability	7/15/02	[Insert FR citation].	
Sect. .1403	Compliance Schedules	7/15/02	[Insert FR citation].	
Sect. .1404	Recordkeeping, Reporting, Monitoring.	7/15/02	[Insert FR citation].	
Sect. .1409	Stationary Internal Combustion Engines.	7/15/02	[Insert FR citation].	
Sect. .1416	Emission Allocations for Utility Companies.	7/15/02	[Insert FR citation].	
Sect. .1417	Emission Allocations for large Combustion Sources.	7/15/02	[Insert FR citation].	
Sect. .1418	New Electric Generating Units, Large Boilers, and Large I/C Engines.	7/15/02	[Insert FR citation].	
Sect. .1419	Nitrogen Oxide Budget Trading Program.	7/15/02	[Insert FR citation].	
Sect. .1420	Periodic Review and Reallocations.	7/15/02	[Insert FR citation].	
Sect. .1421	Allocation for New Growth of Major Point Sources.	7/15/02	[Insert FR citation].	
Sect. .1422	Compliance Supplement Pool and Early Emission Reduction Credits.	7/15/02	[Insert FR citation].	
Sect. .1423	Large Internal Combustion Engines.	7/15/02	[Insert FR citation].	

* * * * *

[FR Doc. 02–32562 Filed 12–26–02; 8:45 am]
BILLING CODE 6560–50–P

DEPARTMENT OF HEALTH AND HUMAN SERVICES

Health Resources and Services Administration

45 CFR Part 4

Service of Process: Amendment for Materials Related to Petitions Under the National Vaccine Injury Compensation Program

AGENCY: Health Resources and Services Administration, HHS.

ACTION: Final rule.

SUMMARY: Current regulations regarding service of legal process provide that all service of process relating to petitions for compensation under the National Vaccine Injury Compensation Program (VICP) are to be sent to the Director, Bureau of Health Professions (BHPr), Health Resources and Services Administration (HRSA). Because the Acting Administrator, HRSA has recently reestablished the Division of Vaccine Injury Compensation (DVIC) within the Office of Special Programs (OSP), this final rule amends the regulations regarding service of process to provide that all petitions for compensation under the VICP are to be sent to the Director, Division of Vaccine Injury Compensation, Office of Special Programs, Health Resources and Services Administration. This amendment is purely technical.

DATES: This regulation is effective on January 27, 2003.

FOR FURTHER INFORMATION CONTACT: Thomas E. Balbier, Jr., Director, DVIC, OSP, HRSA, 4350 East West Highway, 10th Floor, Bethesda, Maryland 20814; telephone number: (301) 443–6593. For information about how to file petitions for compensation, contact the Clerk, United States Court of Federal Claims, 717 Madison Place, N.W., Washington, D.C. 20005, telephone number: (202) 219–9657.

SUPPLEMENTARY INFORMATION: 45 CFR 4.6 provides that service of the Secretary's copies of petitions for compensation under the VICP and of related filings are to be served upon the Director, BHPr, which until October 15, 2001, included DVIC. DVIC administers all of the statutory authorities of the Secretary related to the operation of the VICP. On October 15, 2001, the Acting Administrator, HRSA, published in the **Federal Register** a ''Statement of Organization, Functions, and Delegations of Authority (66 FR 52421),'' which set forth organizational changes within BHPr and other organizations within HRSA. Included among those changes was the reorganization of DVIC from BHPr into OSP, HRSA.

Because DVIC has been reorganized from BHPr to OSP within HRSA, the Secretary is amending the regulations governing service of process of materials relating to petitions under the VICP to reflect the appropriate addressee for proper service of such materials.

Justification for Omitting Notice of Proposed Rulemaking

This amendment to 45 CFR 4.6 is a technical amendment to reflect a reorganization of HRSA. Since this is a

technical amendment, related solely to internal Departmental management, the Secretary has determined, under 5 U.S.C. 553 and departmental policy, that it is unnecessary to follow proposed rulemaking procedures.

Economic and Regulatory Impact

Executive Order 12866 directs agencies to assess all costs and benefits of available regulatory alternatives and, when rulemaking is necessary, to select regulatory approaches that provide the greatest net benefits (including potential economic, environmental, public health, safety distributive and equity effects). In addition, under the Regulatory Flexibility Act (RFA), if a rule has a significant economic effect on a substantial number of small entities the Secretary must specifically consider the economic effect of a rule on small entities and analyze regulatory options that could lessen the impact of the rule.

Executive Order 12866 requires that all regulations reflect consideration of alternatives, of costs, of benefits, of incentives, of equity, and of available information. Regulations must meet certain standards, such as avoiding an unnecessary burden. Regulations which are ''significant'' because of cost, adverse effects on the economy, inconsistency with other agency actions, effects on the budget, or novel legal or policy issues, require special analysis.

The Secretary has determined that no resources are required to implement the requirements in this rule. Therefore, in accordance with the RFA of 1980, and the Small Business Regulatory Enforcement Fairness Act of 1996, which amended the RFA, the Secretary certifies that this rule will not have a significant impact on a substantial number of small entities. The Secretary has also determined that this final rule does not meet the criteria for a major rule as defined by Executive Order 12866 and would have no major effect on the economy or Federal expenditures.

The Secretary has further determined that the rule is not a ''major rule'' within the meaning of the statute providing for Congressional review of agency rulemaking, 5 U.S.C. 801. Major rules are those that impose a cost on the economy of $100 million or more a year or have certain other economic impacts. Similarly, it will not have effects on State, local, and tribal governments and on the private sector such as to require consultation under the Unfunded Mandates Reform Act of 1995.

Paperwork Reduction Act of 1995

This regulation is not subject to the Paperwork Reduction Act because it deals solely with internal management of the Department of Health and Human Services.

List of Subjects in 45 CFR Part 4

Courts, vaccine injury petitions.

Dated: November 29, 2002.

Elizabeth M. Duke,

Administrator, Health Resources and Services Administration.

Approved: December 16, 2002.

Tommy G. Thompson,

Secretary.

Accordingly, 45 CFR part 4 is amended as set forth below:

PART 4—SERVICE OF PROCESS

1. The authority citation for 45 CFR part 4 continues to read as follows:

Authority: 5 U.S.C. 301, 42 U.S.C. 300aa-11.

2. Section 4.6 is revised to read as follows:

§ 4.6 Materials related to petitions under the National Vaccine Injury Compensation Program.

Notwithstanding the provisions of §§ 4.1, 4.2, and 4.3, service of the Secretary's copies of petitions for compensation under the VICP and of related filings, by mail, shall be served upon the Director, Division of Vaccine Injury Compensation, Office of Special Programs, Health Resources and Services Administration 5600 Fishers Lane, Parklawn Building, Room 16C–17, Rockville, Maryland 20857, or in person, shall be served upon the Director, Division of Vaccine Injury Compensation, Office of Special Programs, Health Resources and Services Administration, 4350 East West Highway, 10th Floor, Bethesda, Maryland 20814.

[FR Doc. 02–32630 Filed 12–26–02; 8:45 am]

BILLING CODE 4165–15–P

DEPARTMENT OF COMMERCE

National Oceanic and Atmospheric Administration

50 CFR Part 635

[Docket No. 021219321–2321–01; I.D. 120902A]

RIN 0648–AQ39

Atlantic Highly Migratory Species; Commercial Shark Management Measures

AGENCY: National Marine Fisheries Service (NMFS), National Oceanic and Atmospheric Administration (NOAA), Commerce.

ACTION: Emergency rule; request for comments; fishing season notification.

SUMMARY: NMFS issues an emergency rule to: establish the commercial annual quotas for ridgeback and non-ridgeback large coastal sharks (LCS) at 783 metric tons (mt) dressed weight (dw) and 931 mt dw, respectively; establish the commercial annual quota for small coastal sharks (SCS) at 326 mt dw; and suspend the regulation regarding the commercial ridgeback LCS minimum size. These regulations are necessary to ensure that the regulations in force are based on the best available science. In addition, as of January 1, 2003, regulations on season-specific quota adjustments and counting dead discards and state landings after a Federal closure against the commercial quotas will go into effect. At least one public hearing on this emergency rule will be held during the public comment period and will be announced in a separate **Federal Register** document. NMFS also notifies eligible participants of the opening and closing dates for the Atlantic LCS, SCS, pelagic shark, blue shark, and porbeagle shark fishing seasons.

DATES: This emergency rule is effective as of 12:01 a.m., local time, on December 31, 2002, through June 30, 2003.

The fishery opening for ridgeback LCS is effective January 1, 2003, through 11:30 p.m., local time, April 15, 2003. The ridgeback LCS closure is effective from 11:30 p.m., local time, April 15, 2003, through June 30, 2003.

The fishery opening for non-ridgeback LCS is effective January 1, 2003, through 11:30 p.m., local time, May 15, 2003. The non-ridgeback LCS closure is effective from 11:30 p.m., local time, May 15, 2003, through June 30, 2003.

The fishery opening for SCS, pelagic sharks, blue sharks, and porbeagle sharks is effective January 1, 2003, through June 30, 2003, unless otherwise modified or superseded through publication of a closure notice in the **Federal Register**.

Comments on the emergency rule must be received no later than 5 p.m. on February 14, 2003.

ADDRESSES: Written comments on this emergency rule must be mailed to Christopher Rogers, Chief, NMFS Highly Migratory Species Management Division, 1315 East-West Highway, Silver Spring, MD 20910; or faxed to 301–713–1917. Comments will not be accepted if submitted via email or the Internet. Copies of the Environmental Assessment and Regulatory Impact Review prepared for this emergency rule

may be obtained from Karyl Brewster-Geisz at the same address or may be obtained on the web at *http://www.nmfs.noaa.gov/sfa/hmspg.html*.

FOR FURTHER INFORMATION CONTACT: Karyl Brewster-Geisz at 301–713–2347.

SUPPLEMENTARY INFORMATION: The Atlantic shark fisheries are managed under the authority of the Magnuson-Stevens Fishery Conservation and Management Act. The Fishery Management Plan for Atlantic Tunas, Swordfish and Sharks (HMS FMP) is implemented by regulations at 50 CFR part 635.

Since 1997, NMFS has been sued numerous times regarding shark management measures. These lawsuits have come from a variety of user groups including commercial fishermen, recreational fishermen, and environmentalists. In December 2000, NMFS settled two lawsuits with commercial fishermen. The court-approved settlement agreement included, among other things, independent peer-reviews of the 1998 and the new 2002 LCS stock assessments and a commitment to maintain the LCS and SCS quotas at 1997 levels pending the new 2002 assessments. The settlement agreement did not address any regulations affecting the pelagic shark, prohibited species, or recreational shark fisheries.

NMFS received the results of the complete peer reviews of the 1998 LCS stock assessment in October 2001. After reviewing all peer reviews of the 1998 LCS stock assessment, NMFS determined that the projections of the models used in the 1998 LCS stock assessment no longer constituted the best available science. Thus, a number of management measures in the 1999 HMS FMP were no longer appropriate. As a result, NMFS published an emergency rule on December 28, 2001 (66 FR 67118; extended 67 FR 37354, May 29, 2002), that implemented management measures based on the best available science at that time: a combination of landings, discards, and biological data; catch rates; the 1996 LCS stock assessment; and the peer reviews. The December 2001 emergency rule was designed to maintain the status of LCS and SCS pending new stock assessments. In the December 2001 emergency rule, NMFS made a commitment to re-evaluate the management measures promulgated in that emergency rule based on the new stock assessments before any of these measures would be re-implemented. The December 2001 emergency rule expires on December 30, 2002.

Since publication of the December 2001 emergency rule, NMFS has received several new stock assessments. On May 8, 2002, NMFS announced the availability of the first SCS stock assessment since 1992 (67 FR 30879). The Mote Marine Laboratory and the University of Florida provided NMFS with another SCS stock assessment in August 2002. Both these stock assessments indicate that overfishing is occurring on finetooth sharks. The three other species in the SCS complex (Atlantic sharpnose, bonnethead, and blacknose) are not overfished and overfishing is not occurring. Because many management measures for sharks are interrelated, NMFS commenced SCS rulemaking once the LCS assessment was complete.

On October 17, 2002, NMFS announced the availability of the LCS stock assessment (67 FR 64098), which currently constitutes the best available science for LCS. The results of this stock assessment indicate that the LCS complex is still overfished and overfishing is occurring; that sandbar sharks are no longer overfished and that overfishing is still occurring; and that blacktip sharks are rebuilt and overfishing is not occurring. The peer review process for the 2002 LCS stock assessment, required under the above-referenced settlement agreement, is expected to be complete in mid-December. At the time of drafting this emergency rule, the results of the peer reviews were not available to all NMFS staff or the public, and therefore, were not considered.

This action is necessary because, once the December 2001 emergency rule expires, certain measures from the 1999 HMS FMP, which were based on the projections from the 1998 LCS stock assessment, will enter into force unless regulations are promulgated to replace them. As noted above, NMFS determined that portions of the 1998 LCS stock assessment no longer constitute the best available science. Furthermore, NMFS now has updated stock assessments for both LCS and SCS, which constitute the best available science for these complexes. The results of these stock assessments indicate that the status of both LCS and SCS have changed since previous stock assessments. New regulations are needed to reflect this change in status.

NMFS has one objective for this rulemaking: to amend management measures that are no longer be based on the best available science and/or that were implemented in the HMS FMP and later suspended or revised in the December 2001 shark emergency rule. The management measures promulgated in the current rulemaking, along with many other shark management measures implemented in the HMS FMP, will be re-evaluated in an amendment to the HMS FMP, which NMFS announced it would initiate through a Notice of Intent issued on November 15, 2002 (67 FR 69180). Shark management measures that are not addressed in this rulemaking will be evaluated in the amendment to the HMS FMP. Those management measures include, but are not limited to, the recreational retention limits and size limit, the prohibited species, the public display quota, and the commercial trip limits.

At the end of the public comment period for this emergency rule, NMFS will consider all public comments and the peer reviews of the 2002 LCS stock assessment and will amend the measures under the emergency regulations, as appropriate.

Commercial Management Measures

This emergency rule (1) establishes the commercial annual quotas for ridgeback and non-ridgeback large coastal sharks (LCS) at 783 metric tons (mt) dressed weight (dw) and 931 mt dw, respectively; (2) establishes the commercial annual quota for small coastal sharks (SCS) at 326 mt dw; and (3) suspends the regulation regarding the commercial ridgeback LCS minimum size. In addition, as of January 1, 2003, the regulations on season-specific quota adjustments and counting dead discards and state landings after a Federal closure against the commercial quotas will go into effect. This emergency rule does not affect commercial management measures for pelagic sharks, except for counting dead discards or state landings against the quota and seasonal quota adjustments, and does not affect the management measures for prohibited species or recreational fisheries.

NMFS considered other alternatives including implementing the HMS FMP quotas based on the 1998 stock assessment, implementing higher or lower annual LCS quota levels, implementing higher or lower annual SCS quota levels, implementing the ridgeback LCS minimum size, not counting state landings after a Federal closure and dead discards against Federal quotas, and adjusting the semiannual quotas on the subsequent semiannual season rather than the same semiannual season the following year. Based on the results of the 2002 stock assessments and consideration of social and economic impacts on fishermen, NMFS concluded that pending an FMP amendment (expected in 2004), the management measures implemented in

this rule would conserve and maintain the shark stocks while having few adverse impacts on the fishery or the human environment.

Upon completion of the independent peer review process for the 2002 LCS stock assessment and the consideration of comments received during the public comment period for this emergency rule, NMFS will take the appropriate actions to amend these regulations, if necessary, pending an FMP amendment, to ensure the conservation of Atlantic sharks while rebuilding shark stocks and maintaining sustainable fisheries in the long-term.

Annual Landings Quotas

The 2003 annual landings quotas for LCS and SCS are established at 783 mt dw for ridgeback LCS, 931 mt dw for non-ridgeback LCS, and 326 mt dw for SCS. The 2003 quota levels for pelagic, blue, and porbeagle sharks are established at 488 mt dw, 273 mt dw, and 92 mt dw, respectively.

Because the under-harvest of LCS from the first semiannual season of 2002 was already taken into consideration when setting the second semiannual season of 2002 (66 FR 67118, December 28, 2001), that under-harvest will not be carried over for the first semiannual season of 2003. The LCS under-harvest of the second 2002 semiannual season will be considered when setting the LCS quota levels for the second semiannual season of 2003. As such, the LCS quota for the first 2003 semiannual season is 391.5 mt dw for ridgeback LCS and 465.5 mt dw for non-ridgeback LCS. The SCS first semiannual quota for 2003 is established at 163 mt dw. The first 2003 semiannual quotas for pelagic, blue, and porbeagle sharks are established at 244 mt dw, 136.5 mt dw, and 46 mt dw, respectively.

NMFS will take appropriate action before July 1, 2003, in order to determine and announce the second 2003 semiannual quotas for Atlantic sharks.

Fishing Season Notification

The first semiannual fishing season of the 2003 fishing year for the commercial fishery for ridgeback and non-ridgeback LCS, SCS, pelagic sharks, blue sharks, and porbeagle sharks in the western north Atlantic Ocean, including the Gulf of Mexico and the Caribbean Sea, will open January 1, 2003. To estimate the closure dates of the LCS, NMFS used the average catch rates for each species group from the first seasons from recent years (2000, 2001, and 2002) while also considering the reporting dates of permitted shark dealers.

Based on average ridgeback LCS catch rates in recent years, approximately 93 percent of the available ridgeback LCS quota would likely be taken by the second week of April. The end of the second week of any month corresponds with the end of the first of two monthly reporting periods for permitted shark dealers. Accordingly, the Assistant Administrator for Fisheries (AA) has determined that the ridgeback LCS quota for the first 2003 semiannual season will likely be attained by April 15, 2003. Thus, the ridgeback LCS fishery will close April 15, 2003, at 11:30 p.m. local time.

Based on average non-ridgeback catch rates in recent years, approximately 90 percent of the non-ridgeback LCS quota would likely be taken by the second week of May and 98 percent by the last week of May. Because the LCS shark season has not been open in May since 1996, NMFS has difficultly accurately estimating catch rates in May. Because of this, in addition to the high probability that the quota could be taken in the last week of May and because ridgeback LCS would be discarded dead after April 15, NMFS does not believe it is prudent to leave the non-ridgeback LCS fishery open until the end of May. Additionally, NMFS prefers to have shark closure dates correspond with one of the two monthly reporting periods for permitted shark dealers. Accordingly, the AA has determined that the non-ridgeback LCS quota should be closed by May 15, 2003. Thus, the non-ridgeback LCS fishery will close on May 15, 2003, at 11:30 p.m. local time.

When quotas are projected to be reached for the SCS, pelagic, blue, or porbeagle shark fisheries, the AA will file notification of closure at the Office of the **Federal Register** at least 14 days before the effective date.

During a closure, retention of, fishing for, possessing or selling LCS are prohibited for persons fishing aboard vessels issued a limited access permit under 50 CFR 635.4. The sale, purchase, trade, or barter of carcasses and/or fins of LCS harvested by a person aboard a vessel that has been issued a permit under 50 CFR 635.4 are prohibited, except for those that were harvested, offloaded, and sold, traded, or bartered prior to the closure and were held in storage by a dealer or processor.

Comment Period

NMFS is accepting comments regarding this emergency rule through 5 p.m. on February 14, 2003. At least one public hearing on this emergency rule will be held during the public comment period and will be announced in a separate **Federal Register** document. Based on the comments received on this rule and on the results of the peer review of the 2002 LCS stock assessment, NMFS will modify these regulations, as appropriate.

Classification

These emergency regulations are published under the authority of section 305(c) of the Magnuson-Stevens Fishery Conservation and Management Act. The AA has determined that these emergency regulations are necessary to ensure that regulations in force are based on the best available science.

NMFS prepared an Environment Assessment for this emergency rule that describes the impact on the human environment and found that no significant impact on the human environment would result. This emergency rule is of limited duration and, depending on the results of the peer review of the 2002 LCS stock assessment, may be modified to ensure the regulations are based on the best available science. The quota levels established in this rule are based on the best available science at this time - results of the 2002 LCS and SCS stock assessments - and should maintain the status of the stock pending an FMP amendment and, if needed, implementation of a rebuilding plan.

NMFS also prepared a Regulatory Impact Review for this action which assesses the economic costs and benefits of the action. The requirements of this emergency rule establish the annual LCS quota at recent landings levels, including landings by fishermen in state waters. Thus, the annual LCS quota should not have adverse economic impacts on fishermen and may have some economic benefits if the season is lengthened slightly compared to the past few years. Similarly, the requirements of this emergency rule establish an annual SCS quota at the highest SCS landings level and thus, should not have any adverse economic impacts on fishermen. The minimum size requirement on ridgeback LCS has never gone into place and thus, the suspension of the minimum size requirement would not have any economic impacts on fishermen. Counting dead discards and state landings after a Federal closure could have minor adverse economic impacts if fishermen discard a number of sharks or if fishermen fishing in state waters after a Federal closure land a large number of sharks. However, NMFS expects this requirement to have only minor economic impacts, if any, because the suspension of the minimum size requirement minimizes discards until after the fishery closed and because a

number of states now close state waters to shark fishing with Federal waters. The season-specific quota adjustment would not have any economic impact on the fishery as a whole but could have slight economic benefits for fishermen who fish in only one season. The other alternatives considered could have greater economic impacts in part or in combination with other alternatives.

This emergency rule to establish the 2003 landings quotas and other shark management actions has been determined to be not significant for the purposes of Executive Order 12866.

Additionally, the ancillary action announcing the fishing season is taken under 50 CFR 635.27(b) and is exempt from review under Executive Order 12866.

The AA finds that it would be impracticable and contrary to the public interest to provide prior notice of and an opportunity for public comment on this action. The measures in this rule must be in place by January 1, 2003, the opening date for the Atlantic shark fisheries. Otherwise, certain measures that were based on the 1998 LCS stock assessment will go into effect. After reviewing the independent peer reviews of the 1998 LCS assessment, NMFS determined that portions of the 1998 LCS stock assessment did not constitute the best available science. Also, allowing regulations based on the 1998 LCS stock assessment to go into effect would be inconsistent with the terms of a court-approved settlement agreement, which requires NMFS to maintain 1997 LCS quota levels pending completion of a new rulemaking based on the new LCS stock assessment.

NMFS now has updated 2002 stock assessments for both LCS and SCS that constitute the best available science for these species and indicate that the status of both LCS and SCS have changed since the previous stock assessments. However, the 2002 LCS stock assessment did not become available in time to allow for prior notice and an opportunity for public comment on these interrelated LCS and SCS measures. Therefore, because any further delay in implementing new measures, based on the 2002 LCS and SCS stock assessments, will result in regulations based on outdated science going in effect, and a violation of the settlement agreement, the AA finds good cause under 5 U.S.C. 553(b)(B) to waive prior notice and the opportunity for public comment.

For the above reasons and because this action relieves restrictions (i.e., increases LCS quotas and suspends a minimum size requirement), the AA also finds good cause under 5 U.S.C. 553(d)(3) not to delay for 30 days the effectiveness of this emergency rule. Additionally, NMFS can rapidly communicate these regulations to fishing interests through the HMS Fax network, NOAA weather radio, press releases, mailing lists, and the HMS infoline.

Because no general notice of proposed rulemaking is required to be published in the **Federal Register** for this emergency rule by 5 U.S.C. 553 or by any other law, the analytical requirements of the Regulatory Flexibility Act, 5 U.S.C. 601 *et seq.*, do not apply; thus, no Regulatory Flexibility Analysis was prepared. Nevertheless, as described above, NMFS prepared an economic analysis as part of the regulatory impact review for this emergency rule. Based on this economic analysis, NMFS does not believe that the requirements of this rule would have any adverse economic impacts on fishermen or small entities.

List of Subjects in 50 CFR Part 635

Fisheries, Fishing, Fishing Vessels, Foreign relations, Intergovernmental relations, Penalties, Reporting and recordkeeping requirements, Statistics, Treaties.

Dated: December 20, 2002.

William T. Hogarth,

Assistant Administrator for Fisheries, National Marine Fisheries Service.

For the reasons set out in the preamble, 50 CFR part 635 is amended as follows:

PART 635—ATLANTIC HIGHLY MIGRATORY SPECIES

1. The authority citation for 50 CFR part 635 continues to read as follows:

Authority: 16 U.S.C. 971 *et seq.*; 16 U.S.C. 1801 *et seq.*

§ 635.20 [Amended]

2. In § 635.20, paragraph (e)(1) is suspended.

3. In § 635.27, paragraphs (b)(1)(i) and (b)(1)(ii) are suspended, and paragraphs (b)(1)(v) and (b)(1)(vi) are added to read as follows:

§ 635.27 Quotas.

* * * * *

(b) * * *

(1) * * *

(v) *Large coastal sharks.* The annual commercial quota for large coastal sharks is 1,714 mt dw, apportioned between ridgeback and non-ridgeback sharks and divided between two equal semiannual fishing seasons, January 1 through June 30, and July 1 through December 31. The length of each season will be determined based on the projected catch rates, available quota, and other relevant factors. NMFS will file with the Office of the **Federal Register** for publication notification of each season's length at least 30 days prior to the beginning of the season. The quotas for each semiannual fishing season (unless otherwise specified in the **Federal Register** as provided in paragraph (b)(1)(iv) of this section) are as follows:

(A) Ridgeback shark 391.5 mt dw.

(B) Non-ridgeback shark 465.5 mt dw.

(vi) *Small coastal sharks.* The annual commercial quota for small coastal shark is 326 mt dw, (unless otherwise specified in the **Federal Register** as provided in paragraph (b)(1)(iv) of this section) divided between two equal semiannual seasons, January 1 through June 30, and July 1 through December 31. The quota for each semiannual season is 163 mt dw.

* * * * *

4. In § 635.28, paragraphs (b)(1) and (b)(2) are suspended, and paragraphs (b)(4) and (b)(5) are added to read as follows:

§ 635.28 Closures.

* * * * *

(b) * * *

(4) The commercial fishery for large coastal sharks will remain open for fixed semiannual fishing seasons, as specified at § 635.27(b)(1)(v). From the effective date and time of a season closure until additional quota becomes available, the fishery for large coastal sharks is closed, and sharks of that species group may not be retained on board a fishing vessel issued a commercial permit pursuant to § 635.4.

(5) When a semiannual quota for small coastal sharks or pelagic sharks specified in § 635.27(b)(1)(vi) and (b)(1)(iii) is reached, or is projected to be reached, NMFS will file with the Office of the **Federal Register** for publication a notice of closure at least 14 days before the effective date. From the effective date and time of the closure until additional quota becomes available, the fishery for the appropriate shark species group is closed, and sharks of that species group may not be retained on board a fishing vessel issued a commercial permit pursuant to § 635.4.

* * * * *

[FR Doc. 02–32617 Filed 12–26–02; 8:45 am]

BILLING CODE 3510–22–S

DEPARTMENT OF COMMERCE

National Oceanic and Atmospheric Administration

50 CFR Part 648

Fisheries of the Northeastern United States; Atlantic Mackerel, Squid, and Butterfish Fisheries; Closure of Directed Fishery for *Loligo* Squid

AGENCY: National Marine Fisheries Service (NMFS), National Oceanic and Atmospheric Administration (NOAA), Commerce.

ACTION: Directed fishery closure.

SUMMARY: NMFS announces that the directed fishery for *Loligo* squid in the exclusive economic zone (EEZ) will be closed effective December 24, 2002, through December 31, 2002. Vessels issued a Federal permit to harvest *Loligo* squid may not retain or land more than 2,500 lb (1.13 mt) of *Loligo* squid per trip for the remainder of the year. This action is necessary to prevent the fishery from exceeding its 2002 quota and allow for effective management of this stock.

DATES: Effective 0001 hours, December 24, 2002, through December 31, 2002.

FOR FURTHER INFORMATION CONTACT: Paul H. Jones, Fishery Policy Analyst, 978–281–9273, fax 978–281–9135, e-mail paul.h.jones@noaa.gov.

SUPPLEMENTARY INFORMATION: Regulations governing the *Loligo* squid fishery are found at 50 CFR part 648. The regulations require specifications for maximum sustainable yield, initial optimum yield, allowable biological catch, domestic annual harvest (DAH), domestic annual processing, joint venture processing and total allowable levels of foreign fishing for the species managed under the Atlantic Mackerel, Squid, and Butterfish Fishery Management Plan. The procedures for setting the annual initial specifications are described in § 648.21.

The 2002 specification of DAH for Loligo squid was set at 16,898 mt (67 FR 3623, January 25, 2002). This amount is allocated by quarter, as shown below.

TABLE. 1 LOLIGO QUARTERLY ALLOCATIONS.

I (Jan-Mar)	33.23	5,615
II (Apr-Jun)	17.61	2,976
III (Jul-Sep)	17.30	2,923
IV (Oct-Dec)	31.86	5,384
Total	100.00	16,898

Section 648.22 requires NMFS to close the directed *Loligo* squid fishery in the EEZ when 80 percent of the quarterly allocation is harvested in Quarters I, II and III, and when 95 percent of the total annual DAH has been harvested. NMFS is further required to notify, in advance of the closure, the Executive Directors of the Mid-Atlantic, New England, and South Atlantic Fishery Management Councils; mail notification of the closure to all holders of *Loligo* squid permits at least 72 hours before the effective date of the closure; provide adequate notice of the closure to recreational participants in the fishery; and publish notification of the closure in the **Federal Register**. The Administrator, Northeast Region, NMFS, based on dealer reports and other available information, has determined that 95 percent of the total DAH for *Loligo* squid has been harvested. Therefore, effective 0001 hours, December 24, 2002, the directed fishery for Loligo squid is closed and vessels issued Federal permits for *Loligo* squid may not retain or land more than 2,500 lb (1.13 mt) of *Loligo*. Such vessels may not land more than 2,500 lb (1.13 mt) of *Loligo* during a calendar day. The directed fishery will reopen effective 0001 hours, January 1, 2003, when the 2003 quota becomes available.

Classification

This action is required by 50 CFR part 648 and is exempt from review under E.O. 12866.

Authority: Authority: 16 U.S.C. 1801 *et seq.*

Dated: December 20, 2002.

Bruce C. Morehead,

Acting Director, Office of Sustainable Fisheries, National Marine Fisheries Service.

[FR Doc. 02–32615 Filed 12–20–02; 4:09 pm]

BILLING CODE 3510–22–S

DEPARTMENT OF COMMERCE

National Oceanic and Atmospheric Administration

50 CFR Part 648

[Docket No. 020215032–2127 02; I.D. 121702A]

Fisheries of the Northeastern United States; Atlantic Bluefish Fishery; Commercial Quota Transfers

AGENCY: National Marine Fisheries Service (NMFS), National Oceanic and Atmospheric Administration (NOAA), Commerce.

ACTION: Commercial quota transfers.

SUMMARY: NMFS announces that the State of North Carolina has transferred 43,000 lb (19,504.5 kg) of its 2002 commercial quota to the State of Maryland; and the Commonwealth of Massachusetts has transferred 150,000 lb (68,038.9 kg) of its 2002 commercial quota to the State of New York. The revised quotas for the calendar year 2002 following the transfer are: North Carolina, 3,323,384 lb (1,507,461.6 kg); Maryland, 315,400 lb (143,063.0 kg); Massachusetts, 555,254 lb (251,859.0 kg); and New York, 1,449,372 lb (657,424.1 kg). NMFS has adjusted the quotas and announces the revised commercial quotas. This action is permitted under the regulations implementing the Fishery Management Plan for the Bluefish Fishery (FMP) and is intended to prevent negative economic impacts to the Maryland and New York commercial bluefish fisheries.

DATES: Effective December 26, 2002 through December 31, 2002.

FOR FURTHER INFORMATION CONTACT: Hannah Goodale, Fishery Policy Analyst, (978) 281–9101, fax (978)281–9135, e-mail Hannah.F.Goodale@noaa.gov.

SUPPLEMENTARY INFORMATION: Regulations governing the Atlantic bluefish fishery are found at 50 CFR part 648. The regulations require annual specification of a commercial quota that is apportioned among the coastal states from Maine through Florida. The process to set the annual commercial quota and the percent allocated to each state is described in § 648.160.

The FMP allows two or more states, under mutual agreement and with the concurrence of the Administrator, Northeast Region, NMFS, to transfer or combine part or all of their annual commercial bluefish quotas. The Regional Administrator must consider the criteria set forth in § 648.160(f)(1) in the evaluation of requests for quota transfers or combinations.

The total commercial quota for bluefish for the 2002 calendar year was set equal to 10,500,000 lb (4,762,720 kg) (66 FR 23625, May 9, 2002). The resulting quotas for North Carolina and Maryland were 3,366,384 (1,526,966 kg), and 315,189 lb (142,967 kg), respectively. Effective, October 8, 2002, (67 FR 62650) Maryland's quota was reduced by 42,789 lb (19,408.8 kg) to 272,400 lb (123,558.6 kg). North Carolina has agreed to transfer 43,000 lb (19,504.5 kg) to Maryland. The revised quotas for the calendar year 2002 following the transfer are: North Carolina, 3,323,384 (1,507,461.6 kg) and Maryland, 315,400 lb (143,063.0 kg).

The initial 2002 commercial quotas for Massachusetts and New York were 705,254 lb (319,897.8 kg) and 1,090,436 lb (494,613.4 kg), respectively. Effective

September 12, 2002, (67 FR 57758) New York's quota was reduced by 216,064 lb (98,033 kg) to 874,372 lb (396,721 kg). Effective October 10, 2002, (67 FR 63311) New York's quota was increased as the result of a quota transfer by 425,000 lb (192,776.8 kg) to 1,299,372 lb (589,284 kg). Massachusetts has agreed to transfer 150,000 lb (68,038.8 kg) of its 2002 commercial quota to New York. The revised quotas for the calendar year 2002 are: Massachusetts, 555,254 lb (251,859.0 kg) and New York, 1,449,372 lb (657,424.1 kg).

The Regional Administrator has determined that the criteria set forth in § 648.160(f)(1) have been met. This action does not alter any of the conclusions reached in the environmental assessment for the 2002 specifications for the Atlantic bluefish fishery. This is a routine administrative action that reallocates commercial quota within the scope of previously published environmental analyses.

Classification

This action is taken under 50 CFR part 648 and is exempt from review under E.O. 12866.

Authority: Authority: 16 U.S.C. 1801 *et seq.*

Dated: December 18, 2002.

Bruce C. Morehead,

Acting Director, Office of Sustainable Fisheries, National Marine Fisheries Service.

[FR Doc. 02–32619 Filed 12–26–02; 8:45 am]

BILLING CODE 3510–22–S

Proposed Rules

Federal Register
Vol. 67, No. 249
Friday, December 27, 2002

This section of the FEDERAL REGISTER contains notices to the public of the proposed issuance of rules and regulations. The purpose of these notices is to give interested persons an opportunity to participate in the rule making prior to the adoption of the final rules.

NATIONAL CREDIT UNION ADMINISTRATION

12 CFR Parts 703 and 742

Investment and Deposit Activities and Regulatory Flexibility Program

AGENCY: National Credit Union Administration (NCUA).

ACTION: Proposed rule with request for comments.

SUMMARY: NCUA proposes to amend its rule regarding the investment activities of federal credit unions (FCUs). The amendments clarify and reformat the rule to make it easier to read and locate information. The amendments expand FCU investment authority to include purchasing equity-linked options for certain purposes and exempts RegFlex eligible credit unions from several investment restrictions. NCUA also proposes to expand the Regulatory Flexibility Program to conform to the proposed revisions to the investment rule.

DATES: Comments must be received on or before February 25, 2003.

ADDRESSES: Direct comments to Becky Baker, Secretary of the Board. Mail or hand-deliver comments to: National Credit Union Administration, 1775 Duke Street, Alexandria, Virginia 22314–3428. You are encouraged to fax comments to (703) 518–6319, or E-mail comments to *regcomments@NCUA.gov* instead of mailing or hand-delivering them. Whatever method you choose, please send comments by one method only.

FOR FURTHER INFORMATION CONTACT: Scott Hunt, Senior Investment Officer, Office of Strategic Program Support and Planning (OSPSP) at the above address or telephone (703) 518–6620; Dan Gordon, Senior Investment Officer, OSPSP at the above address or telephone (703) 518–6620; Kim Iverson, Program Officer, Office of Examination and Insurance, at the above address or telephone (703) 518–6360; or Frank Kressman, Staff Attorney, Office of General Counsel, at the above address or telephone (703) 518–6540.

SUPPLEMENTARY INFORMATION:

A. Background

NCUA identified part 703 as in need of revision. To that end, NCUA issued an advanced notice of proposed rulemaking (ANPR) on October 18, 2001. 66 FR 54168 (October 26, 2001). In the ANPR, NCUA solicited comments as to how it could revise part 703 to make it easier to understand. The ANPR also solicited comments as to how NCUA could provide FCUs with greater flexibility and enhanced investment authorities without sacrificing safety and soundness. NCUA received thirty-eight comment letters: fifteen from FCUs, two from state credit unions, eleven from financial services entities, nine from credit union trade organizations, and one from a banking trade organization. The comments were generally supportive of the ANPR, except for those offered by the banking trade organization. As discussed more fully below, the commenters offered numerous suggestions of ways part 703 could be improved. NCUA has considered these comments, and other issues that have arisen since the ANPR was issued, and is issuing this proposal to amend part 703.

B. Discussion

1. Broker-Dealer Requirements

Section 703.50(a) describes the minimum criteria a broker-dealer must meet for an FCU to conduct business with a broker-dealer. 12 CFR 703.50(a). In general, it requires FCUs to use broker-dealers that are registered with the Securities and Exchange Commission or depository institutions whose broker-dealer activities are regulated by a federal regulatory agency. NCUA believes depository institutions whose broker-dealer activities are regulated by a state regulatory agency are supervised to a similar degree as those regulated by a federal agency. Accordingly, in proposed § 703.8, NCUA proposes to amend this provision to permit FCUs to also use the services of depository institutions whose broker-dealer activities are regulated by a state regulatory agency. This will provide FCUs with greater access to broker-dealers.

NCUA has become increasingly aware of circumstances where broker-dealers have engaged in deceptive practices in the sale of CDs to FCUs, such as misrepresenting yields, providing misleading information about the terms of the CD, and inducing purchases of unsuitable and impermissible CDs. Some FCUs have asked NCUA to intervene and pursue remedies on their behalf in these circumstances.

In recent years, NCUA has issued three Letters to Credit Unions to warn credit unions about the risks associated with certain brokered CDs: 00–CU–05, Investment in Brokered Certificates of Deposit, September 2000; 01–FCU–04, Broker Registration/Short-Term Investments, April 2001; and 01–CU–23, Investments in Brokered Certificates of Deposit sold By Bentley Financial Services, Inc. and Entrust Group, December 2001. NCUA has also issued Interpretive Ruling and Policy Statement 98–2, Supervisory Policy Statement on Investment Securities and End-User Derivatives Activities, which describes best practices when making investment decisions. Despite these efforts, NCUA believes further regulatory action is necessary to address the problems associated with brokered CDs.

The ANPR asked whether setting minimum standards for broker-dealers would help prevent deceptive practices by broker-dealers. The ANPR contemplated requiring broker-dealers to have at least one General Securities Representative registered with the National Association of Securities Dealers (NASD). Alternatively, if a depository institution wishes to transact purchases and sales of investments with an FCU, its broker-dealer activities would have to be regulated by a federal or state regulatory agency. The ANPR further suggested that an individual broker-dealer might also have to be registered with the NASD as a General Securities Representative, whether the individual broker-dealer works with a brokerage firm or a federal or state regulated depository institution. NCUA was not contemplating imposing these standards on a broker-dealer acting only as a CD finder. A CD finder provides information about CD offering rates and terms, but does not take custody of the funds or the investment at any time.

Twenty-eight commenters responded to NCUA's statement that it was considering more clearly defining minimum criteria a broker-dealer must

meet for an FCU to buy or sell investments through that broker-dealer. Twenty-one commenters supported NCUA's efforts to clarify and set minimum standards for broker-dealers. In general, the commenters viewed the registration requirements as prudent and did not believe they would significantly impair an FCU's ability to conduct investment activities. Four commenters supported NCUA's intention to provide guidelines to help FCUs make their own evaluation of a broker-dealer's qualifications, but were not in favor of NCUA setting rigid standards. One commenter not only supported NCUA setting the standards, but called for a more restrictive approach than that suggested by the ANPR. One commenter stated the current rule does not need to be changed. The banking trade group commented that it would be unfair for the NCUA to require individual broker-dealers working for a depository institution to be registered with the NASD as a General Securities Representative. It explained that the nature of their employment with the depository institution and NASD rules preclude those individuals from complying with the contemplated registration requirement.

In certain cases, broker-dealer's deceptive practices have caused losses in credit unions, but it is not clear that additional standards on broker-dealers such as those suggested in the ANPR, would have prevented those losses. NCUA has determined that the existing rules represent prudent minimum criteria that a broker-dealer must meet for a credit union to purchase and sell investments through the broker-dealer.

The Board believes that education is the key to mitigating risk by improving credit unions' due diligence regarding the selection and monitoring of brokers-dealers. For this reason, the broker-dealer rules have not been revised to require more stringent broker-dealer requirements. However, NCUA will continue to provide guidance to the industry.

2. Safekeeper Requirements

An FCU may only use the services of a safekeeping firm that meets the minimum criteria provided for in § 703.60. 12 CFR 703.60. A safekeeper secures the FCU's ownership interest in investments without an FCU having to register the securities in its name or take physical possession of investment documents. Safekeepers that do not operate scrupulously, independently from broker-dealers, or under sufficient supervisory oversight can pose a risk to FCUs. NCUA's primary concern about safekeeper activities is in the brokered CD context. NCUA is aware of instances where a safekeeper, working with an unscrupulous broker-dealer, aided the broker-dealer in misleading the FCU about the terms and characteristics of brokered CDs or otherwise failed to fulfill its fiduciary responsibilities. NCUA is not aware of any problems with the safekeeping of other securities such as securities issued by the U.S. Department of the Treasury and other authorized credit union investments. The ANPR suggested the possibility of expanding the current safekeeping requirements to address this problem.

Twenty-six commenters responded to NCUA's statement that it was considering limiting permissible safekeepers to clearing broker-dealers regulated by the Securities and Exchange Commission or depository institutions regulated by a state or federal agency. Twenty-one commenters supported this position. Five commenters were in favor of minimizing risk associated with safekeepers, but did not support the approach contemplated by the ANPR. These commenters preferred allowing FCUs to make their own evaluations of the qualifications of their safekeepers, but supported NCUA guidelines to help FCUs make those determinations. Three commenters wanted to replace depository institutions regulated by a state or federal agency with financial institutions regulated by a state or federal agency to increase the universe of eligible safekeepers.

NCUA has concluded that the more stringent safekeeper standards contemplated in the ANPR would not effectively address the problems associated with brokered CDs. NCUA believes federal credit unions are best served by conducting thorough evaluations of safekeeping firms prior to doing business with them. The current rule requires a federal credit union to investigate a safekeeper's background to determine the safekeeper's reputation and compliance with laws and regulations. The NCUA Board is proposing to add a due diligence requirement that a federal credit union review the safekeeper's financial condition as well. Ascertaining the safekeeper's financial capacity to fulfill its custodial responsibilities is a sound business practice. NCUA will also emphasize education and understanding in the industry. In this regard, NCUA will continue to issue guidance to credit unions and promote due diligence reviews of safekeepers.

Several commenters suggested that NCUA expand permissible safekeepers to include state-regulated trust companies, which are entities created for the purpose of meeting the fiduciary needs of their clients and customers and are subject to regular examinations. NCUA agrees with this suggestion and, in proposed § 703.9, NCUA proposes to permit state-regulated trust companies to be safekeepers for FCUs. In addition, in proposed § 703.4, NCUA proposes to require FCUs to retain the documentation their boards of directors used to approve the use of a safekeeper in the same manner and to the same extent this must be done in the broker-dealer context.

3. Expanded Investment Authorities

The Federal Credit Union Act (Act) enumerates FCU investment powers. 12 U.S.C. 1757. NCUA has adopted regulatory prohibitions against certain investments and investment activities permitted by the Act on the basis of safety and soundness concerns. 12 CFR 703.100 and 703.110. Investments and investment activities prohibited by regulation include financial derivatives, stripped mortgage-backed securities, residual interests in collateralized mortgage obligations/real estate mortgage investment conduits (CMOs/REMICs), commercial mortgage or small business related securities, mortgage servicing rights, short sales, adjusted trading, and variable rate products with indexes tied to foreign interest rates.

The ANPR solicited comments regarding granting FCUs expanded investment authority and possible methods of doing so. Fifteen commenters supported expanded investment authority for FCUs that demonstrate, through an application process, the expertise to manage a particular investment product. Ten commenters supported expanded authority, but objected to an FCU having to apply to NCUA each time it wished to add a new investment product to its portfolio. Five commenters suggested an FCU's CAMEL rating should determine its level of expanded authorities and its application requirements. Many of the commenters noted specific investment products they would like to have available, but there was no discernable consensus in that regard. Two commenters were opposed to granting any expanded investment authority to FCUs.

Section 107(15)(B) of the Act, 12 U.S.C. 1757(15)(B), permits FCUs to purchase mortgage related securities as that term is defined in Section 3(a)(41) of the Securities Exchange Act of 1934. 15 U.S.C. 78c(a)(41). That definition includes mortgage related securities backed solely by residential mortgages, solely by commercial mortgages

(Commercial Mortgage Related Securities or CMRS), and mixed residential and commercial mortgages. Generally speaking, section 107(7)(E) of the Act permits FCUs to purchase investments issued, guaranteed, or sold by government agencies, government corporations and other government enterprises. 12 U.S.C. 1757(7)(E). Although section 107(15)(B) and section 107(7)(E) permit different kinds of investments for FCUs, there is some overlap between the two. Specifically, some CMRS described in section 107(15)(B) also fit the description of investments permitted by section 107(7)(E).

Part 703 currently prohibits the purchase of section 107(15)(B) CMRS that are not otherwise permitted by section 107(7)(E). This is because when part 703 was last revised, the CMRS market was not well established, and NCUA had concerns about liquidity and performance of the market. This market has since grown and seasoned to a point where NCUA believes an expansion of FCU authority in this context is justified. Accordingly, NCUA proposes to permit Regulatory Flexibility Program (RegFlex) eligible FCUs to purchase CMRS, that are not otherwise permitted by section 107(7)(E), subject to certain safety and soundness related restrictions. Specifically, a RegFlex eligible FCU may purchase CMRS, that are not otherwise permitted by section 107(7)(E), if the CMRS: (1) Are rated in one of the two highest rating categories by at least one nationally-recognized statistical rating organization; (2) otherwise meet the definitions of mortgage related security as defined in 15 U.S.C. 78c(a)(41) and commercial mortgage related security as defined in proposed section 703.2 and (3) have an underlying pool of loans containing more than 50 loans with no one loan representing more than 10 percent of the pool. A RegFlex eligible FCU is limited to purchasing CMRS that are not otherwise permitted by section 107(7)(E) up to 50 percent of its net worth in the aggregate. As with all investments, FCUs should develop written policies and an understanding of the risks associated with CMRS before purchasing them.

NCUA believes the investment pilot program is the most appropriate system for evaluating and granting expanded investment authority to FCUs. The pilot program's application and approval process gives an FCU the opportunity to demonstrate it has the ability to implement and administer safely an investment activity prohibited by regulation. Not only does the investment pilot program provide flexibility to FCUs, but it is also a useful tool for NCUA to evaluate whether granting additional investment authorities is appropriate. This approach allows NCUA to analyze an FCU's management's abilities and knowledge, and understand how an FCU plans to incorporate an investment activity into its overall investment and risk management strategies. In this regard, NCUA encourages those credit unions that possess the necessary knowledge and expertise to administer investments or investment activities currently prohibited by the regulation, but permitted by the FCU Act (e.g., the purchase of MSRs from other credit unions, stripped mortgage-backed securities) to apply for expanded powers through the pilot program.

Although the purchase of mortgage servicing rights remains an impermissible investment, the proposed rule recognizes that a credit union, as a financial service to a member that is engaged in making mortgage loans, may perform servicing for a member's mortgage loans. For this activity to be permissible as a financial service to a member, the member must continue to own the loan during the time that the credit union provides servicing. In this context, the NCUA Board concludes that providing mortgage servicing is an appropriate exercise of a credit union's incidental powers to provide financial service to a member.

To expedite the investment pilot program application and approval process, NCUA will make available guidelines for participation in approved investment pilot programs. These guidelines will be available on the NCUA website or by contacting the appropriate NCUA regional office. NCUA expects these guidelines will help FCUs better understand NCUA's criteria and will enable FCUs to submit more complete applications. These guidelines may also help FCUs determine where they may need to improve their infrastructure, resources, or knowledge before beginning the application process. Additionally, investment pilot program applicants are encouraged to submit alternative guidelines for NCUA's consideration. NCUA will make minor revisions to the proposed § 703.19 investment pilot program to clarify it and reflect this discussion.

On October 25, 2002, NCUA issued a final rule revising part 704 of its rules regarding corporate credit unions. 67 FR 65640 (October 25, 2002). As part of that final rule, NCUA also revised § 703.100(c). 12 CFR 703.100(c). Specifically, NCUA increased the limit on an FCU's purchase of paid-in capital and membership capital in one corporate to 2 percent of the FCU's assets and 4 percent for purchases in all corporates. The below revisions in proposed § 703.14 conform to the final revisions made in October 2002.

On September 19, 2002, NCUA issued a proposed rule regarding federally-insured credit unions branching outside the United States. 67 FR 60607 (September 26, 2002). In that proposal, NCUA recognized that part 703 may not permit sufficient investment tools for FCUs to manage currency rate risk and other risks associated with conducting business in foreign countries. NCUA has determined that FCUs with foreign branches may apply to NCUA for expanded investment authority to address those risks under the investment pilot program.

4. Discretionary Control of Investments

Section 703.40(c)(6) authorizes an FCU to delegate to an outside third party discretionary control over the purchase and sale of investments up to 100 percent of an FCU's net capital at the time of delegation. 12 CFR 703.40(c)(6). RegFlex. exempts FCUs meeting specific eligibility requirements from the § 703.40(c)(6) cap. 12 CFR 742.4. The ANPR solicited comments on whether this cap should be raised for all FCUs and under what circumstances. Eleven commenters supported raising the cap and did not object to NCUA requiring FCUs to meet certain minimum standards or seek prior approval to exceed the cap. Six commenters supported raising the cap but did not favor a process requiring prior agency approval. Rather, some of these commenters preferred NCUA setting guidelines that an FCU could follow and requiring only that an FCU notify the NCUA when it exceeds the cap. One of these commenters recommended setting minimum standards for investment managers to whom FCUs entrust discretionary control. Nine commenters opposed raising the cap.

NCUA believes that it would not be prudent to raise the cap on discretionary control of investments for all FCUs. NCUA believes that the exemption from this cap for RegFlex eligible FCUs is sufficient relief at this time. NCUA wishes to clarify that the cap on delegating discretionary control over the purchase and sale of investments is not applicable to the purchase or sale of mutual funds.

The Board also believes it is prudent that the cap be evaluated annually so that the amount of investments under discretionary control does not exceed the credit union's net worth subsequent

to the original delegation of investment authority. Therefore, the Board has added the requirement that, should the amount of investments under discretionary control exceed the net worth cap at the time of the annual evaluation, the federal credit union's board of directors must receive notice as soon as possible, but no later than the next regularly scheduled board meeting. The board of directors must notify the appropriate regional director within 5 days after the board meeting. The FCU must also develop a plan to bring the credit union into compliance with the cap. The plan does not need to require divestiture of the investments, but the credit union must be brought back into compliance within a reasonable period of time.

5. Investment Credit Ratings

Currently, an FCU must conduct a credit analysis for any investment that is not issued by or fully guaranteed as to principal and interest by the U.S. government or its agencies, enterprises, or corporations, or fully insured by the NCUA or the Federal Deposit Insurance Corporation. 12 CFR 703.40(d). FCUs are not required to express credit exposure in terms of risk to capital and, except for municipal bonds and privately issued mortgage related securities, FCUs are not required to obtain or monitor credit ratings on the issue or issuer. The ANPR solicited comments as to whether standards should be set.

Six commenters supported NCUA setting regulatory standards for evaluating investment credit risk. Fourteen commenters opposed regulatory standards, but supported NCUA guidelines to assist FCUs in assessing credit risk on their own without hampering their ability to manage their investments according to their individual risk management capabilities. Six commenters suggested that, unless an investment is fully insured or guaranteed by the U.S. government or its agencies, it should only be permissible for FCUs if it meets certain minimum credit ratings as established by a national rating organization such as Moody's or Standard and Poor's. NCUA has determined that the current rule sufficiently encourages FCUs to adopt prudent credit review practices and that no revisions are necessary at this time. Further, if NCUA established specific, minimum criteria such as credit ratings and capital-at-risk levels, it might encourage credit unions to forsake other prudent credit evaluation practices, for example, monitoring pertinent current events and news stories or reviewing financial statements.

6. Borrowing Repurchase Transaction

Borrowing repurchase transactions, presently referred to as reverse repurchase transactions in § 703.100(j), enable an FCU to sell securities under an agreement to repurchase in order to borrow funds. 12 CFR 703.100(j). Section 703.100(j)(2) prohibits an FCU from purchasing an investment with the proceeds from a borrowing repurchase agreement if the purchased investment matures after the maturity of the borrowing repurchase agreement. 12 CFR 703.100(j)(2). Before this restriction, FCUs could incur significant interest rate risk by borrowing funds at short-term interest rates and investing in long-term fixed rate instruments. Problems can result when the spreads between short-term and long-term rates narrow, adversely affecting earnings and capital. NCUA has not imposed similar prohibitions for other borrowing arrangements. For example, if an FCU borrows funds without engaging in a borrowing repurchase agreement, it is not limited by the maturity limit of § 703.100(j)(2) when it invests the proceeds.

The ANPR solicited comments on whether removing this restriction would raise liquidity or safety and soundness concerns and whether an approval process is preferable to removing the restriction. Twenty commenters supported NCUA removing the maturity limit restriction on borrowing repurchase transactions without imposing on FCUs a prior approval requirement. Three commenters stated they did not want the restriction removed.

One of the commenters that opposed removing the restriction stated there are risks associated with this kind of activity and there should be regulatory limitations to mitigate that risk. That commenter further stated that borrowing repurchase transactions are typically used for positive arbitrage opportunities. Interest rate risk is created if the proceeds of the transaction are invested significantly shorter or longer than the borrowing transaction.

The NCUA agrees with this commenter and intends to leave in place the prohibition on purchasing an investment with the proceeds from a borrowing repurchase transaction if the purchased investment matures after the maturity of the borrowing repurchase transaction. To increase flexibility for qualified credit unions, however, the NCUA proposes to expand RegFlex in proposed § 742.4 to include a limited exemption from this restriction. Specifically, RegFlex eligible FCUs will be able to purchase securities with maturities exceeding the maturity of the borrowing repurchase transaction in an amount not to exceed the credit union's net worth.

7. Investment Repurchase Transaction

Section 703.100(i) defines repurchase transactions. 12 CFR 703.100(i). The proposed rule renames them ''investment repurchase transactions'' and conforms the requirements for investment repurchase transactions to those of securities lending transactions. Other than these revisions, the proposal does not make any substantive amendments in this regard.

8. Securities Lending Transaction

Section 703.100(k) addresses securities lending transactions and requires the FCU to take a perfected first priority security interest in all collateral the FCU receives. 12 CFR 703.100(k). Proposed § 703.13 removes the word ''perfected'', but still requires a first priority security interest through possession or control of the collateral. Often, under state law, possession or control of collateral constitutes a perfected security interest. In addition, the proposed rule clarifies that an FCU's agent may act in its place in these transactions.

9. Purchase of Equity-linked Options

Although § 703.110(a) prohibits FCUs from purchasing financial derivatives, including options, 12 CFR 703.110(a), NCUA has approved an investment pilot program permitting a vendor to act as agent for an FCU to purchase equity-linked options for limited purposes. Specifically, under the pilot program, an FCU may offer share certificates where the dividend rate is tied to the performance of the S&P 500 stock index and may purchase equity-linked options to fund the dividend. NCUA has placed limitations on the pilot program to minimize risk and continues to prohibit FCUs from investing in options for their own accounts.

Because of the positive experience with the pilot program, the ANPR stated that NCUA was considering amending the investment regulation to make the purchase of equity-linked options a permissible investment activity for FCUs for the limited purpose of funding equity-linked dividends. The ANPR discussed potential regulatory limitations to this new authority and solicited comments. Fourteen commenters supported FCUs being permitted to purchase equity-linked options for the purpose of offering equity-linked dividends to their

members and also supported the limitations suggested by NCUA. Two commenters opposed FCUs being given permission to purchase equity-linked options.

Proposed § 703.14 expands permissible investment activities for all FCUs to permit them to purchase equity-linked options for the sole purpose of offering equity-linked dividends to their members, subject to limitations including: (1) Maximum shares permitted in the program; (2) minimum counterparty rating; (3) collateral requirements; (4) option proceeds to fund dividend costs only; (5) final maturity of the options coincide with the maturity of the share account; and (6) minimum monthly reporting requirements. FCUs are still prohibited from investing in options for their own accounts.

10. Investment Advisers

Section 703.40(c)(2) currently requires an FCU to analyze an investment adviser's background, including whether there are any enforcement actions against the adviser or the adviser's associated personnel before transacting business with the adviser. 12 CFR 703.40(c)(2). NCUA proposes to amend this provision to clarify that, as part of this background check, an FCU should analyze the background of the firm for whom the investment adviser works, in addition to the investment adviser and associated personnel.

11. Recordkeeping and Generally Accepted Accounting Principles

The Act provides that the accounting principles applicable to reports or statements required to be filed with the NCUA by insured credit unions, except those with total assets of less than $10 million, must be uniform and consistent with generally accepted accounting principles (GAAP). 12 U.S.C. 1782a(a)(6)(C). The accounting standard required in § 703.40(a) only requires FCUs to classify their securities as hold-to-maturity, available-for-sale, or trading, in accordance with GAAP. 12 CFR 703.40(a). Accordingly, in proposed § 703.4, NCUA proposes to revise that rule to clarify that FCUs having total assets of $10 million or more must comply with all GAAP provisions related to the accounting principles applicable to reports or statements required to be filed with the NCUA, not just selected ones. While not mandatory for FCUs with total assets of less than $10 million, NCUA encourages them also to comply with GAAP or to account for their investments consistent with the NCUA Accounting Manual For Federal Credit Unions (Accounting Manual). NCUA recognizes that at the present the Accounting Manual, which can be found on NCUA's web site, is only in draft form.

12. Net Worth

Part 703 defines the term ''net capital'' and uses an FCU's net capital, or percentage of net capital, as the basis for measuring and specifying limits on some of an FCU's investment activities. Amendments to the Act related to prompt corrective action define ''net worth'' and use net worth as its unit of measure instead of net capital. To be consistent, NCUA proposes to replace in the investment rule all references to ''net capital'' with ''net worth.''

13. Format

The ANPR solicited comments as to whether the format of part 703 needs to be changed. Nine commenters stated that the current format of part 703 should be changed to make the rule easier to read and more conducive to finding information quickly. They suggested eliminating the question and answer format and dividing large, cumbersome sections of the rule into smaller, distinct sections with individual topic headings. Two commenters preferred the current format remain unchanged. NCUA agrees with the nine commenters who favor a more user-friendly investment rule and proposes to reformat the rule.

As part of this effort to make the investment rule easier to read and locate information, NCUA proposes to revise the manner in which specific terms are defined. Specifically, the proposed rule adds a number of new definitions, deletes a number of existing definitions, and segregates all definitions into proposed § 703.2 to make the rule easier to understand.

Regulatory Procedures

Regulatory Flexibility Act

The Regulatory Flexibility Act requires NCUA to prepare an analysis to describe any significant economic impact a proposed rule may have on a substantial number of small credit unions (those under one million dollars in assets). The proposed rule clarifies the investment authority granted to FCUs and conforms the regulatory flexibility program to the investment rule. The proposed rule would not have a significant economic impact on a substantial number of small credit unions, and, therefore, a regulatory flexibility analysis is not required.

Paperwork Reduction Act

The current Office of Management and Budget control number assigned to Part 703 is 3133–0133. NCUA has determined that the proposed rule would not increase paperwork requirements under the Paperwork Reduction Act of 1995 and regulations of the Office of Management and Budget.

Executive Order 13132

Executive Order 13132 encourages independent regulatory agencies to consider the impact of their actions on state and local interests. In adherence to fundamental federalism principles, NCUA, an independent regulatory agency as defined in 44 U.S.C. 3502(5), voluntarily complies with the executive order. The proposed rule would not have substantial direct effects on the states, on the connection between the national government and the states, or on the distribution of power and responsibilities among the various levels of government. NCUA has determined that this proposed rule does not constitute a policy that has federalism implications for purposes of the executive order.

The Treasury and General Government Appropriations Act, 1999—Assessment of Federal Regulations and Policies on Families

The NCUA has determined that this proposed rule would not affect family well-being within the meaning of section 654 of the Treasury and General Government Appropriations Act, 1999, Public Law 105–277, 112 Stat. 2681 (1998).

Agency Regulatory Goal

NCUA's goal is to promulgate clear and understandable regulations that impose minimal regulatory burden. We request your comments on whether the proposed rule is understandable and minimally intrusive.

List of Subjects

12 CFR Part 703

Credit unions, Investments.

12 CFR Part 742

Credit unions, Reporting and recordkeeping requirements.

By the National Credit Union Administration Board on December 19, 2002.

Becky Baker,

Secretary of the Board.

Accordingly, NCUA proposes to amend 12 CFR parts 703 and 742 as follows:

PART 703—ORGANIZATION AND OPERATIONS OF FEDERAL CREDIT UNIONS

1. The authority citation for part 703 continues to read as follows:

Authority: 12 U.S.C. 1757(7), 1757(8), 1757(15).

2. Revise part 703 to read as follows:

PART 703—INVESTMENT AND DEPOSIT ACTIVITIES

Sec.
703.1 Purpose and scope.
703.2 Definitions.
703.3 Investment policies.
703.4 Recordkeeping and documentation requirements.
703.5 Discretionary control over investments and investment advisers.
703.6 Credit analysis.
703.7 Notice of non-compliant investments.
703.8 Broker-dealers.
703.9 Safekeeping of investments.
703.10 Monitoring non-security investments.
703.11 Valuing securities.
703.12 Monitoring securities.
703.13 Permissible investment activities.
703.14 Permissible investments.
703.15 Prohibited investment activities.
703.16 Prohibited investments.
703.17 Conflicts of interest.
703.18 Grandfathered Investments.
703.19 Investment pilot program.

§ 703.1 Purpose and scope.

(a) This part interprets several of the provisions of sections 107(7), 107(8), and 107(15) of the Federal Credit Union Act (Act), 12 U.S.C. 1757(7), 1757(8), 1757(15), which list those securities, deposits, and other obligations in which a federal credit union may invest. Part 703 identifies certain investments and deposit activities permissible under the Act and prescribes regulations governing those investments and deposit activities on the basis of safety and soundness concerns. Additionally, part 703 identifies and prohibits certain investments and deposit activities. Investments and deposit activities that are permissible under the Act and not prohibited or otherwise regulated by part 703 remain permissible for federal credit unions.

(b) This part does not apply to:

(1) Investment in loans to members and related activities, which is governed by §§ 701.21, 701.22, 701.23, and part 723 of this chapter;

(2) The purchase of real estate-secured loans pursuant to section 107(15)(A) of the Act, which is governed by § 701.23 of this chapter;

(3) Investment in credit union service organizations, which is governed by part 712 of this chapter;

(4) Investment in fixed assets, which is governed by § 701.36 of this chapter;

(5) Investment by corporate credit unions, which is governed by part 704 of this chapter; or

(6) Investment activity by state-chartered credit unions, except as provided in § 741.3(a)(3) of this chapter.

§ 703.2 Definitions.

The following definitions apply to this part:

(a) *Adjusted trading* means selling an investment to a counterparty at a price above its current fair value and simultaneously purchasing or committing to purchase from the counterparty another investment at a price above its current fair value.

(b) *Associated personnel* means a person engaged in the investment banking or securities business who is directly or indirectly controlled by a National Association of Securities Dealers (NASD) member, whether or not this person is registered or exempt from registration with NASD. Associated personnel includes every sole proprietor, partner, officer, director, or branch manager of any NASD member.

(c) *Bank note* means a direct, unconditional, and unsecured general obligation of a bank that ranks equally with all other senior unsecured indebtedness of the bank, except deposit liabilities and other obligations that are subject to any priorities or preferences.

(d) *Banker's acceptance* means a time draft that is drawn on and accepted by a bank and that represents an irrevocable obligation of the bank.

(e) *Borrowing repurchase transaction* means a transaction in which the federal credit union agrees to sell a security to a counterparty and to repurchase the same or an identical security from that counterparty at a specified future date and at a specified price.

(f) *Call* means an option that gives the holder the right to buy the underlying security at a specified price during a fixed time period.

(g) *Collective investment fund* means a fund maintained by a national bank under part 9 of the Comptroller of the Currency's regulations.

(h) *Commercial mortgage related security* means a mortgage related security, as defined below, except that it is collateralized entirely by commercial real estate, such as a warehouse or office building, or a multi-family dwelling consisting of more than four units.

(i) *Counterparty* means the party on the other side of the transaction.

(j) *Custodial agreement* means a contract in which one party agrees to exercise ordinary care in protecting the securities held in safekeeping for others.

(k) *Delivery versus payment* means payment for an investment must occur simultaneously with its delivery.

(l) *Deposit note* means an obligation of a bank that is similar to a certificate of deposit but is rated.

(m) *Derivatives* means financial instruments or other contracts whose value is based on the performance of an underlying financial asset, index or other investment that have the three following characteristics:

(1) It has one or more underlyings and one or more notional amounts or payment provisions or both that determine the amount of the settlement or settlements, and, in some cases, whether or not a settlement is required;

(2) It requires no initial net investment or an initial net investment that is less than would be required for other types of contracts that would be expected to have a similar response to changes in market factors; and

(3) Its terms require or permit net settlement, it can readily be settled net by means outside the contract, or it provides for delivery of an asset that puts the recipient in a position not substantially different from net settlement.

(n) *Embedded option* means a characteristic of an investment that gives the issuer or holder the right to alter the level and timing of the cash flows of the investment. Embedded options include call and put provisions and interest rate caps and floors. Since a prepayment option in a mortgage is a type of call provision, a mortgage-backed security composed of mortgages that may be prepaid is an example of an investment with an embedded option.

(o) *Eurodollar deposit* means a U.S. dollar-denominated deposit in a foreign branch of a United States depository institution.

(p) *European financial options contract* means an option that can be exercised only on its expiration date.

(q) *Fair value* means the amount at which an instrument could be exchanged in a current, arms-length transaction between willing parties, as opposed to a forced or liquidation sale.

(r) *Financial options contract* means an agreement to make or take delivery of a standardized financial instrument upon demand by the holder of the contract as specified in the agreement.

(s) *Immediate family member* means a spouse or other family member living in the same household.

(t) *Industry-recognized information provider* means an organization that obtains compensation by providing information to investors and receives no compensation for the purchase or sale of investments.

(u) *Investment* means any security, obligation, account, deposit, or other item authorized for purchase by a federal credit union under sections 107(7), 107(8), or 107(15) of the Act, or this part, other than loans to members.

(v) *Investment repurchase transaction* means a transaction in which an investor agrees to purchase a security from a counterparty and to resell the same or an identical security to that counterparty at a specified future date and at a specified price.

(w) *Maturity* means the date the last principal amount of a security is scheduled to come due and does not mean the call date or the weighted average life of a security.

(x) *Mortgage related security* means a security as defined in section 3(a)(41) of the Securities Exchange Act of 1934 (15 U.S.C. 78c(a)(41)), *e.g.,* a privately-issued security backed by first lien mortgages secured by real estate upon which is located a dwelling, mixed residential and commercial structure, residential manufactured home, or commercial structure, that is rated in one of the two highest rating categories by at least one nationally-recognized statistical rating organization.

(y) *Mortgage servicing rights* means a contractual obligation to perform mortgage servicing and the right to receive compensation for performing those services. Mortgage servicing is the administration of a mortgage loan, including collecting monthly payments and fees, providing recordkeeping and escrow functions, and, if necessary curing defaults and foreclosing.

(z) *Negotiable instrument* means an instrument that may be freely transferred from the purchaser to another person or entity by delivery, or endorsement and delivery, with full legal title becoming vested in the transferee.

(aa) *Net worth* means the retained earnings balance of the credit union at quarter end as determined under generally accepted accounting principles and as further defined in § 702.2(f) of this chapter.

(bb) *Official* means any member of a federal credit union's board of directors, credit committee, supervisory committee, or investment-related committee.

(cc) *Ordinary care* means the degree of care, which an ordinarily prudent and competent person engaged in the same line of business or endeavor should exercise under similar circumstances.

(dd) *Pair-off transaction* means an investment purchase transaction that is closed or sold on, or before the settlement date. In a pair-off, an investor commits to purchase an investment, but then pairs-off the purchase with a sale of the same investment before or on the settlement date.

(ee) *Put* means a financial options contract that entitles the holder to sell, entirely at the holder's option, a specified quantity of a security at a specified price at any time until the stated expiration date of the contract.

(ff) *Registered investment company* means an investment company that is registered with the Securities and Exchange Commission under the Investment Company Act of 1940 (15 U.S.C. 80a). Examples of registered investment companies are mutual funds and unit investment trusts.

(gg) *Regular way settlement* means delivery of a security from a seller to a buyer within the time frame that the securities industry has established for immediate delivery of that type of security. For example, regular way settlement of a Treasury security includes settlement on the trade date (cash), the business day following the trade date (regular way), and the second business day following the trade date (skip day).

(hh) *Residual interest* means the remainder cash flows from collateralized mortgage obligations/real estate mortgage investment conduits (CMOs/REMICs), or other mortgage-backed security transaction, after payments due bondholders and trust administrative expenses have been satisfied.

(ii) *Securities lending* means lending a security to a counterparty, either directly or through an agent, and accepting collateral in return.

(jj) *Security* means a share, participation, or other interest in property or in an enterprise of the issuer or an obligation of the issuer that: (1) Either is represented by an instrument issued in bearer or registered form or, if not represented by an instrument, is registered in books maintained to record transfers by or on behalf of the issuer; (2) Is of a type commonly dealt in on securities exchanges or markets or, when represented by an instrument, is commonly recognized in any area in which it is issued or dealt in as a medium for investment; and (3) Either is one of a class or series or by its terms is divisible into a class or series of shares, participations, interests, or obligations.

(kk) *Senior management employee* means a federal credit union's chief executive officer (typically this individual holds the title of President or Treasurer/Manager), an assistant chief executive officer, and the chief financial officer.

(ll) *Small business related security* means a security as defined in section 3(a)(53) of the Securities Exchange Act of 1934 (15 U.S.C. 78c(a)(53)), *e.g.,* a security that is rated in 1 of the 4 highest rating categories by at least one nationally recognized statistical rating organization, and represents an interest in 1 or more promissory notes or leases of personal property evidencing the obligation of a small business concern and originated by an insured depository institution, insured credit union, insurance company, or similar institution which is supervised and examined by a Federal or State authority, or a finance company or leasing company. This definition does not include Small Business Administration securities permissible under section 107(7) of the Act.

(mm) *Weighted average life* means the weighted-average time to the return of a dollar of principal, calculated by multiplying each portion of principal received by the time at which it is expected to be received (based on a reasonable and supportable estimate of that time) and then summing and dividing by the total amount of principal.

(nn) *When-issued trading of securities* means the buying and selling of securities in the period between the announcement of an offering and the issuance and payment date of the securities.

(oo) *Yankee dollar deposit* means a deposit in a United States branch of a foreign bank licensed to do business in the state in which it is located, or a deposit in a state-chartered, foreign controlled bank.

(pp) *Zero coupon investment* means an investment that makes no periodic interest payments but instead is sold at a discount from its face value. The holder of a zero coupon investment realizes the rate of return through the gradual appreciation of the investment, which is redeemed at face value on a specified maturity date.

§ 703.3 Investment policies.

A federal credit union's board of directors must establish written investment policies consistent with the Act, this part, and other applicable laws and regulations and must review the policy at least annually. These policies may be part of a broader, asset-liability management policy. Written investment policies must address the following:

(a) The purposes and objectives of the federal credit union's investment activities;

(b) The characteristics of the investments the federal credit union may make including the issuer,

maturity, index, cap, floor, coupon rate, coupon formula, call provision, average life, and interest rate risk;

(c) How the federal credit union will manage interest rate risk;

(d) How the federal credit union will manage liquidity risk;

(e) How the federal credit union will manage credit risk including specifically listing institutions, issuers, and counterparties that may be used, or criteria for their selection, and limits on the amounts that may be invested with each;

(f) How the federal credit union will manage concentration risk, which can result from dealing with a single or related issuers, lack of geographic distribution, holding obligations with similar characteristics like maturities and indexes, holding bonds having the same trustee, and holding securitized loans having the same originator, packager, or guarantor;

(g) Who has investment authority and the extent of that authority. Those with authority must be qualified by education or experience to assess the risk characteristics of investments and investment transactions. Only those individuals with investment authority may be voting members of an investment committee;

(h) The broker-dealers the federal credit union may use;

(i) The safekeepers the federal credit union may use;

(j) How the federal credit union will handle an investment that, after purchase, is outside of board policy or fails a requirement of this part; and

(k) How the federal credit union will conduct investment trading activities, if applicable, including addressing:

(1) Who has purchase and sale authority;

(2) Limits on trading account size;

(3) Allocation of cash flow to trading accounts;

(4) Stop loss or sale provisions;

(5) Dollar size limitations of specific types, quantity and maturity to be purchased;

(6) Limits on the length of time an investment may be inventoried in a trading account; and

(7) Internal controls, including segregation of duties.

§ 703.4 Recordkeeping and documentation requirements.

(a) Federal credit unions with assets of $10,000,000 or greater must comply with all generally accepted accounting principles applicable to reports or statements required to be filed with the NCUA. Federal credit unions with assets less than $10,000,000 are encouraged to do the same, but are not required to do so. Federal credit unions with assets less than $10,000,000 may choose to account for their investments consistent with the NCUA Accounting Manual For Federal Credit Unions.

(b) A federal credit union must maintain documentation for each investment transaction for as long as it holds the investment and until the documentation has been audited in accordance with § 701.12 of this chapter and examined by NCUA. The documentation should include, where applicable, bids and prices at purchase and sale and for periodic updates, relevant disclosure documents or a description of the security from an industry-recognized information provider, financial data, and tests and reports required by the federal credit union's investment policy and this part.

(c) A federal credit union must maintain documentation its board of directors used to approve a broker-dealer or a safekeeper for as long as the broker-dealer or safekeeper is approved and until the documentation has been audited in accordance with § 701.12 of this chapter and examined by NCUA.

(d) A federal credit union must obtain an individual confirmation statement from each broker-dealer for each investment purchased or sold.

§ 703.5 Discretionary control over investments and investment advisers.

(a) Except as provided in paragraph (b) of this section, a federal credit union must retain discretionary control over its purchase and sale of investments. A federal credit union has not delegated discretionary control to an investment adviser when the federal credit union reviews all recommendations from investment advisers and is required to authorize a recommended purchase or sale transaction before its execution.

(b)(1) A federal credit union may delegate discretionary control over the purchase and sale of investments to a person other than a federal credit union official or employee:

(i) Provided the person is an investment adviser registered with the Securities and Exchange Commission under the Investment Advisers Act of 1940 (15 U.S.C. 80b); and

(ii) In an amount up to 100 percent of its net worth in the aggregate at the time of delegation.

(2) At least annually, the federal credit union must adjust the amount of funds held under discretionary control to comply with the 100 percent of net worth cap. The federal credit union's board of directors must receive notice as soon as possible, but no later than the next regularly scheduled board meeting, of the amount exceeding the net worth cap and notify in writing the appropriate regional director within 5 days after the board meeting. The credit union must develop a plan to comply with the cap within a reasonable period of time.

(3) Before transacting business with an investment adviser, a federal credit union must analyze his or her background and information available from state or federal securities regulators, including any enforcement actions against the adviser, associated personnel, and the firm for which the adviser works.

(c) A federal credit union may not compensate an investment adviser with discretionary control over the purchase and sale of investments on a per transaction basis or based on capital gains, capital appreciation, net income, performance relative to an index, or any other incentive basis.

(d) A federal credit union must obtain a report from its investment adviser at least monthly that details the investments under the adviser's control and their performance.

§ 703.6 Credit analysis.

A federal credit union must conduct and document a credit analysis on an investment and the issuing entity before purchasing it, except for investments issued or fully guaranteed as to principal and interest by the U.S. government or its agencies, enterprises, or corporations or fully insured (including accumulated interest) by the National Credit Union Administration or the Federal Deposit Insurance Corporation. A federal credit union must update this analysis at least annually for as long as it holds the investment.

§ 703.7 Notice of non-compliant investments.

A federal credit union's board of directors must receive notice as soon as possible, but no later than the next regularly scheduled board meeting, of any investment that either is outside of board policy after purchase or has failed a requirement of this part. The board of directors must document its action regarding the investment in the minutes of the board meeting, including a detailed explanation of any decision not to sell it. The federal credit union must notify in writing the appropriate regional director of an investment that has failed a requirement of this part within 5 days after the board meeting.

§ 703.8 Broker-dealers.

(a) A federal credit union may purchase and sell investments through a broker-dealer as long as the broker-

dealer is registered as a broker-dealer with the Securities and Exchange Commission under the Securities Exchange Act of 1934 (15 U.S.C. 78a *et seq.*) or is a depository institution whose broker-dealer activities are regulated by a federal or state regulatory agency.

(b) Before purchasing an investment through a broker-dealer, a federal credit union must analyze and annually update the following:

(1) The background of any sales representative with whom the federal credit union is doing business;

(2) Information available from state or federal securities regulators and securities industry self-regulatory organizations, such as the National Association of Securities Dealers and the North American Securities Administrators Association, about any enforcement actions against the broker-dealer, its affiliates, or associated personnel; and

(3) If the broker-dealer is acting as the federal credit union's counterparty, the ability of the broker-dealer and its subsidiaries or affiliates to fulfill commitments, as evidenced by capital strength, liquidity, and operating results. The federal credit union should consider current financial data, annual reports, reports of nationally-recognized statistical rating agencies, relevant disclosure documents, and other sources of financial information.

§ 703.9 Safekeeping of investments.

(a) A federal credit union's purchased investments and repurchase collateral must be in the federal credit union's possession, recorded as owned by the federal credit union through the Federal Reserve Book-Entry System, or held by a board-approved safekeeper under a written custodial agreement that requires the safekeeper to exercise, at least, ordinary care.

(b) Any safekeeper used by a federal credit union must be regulated and supervised by either the Securities and Exchange Commission, a federal or state depository institution regulatory agency, or a state trust company regulatory agency.

(c) A federal credit union must obtain and reconcile monthly a statement of purchased investments and repurchase collateral held in safekeeping.

(d) Annually, the federal credit union must analyze the ability of the safekeeper to fulfill its custodial responsibilities, as evidenced by capital strength, liquidity, and operating results. The federal credit union should consider current financial data, annual reports, reports of nationally-recognized statistical rating agencies, relevant disclosure documents, and other sources of financial information.

§ 703.10 Monitoring non-security investments.

(a) At least quarterly, a federal credit union must prepare a written report listing all of its shares and deposits in banks, credit unions, and other depository institutions, that have one or more of the following features:

(1) Embedded options;

(2) Remaining maturities greater than 3 years; or

(3) Coupon formulas that are related to more than one index or are inversely related to, or multiples of, an index.

(b) The requirement of paragraph (a) of this section does not apply to shares and deposits that are securities.

(c) If a federal credit union does not have an investment-related committee, then each member of its board of directors must receive a copy of the report described in paragraph (a) of this section. If a federal credit union has an investment-related committee, then each member of the committee must receive a copy of the report, and each member of the board must receive a summary of the information in the report.

§ 703.11 Valuing securities.

(a) Before purchasing or selling a security, a federal credit union must obtain either price quotations on the security from at least two broker-dealers or a price quotation on the security from an industry-recognized information provider. This requirement to obtain price quotations does not apply to new issues purchased at par or at original issue discount.

(b) At least monthly, a federal credit union must determine the fair value of each security it holds. It may determine fair value by obtaining a price quotation on the security from an industry-recognized information provider, a broker-dealer, or a safekeeper.

(c) At least annually, the federal credit union's supervisory committee or its external auditor must independently assess the reliability of monthly price quotations received from a broker-dealer or safekeeper. The federal credit union's supervisory committee or external auditor must follow generally accepted auditing standards, which require either re-computation or reference to market quotations.

(d) If a federal credit union is unable to obtain a price quotation required by this section for a particular security, then it may obtain a quotation for a security with substantially similar characteristics.

§ 703.12 Monitoring securities.

(a) At least monthly, a federal credit union must prepare a written report setting forth, for each security held, the fair value and dollar change since the prior month-end, with summary information for the entire portfolio.

(b) At least quarterly, a federal credit union must prepare a written report setting forth the sum of the fair values of all fixed and variable rate securities held that have one or more of the following features:

(1) Embedded options;

(2) Remaining maturities greater than 3 years; or

(3) Coupon formulas that are related to more than one index or are inversely related to, or multiples of, an index.

(c) Where the amount calculated in paragraph (b) of this section is greater than a federal credit union's net worth, the report described in that paragraph must provide a reasonable and supportable estimate of the potential impact, in percentage and dollar terms, of an immediate and sustained parallel shift in market interest rates of plus and minus 300 basis points on:

(1) The fair value of each security in the federal credit union's portfolio;

(2) The fair value of the federal credit union's portfolio as a whole; and

(3) The federal credit union's net worth.

(d) If the federal credit union does not have an investment-related committee, then each member of its board of directors must receive a copy of the reports described in paragraphs (a) through (c) of this section. If the federal credit union has an investment-related committee, then each member of the committee must receive copies of the reports, and each member of the board of directors must receive a summary of the information in the reports.

§ 703.13 Permissible investment activities.

(a) Regular way settlement and delivery versus payment basis. A federal credit union may only contract for the purchase or sale of a security as long as the delivery of the security is by regular way settlement and the transaction is accomplished on a delivery versus payment basis.

(b) Federal funds. A federal credit union may sell federal funds to an institution described in Section 107(8) of the Act and credit unions, as long as the interest or other consideration received from the financial institution is at the market rate for federal funds transactions.

(c) Investment repurchase transaction. A federal credit union may enter into an investment repurchase transaction so long as:

(1) Any securities the federal credit union receives are permissible investments for federal credit unions, the federal credit union, or its agent, either takes physical possession or control of the repurchase securities or is recorded as owner of them through the Federal Reserve Book Entry Securities Transfer System, the federal credit union, or its agent, receives a daily assessment of their market value, including accrued interest, and the federal credit union maintains adequate margins that reflect a risk assessment of the securities and the term of the transaction; and

(2) The federal credit union has entered into signed contracts with all approved counterparties.

(d) Borrowing repurchase transaction. A federal credit union may enter into a borrowing repurchase transaction so long as:

(1) The transaction meets the requirements of paragraph (c) of this section;

(2) Any cash the federal credit union receives is subject to the borrowing limit specified in Section 107(9) of the Act, and any investments the federal credit union purchases with that cash are permissible for federal credit unions; and

(3) The investments referenced in paragraph (d)(2) of this section mature no later than the maturity of the borrowing repurchase transaction.

(e) Securities lending transaction. A federal credit union may enter into a securities lending transaction so long as:

(1) The federal credit union receives written confirmation of the loan;

(2) Any collateral the federal credit union receives is a legal investment for federal credit unions, the federal credit union, or its agent, obtains a first priority security interest in the collateral by taking physical possession or control of the collateral, or is recorded as owner of the collateral through the Federal Reserve Book Entry Securities Transfer System; and the federal credit union, or its agent, receives a daily assessment of the market value of the collateral, including accrued interest, and maintains adequate margin that reflects a risk assessment of the collateral and the term of the loan;

(3) Any cash the federal credit union receives is subject to the borrowing limit specified in section 107(9) of the Act, and any investments the federal credit union purchases with that cash are permissible for federal credit unions and mature no later than the maturity of the transaction; and

(4) The federal credit union has executed a written loan and security agreement with the borrower.

(f)(1) Trading securities. A federal credit union may trade securities, including engaging in when-issued trading and pair-off transactions, so long as the federal credit union can show that it has sufficient resources, knowledge, systems, and procedures to handle the risks.

(2) A federal credit union must record any security it purchases or sells for trading purposes at fair value on the trade date. The trade date is the date the federal credit union commits, orally or in writing, to purchase or sell a security.

(3) At least monthly, the federal credit union must give its board of directors or investment-related committee a written report listing all purchase and sale transactions of trading securities and the resulting gain or loss on an individual basis.

§ 703.14 Permissible investments.

(a) Variable rate investment. A federal credit union may invest in a variable rate investment, as long as the index is tied to domestic interest rates and not, for example, to foreign currencies, foreign interest rates, or domestic or foreign commodity prices, equity prices, or inflation rates. For purposes of this part, the U.S. dollar-denominated London Interbank Offered Rate (LIBOR) is a domestic interest rate.

(b) Corporate credit union shares or deposits. A federal credit union may purchase shares or deposits in a corporate credit union, except where the NCUA Board has notified it that the corporate credit union is not operating in compliance with part 704 of this chapter. A federal credit union's aggregate amount of paid-in capital and membership capital, as defined in part 704 of this chapter, in one corporate credit union is limited to two percent of its assets measured at the time of investment or adjustment. A federal credit union's aggregate amount of paid-in capital and membership capital in all corporate credit unions is limited to four percent of its assets measured at the time of investment or adjustment.

(c) Registered investment company. A federal credit union may invest in a registered investment company or collective investment fund, as long as the prospectus of the company or fund restricts the investment portfolio to investments and investment transactions that are permissible for federal credit unions.

(d) Collateralized mortgage obligation/real estate mortgage investment conduit. A federal credit union may invest in a fixed or variable rate collateralized mortgage obligation/real estate mortgage investment conduit.

(e) Municipal security. A federal credit union may purchase and hold a municipal security, as defined in section 107(7)(K) of the Act, only if a nationally-recognized statistical rating organization has rated it in one of the four highest rating categories.

(f) Instruments issued by institutions described in section 107(8) of the Act. A federal credit union may invest in the following instruments issued by an institution described in section 107(8) of the Act:

(1) Yankee dollar deposits;

(2) Eurodollar deposits;

(3) Banker's acceptances;

(4) Deposit notes; and

(5) Bank notes with original weighted average maturities of less than five years.

(g) European financial options contract. A federal credit union may purchase a European financial options contract or a series of European financial options contracts only to fund the payment of dividends on member share certificates where the dividend rate is tied to an equity index provided:

(1) The option and dividend rate are based on a domestic equity index;

(2) Proceeds from the options are used only to fund dividends on the equity-linked share certificates;

(3) Dividends on the share certificates are derived solely from the change in the domestic equity index over a specified period;

(4) The options' expiration dates coincide with the maturity date of the share certificate;

(5) The certificate may be redeemed prior to the maturity date only upon the member's death or termination of the corresponding option;

(6) The total costs associated with the purchase of the option is known by the federal credit union prior to effecting the transaction;

(7) The options are purchased at the same time the certificate is issued to the member.

(8) The counterparty to the transaction is a domestic counterparty and has been approved by the federal credit union's board of directors;

(9) The counterparty to the transaction:

(i) Has a long-term, senior, unsecured debt rating from a nationally-recognized statistical rating organization of AA- (or equivalent) or better at the time of the transaction, and the contract between the counterparty and the federal credit union specifies that if the long-term, senior, unsecured debt rating declines below AA- (or equivalent) then the counterparty agrees to post collateral with an independent party in an amount fully securing the value of the option; or

(ii) Posts collateral with an independent party in an amount fully securing the value of the option if the counterparty does not have a long-term, senior unsecured debt rating from a nationally-recognized statistical rating organization.

(10) Any collateral posted by the counterparty is a permissible investment for federal credit unions and is valued daily by an independent third party along with the value of the option;

(11) The aggregate amount of equity-linked member share certificates does not exceed the credit union's net worth;

(12) The terms of the share certificate include a guarantee that there can be no loss of principal to the member regardless of changes in the value of the option unless the certificate is redeemed prior to maturity; and

(13) The federal credit union provides it board of directors with a monthly report detailing at a minimum:

(i) The dollar amount of outstanding equity-linked share certificates;

(ii) Their maturities; and

(iii) The fair value of the options as determined by an independent third party.

§ 703.15 Prohibited investment activities; adjusted trading or short sales.

A federal credit union may not engage in adjusted trading or short sales.

§ 703.16 Prohibited investments.

(a) Derivatives. A federal credit union may not purchase or sell financial derivatives, such as futures, options, interest rate swaps, or forward rate agreements, except as permitted under §§ 701.21(i) and 703.14(h) of this chapter;

(b) Zero coupon investments. A federal credit union may not purchase a zero coupon investment with a maturity date that is more than 10 years from the settlement date; and

(c) Mortgage servicing rights. A federal credit union may not purchase mortgage servicing rights as an investment but may perform mortgage servicing functions as a financial service for a member as long as the mortgage loan is owned by a member;

(d) A federal credit union may not purchase a commercial mortgage related security that is not otherwise permitted by section 107(7)(E) of the Act.

(e) Other prohibited investments. A federal credit union may not purchase stripped mortgage-backed securities, residual interests in collateralized mortgage obligations/real estate mortgage investment conduits, or small business related securities.

§ 703.17 Conflicts of interest.

(a) A federal credit union's officials and senior management employees, and their immediate family members, may not receive anything of value in connection with its investment transactions. This prohibition also applies to any other employee, such as an investment officer, if the employee is directly involved in investments, unless the federal credit union's board of directors determines that the employee's involvement does not present a conflict of interest. This prohibition does not include compensation for employees.

(b) A federal credit union's officials and employees must conduct all transactions with business associates or family members that are not specifically prohibited by paragraph (a) of this section at arm's length and in the federal credit union's best interest.

§ 703.18 Grandfathered Investments.

(a) Subject to safety and soundness considerations, a federal credit union may hold a CMO/REMIC residual, stripped mortgage-backed securities, or zero coupon security with a maturity greater than 10 years, if it purchased the investment:

(1) Before December 2, 1991; or

(2) On or after December 2, 1991, but before January 1, 1998, if for the purpose of reducing interest rate risk and if the federal credit union meets the following:

(i) The federal credit union has a monitoring and reporting system in place that provides the documentation necessary to evaluate the expected and actual performance of the investment under different interest rate scenarios;

(ii) The federal credit union uses the monitoring and reporting system to conduct and document an analysis that shows, before purchase, that the proposed investment will reduce its interest rate risk;

(iii) After purchase, the federal credit union evaluates the investment at least quarterly to determine whether or not it actually has reduced the interest rate risk; and

(iv) The federal credit union accounts for the investment consistent with generally accepted accounting principles.

(b) All grandfathered investments are subject to the valuation and monitoring requirements of §§ 703.10, 703.11, and 703.12 of this part.

§ 703.19 Investment pilot program.

(a) Under the investment pilot program, NCUA will permit a limited number of federal credit unions to engage in investment activities prohibited by this part but permitted by the Act.

(b) Except as provided in paragraph (c) of this section, before a federal credit union may engage in additional activities, it must obtain written approval from NCUA. To obtain approval, a federal credit union must submit a request to its regional director that addresses the following items:

(1) Certification that the federal credit union is ''well-capitalized'' under part 702 of this chapter;

(2) Board policies approving the activities and establishing limits on them;

(3) A complete description of the activities, with specific examples of how they will benefit the federal credit union and how they will be conducted;

(4) A demonstration of how the activities will affect the federal credit union's financial performance, risk profile, and asset-liability management strategies;

(5) Examples of reports the federal credit union will generate to monitor the activities;

(6) Projections of the associated costs of the activities, including personnel, computer, audit, and so forth;

(7) Descriptions of the internal systems that will measure, monitor, and report the activities;

(8) Qualifications of the staff and officials responsible for implementing and overseeing the activities; and

(9) Internal control procedures that will be implemented, including audit requirements.

(c) A third-party seeking approval of an investment pilot program must submit a request to the Director of the Office of Examination and Insurance that addresses the following items:

(1) A complete description of the activities with specific examples of how a credit union will conduct and account for them, and how they will benefit a federal credit union;

(2) A description of any risks to a federal credit union from participating in the program; and

(3) Contracts that must be executed by the federal credit union.

(d) A federal credit union need not obtain individual written approval to engage in investment activities prohibited by this part but permitted by statute where the activities are part of a third-party investment program that NCUA has approved under this section.

PART 742—REGULATORY FLEXIBILITY PROGRAM

3. The authority citation for part 742 continues to read as follows:

Authority: 12 U.S.C. 1756 and 1766.

4. Revise § 742.4 to read as follows:

§ 742.4 From what NCUA Regulations will I be exempt?

(a) RegFlex credit unions are exempt from the provisions of the following NCUA regulations without restrictions or limitations: § 701.25, § 701.32(b) and (c), § 701.36(a), (b) and (c), § 703.5(b)(1)(ii) and (b)(2), § 703.12(c); and § 703.16(b) of this chapter.

(b) RegFlex credit unions are exempt from the provisions of the following NCUA regulations with certain restrictions or limitations:

(1) § 703.13(d)(3) of this chapter, provided the value of the investments that mature later than the borrowing repurchase transaction does not exceed 100 percent of the federal credit union's net worth; and

(2) § 703.16(d) of this chapter provided,

(i) The issuer of the security is domestic;

(ii) The security is rated in one of the two highest rating categories by at least one nationally-recognized statistical rating organization;

(iii) The security meets the definition of mortgage related security as defined in 15 U.S.C. 78c(a)(41) and the definition of commercial mortgage related security as defined in § 703.2 of this chapter;

(iv) The security's underlying pool of loans contains more than 50 loans with no one loan representing more than 10 percent of the pool; and

(v) The aggregate total of commercial mortgage related securities purchased by the federal credit union does not exceed 50 percent of its net worth.

[FR Doc. 02–32496 Filed 12–26–02; 8:45 am]

BILLING CODE 7535–01–P

DEPARTMENT OF TRANSPORTATION

Federal Aviation Administration

14 CFR Part 39

[Docket No. 2002–NE–35–AD]

RIN 2120–AA64

Airworthiness Directives; General Electric Company CF6–50 Series Turbofan Engines

AGENCY: Federal Aviation Administration, DOT.

ACTION: Notice of proposed rulemaking (NPRM).

SUMMARY: The Federal Aviation Administration (FAA) proposes to adopt a new airworthiness directive (AD) that is applicable to General Electric Company (GE) CF6–50 series turbofan engines. This proposal would require removal from service of eight serial number (SN) low pressure turbine (LPT) stage 1 disks, part number (P/N) 9061M21P03, at the next engine shop visit. This proposal is prompted by a report of the potential for iron-rich inclusions introduced during manufacture in the affected disks. The actions specified by the proposed AD are intended to prevent LPT stage 1 disk cracking, due to iron-rich inclusions introduced during manufacture, leading to uncontained disk failure.

DATES: Comments must be received by February 25, 2003.

ADDRESSES: Submit comments in triplicate to the Federal Aviation Administration (FAA), New England Region, Office of the Regional Counsel, Attention: Rules Docket No. 2002–NE–35–AD, 12 New England Executive Park, Burlington, MA 01803–5299. Comments may be inspected at this location, by appointment, between 8 a.m. and 4:30 p.m., Monday through Friday, except Federal holidays. Comments may also be sent via the Internet using the following address: ''*9-ane-adcomment@faa.gov*''. Comments sent via the Internet must contain the docket number in the subject line.

FOR FURTHER INFORMATION CONTACT: Karen Curtis, Aerospace Engineer, Engine Certification Office, FAA, Engine and Propeller Directorate, 12 New England Executive Park, Burlington, MA 01803–5299; telephone: (781) 238–7192, fax: (781) 238–7199.

SUPPLEMENTARY INFORMATION:

Comments Invited

Interested persons are invited to participate in the making of the proposed rule by submitting such written data, views, or arguments as they may desire. Communications should identify the Rules Docket number and be submitted in triplicate to the address specified above. All communications received on or before the closing date for comments, specified above, will be considered before taking action on the proposed rule. The proposals contained in this action may be changed in light of the comments received.

Comments are specifically invited on the overall regulatory, economic, environmental, and energy aspects of the proposed rule. All comments submitted will be available, both before and after the closing date for comments, in the Rules Docket for examination by interested persons. A report summarizing each FAA-public contact concerned with the substance of this proposal will be filed in the Rules Docket.

Commenters wishing the FAA to acknowledge receipt of their comments submitted in response to this action must submit a self-addressed, stamped postcard on which the following statement is made: ''Comments to Docket Number 2002–NE–35–AD.'' The postcard will be date stamped and returned to the commenter.

Availability of NPRM's

Any person may obtain a copy of this NPRM by submitting a request to the FAA, New England Region, Office of the Regional Counsel, Attention: Rules Docket No. 2002–NE–35–AD, 12 New England Executive Park, Burlington, MA 01803–5299.

Discussion

In November of 2000, the FAA became aware that a CF6–80C2 engine high pressure turbine disk was rejected at inspection because it was cracked. GE and the disk supplier investigated and determined that the crack resulted from the presence of an iron-rich inclusion that was inadvertently introduced into the lot of INCO 718 disk material during the manufacturing melt process. GE and the disk supplier have since identified another lot that potentially had iron-rich inclusions introduced during the manufacturing melt process. That lot was used to manufacture eight CF6–50 engine LPT stage 1 disks. GE and the disk supplier have since coordinated and implemented corrective actions to prevent inclusions from being introduced in the manufacturing melt process.

On November 30, 2001, GE issued service bulletin (SB) SB 72–1225, requesting that operators remove the eight suspect disks from service at the next engine shop visit. On January 7, 2002, GE issued All Operators Wire No. 02.CF6/002, again informing the operators of the above SB, recommending removal of the suspect disks from service, and requesting report back of the disk removal date to GE. Currently, not all of the eight disks have been reported as having been removed or scheduled for removal. This condition, if not corrected, could result in LPT stage 1 disk cracking, leading to uncontained disk failure.

FAA's Determination of an Unsafe Condition and Proposed Actions

Since an unsafe condition has been identified that is likely to exist or develop on other CF6 series turbofan engines of a similar type design and manufacturing sequence, the proposed AD would require removal from service

of CF6–50 LPT stage 1 disks, P/N 9061M21P03, SN's SNL17693, SNL17694, SNL44200, SNL47624, SNL47625, SNL47626, SNL47627, and SNL47628 at the next engine shop visit after the effective date of the AD.

Economic Analysis

There are approximately 2,101 CF6–50 series turbofan engines of the affected design in the worldwide fleet. The FAA estimates that no more than eight of the 469 engines installed on airplanes of U.S. registry would be affected by this proposed AD. The FAA also estimates that it would take approximately 32 work hours per engine to perform the proposed actions, and that the average labor rate is $60 per work hour. Required parts would cost approximately $75,490 per engine. Based on these figures, the total cost of the proposed AD to eight U.S. operators is estimated to be $619,280.

Regulatory Analysis

This proposed rule does not have federalism implications, as defined in Executive Order 13132, because it would not have a substantial direct effect on the States, on the relationship between the national government and the States, or on the distribution of power and responsibilities among the various levels of government. Accordingly, the FAA has not consulted with state authorities prior to publication of this proposed rule.

For the reasons discussed above, I certify that this proposed regulation (1) is not a ''significant regulatory action'' under Executive Order 12866; (2) is not a ''significant rule'' under the DOT Regulatory Policies and Procedures (44 FR 11034, February 26, 1979); and (3) if promulgated, will not have a significant economic impact, positive or negative, on a substantial number of small entities under the criteria of the Regulatory Flexibility Act. A copy of the draft regulatory evaluation prepared for this action is contained in the Rules Docket. A copy of it may be obtained by contacting the Rules Docket at the location provided under the caption **ADDRESSES**.

List of Subjects in 14 CFR Part 39

Air transportation, Aircraft, Aviation safety, Safety.

The Proposed Amendment

Accordingly, pursuant to the authority delegated to me by the Administrator, the Federal Aviation Administration proposes to amend part 39 of the Federal Aviation Regulations (14 CFR part 39) as follows:

PART 39—AIRWORTHINESS DIRECTIVES

1. The authority citation for part 39 continues to read as follows:

Authority: 49 U.S.C. 106(g), 40113, 44701.

39.13 [Amended]

2. Section 39.13 is amended by adding the following new airworthiness directive:

General Electric Company: Docket No. 2002–NE–35–AD.

Applicability

This airworthiness directive (AD) is applicable to General Electric Company CF6–50 series turbofan engines with low pressure turbine (LPT) stage 1 disks, part number (P/N) 9061M21P03, serial numbers (SN's) SNL17693, SNL17694, SNL44200, SNL47624, SNL47625, SNL47626, SNL47627, and SNL47628 installed. These engines are installed on, but not limited to Airbus Industrie A300, Boeing 747, and McDonnell Douglas DC–10 airplanes.

Note 1: This AD applies to each engine identified in the preceding applicability provision, regardless of whether it has been modified, altered, or repaired in the area subject to the requirements of this AD. For engines that have been modified, altered, or repaired so that the performance of the requirements of this AD is affected, the owner/operator must request approval for an alternative method of compliance in accordance with paragraph (c) of this AD. The request should include an assessment of the effect of the modification, alteration, or repair on the unsafe condition addressed by this AD; and, if the unsafe condition has not been eliminated, the request should include specific proposed actions to address it.

Compliance

Compliance with this AD is required as indicated, unless already done.

To prevent LPT stage 1 disk cracking due to the potential for iron-rich inclusions introduced during manufacture, leading to uncontained disk failure, do the following:

(a) Remove from service LPT stage 1 disks P/N 9061M21P03, SN's SNL17693, SNL17694, SNL44200, SNL47624, SNL47625, SNL47626, SNL47627, and SNL47628 at the next engine shop visit.

(b) After the effective date of this AD, do not install any of the LPT stage 1 disks listed in paragraph (a) of this AD into any engine.

Alternative Methods of Compliance

(c) An alternative method of compliance or adjustment of the compliance time that provides an acceptable level of safety may be used if approved by the Manager, Engine Certification Office (ECO). Operators must submit their request through an appropriate FAA Principal Maintenance Inspector, who may add comments and then send it to the Manager, ECO.

Note 2: Information concerning the existence of approved alternative methods of compliance with this airworthiness directive, if any, may be obtained from the ECO.

Special Flight Permits

(d) Special flight permits may be issued in accordance with §§ 21.197 and 21.199 of the Federal Aviation Regulations (14 CFR 21.197 and 21.199) to operate the airplane to a location where the requirements of this AD can be done.

Issued in Burlington, Massachusetts, on December 20, 2002.

Jay J. Pardee,

Manager, Engine and Propeller Directorate, Aircraft Certification Service.

[FR Doc. 02–32659 Filed 12–26–02; 8:45 am]

BILLING CODE 4910–13–P

DEPARTMENT OF TRANSPORTATION

Federal Aviation Administration

14 CFR Part 39

[Docket No. 2000–CE–59–AD]

RIN 2120–AA64

Airworthiness Directives; Air Tractor, Inc. Models AT–300, AT–400, AT–400A, AT–401, AT–401B, AT–402, AT–402A, AT–402B, AT–501, AT–502, and AT–502B Airplanes

AGENCY: Federal Aviation Administration, DOT.

ACTION: Notice of proposed rulemaking (NPRM).

SUMMARY: This document proposes to adopt a new airworthiness directive (AD) that would apply to certain Air Tractor, Inc. (Air Tractor) Models AT–300, AT–400, AT–400A, AT–401, AT–401B, AT–402, AT–402A, AT–402B, AT–501, AT–502, and AT–502B airplanes. This proposed AD would require you to repetitively inspect the vertical fin front spar fitting for cracks and replace any cracked fitting found. This proposed AD would also require you to install a steel doubler as a terminating action for the repetitive inspections. This proposed AD is the result of a report of failure of a 1/4-inch thick vertical fin front spar fitting. The actions specified by this proposed AD are intended to prevent failure of the vertical fin front spar fitting, which could result in failure of the rear spar fitting. Such failures could lead to loss of directional control of the airplane.

DATES: The Federal Aviation Administration (FAA) must receive any comments on this proposed rule on or before February 28, 2003.

ADDRESSES: Submit comments to FAA, Central Region, Office of the Regional Counsel, Attention: Rules Docket No. 2000–CE–59–AD, 901 Locust, Room 506, Kansas City, Missouri 64106. You may view any comments at this location

between 8 a.m. and 4 p.m., Monday through Friday, except Federal holidays. You may also send comments electronically to the following address: 9–ACE–7–Docket@faa.gov. Comments sent electronically must contain ''Docket No. 2000–CE–59–AD'' in the subject line. If you send comments electronically as attached electronic files, the files must be formatted in Microsoft Word 97 for Windows or ASCII text.

You may get service information that applies to this proposed AD from Air Tractor, Inc., P.O. Box 485, Olney, Texas 76374. You may also view this information at the Rules Docket at the address above.

FOR FURTHER INFORMATION CONTACT: Andy McAnaul, Aerospace Engineer, FAA, Fort Worth Airplane Certification Office, 2601 Meacham Boulevard, Fort Worth, Texas 76193–0150; telephone: (817) 222–5156; facsimile: (817) 222–5960.

SUPPLEMENTARY INFORMATION:

Comments Invited

How Do I Comment on This Proposed AD?

The FAA invites comments on this proposed rule. You may submit whatever written data, views, or arguments you choose. You need to include the rule's docket number and submit your comments to the address specified under the caption **ADDRESSES.** We will consider all comments received on or before the closing date. We may amend this proposed rule in light of comments received. Factual information that supports your ideas and suggestions is extremely helpful in evaluating the effectiveness of this proposed AD action and determining whether we need to take additional rulemaking action.

Are There Any Specific Portions of This Proposed AD I Should Pay Attention To?

The FAA specifically invites comments on the overall regulatory, economic, environmental, and energy aspects of this proposed rule that might suggest a need to modify the rule. You may view all comments we receive before and after the closing date of the rule in the Rules Docket. We will file a report in the Rules Docket that summarizes each contact we have with the public that concerns the substantive parts of this proposed AD.

How Can I Be Sure FAA Receives My Comment?

If you want FAA to acknowledge the receipt of your mailed comments, you must include a self-addressed, stamped postcard. On the postcard, write ''Comments to Docket No. 2000–CE–59–AD.'' We will date stamp and mail the postcard back to you.

Discussion

What Events Have Caused This Proposed AD?

The FAA received reports of two incidents, one in 1994 and one in 1995, in which the vertical fin front spar fitting and rear spar fitting failed, while in flight, on an Air Tractor Model AT–402 and a Model AT–502 airplane. Failure of the vertical fin front spar fitting causes the rear spar fitting to fail. These failures result in the vertical tail lying over against the elevator creating difficulty in controlling the airplane.

These vertical fin front spar fittings were made of 3/16-inch thick aluminum. Investigation revealed that Air Tractor models with the 3/16-inch front spar attach plates installed were subject to fatigue failure.

This unsafe condition was addressed in AD 95–20–06, Amendment 39–9384. AD 95–20–06 applied to airplanes with 3/16-inch thick and 1/4-inch thick aluminum fin front spar fittings installed.

In 1997, we issued AD 97–14–05, Amendment 39–10063, that supersedes AD 95–20–06. Further investigation revealed that only Air Tractor models with a 3/16-inch thick fin front spar fitting installed were developing cracks. Therefore, we issued AD 97–14–05 to remove Air Tractor models with a 1/4-inch thick fin front spar fitting installed from the applicability.

Recently, a Model AT–502 airplane was found with a cracked 1/4-inch thick fin front spar fitting. The crack was found during a routine inspection. The rear spar had not yet failed. This recent finding demonstrates that Air Tractor models with a 1/4-inch thick fin front spar fitting are subject to fatigue failure.

What Are the Consequences if the Condition Is Not Corrected?

This condition, if not detected and corrected, could result in structural failure of the vertical fin front spar fitting and eventually the rear spar fitting. Such failure could result in loss of directional control of the airplane.

Is There Service Information That Applies to This Subject?

Snow Engineering Company has issued Service Letter # 155, Revised November 27, 2002.

What Are the Provisions of This Service Information?

The service letter includes procedures for:

—Repetitively inspecting the vertical fin front spar fitting cracks;
—Replacing any cracked fitting found; and
—Installing a steel doubler as a terminating action for the repetitive inspections.

The FAA's Determination and an Explanation of the Provisions of This Proposed AD What Has FAA Decided?

After examining the circumstances and reviewing all available information related to the incidents described above, we have determined that:

—The unsafe condition referenced in this document exists or could develop on other Air Tractor Models AT–300, AT–400, AT–400A, AT–401, AT–401B, AT–402, AT–402A, AT–402B, AT–501, AT–502, and AT–502B airplanes of the same type design;
—The actions specified in the previously-referenced service information should be accomplished on the affected airplanes; and
—AD action should be taken in order to correct this unsafe condition.

What Would This Proposed AD Require?

This proposed AD would require you to incorporate the actions in the previously-referenced service bulletin.

Cost Impact

How Many Airplanes Would This Proposed AD Impact?

We estimate that this proposed AD affects 440 airplanes in the U.S. registry.

What Would Be the Cost Impact of This Proposed AD on Owners/Operators of the Affected Airplanes?

We estimate the following costs to accomplish the proposed inspection:

Labor cost	Parts cost	Total cost per airplane	Total cost on U.S. operators
4 workhours × $60 = $240	No parts required	$240	$240 × 440 = $105,600.

We estimate the following costs to accomplish the proposed modification:

Labor cost	Parts cost	Total cost per airplane
7 workhours × $60 = $420	Parts will be provided by Air Tractor at no charge to the customer	$420

Regulatory Impact

Would This Proposed AD Impact Various Entities?

The regulations proposed herein would not have a substantial direct effect on the States, on the relationship between the national government and the States, or on the distribution of power and responsibilities among the various levels of government. Therefore, it is determined that this proposed rule would not have federalism implications under Executive Order 13132.

Would This Proposed AD Involve a Significant Rule or Regulatory Action?

For the reasons discussed above, I certify that this proposed action (1) is not a ''significant regulatory action'' under Executive Order 12866; (2) is not a ''significant rule'' under DOT Regulatory Policies and Procedures (44 FR 11034, February 26, 1979); and (3) if promulgated, will not have a significant economic impact, positive or negative, on a substantial number of small entities under the criteria of the Regulatory Flexibility Act. A copy of the draft regulatory evaluation prepared for this action has been placed in the Rules Docket. A copy of it may be obtained by contacting the Rules Docket at the location provided under the caption **ADDRESSES**.

List of Subjects in 14 CFR Part 39

Air transportation, Aircraft, Aviation safety, Safety.

The Proposed Amendment

Accordingly, under the authority delegated to me by the Administrator, the Federal Aviation Administration proposes to amend part 39 of the Federal Aviation Regulations (14 CFR part 39) as follows:

PART 39—AIRWORTHINESS DIRECTIVES

1. The authority citation for part 39 continues to read as follows:

Authority: 49 U.S.C. 106(g), 40113, 44701.

§ 39.13 [Amended]

2. FAA amends § 39.13 by adding a new airworthiness directive (AD) to read as follows:

Air Tractor, Inc.: Docket No. 2000–CE–59–AD.

(a) *What airplanes are affected by this AD?* This AD affects the following airplane models and serial numbers that are certificated in any category:

Model	Serial numbers
AT–300, AT–400, and AT–400A	All serial numbers with a turbine powerplant and is retrofitted with a 1/4-inch thick aluminum vertical fin front spar fitting and an all-metal rudder.
AT–401 and AT–401B	401–0737 through 401–1015 and 401B–0737 through 401B–1015.
AT–402, AT–402A, and AT–402B	402–0737 through 402B–1015.
AT–501	501–0031 and subsequent that have been converted to turbine powerplants.
AT–502 and AT–502B	502–0031 through 502B–0398.

(b) *Who must comply with this AD?* Anyone who wishes to operate any of the airplanes identified in paragraph (a) of this AD must comply with this AD.

(c) *What problem does this AD address?* The actions specified by this AD are intended to prevent failure of the vertical fin front spar fittings, which could result in failure of the rear spar fitting. Such failures could lead to loss of directional control of the airplane.

(d) *What actions must I accomplish to address this problem?* To address this problem, you must accomplish the following:

Actions	Compliance	Procedures
(1) Inspect the vertical fin front spar fitting for cracks.	Upon the accumulation of 2,000 hours time-in-service (TIS) on the vertical fin front spar fitting or within the next 100 hours TIS after the effective date of this AD, whichever occurs later. If no cracks are found, repetitively inspect thereafter at intervals not to exceed 100 hours TIS.	In accordance with Snow Engineering Co. Service Letter #155, Revised November 27, 2002.
(2) If cracks are found during any inspection required in paragraph (d)(1) of this AD, replace the vertical fin front spar fitting.	Prior to further flight after the crack is found. Continue with the repetitive inspection requirements in paragraph (d)(1) of this AD until the terminating action is accomplished.	In accordance with Snow Engineering Co. Service Letter #155, Revised November 27, 2002.
(3) Modify the vertical fin front spar fitting by installing a steel doubler.	Within the next 2,000 hours TIS after the effective date of this AD. Installing the steel doubler is considered terminating action for the repetitive inspection requirements of this AD. The installation may be accomplished at any time provided the vertical fin front spar fitting is crack free.	In accordance with Snow Engineering Co. Service Letter #155, Revised November 27, 2002.

(e) *Can I comply with this AD in any other way?* You may use an alternative method of compliance or adjust the compliance time if:

(1) Your alternative method of compliance provides an equivalent level of safety; and

(2) The Manager, Ft. Worth Aircraft Certification Office (ACO), approves your alternative. Submit your request through an FAA Principal Maintenance Inspector, who may add comments and then send it to the Manager, Ft. Worth ACO.

Note: This AD applies to each airplane identified in paragraph (a) of this AD, regardless of whether it has been modified, altered, or repaired in the area subject to the requirements of this AD. For airplanes that have been modified, altered, or repaired so that the performance of the requirements of this AD is affected, the owner/operator must request approval for an alternative method of compliance in accordance with paragraph (e) of this AD. The request should include an assessment of the effect of the modification, alteration, or repair on the unsafe condition addressed by this AD; and, if you have not eliminated the unsafe condition, specific actions you propose to address it.

(f) *Where can I get information about any already-approved alternative methods of compliance?* Contact Andy McAnaul, Aerospace Engineer, FAA, Fort Worth Airplane Certification Office, 2601 Meacham Boulevard, Fort Worth, Texas 76193–0150; telephone: (817) 222–5156; facsimile: (817) 222–5960.

(g) *What if I need to fly the airplane to another location to comply with this AD?* The FAA can issue a special flight permit under sections 21.197 and 21.199 of the Federal Aviation Regulations (14 CFR 21.197 and 21.199) to operate your airplane to a location where you can accomplish the requirements of this AD.

(h) *How do I get copies of the documents referenced in this AD?* You may get copies of the documents referenced in this AD from Air Tractor, Inc., P.O. Box 485, Olney, Texas 76374. You may view these documents at FAA, Central Region, Office of the Regional Counsel, 901 Locust, Room 506, Kansas City, Missouri 64106.

Issued in Kansas City, Missouri, on December 20, 2002.

Michael Gallagher,

Manager, Small Airplane Directorate, Aircraft Certification Service.

[FR Doc. 02–32685 Filed 12–26–02; 8:45 am]

BILLING CODE 4910–13–P

DEPARTMENT OF THE TREASURY

Bureau of Alcohol, Tobacco and Firearms

27 CFR Parts 4, 5, 7 and 13

[Notice No. 964; Ref: T.D. ATF–483, Notice No. 954]

RIN 1512–AC87

Organic Claims in Labeling and Advertising of Alcohol Beverages (2002R–288P)

AGENCY: Bureau of Alcohol, Tobacco and Firearms (ATF), Treasury.

ACTION: Notice of proposed rulemaking; reopening of comment period.

SUMMARY: ATF reopens the comment period for Notice No. 954, a notice of proposed rulemaking published in the **Federal Register** on October 8, 2002. The proposed rule would amend our alcohol labeling and advertising rules to cross-reference the United States Department of Agriculture's National Organic Program rules. We are acting on a request to extend the comment period in order to provide sufficient time for all interested parties to respond to the issues raised in the notice.

DATES: Written comments must be received on or before March 27, 2003.

ADDRESSES: You may send comments to any of the following addresses:

- Chief, Regulations Division, Bureau of Alcohol, Tobacco and Firearms, P.O. Box 50221, Washington, DC 20091–0221 (Attn: Notice No. 954);
- 202–927–8525 (Facsimile);
- *nprm@atfhq.atf.treas.gov* (E-mail);
- *http://www.atf.treas.gov* (A comment form is available with the online copy of this notice.)

You may view copies of the temporary regulations, the notice of proposed rulemaking, the request for extension, and any comments received on the notice by appointment at the ATF Reference Library, Room 6480, 650 Massachusetts Avenue, NW., Washington, DC 20226, or at *http://www.atf.treas.gov* with the online copy of Notice No. 954.

FOR FURTHER INFORMATION CONTACT: Richard Evanchec, Alcohol Labeling and Formulation Division, Bureau of Alcohol, Tobacco & Firearms, 650 Massachusetts Avenue, NW., Washington, DC 20226; telephone 202–927–8140; e-mail *RJEvanchec@atfhq.atf.treas.gov.*

SUPPLEMENTARY INFORMATION:

Background

On October 8, 2002, ATF published a temporary rule (T.D. ATF–483, 67 FR 62856) to amend the alcohol labeling and advertising rules to cross-reference the United States Department of Agriculture's (USDA) National Organic Program (NOP) rules, which took effect October 21, 2002. Any alcohol beverage labeled or advertised with an organic claim must comply with both NOP rules administered by USDA and the applicable rules administered by ATF.

At the same time, we published a notice of proposed rulemaking (Notice No. 954, 67 FR 62860) to solicit comments on the temporary rule. The original comment period for Notice No. 954 closed on December 9, 2002.

Before the close of the original comment period, ATF received a request from the Wine Institute, a trade association, to extend the comment period for an additional 90 days. The Wine Institute, representing producers of 90% of the wine made in California, requested the extension in order to provide thoroughly researched comments that have been fully discussed among their members.

In consideration of the above, ATF finds that a reopening of the comment period is warranted.

Public Participation

See the ''Public Participation'' section of Notice No. 954 for detailed instructions on submitting and reviewing comments. Comments received on or before the new closing date will be carefully considered.

ATF will not recognize any submitted material as confidential and comments may be disclosed to the public. Any material that the commenter considers confidential or inappropriate for disclosure to the public should not be included in the comments. The name of the person submitting a comment is not exempt from disclosure.

Drafting Information

Marjorie Ruhf of the Regulations Division, Bureau of Alcohol, Tobacco & Firearms, drafted this notice.

List of Subjects

27 CFR Part 4

Advertising, Customs duties and inspection, Imports, Labeling, Packaging and containers, Reporting and recordkeeping requirements, Trade practices, Wine.

27 CFR Part 5

Advertising, Consumer protection, Customs duties and inspection, Imports, Labeling, Liquors, Packaging and containers.

27 CFR Part 7

Advertising, Beer, Customs duties and inspection, Imports, Labeling, Reporting and recordkeeping requirements, Trade practices.

27 CFR Part 13

Administrative practice and procedure, Alcohol and alcoholic beverages, Labeling.

Authority and Issuance

Notice No. 954 was issued under the authority of 27 U.S.C. 205.

Signed: December 18, 2002.

Bradley A. Buckles,

Director.

[FR Doc. 02–32614 Filed 12–26–02; 8:45 am]

BILLING CODE 4810–31–P

DEPARTMENT OF TRANSPORTATION

Coast Guard

33 CFR Part 117

[CGD01–02–143]

RIN 2115–AE47

Drawbridge Operation Regulations; Jamaica Bay and Connecting Waterways, NY

AGENCY: Coast Guard, DOT.

ACTION: Notice of proposed rulemaking.

SUMMARY: The Coast Guard proposes to temporarily change the drawbridge operating regulations governing the operation of the New York City highway bridge, at mile 0.8, across Mill Basin on Belt Parkway at New York City, New York. This temporary rule would allow the bridge to remain closed to vessel traffic from 7 a.m. on February 24, 2003 through 5 p.m. on April 14, 2003. This action is necessary to facilitate the installation of median safety barriers at the bridge.

DATES: Comments must reach the Coast Guard on or before January 27, 2003.

ADDRESSES: You may mail comments to Commander (obr), First Coast Guard District Bridge Branch, at 408 Atlantic Avenue, Boston, MA. 02110–3350, or deliver them to the same address between 7 a.m. and 3 p.m., Monday through Friday, except, Federal holidays. The telephone number is (617) 223–8364. The First Coast Guard District, Bridge Branch, maintains the public docket for this rulemaking. Comments and material received from the public, as well as documents indicated in this preamble as being available in the docket, will become part of this docket and will be available for inspection or copying at the First Coast Guard District, Bridge Branch, 7 a.m. to 3 p.m., Monday through Friday, except Federal holidays.

FOR FURTHER INFORMATION CONTACT: Joseph Schmied, Project Officer, First Coast Guard District, (212) 668–7165.

SUPPLEMENTARY INFORMATION:

Regulatory Information

The Coast Guard has determined that good cause exists under the Administrative Procedure Act 5 U.S.C. 553(d)(3) for a shortened comment period of thirty days and for making this rule effective less than thirty days after publication in the **Federal Register**. The Coast Guard believes this is reasonable because the work scheduled at the bridge should be conducted between February and April to take advantage of the time period when the bridge has the fewest number of opening requests. The Coast Guard believes that any delay encountered in this regulation's effective date would be unnecessary and contrary to the public interest because the work to be performed under this temporary rule is necessary safety modifications that are scheduled to be performed when the bridge receives the fewest number of opening requests.

Request for Comments

We encourage you to participate in this rulemaking by submitting comments or related material. If you do so, please include your name and address, identify the docket number for this rulemaking (CGD01–02–143), indicate the specific section of this document to which each comment applies, and give the reason for each comment. Please submit all comments and related material in an unbound format, no larger than 8 ½ by 11 inches, suitable for copying. If you would like to know if they reached us, please enclose a stamped, self-addressed postcard or envelope. We will consider all comments and material received during the comment period. We may change this proposed rule in view of them.

Public Meeting

We do not now plan to hold a public meeting. But you may submit a request for a meeting by writing to the First Coast Guard District, Bridge Branch, at the address under **ADDRESSES** explaining why one would be beneficial. If we determine that one would aid this rulemaking, we will hold one at a time and place announced by a later notice in the **Federal Register**.

Background and Purpose

The New York City highway bridge has a vertical clearance of 34 feet at mean high water, and 39 feet at mean low water in the closed position. The existing drawbridge operating regulations are listed at 33 CFR § 117.795(b).

The bridge owner, New York City Department of Transportation, requested a temporary bridge closure to install median safety barriers between the vehicular travel lanes at the bridge.

The bridge presently has no median safety barriers between the vehicular travel lanes that pass over the moveable lift spans at the bridge. There have been many serious head on automobile accidents at this bridge as a result of the absence of median safety barriers.

The average traffic count is 140,000 vehicles a day. There have been seven (7) head-on travel lane crossover accidents over the past several years, four (4) resulting in fatalities. These accidents resulted from the absence of a median safety barrier separating the opposite vehicular travel lanes.

The installation of the median safety barriers is considered necessary safety repairs that should be performed without delay.

In order to facilitate this structural work the bridge must remain in the closed position for the passage of vessel traffic from 7 a.m. on February 24, 2003 through 5 p.m. on April 14, 2003.

The time frame requested to perform this necessary safety work, February 24, 2003 through April 14, 2003, is the best time to perform this work because the bridge has historically had very few requests to open during that time period. In 2001 only one commercial vessel transit required a bridge opening and in 2002 only three commercial vessel transits required bridge openings between February 24 and April 14.

During the last ten days of the above closure the bridge will be balanced and tested. A limited number of bridge openings would be available for the passage of vessel traffic during the time period the bridge will be balanced and tested.

The Coast Guard believes this proposed closure is reasonable because this work is essential for public safety and will be performed when the bridge has the fewest number of requests to open.

Discussion of Proposed Rule

Under this temporary rule in § 117.795, paragraph (b) will be temporarily suspended and a new temporary paragraph (d) will be added to allow the New York City highway

bridge, mile 0.8, across Mill Basin, to remain closed to vessel traffic from 7 a.m. on February 24, 2003 through 5 p.m. on April 14, 2003.

Regulatory Evaluation

This proposed rule is not a ''significant regulatory action'' under section 3(f) of Executive Order 12866, Regulatory Planning and Review, and does not require an assessment of potential costs and benefits under 6(a)(3) of that Order. The Office of Management and Budget has not reviewed it under that Order. It is not ''significant'' under the regulatory policies and procedures of the Department of Transportation (DOT) (44 FR 11040, Feb. 26, 1979).

We expect the economic impact of this proposed rule to be so minimal that a full Regulatory Evaluation, under paragraph 10e of the regulatory policies and procedures of DOT, is unnecessary.

This conclusion is based on the fact that the waterway users who normally navigate Mill Basin are predominantly recreational vessels. There are four commercial facilities, two recreational vessel marinas, and two recreational/commercial vessel repair yards upstream from the bridge.

The proposed time period is historically the time period during which the fewest requests are made to open the bridge. Between February 24 and April 14, 2001, only one commercial vessel transit required the bridge to open. Only three commercial vessel transits required bridge openings during the same period in 2002.

Vessels that can pass under the bridge without a bridge opening may do so at all times.

Small Entities

Under the Regulatory Flexibility Act (5 U.S.C. 601–612), we considered whether this proposed rule would have a significant economic impact on a substantial number of small entities. The term ''small entities'' comprises small businesses, not-for-profit organizations that are independently owned and operated and are not dominant in their fields, and governmental jurisdictions with populations of less than 50,000.

The Coast Guard certifies under section 5 U.S.C. 605(b), that this proposed rule would not have a significant economic impact on a substantial number of small entities.

This conclusion is based on the fact that the waterway users who normally navigate Mill Basin are predominantly recreational vessels. There are four commercial facilities, two recreational vessel marinas, and two recreational/commercial vessel repair yards upstream from the bridge.

The proposed time period is historically the time period during which the fewest requests are made to open the bridge. Between February 24 and April 14, 2001, only one commercial vessel transit required the bridge to open. Only three commercial vessel transits required bridge openings during the same period in 2002.

Vessels that can pass under the bridge without a bridge opening may do so at all times.

If you think that your business, organization, or governmental jurisdiction qualifies as a small entity and that this rule would have a significant economic impact on it, please submit a comment (see **ADDRESSES**) explaining why you think it qualifies and how and to what degree this rule would economically affect it.

Collection of Information

This proposed rule would call for no new collection of information under the Paperwork Reduction Act of 1995 (44 U.S.C. 3501–3520.).

Federalism

A rule has implications for federalism under Executive Order 13132, Federalism, if it has a substantial direct effect on State or local governments and would either preempt State law or impose a substantial direct cost of compliance on them. We have analyzed this proposed rule under that Order and have determined that it does not have implications for federalism.

Unfunded Mandates Reform Act

The Unfunded Mandates Reform Act of 1995 (2 U.S.C. 1531–1538) requires Federal agencies to assess the effects of their discretionary regulatory actions. In particular, the Act addresses actions that may result in the expenditure by a State, local, or tribal government, in the aggregate, or by the private sector of $100,000,000 or more in any one year. Though this proposed rule would not result in such an expenditure, we do discuss the effects of this rule elsewhere in this preamble.

Taking of Private Property

This proposed rule would not effect a taking of private property or otherwise have taking implications under E.O. 12630, Governmental Actions and Interference with Constitutionally Protected Property Rights.

Civil Justice Reform

This proposed rule meets applicable standards in sections 3(a) and 3(b)(2) of Executive Order 12988, Civil Justice Reform, to minimize litigation, eliminate ambiguity, and reduce burden.

Protection of Children

We have analyzed this proposed rule under Executive Order 13045, Protection of Children from Environmental Health Risks and Safety Risks. This rule is not an economically significant rule and would not create an environmental risk to health or risk to safety that may disproportionately affect children.

Indian Tribal Governments

This proposed rule does not have tribal implications under Executive Order 13175, Consultation and Coordination with Indian Tribal Governments, because it would not have a substantial direct effect on one or more Indian tribes, on the relationship between the Federal Government and Indian tribes, or on the distribution of power and responsibilities between the Federal Government and Indian tribes.

To help the Coast Guard establish regular and meaningful consultation and collaboration with Indian and Alaskan Native tribes, we published a notice in the **Federal Register** (66 FR 36361, July 11, 2001) requesting comments on how to best carry out the Order. We invite your comments on how this proposed rule might impact tribal governments, even if that impact may not constitute a ''tribal implication'' under the Order.

Energy Effects

We have analyzed this proposed rule under Executive Order 13211, Actions Concerning Regulations That Significantly Affect Energy Supply, Distribution, or Use. We have determined that it is not a ''significant energy action'' under that order because it is not a ''significant regulatory action'' under Executive Order 12866 and is not likely to have a significant adverse effect on the supply, distribution, or use of energy. It has not been designated by the Administrator of the Office of Information and Regulatory Affairs as a significant energy action. Therefore, it does not require a Statement of Energy Effects under Executive Order 13211.

Environment

We considered the environmental impact of this proposed rule and concluded that, under figure 2–1, paragraph (32)(e), of Commandant Instruction M16475.1d, this proposed rule is categorically excluded from further environmental documentation because promulgation of drawbridge regulations have been found not to have

a significant effect on the environment. A written ''Categorical Exclusion Determination'' is not required for this rule.

List of Subjects in 33 CFR Part 117

Bridges.

Regulations

For the reasons set out in the preamble, the Coast Guard proposes to amend 33 CFR part 117 as follows:

PART 117—DRAWBRIDGE OPERATION REGULATIONS

1. The authority citation for part 117 continues to read as follows:

Authority: 33 U.S.C. 499; 49 CFR 1.46; 33 CFR 1.05–1(g); section 117.255 also issued under the authority of Pub. L. 102–587, 106 Stat. 5039.

2. From February 24, 2003 through April 14, 2003, in § 117.795, paragraph (b) is temporarily suspended, and a new temporary paragraph (d) is added, to read as follows:

§ 117.795 Jamaica Bay and Connecting Waterways.

* * * * *

(d) The draw of the New York City highway bridge, mile 0.8, across Mill Basin on Belt Parkway, need not open for the passage of vessel traffic from 7 a.m. on February 24, 2003 through 5 p.m. on April 14, 2003.

Dated: December 18, 2002.

J.L. Grenier,

Captain, Coast Guard, Acting Commander, First Coast Guard District.

[FR Doc. 02–32688 Filed 12–23–02; 2:42 pm]

BILLING CODE 4910–15–P

DEPARTMENT OF TRANSPORTATION

Coast Guard

33 CFR Part 165

[COTP Los Angeles-Long Beach 02–005]

RIN 2115–AA97

Security Zones; Liquefied Hazardous Gas Tank Vessels San Pedro Bay, CA

AGENCY: Coast Guard, DOT.

ACTION: Notice of proposed rulemaking.

SUMMARY: The Coast Guard proposes to revise current safety zone regulations by establishing security zones around and under all liquefied hazardous gas (LHG) tank vessels located on San Pedro Bay, California, in and near the ports of Los Angeles and Long Beach. These proposed security zones are needed for national security reasons to protect the public and ports from potential subversive acts. Entry into these zones will be prohibited unless specifically authorized by the Captain of the Port Los Angeles-Long Beach.

DATES: Comments and related material must reach the Coast Guard on or before February 7, 2003.

ADDRESSES: You may mail comments and related material to U.S. Coast Guard Marine Safety Office/Group Los Angeles-Long Beach, Waterways Management, 1001 S Seaside Avenue, Building 20, San Pedro, California, 90731. Waterways Management maintains the public docket for this rulemaking. Comments and material received from the public, as well as documents indicated in this preamble as being available in the docket, will become part of this docket and will be available for inspection or copying at Waterways Management between 8 a.m. and 4 p.m., Monday through Friday, except Federal holidays.

FOR FURTHER INFORMATION CONTACT: Lieutenant Junior Grade Rob Griffiths, Assistant Chief of Waterways Management, (310) 732–2020.

SUPPLEMENTARY INFORMATION:

Request for Comments

We encourage you to participate in this rulemaking by submitting comments and related material. If you do so, please include your name and address, identify the docket number for this rulemaking (COTP Los Angeles-Long Beach 02–005), indicate the specific section of this document to which each comment applies, and give the reason for each comment. Please submit all comments and related material in an unbound format, no larger than 8½ by 11 inches, suitable for copying. If you would like to know your submission reached us, please enclose a stamped, self-addressed postcard or envelope. We will consider all comments and material received during the comment period. We may change this proposed rule in view of them.

In our final rule, we will include a concise general statement of the comments received and identify any changes from the proposed rule based on the comments.

Public Meeting

We do not now plan to hold a public meeting. But you may submit a request for a meeting by writing to Waterways Management at the address under **ADDRESSES** explaining why one would be beneficial. If we determine that one would aid this rulemaking, we will hold one at a time and place announced by a separate notice in the **Federal Register**.

Background and Purpose

Since the September 11, 2001 terrorist attacks on the World Trade Center in New York, the Pentagon in Arlington, Virginia and Flight 93, the Federal Bureau of Investigation (FBI) has issued several warnings concerning the potential for additional terrorist attacks within the United States. In addition, the ongoing hostilities in Afghanistan and growing tensions in Iraq have made it prudent for U.S. ports to be on a higher state of alert because the al Qaeda organization and other similar organizations have declared an ongoing intention to conduct armed attacks on U.S. interests worldwide.

In its effort to thwart terrorist activity, the Coast Guard has increased safety and security measures on U.S. ports and waterways. As part of the Diplomatic Security and Antiterrorism Act of 1986 (Pub. L. 99–399), Congress amended section 7 of the Ports and Waterways Safety Act (PWSA), 33 U.S.C. 1226, to allow the Coast Guard to take actions, including the establishment of security and safety zones, to prevent or respond to acts of terrorism against individuals, vessels, or public or commercial structures. The Coast Guard also has authority to establish security zones pursuant to the Act of June 15, 1917, as amended by the Magnuson Act of August 9, 1950 (50 U.S.C. 191 *et seq.*) (the ''Magnuson Act'') and implementing regulations promulgated by the President in Subparts 6.01 and 6.04 of Part 6 of Title 33 of the Code of Federal Regulations.

In this particular rulemaking, to address the aforementioned security concerns and to take steps to prevent the catastrophic impact that a terrorist attack against a LHG tank vessel would have on the public interest, the Coast Guard proposes to revise current LHG safety zone regulations by establishing security zones around and under any LHG tank vessels entering, departing, or moored within the ports of Los Angeles and Long Beach. These proposed security zones will help the Coast Guard to prevent vessels or persons from engaging in terrorist actions against LHG tank vessels.

Current regulations issued under 33 CFR 165.1151 provide for safety zones around LHG tank vessels that are anchored, moored, or underway near the Los Angeles-Long Beach port areas. However, these safety zones are inadequate to address increased security requirements for LHG tank vessels.

On January 28, 2002, we published a temporary final rule (TFR) entitled ''Security Zones; San Pedro Bay, California'' in the **Federal Register** (67

FR 3814). In that rule, which expired on June 15, 2002, we temporarily replaced the LHG safety zones with security zones of a similar size and location.

On June 19, 2002, we published a TFR entitled ''Security Zones; Liquefied Hazardous Gas Tank Vessels, San Pedro Bay, CA'' in the **Federal Register** (67 FR 41625). In that rule, which is set to expire on December 21, 2002, we continue to temporarily replace the safety zones with security zones for LHG tank vessels near Los Angeles-Long Beach. Although we had anticipated using the effective period of this TFR to engage in notice and comment rulemaking, the Captain of the Port will extend the effective period again to allow sufficient time to properly develop permanent regulations tailored to the present and foreseeable security environment. Accordingly, this rulemaking proposes to make permanent the temporary security zones established on June 11, 2002.

Discussion of Proposed Rule

The Coast Guard proposes to revise 33 CFR 165.1151 by replacing the existing safety zones with moving and fixed security zones around any LHG tank vessels that are anchored, moored, or underway within the Los Angeles and Long Beach port areas. These proposed security zones will take effect upon the entry of any LHG tank vessel into the waters within 3 nautical miles outside of the Federal breakwaters encompassing San Pedro Bay and will remain in effect until the LHG tank vessel departs this 3 nautical mile regulatory limit. Section 104 of the Maritime Transportation Security Act (MTSA) of 2002 (Pub. L. 107–295, 116 Stat. 2064) extended the geographical reach of the Magnuson Act to 12 nautical miles seaward of the baseline of the United States and added civil penalty liability for violation. This proposed rule does not exercise the full extent of the geographical limit allowed by the PWSA and the recently amended Magnuson Act. The Coast Guard retains discretion to extend the geographical reach of this rule via notice and comment procedures to the 12 nautical mile limit should circumstances warrant such action.

This proposed rule, for security concerns, prohibits entry of any vessels or persons inside the security zone surrounding any LHG tank vessel. These security zones are within a 500 yard radius around any LHG tank vessels that are anchored at a designated anchorage; within a 500 yard radius around any LHG tank vessels that are moored, or in the process of mooring, at any berth within the Los Angeles or Long Beach port areas; and within 1000 yards ahead and 500 yards on each side and astern of any LHG tank vessels that are underway.

These security zones are needed for national security reasons to protect LHG tank vessels, the public, transiting vessels, adjacent waterfront facilities, and the ports from potential subversive acts, accidents, or other events of a similar nature. Entry into these zones will be prohibited unless specifically authorized by the Captain of the Port or his designated representative. Vessels already moored or anchored when these security zones take effect are not required to get underway to avoid either the moving or fixed zones unless specifically ordered to do so by the Captain of the Port or his designated representative.

Liquefied hazardous gas (LHG) as used in this section means a liquid containing one or more of the products listed in Table 127.005 of this part that is carried in bulk on board a tank vessel as liquefied petroleum gas, liquefied natural gas, or similar liquefied gas products.

Vessels or persons violating this section will be subject to the penalties set forth in 33 U.S.C. 1232 and 50 U.S.C. 192.

Pursuant to 33 U.S.C. 1232 and 33 CFR part 27, any violation of the security zone described herein is punishable by civil penalties (not to exceed $27,500 per violation, where each day of a continuing violation is a separate violation), criminal penalties (imprisonment up to 6 years and a maximum fine of $250,000), and in rem liability against the offending vessel and license sanctions. Any person who violates this section using a dangerous weapon or who engages in conduct that causes bodily injury or fear of imminent bodily injury to any officer authorized to enforce this regulation also faces imprisonment up to 12 years.

Vessels or persons violating this section are also subject to the penalties set forth in 50 U.S.C. 192: Seizure and forfeiture of the vessel to the United States; a maximum criminal fine of $10,000; imprisonment up to 10 years; and a civil penalty of not more than $25,000 for each day of a continuing violation.

The Captain of the Port will enforce these zones and may request the use of the resources and personnel of other government agencies to assist in the patrol and enforcement of the proposed rule. The Captain of the Port retains discretion to initiate Coast Guard civil penalty action against non-compliant parties pursuant to the PWSA or the Magnuson Act, or, refer appropriate cases to the cognizant U.S. Attorney Office for disposition. This rule is proposed under the authority of 33 U.S.C. 1226 in addition to the authority contained in 33 U.S.C. 1231.

Regulatory Evaluation

This proposed rule is not a ''significant regulatory action'' under section 3(f) of Executive Order 12866, Regulatory Planning and Review, and does not require an assessment of potential costs and benefits under section 6(a)(3) of that Order. The Office of Management and Budget has not reviewed it under that Order. It is not ''significant'' under the regulatory policies and procedures of the Department of Transportation (DOT) (44 FR 11040, February 26, 1979).

We expect the economic impact of this proposed rule to be so minimal that a full Regulatory Evaluation under paragraph 10e of the regulatory policies and procedures of DOT is unnecessary.

The effect of this regulation will not be significant because the zones will encompass only a small portion of the waterway for a limited period of time. Furthermore, vessels will be able to pass safely around the zones and may be allowed to enter these zones on a case-by-case basis with permission of the Captain of the Port, or his designated representative.

The sizes of the zones are the minimum necessary to provide adequate protection for the LHG tank vessels, their crews, cargo, other vessels operating in the vicinity of the LHG tank vessels and their crews, adjoining areas, and the public. The entities most likely to be affected are commercial vessels transiting the main ship channels of Los Angeles or Long Beach and pleasure craft engaged in recreational activities and sightseeing. These security zones will prohibit commercial vessels from meeting or overtaking any LHG tank vessels in the main ship channels, effectively prohibiting use of the channels. However, the moving security zones will only be effective during LHG tank vessel transits, which last for approximately 30 minutes. Most vessels will be able to safely transit around these zones while a LHG tank vessel is moored or at anchor in the Ports of Los Angeles and Long Beach.

Small Entities

Under the Regulatory Flexibility Act (5 U.S.C. 601–612), we have considered whether this proposed rule would have a significant economic impact on a substantial number of small entities. The term ''small entities'' comprises small businesses, not-for-profit organizations that are independently

owned and operated and are not dominant in their fields, and governmental jurisdictions with populations of less than 50,000.

The Coast Guard certifies under 5 U.S.C. 605(b) that this proposed rule would not have a significant economic impact on a substantial number of small entities. We expect this proposed rule may affect the following entities, some of which may be small entities: The owners and operators of private and commercial vessels intending to transit or anchor in these small portions of the ports of Los Angeles and Long Beach near LHG tank vessels covered by these security zones. The impact to these entities would not, however, be significant since these zones are proposed to encompass only small portions of the waterway for limited periods of time while the LHG tank vessels are transiting, moored, or in the anchorage. Delays, if any, are expected to be less than thirty minutes in duration.

Small vessel traffic can pass safely around the area and vessels engaged in recreational activities, sightseeing, and commercial fishing have ample space outside of the security zone to engage in these activities. When LHG tank vessels are at anchor, vessel traffic will have ample room to maneuver around the security zone. The outbound or inbound transit of a LHG tank vessel will last about 30 minutes. Although this proposed regulation would prohibit simultaneous use of portions of the channel, this prohibition is of a short duration. And while a LHG tank vessel is moored, commercial traffic and small recreational traffic will have an opportunity to coordinate movement through the security zone with the COTP or his or her designated representative.

If you think that your business, organization, or governmental jurisdiction qualifies as a small entity and that this rule would have a significant economic impact on it, please submit a comment (*see* **ADDRESSES**) explaining why you think it qualifies and how and to what degree this rule would economically affect it.

Assistance for Small Entities

Under section 213(a) of the Small Business Regulatory Enforcement Fairness Act of 1996 (Pub. L. 104–121), we want to assist small entities in understanding this proposed rule so that they can better evaluate its effects on them and participate in the rulemaking. If the proposed rule would affect your small business, organization, or governmental jurisdiction and you have questions concerning its provisions or options for compliance, please contact the person indicated in **FOR FURTHER INFORMATION CONTACT.**

Collection of Information

This proposed rule would call for no new collection of information under the Paperwork Reduction Act of 1995 (44 U.S.C. 3501–3520).

Federalism

A rule has implications for federalism under Executive Order 13132, Federalism, if it has a substantial direct effect on State or local governments and would either preempt State law or impose a substantial direct cost of compliance on them. We have analyzed this proposed rule under that Order and have determined that it does not have implications for federalism.

Unfunded Mandates Reform Act

The Unfunded Mandates Reform Act of 1995 (2 U.S.C. 1531–1538) requires Federal agencies to assess the effects of their discretionary regulatory actions. In particular, the Act addresses actions that may result in the expenditure by a State, local, or tribal government, in the aggregate, or by the private sector of $100,000,000 or more in any one year. Though this proposed rule would not result in such an expenditure, we do discuss the effects of this rule elsewhere in this preamble.

Taking of Private Property

This proposed rule would not effect a taking of private property or otherwise have taking implications under Executive Order 12630, Governmental Actions and Interference with Constitutionally Protected Property Rights.

Civil Justice Reform

This proposed rule meets applicable standards in sections 3(a) and 3(b)(2) of Executive Order 12988, Civil Justice Reform, to minimize litigation, eliminate ambiguity, and reduce burden.

Protection of Children

We have analyzed this proposed rule under Executive Order 13045, Protection of Children from Environmental Health Risks and Safety Risks. This rule is not an economically significant rule and would not create an environmental risk to health or risk to safety that might disproportionately affect children.

Indian Tribal Governments

This proposed rule does not have tribal implications under Executive Order 13175, Consultation and Coordination with Indian Tribal Governments, because it would not have a substantial direct effect on one or more Indian tribes, on the relationship between the Federal Government and Indian tribes, or on the distribution of power and responsibilities between the Federal Government and Indian tribes. To help the Coast Guard establish regular and meaningful consultation and collaboration with Indian and Alaskan Native Tribes, on July 11, 2002, we published a notice in the **Federal Register** (66 FR 36361) requesting comments on how to best carry out the order. We invite your comments on how this proposed rule might impact tribal governments, even if that impact may not constitute a ''tribal implication'' under the Order.

Energy Effects

We have analyzed this proposed rule under Executive Order 13211, Actions Concerning Regulations That Significantly Affect Energy Supply, Distribution, or Use. We have determined that it is not a ''significant energy action'' under that Order because it is not a ''significant regulatory action'' under Executive Order 12866 and is not likely to have a significant adverse effect on the supply, distribution, or use of energy. It has not been designated by the Administrator of the Office of Information and Regulatory Affairs as a significant energy action. Therefore, it does not require a Statement of Energy Effects under Executive Order 13211.

Environment

We have considered the environmental impact of this proposed rule and concluded that, under figure 2–1, paragraph (34)(g), of Commandant Instruction M16475.lD, this rule is categorically excluded from further environmental documentation because we are proposing to establish security zones. A ''Categorical Exclusion Determination'' is available in the docket where indicated under **ADDRESSES.**

List of Subjects in 33 CFR Part 165

Harbors, Marine safety, Navigation (water), Reporting and recordkeeping requirements, Security measures, Waterways.

For the reasons discussed in the preamble, the Coast Guard proposes to amend 33 CFR part 165 as follows:

PART 165—REGULATED NAVIGATION AREAS AND LIMITED ACCESS AREAS

1. The authority citation for part 165 continues to read as follows:

Authority: 33 U.S.C. 1231; 50 U.S.C. 191, 33 CFR 1.05–1(g), 6.04–1, 6.04–6, and 160.5; 49 CFR 1.46.

2. Revise § 165.1151 to read as follows:

§ 165.1151 Security Zones; Liquefied Hazardous Gas Tank Vessels, San Pedro Bay, California

(a) *Definition.* ''Liquefied Hazardous Gas'' as used in this section means a liquid containing one or more of the products listed in Table 127.005 of this part that is carried in bulk on board a tank vessel as liquefied petroleum gas, liquefied natural gas, or similar liquefied gas products.

(b) *Location.* The following areas are security zones:

(1) All waters, extending from the surface to the sea floor, within a 500 yard radius around any liquefied hazardous gas (LHG) tank vessel that is anchored at a designated anchorage either inside the Federal breakwaters bounding San Pedro Bay or outside at designated anchorages within 3 nautical miles of the breakwater;

(2) The shore area and all waters, extending from the surface to the sea floor, within a 500 yard radius around any LHG tank vessel that is moored, or in the process of mooring, at any berth within the Los Angeles or Long Beach port areas inside the Federal breakwaters bounding San Pedro Bay;

(3) All waters, extending from the surface to the sea floor, within 1000 yards ahead and 500 yards on each side and astern of any LHG tank vessel that is underway either on the waters inside the Federal breakwaters bounding San Pedro Bay or on the waters within 3 nautical miles seaward of the Federal breakwaters.

(c) *Regulations.* (1) In accordance with the general regulations in § 165.33 of this part, entry into or remaining in these zones is prohibited unless authorized by the Coast Guard Captain of the Port Los Angeles-Long Beach, or his or her designated representative.

(2) Persons desiring to transit the area of the security zone may contact the Captain of the Port at telephone number (800) 221–USCG (8724) or on VHF–FM channel 16 (156.8 MHz) to seek permission to transit the area. If permission is granted, all persons and vessels shall comply with the instructions of the Captain of the Port or his or her designated representative.

(3) When any LHG tank vessels approach within 500 yards of a vessel that is moored or anchored, the stationary vessel must stay moored or anchored while it remains within the LHG tank vessel's security zone unless it is either ordered by or given permission from the Captain of the Port Los Angeles-Long Beach to do otherwise.

(d) *Authority.* In addition to 33 U.S.C. 1231 and 50 U.S.C. 191, the authority for this section includes 33 U.S.C. 1226.

(e) *Enforcement.* The U.S. Coast Guard may be assisted in the patrol and enforcement of these security zones by the Los Angeles Port Police and the Long Beach Police Department.

Dated: November 26, 2002.

J.M. Holmes,

Captain, Coast Guard, Captain of the Port, Los Angeles-Long Beach.

[FR Doc. 02–32722 Filed 12–26–02; 8:45 am]

BILLING CODE 4910–15–P

DEPARTMENT OF TRANSPORTATION

Coast Guard

33 CFR Part 165

[CGD13–02–018]

RIN 2115–AA97

Security Zone: Protection of Tank Ships, Puget Sound, WA

AGENCY: Coast Guard, DOT.

ACTION: Notice of Proposed Rulemaking.

SUMMARY: In order to promptly respond to an increase in the Coast Guard's maritime security posture, the Coast Guard proposes to establish regulations for the safety or security of tank ships in the navigable waters of Puget Sound and adjacent waters, Washington. This proposed security zone, when activated by the Captain of the Port Puget Sound, will provide for the regulation of vessel traffic in the vicinity of tank ships in the navigable waters of the United States.

DATES: Comments and related material must reach the Coast Guard on or before February 25, 2003.

ADDRESSES: You may mail comments and related material to Commanding Officer, Marine Safety Office Puget Sound, 1519 Alaskan Way South, Seattle, Washington 98134. Comments and material received from the public, as well as documents indicated in this preamble as being available in the docket, will become part of this docket and will be available for inspection or copying at Marine Safety Office Puget Sound, 1519 Alaskan Way South, Seattle, Washington 98134, between 8 a.m. and 4 p.m., Monday through Friday, except Federal holidays.

FOR FURTHER INFORMATION CONTACT: LT A. L. Praskovich, c/o Captain of the Port Puget Sound, (206) 217–6232.

SUPPLEMENTARY INFORMATION:

Request for Comments

The Coast Guard encourages interested persons to participate in this rulemaking by submitting written data, views, or arguments. Persons submitting comments should include their names, addresses, identify this rulemaking (CGD13–02–018) and the specific section of this proposal to which each comment applies, and give the reason for each comment. Please submit two copies of all comments and attachments in an unbound format, no larger than 8½ by 11 inches, suitable for copying and electronic filing. Persons wanting acknowledgement of receipt of comments should enclose stamped, self-addressed postcards or envelopes.

The Coast Guard will consider all comments received during the comment period. It may change this proposal in view of the comments.

The Coast Guard plans no public hearing. Persons may request a public hearing by writing to the Marine Safety Office at the address under **ADDRESSES.** The request should include the reasons why a hearing would be beneficial. If it is determined that the opportunity for oral presentations will aid this rulemaking, the Coast Guard will hold a public hearing at a time and place to be announced by a later notice in the **Federal Register**

Background and Purpose

Recent events highlight the fact that there are hostile entities operating with the intent to harm U.S. National Security. The President has continued the national emergencies he declared following the September 11, 2001 terrorist attacks (67 FR 58317 (Sept. 13, 2002) (continuing national emergency with respect to terrorist attacks), 67 FR 59447 (Sept. 20, 2002) continuing national emergency with respect to persons who commit, threaten to commit or support terrorism)). The President also has found pursuant to law, including the Magnuson Act (50 U.S.C. 191 et seq.), that the security of the United States is and continues to be endangered following the attacks (E.O. 13273, 67 FR 56215 (Sept. 3, 2002) (security endangered by disturbances in international relations of U.S. and such disturbances continue to endanger such relations).

On October 15, 2002, the Captain of the Port Puget Sound issued a TFR (67 FR 66335, CGD13–02–015, 33 CFR section 165.T13–011) establishing tank ship protection zones, which expires on April 15, 2003. The Coast Guard, through this action, intends to assist tank ships by establishing a permanent security zone that upon activation by

the Captain of the Port would exclude persons and vessels from the immediate vicinity of all tank ships. Entry into this zone will be prohibited unless authorized by the Captain of the Port or his designee. The Captain of the Port may be assisted by other federal, state, or local agencies.

Discussion of Rule

This proposed rule, for safety and security concerns, would control vessel movement in a regulated area surrounding tank ships. This proposed rule would be activated from time to time by the Captain of the Port Puget Sound for such time as he deems necessary to prevent damage or injury to any vessel or waterfront facility, to safeguard ports, harbors, territories, or waters of the United States or to secure the observance of the rights and obligations of the United States. The Captain of the Port Puget Sound will cause notice of the activation of this security zone to be made by all appropriate means to effect the widest publicity among the affected segments of the public. For the purpose of this regulation, a tank ship means a self-propelled tank vessel constructed or adapted primarily to carry oil or hazardous material in bulk as cargo or cargo residue in the cargo spaces. The definition of tank ship does not include tank barges. All vessels within 500 yards of a tank ship shall operate at the minimum speed necessary to maintain a safe course, and shall proceed as directed by the official patrol. No vessel, except a public vessel (defined below), is allowed within 100 yards of a tank ship, unless authorized by the official patrol or tank ship master. Vessels requesting to pass within 100 yards of a tank ship shall contact the official patrol on VHF–FM channel 16 or 13. The official patrol or tank ship master may permit vessels that can only operate safely in a navigable channel to pass within 100 yards of a tank ship in order to ensure a safe passage in accordance with the Navigation Rules. In addition, measures or directions issued by Vessel Traffic Service Puget Sound pursuant to 33 CFR Part 161 shall take precedence over the regulations in this proposed rule. Similarly, commercial vessels anchored in a designated anchorage area may be permitted to remain at anchor within 100 yards of passing tank ships. Public vessels for the purpose of this Rule are vessels owned, chartered, or operated by the United States, or by a State or political subdivision thereof.

Regulatory Evaluation

This proposed rule is not a ''significant regulatory action'' under section 3(f) of Executive Order 12866, Regulatory Planning and Review, and does not require an assessment of potential costs and benefits under section 6(a)(3) of that Order. The Office of Management and Budget has not reviewed it under that Order. It is not ''significant'' under the regulatory policies and procedures of the Department of Transportation (DOT) (44 FR 11040, February 26, 1979).

We expect the economic impact of this proposed rule to be so minimal that a full Regulatory Evaluation under paragraph 10e of the regulatory policies and procedures of DOT is unnecessary.

Although this proposed rule would restrict access to the regulated area, the effect of this proposed rule will not be significant because: (i) Individual tank ship security zones are limited in size; (ii) the official patrol or tank ship master may authorize access to the tank ship security zone; (iii) the tank ship security zone for any given transiting tank ship will effect a given geographical location for a limited time; and (iv) the Coast Guard will make notifications via maritime advisories so mariners can adjust their plans accordingly.

Small Entities

Under the Regulatory Flexibility Act (5 U.S.C. 601–612), we have considered whether this proposed rule would have a significant economic impact on a substantial number of small entities. The term ''small entities'' comprises small businesses, not-for-profit organizations that are independently owned and operated and are not dominant in their fields, and governmental jurisdictions with populations of less than 50,000.

The Coast Guard certifies under 5 U.S.C. 605(b) that this proposed rule would not have a significant economic impact on a substantial number of small entities.

This proposed rule would affect the following entities, some of which may be small entities: the owners or operators of vessels intending to operate near or anchor in the vicinity of tank ships in the navigable waters of the United States.

This proposed rule would not have a significant economic impact on a substantial number of small entities for the following reasons: (i) Individual tank ship security zones are limited in size; (ii) The official patrol or tank ship master may authorize access to the tank ship security zone; (iii) the tank ship security zone for any given transiting tank ship will affect a given geographic location for a limited time; and (iv) the Coast Guard will make notifications via maritime advisories so mariners can adjust their plans accordingly.

Assistance for Small Entities

Under section 213(a) of the Small Business Regulatory Enforcement Fairness Act of 1996 (Pub. L. 104–121), we want to assist small entities in understanding this proposed rule so that they can better evaluate its effects on them and participate in the rulemaking. If the rule would affect your small business, organization, or governmental jurisdiction and you have questions concerning its provisions or options for compliance, please contact one of the points of contact listed under **FOR FURTHER INFORMATION CONTACT.**

Small businesses may send comments on the actions of Federal employees who enforce, or otherwise determine compliance with, Federal regulations to the Small Business and Agriculture Regulatory Enforcement Ombudsman and the Regional Small Business Regulatory Fairness Boards. The Ombudsman evaluates these actions annually and rates each agency's responsiveness to small business. If you wish to comment on actions by employees of the Coast Guard, call 1–888–REG–FAIR (1–888–734–3247).

Collection of Information

This proposed rule calls for no new collection of information under the Paperwork Reduction Act of 1995 (44 U.S.C. 3501–3520).

Federalism

A rule has implications for federalism under Executive Order 13132, Federalism, if it has a substantial direct effect on State or local governments and would either preempt State law or impose a substantial direct cost of compliance on them. We have analyzed this proposed rule under that Order and have determined that it does not have implications for federalism.

Unfunded Mandates Reform Act

The Unfunded Mandates Reform Act of 1995 (2 U.S.C. 1531–1538) requires Federal agencies to assess the effects of their discretionary regulatory actions. In particular, the Act addresses actions that may result in the expenditure by a State, local, or tribal government, in the aggregate, or by the private sector of $100,000,000 or more in any one year. Though this proposed rule will not result in such an expenditure, we do discuss the effects of this rule elsewhere in this preamble.

Taking of Private Property

This proposed rule will not effect a taking of private property or otherwise have taking implications under Executive Order 12630, Governmental Actions and Interference with Constitutionally Protected Property Rights.

Civil Justice Reform

This proposed rule meets applicable standards in sections 3(a) and 3(b)(2) of Executive Order 12988, Civil Justice Reform, to minimize litigation, eliminate ambiguity, and reduce burden.

Protection of Children

We have analyzed this proposed rule under Executive Order 13045, Protection of Children from Environmental Health Risks and Safety Risks. This proposed rule is not an economically significant rule and does not create an environmental risk to health or risk to safety that may disproportionately affect children.

Indian Tribal Governments

The Coast Guard recognizes the rights of Native American Tribes under the Stevens Treaties. Moreover, the Coast Guard is committed to working with Tribal Governments to implement local policies to mitigate tribal concerns. Given the flexibility of this proposed rule to accommodate the special needs of mariners in the vicinity of tank ships, and the Coast Guard's commitment to working with the Tribes, we have determined that tank ship security and fishing rights protection need not be incompatible and therefore have determined that this Proposed Rule does not have tribal implications under Executive Order 13175, Consultation and Coordination with Indian Tribal Governments, because it does not have a substantial direct effect on one or more Indian tribes, on the relationship between the Federal Government and Indian tribes, or on the distribution of power and responsibilities between the Federal Government and Indian tribes.

Energy Effects

We have analyzed this proposed rule under Executive Order 13211, Actions Concerning Regulations That Significantly Affect Energy Supply, Distribution, or Use. We have determined that it is not a ''significant energy action'' under that order because it is not a ''significant regulatory action'' under Executive Order 12866 and is not likely to have a significant adverse effect on the supply, distribution, or use of energy. It has not been designated by the Administrator of the Office of Information and Regulatory Affairs as a significant energy action. Therefore, it does not require a Statement of Energy Effects under Executive Order 13211.

Environment

The Coast Guard's preliminary review indicates this proposed rule is categorically excluded from further environmental documentation under figure 2–1, paragraph 34(g) of Commandant Instruction M16475.1D. The environmental analysis and Categorical Exclusion Determination will be prepared and be available in the docket for inspection and copying where indicated under **ADDRESSES.** All standard environmental measures remain in effect.

List of Subjects in 33 CFR Part 165

Harbors, Marine safety, Navigation (water), Reporting and record keeping requirements, Security measures, Waterways.

For the reasons discussed in the preamble, the Coast Guard proposes to amend 33 CFR part 165 as follows:

PART 165—REGULATED NAVIGATION AREAS AND LIMITED ACCESS AREAS

1. The authority citation for Part 165 continues to read as follows:

Authority: 33 U.S.C. 1231; 50 U.S.C. 191; 33 CFR 1.05–1(g), 6.04–1, 6.04–6 and 160.5; 49 CFR 1.46.

2. Add § 165.1313 to read as follows:

§ 165.1313 Security Zone Regulations, Tank Ship Protection Zone, Puget Sound and adjacent waters, Washington

(a) *General.* The tank ship protection zone established by this section will be effective only upon activation by the Captain of the Port Puget Sound. Captain of the Port Puget Sound will cause notice of the activation of the tank ship protection zone to be made by all appropriate means to effect the widest publicity among the affected segments of the public including publication in the **Federal Register** as practicable, in accordance with 33 CFR 165.7(a). Such means of announcement may also include but are not limited to, Broadcast Notice to Mariners or Local Notice to Mariners. The Captain of the Port Puget Sound will issue a Broadcast Notice to Mariners and Local Notice to Mariners notifying the public when the tank ship protection zone is deactivated.

(b) The following definitions apply to this section:

(1) *Federal Law Enforcement Officer* means any employee or agent of the United States government who has the authority to carry firearms and make warrantless arrests and whose duties involve the enforcement of criminal laws of the United States.

(2) *Navigable waters of the United States* means those waters defined as such in 33 CFR part 2.

(3) *Navigation Rules* means the Navigation Rules, International-Inland.

(4) *Official Patrol* means those persons designated by the Captain of the Port to monitor a tank ship protection zone, permit entry into the zone, give legally enforceable orders to persons or vessels with in the zone and take other actions authorized by the Captain of the Port. Persons authorized in paragraph (k) of this section to enforce this section are designated as the Official Patrol.

(5) *Public vessels* means vessels owned, chartered, or operated by the United States, or by a State or political subdivision thereof.

(6) *Tank Ship Protection Zone* is a 500-yard regulated area of water surrounding tank ships that is necessary to provide for the safety or security of these vessels.

(7) *Tank Ship* means a self-propelled tank vessel that is constructed or adapted primarily to carry oil or hazardous material in bulk as cargo or cargo residue in the cargo spaces. The definition of tank ship does not include tank barges.

(8) *Washington Law Enforcement Officer* means any General Authority Washington Peace Officer, Limited Authority Washington Peace Officer, or Specially Commissioned Washington Peace Officer as defined in Revised Code of Washington section 10.93.020.

(c) This section applies to any vessel or person in the navigable waters of the United States east of 123 degrees, 30 minutes West Longitude. [Datum: NAD 1983]

(d) Upon activation by the Captain of the Port Puget Sound, a tank ship protection zone exists around tank ships at all times in the navigable waters of the United States to which this section applies, whether the tank ship is underway, anchored, or moored.

(e) The Navigation Rules shall apply at all times within a tank ship protection zone.

(f) When within a tank ship protection zone all vessels shall operate at the minimum speed necessary to maintain a safe course and shall proceed as directed by the official patrol or tank ship master. No vessel or person is allowed within 100 yards of a tank ship, unless authorized by the official patrol or tank ship master.

(g) To request authorization to operate within 100 yards of a tank ship, contact the official patrol or tank ship master on VHF–FM channel 16 or 13.

(h) When conditions permit, the official patrol or tank shipmaster should:

(1) Permit vessels constrained by their navigational draft or restricted in their ability to maneuver to pass within 100 yards of a tank ship in order to ensure a safe passage in accordance with the Navigation Rules;

(2) Permit commercial vessels anchored in a designated anchorage area to remain at anchor when within 100 yards of a passing tank ship; and

(3) Permit vessels that must transit via a navigable channel or waterway to pass within 100 yards of a moored or anchored tank ship with minimal delay consistent with security.

(i) *Exemption.* Public vessels as defined in paragraph (b) above are exempt from complying with this section.

(j) *Exception.* 33 CFR Part 161 promulgates Vessel Traffic Service regulations. Measures or directions issued by Vessel Traffic Service Puget Sound pursuant to 33 CFR Part 161 shall take precedence over the regulations in this section.

(k) *Enforcement.* Any Coast Guard commissioned, warrant or petty officer may enforce the rules in this section. In the navigable waters of the United States to which this section applies, when immediate action is required and representatives of the Coast Guard are not present or not present in sufficient force to provide effective enforcement of this section in the vicinity of a tank ship, any Federal Law Enforcement Officer or Washington Law Enforcement Officer may enforce the rules contained in this section pursuant to 33 CFR § 6.04–11. In addition, the Captain of the Port may be assisted by other federal, state or local agencies in enforcing this section.

Dated: December 9, 2002.

D. Ellis,

Captain, Coast Guard, Captain of the Port, Puget Sound.

[FR Doc. 02–32721 Filed 12–26–02; 8:45 am]

BILLING CODE 4910–15–P

DEPARTMENT OF VETERANS AFFAIRS

38 CFR Ch. I

United Agenda of Federal Regulatory and Deregulatory Actions; Correction

AGENCY: Department of Veterans Affairs.

ACTION: Proposed rule; correction.

SUMMARY: This document contains an entry that was inadvertently omitted from the Unified Agenda of Federal Regulatory and Deregulatory Actions, published on December 9, 2002.

In the issue of Monday, December 9, 2002, the following text should have appeared on page 75137:

Office of the Inspector General

3050 Referral of Information Regarding Criminal Violations

Priority: Substantive, Nonsignificant.

Legal Authority: 5 U.S.C. app. 3; 38 U.S.C. 301; 38 U.S.C. 902

CFR Citation: 38 CFR 0.800; 38 CFR 0.810; 38 CFR 0.820; 38 CFR 0.830; 38 CFR 0.840; 38 CFR 14.560; 38 CFR 14.563; 38 CFR 17.170.

Legal Deadline: None.

Abstract: This document amends the Department of Veterans Affairs (VA) conduct regulations to provide that VA employees are required to report information about possible criminal activity to appropriate authorities. The VA Police and the VA Office of Inspector General, the Department's two law enforcement entities, will receive such information, will investigate those cases within their respective jurisdiction, and will refer proper cases for prosecution. In addition, this document clarifies and more accurately states the investigative jurisdiction of the Office of Inspector General. The intended effect of this action is to protect the VA, its employees, and the veterans it serves by having information about criminal activity reported and properly investigated as quickly and thoroughly as possible to prevent additional harm and to bring criminal perpetrators to justice.

TIMETABLE

Action	Date	FR Cite
Final Action ...	12/00/02	

Regulatory Flexibility Analysis Required: No.

Small Entities Affected: No.

Government Levels Affected: Federal.

Agency Contact: Michael R. Bennett, Attorney Advisor, Department of Veterans Affairs, Office of Inspector General, 810 Vermont Avenue NW., Washington, DC 20420, Phone: 202–565–8678, Fax: 202–565–8113.

RIN: 2900–AL31.

Roland Halstead,

Acting Director, Office of Regulatory Law.

[FR Doc. 02–32628 Filed 12–26–02; 8:45 am]

BILLING CODE 8320–01–M

ENVIRONMENTAL PROTECTION AGENCY

40 CFR Parts 9, 122, 123, 124, and 130

[WH–FRL–7430–5]

Withdrawal of Revisions to the Water Quality Planning and Management Regulation and Revisions to the National Pollutant Discharge Elimination System Program in Support of Revisions to the Water Quality Planning and Management Regulation

AGENCY: Environmental Protection Agency (EPA).

ACTION: Notice of proposed rulemaking.

SUMMARY: Today's action proposes to withdraw the final rule entitled ''Revisions to the Water Quality Planning and Management Regulation and Revisions to the National Pollutant Discharge Elimination System Program in Support of Revisions to the Water Quality Planning and Management Regulation (''the July 2000 rule'') published in the **Federal Register** on July 13, 2000. The July 2000 rule amended and clarified existing regulations implementing a section of the Clean Water Act (CWA), which requires States to identify waters that are not meeting applicable water quality standards and to establish pollutant budgets, called Total Maximum Daily Loads (TMDLs), to restore the quality of those waters. The July 2000 rule also amended EPA's National Pollutant Discharge Elimination System (''NPDES'') regulations to include provisions addressing implementation of TMDLs through NPDES permits. The July 2000 rule has never become effective; it is currently scheduled to take effect on April 30, 2003. Regulations that EPA promulgated in 1985 and amended in 1992 remain the regulations in effect for implementing the TMDL Program. Today, EPA is proposing to withdraw the July 2000 rule, rather than allow it to go into effect or again propose to extend its effective date. EPA believes that significant changes would need to be made to the July 2000 rule before it could serve as the blueprint for an efficient and effective TMDL Program. Furthermore, EPA needs additional time beyond April 2003 to decide whether and how to revise the currently-effective regulations implementing the TMDL Program in a way that will best achieve the goals of the CWA.

DATES: Written comments on this proposed rule should be submitted by January 27, 2003. Comments provided electronically will be considered timely

if they are submitted by 11:59 p.m. January 27, 2003.

ADDRESSES: Comments may be submitted electronically, by mail, or through hand delivery/courier. Follow the detailed instructions as provided in section C, regarding Additional Information for Commenters of the **SUPPLEMENTARY INFORMATION** section.

FOR FURTHER INFORMATION CONTACT: For information about today's proposal, contact: Francoise M. Brasier, U.S. EPA Office of Wetlands, Oceans and Watersheds (4503T), U.S. Environmental Protection Agency, 1200 Pennsylvania Avenue, NW., Washington, DC 20460, phone (202) 566–2385.

SUPPLEMENTARY INFORMATION:

A. Authority

Clean Water Act sections 106, 205(g), 205(j), 208, 301, 302, 303, 305, 308, 319, 402, 501, 502, and 603; 33 U.S.C. 1256, 1285(g), 1285(j), 1288, 1311, 1312, 1313, 1315, 1318, 1329, 1342, 1361, 1362, and 1373.

B. Entities Potentially Regulated by the Proposed Rule

TABLE OF POTENTIALLY REGULATED ENTITIES

Category	Examples of potentially regulated entities
Governments	States, Territories and Tribes with CWA responsibilities.

This table is not intended to be exhaustive, but rather provides a guide for readers regarding entities likely to be regulated by this action. This table lists the types of entities that EPA is now aware could potentially be regulated by this action. Other types of entities not listed in this table could also be regulated. To determine whether you may be regulated by this action, you should carefully examine the applicability criteria in § 130.20 of title 40 of the Code of Federal Regulations. If you have any questions regarding the applicability of this action to you, consult the person listed in the **FOR FURTHER INFORMATION CONTACT** section.

C. Additional Information for Commenters

1. How Can I Get Copies of This Document and Other Related Information ?

a. *Docket.* EPA has established an official public docket for this action under Docket ID No. OW–2002–0037. The official public docket is the collection of materials that is available for public viewing at the Water Docket in the EPA Docket Center (EPA/DC), EPA West, Room B–102, 1301 Constitution Ave., NW., Washington, DC. The EPA Docket Center Public Reading Room is open from 8:30 a.m. to 4:30 p.m., Monday through Friday, excluding legal holidays. The telephone number for the Public Reading Room is (202) 566–1744, and the telephone number for the Water Docket is (202) 566–2426. For access to docket materials, please call ahead to schedule an appointment. A reasonable fee may be charged for copying.

b. *Electronic Access.* An electronic version of the public docket is available through EPA's electronic public docket and comment system, EPA Dockets. You may use EPA Dockets at *http://www.epa.gov/edocket* to submit or view public comments, access the index listing of the contents of the official public docket, and to access those documents in the public docket that are available electronically. Once in the system, select ''search,'' then key in the appropriate docket identification number.

Certain types of information will not be placed in the EPA Dockets. Information claimed as CBI and other information whose disclosure is restricted by statute, which is not included in the official public docket, will not be available for public viewing in EPA's electronic public docket. EPA's policy is that copyrighted material will not be placed in EPA's electronic public docket but will be available only in printed, paper form in the official public docket. Although not all docket materials may be available electronically, you may still access any of the publicly available docket materials through the docket facility identified in the preceding section C.1.a.

For public commenters, it is important to note that EPA's policy is that public comments, whether submitted electronically or in paper, will be made available for public viewing in EPA's electronic public docket as EPA receives them and without change, unless the comment contains copyrighted material, CBI, or other information whose disclosure is restricted by statute. When EPA identifies a comment containing copyrighted material, EPA will provide a reference to that material in the version of the comment that is placed in EPA's electronic public docket. The entire printed comment, including the copyrighted material, will be available in the public docket.

Public comments submitted on computer disks that are mailed or delivered to the docket will be transferred to EPA's electronic public docket. Public comments that are mailed or delivered to the Docket will be scanned and placed in EPA's electronic public docket. Where practical, physical objects will be photographed, and the photograph will be placed in EPA's electronic public docket along with a brief description written by the docket staff.

2. How and To Whom Do I Submit Comments?

You may submit comments electronically, by mail, or through hand delivery/courier. To ensure proper receipt by EPA, identify the appropriate docket identification number in the subject line on the first page of your comments. Please ensure that your comments are submitted within the specified comment period. Comments received after the close of the comment period will be marked ''late.'' EPA is not required to consider these late comments. Commenters who want EPA to acknowledge receipt of their comments should include a self-addressed, stamped envelope.

a. *Electronically.* If you submit an electronic comment as prescribed below, EPA recommends that you include your name, mailing address, and an e-mail address or other contact information in the body of your comment. Also include this contact information on the outside of any disk or CD ROM you submit, and in any cover letter accompanying the disk or CD ROM. This ensures that you can be identified as the submitter of the comment and allows EPA to contact you in case EPA cannot read your comment due to technical difficulties or needs further information on the substance of your comment. EPA's policy is that EPA will not edit your comment, and any identifying or contact information provided in the body of a comment will be included as part of the comment that is placed in the official public docket, and made available in EPA's electronic public docket. If EPA cannot read your comment due to technical difficulties and cannot contact you for clarification, EPA may not be able to consider your comment.

i. *EPA Dockets.* Your use of EPA's electronic public docket to submit comments to EPA electronically is EPA's preferred method for receiving comments. Go directly to EPA Dockets at *http://www.epa.gov/edocket* and follow the online instructions for submitting comments. Once in the system, select ''search,'' and then key in Docket ID No. OW–2002–0037. The system is an ''anonymous access'' system, which means EPA will not

know your identity, e-mail address, or other contact information unless you provide it in the body of your comment.

ii. *E-mail.* Comments may be sent by electronic mail (e-mail) to *ow-docket@epa.gov.,* Attention Docket ID No. OW–2002–0037. Electronic comments must be submitted as a WordPerfect 5.1, 6.1, or 8 file or as an ASCII file, avoiding the use of special characters. Electronic comments on this action may be filed on line at many Federal Depository Libraries. In contrast to EPA's electronic public docket, EPA's e-mail system is not an ''anonymous access'' system. If you send an e-mail comment directly to the Docket without going through EPA's electronic public docket, EPA's e-mail system automatically captures your e-mail address. E-mail addresses that are automatically captured by EPA's e-mail system are included as part of the comment that is placed in the official public docket, and made available in EPA's electronic public docket.

iii. *Disk or CD ROM.* You may submit comments on a disk or CD ROM that you mail to the mailing address identified in section C.2.b., which follows. These electronic submissions will be accepted in WordPerfect 5.1, 6.1 or 8 file or an ASCII file format. Avoid the use of special characters and any form of encryption.

b. *By Mail.* Send an original and three copies of your comments and enclosures (including references) to: Water Docket, Environmental Protection Agency, Mailcode: 4101T, 1200 Pennsylvania Ave., NW., Washington, DC, 20460, Attention Docket ID No. OW–2002–0037.

c. *By Hand Delivery or Courier.* Deliver your comments to: the Water Docket in the EPA Docket Center (EPA/DC), EPA West, Room B–102, 1301 Constitution Ave., NW., Washington, DC, Attention Docket ID No. OW–2002–0037. Such deliveries are only accepted during the Docket's normal hours of operation from 8:30 a.m. to 4:30 p.m., Monday through Friday, excluding legal holidays as identified in section C.1.a.

d. *By Facsimile.* No facsimiles (faxes) will be accepted.

3. How Should I Submit CBI To the Agency?

Do not submit information through EPA's electronic public docket or by e-mail that you consider to be CBI. You may claim information that you submit to EPA as CBI by marking any part or all of that information as CBI. (If you submit CBI on disk or CD ROM, mark the outside of the disk or CD ROM as CBI and then identify electronically within the disk or CD ROM the specific information that is CBI). Information so marked will not be disclosed except in accordance with procedures set forth in 40 CFR part 2.

In addition to one complete version of the comment that includes any information claimed as CBI, a copy of the comment that does not contain the information claimed as CBI must be submitted for inclusion in the public docket and EPA's electronic public docket. If you submit the copy that does not contain CBI on disk or CD ROM, mark the outside of the disk or CD ROM clearly that it does not contain CBI. Information not marked as CBI will be included in the public docket and EPA's electronic public docket without prior notice. If you have any questions about CBI or the procedures for claiming CBI, please consult the person identified in the **FOR FURTHER INFORMATION CONTACT** section.

4. What Should I Consider as I Prepare My Comments for EPA?

You may find the following suggestions helpful for preparing your comments:

- Explain your views as clearly as possible.
- Describe any assumptions that you used.
- Provide any technical information and/or data you used that support your views.
- If you estimate potential burden or costs, explain how you arrived at your estimate.
- Provide specific examples to illustrate your concerns.
- Offer alternatives.
- Make sure to submit your comments by the comment period deadline identified.
- To ensure proper receipt by EPA, identify the appropriate docket identification number in the subject line on the first page of your response. It would also be helpful if you provided the name, date, and **Federal Register** citation related to your comments.

I. Basis for Today's Action and Request for Comment

A. What Is the Statutory and Regulatory Background for Today's Action?

TMDLs are one of the many tools Congress authorized in the CWA to help achieve the Act's main objective to ''restore and maintain the chemical, physical, and biological integrity of the Nation's waters.'' (CWA section 101(a)). Section 303(d) of the CWA requires States to identify and establish a priority ranking for waters for which technology-based effluent limitations required by section 301 are not stringent enough to implement applicable water quality standards, establish TMDLs for the pollutants causing impairment in those waters, and submit to EPA, from time to time, the list of impaired waters and TMDLs. EPA must review and approve or disapprove lists and TMDLs within 30 days of the time they are submitted. If EPA disapproves a list or a TMDL, EPA must establish the list or TMDL. In addition, some courts have interpreted the statute as requiring EPA to establish lists and TMDLs when a State fails to do so.

Listing impaired waters and establishing TMDLs for waters impaired by pollutants from point and nonpoint sources does not, by itself, create any new or additional implementation authorities to control point or nonpoint sources. Section 303(d) of the Act requires that TMDLs ''be established at a level necessary to implement the applicable water quality standards,'' and section 303(d)(2) requires a State to incorporate TMDLs into its ''current plan'' under section 303(e). Under the section 303(e) process, States develop and update state-wide water quality management (WQM) plans, produced in accordance with sections 208 and 303(e) of the Act, to direct implementation of the requirements of the Act.

Under CWA section 402, the NPDES Program regulates the ''discharge of a pollutant,'' other than dredged or fill materials from a ''point source'' into ''waters of the United States.'' The CWA and NPDES regulations define ''discharge of a pollutant,'' ''point source,'' and ''waters of the United States.'' The NPDES Program is administered at the Federal level by EPA unless a State, tribe or U.S. Territory assumes the program after receiving approval by the Federal government. Currently, 45 States have received approval to administer the NPDES Program in their States. Under section 402, discharges of pollutants to waters of the United States are authorized by an individual NPDES permit or a general permit applicable to multiple similar facilities or activities. NPDES permits commonly contain numerical limits on the amounts of specified pollutants that may be discharged and may specify best management practices (BMPs) designed to minimize water quality impacts. These numerical effluent limitations and BMPs or other non-numerical effluent limitations implement both technology-based and water quality-based requirements of the Act. Technology-based limitations represent the degree of control that can be achieved by point sources using various levels of pollution control technology. If

necessary to achieve or maintain compliance with applicable water quality standards, NPDES permits must contain water quality-based limitations more stringent than the applicable technology-based requirements. One basis for water quality-based effluent limits in NPDES permits is a wasteload allocation from a TMDL. *See* 40 CFR 122.44(d)(1)(vii). The NPDES Program regulations appear at 40 CFR parts 122–125.

EPA issued regulations governing identification of impaired waters and establishment of TMDLs in 1985 and revised them in 1992 (§§ 130.2 and 130.7). Among other things, these currently effective regulations provide that:

- States must identify those waters still requiring TMDLs because technology-based effluent limitations required by the CWA or more stringent effluent limitations and other pollution controls (*e.g.,* management measures) required by local, State, or Federal authority are not stringent enough to implement applicable water quality standards (WQS) (§ 130.7(b)(1));
- These lists of waters not meeting WQS must be submitted to EPA every two years (on April 1 of every even-numbered year) (§ 130.7(d)(1));
- The lists must include an identification of the pollutant or pollutants causing or expected to cause the impairment, and a priority ranking of the waters that identifies the waters targeted for TMDL development in the next two years (§ 130.7(b)(4));
- States, in developing lists, must assemble and evaluate all existing and readily available water quality-related data and information (§ 130.7(b)(5));
- States must submit with each list a description of the methodology used to develop the list and provide EPA with a rationale for any decision not to use any existing and readily available water quality-related data and information (§ 130.7(b)(6));
- A TMDL is the sum of individual wasteload allocations for point sources (WLA), load allocations for nonpoint sources and natural background (LA). Wasteload allocations are defined as the portion of a receiving water's loading capacity that is allocated to one of its point sources of pollution. (§ 130.2 (h) and (i));
- Load allocations are defined as the portion of a receiving water's loading capacity that is attributed to nonpoint sources of pollution or natural background. They are best estimates of the loading, which can range from reasonably accurate estimates to gross allotments. Where possible, natural, background and nonpoint source loads should be distinguished (§ 130.2(g));
- TMDLs must be established at levels necessary to attain and maintain the applicable narrative and numerical water quality standards with seasonal variations and a margin of safety that takes into account any lack of knowledge concerning the relationship between effluent limitations and water quality (§ 130.7(c)(1));
- If best management practices (BMPs) or other nonpoint source pollution controls make more stringent load allocations practicable, the wasteload allocations can be made less stringent allowing for nonpoint source control tradeoffs (§ 130.2(i));
- EPA must approve or disapprove lists and TMDLs within 30 days of submission. If disapproved, EPA must establish a list or a TMDL within 30 days (§ 130.7(d)(2));
- The process for involving the public in the development of lists of impaired waters and TMDLs must be described in the State's Continuing Planning Process (CPP) (§ 130.7(a));
- Under proper technical conditions, TMDLs can be calculated for all pollutants (43 FR 60665).

The 1985 regulation also identifies specific elements that comprise the WQM plan, including the ''identification of implementation measures necessary to carry out the plan, including financing, the time needed to carry out the plan, and the economic, social and environmental impact of carrying out the plan in accordance with section 208(b)(2)(E)'' (§ 130.6(c)(6)). Once approved by EPA, TMDLs are incorporated into these State WQM plans (§ 130.7(d)(2)). Permitting authorities implement wasteload allocations included in a TMDL through enforceable water quality-based discharge limits in NPDES permits authorized under section 402 of the CWA. The primary mechanism for implementing nonpoint source load allocations within TMDLs is through the State section 319 nonpoint source management program, coupled with a wide variety of other State, local, tribal, and Federal programs (which may be regulatory, non-regulatory, or incentive-based, depending on the program), as well as voluntary action by committed citizens.

B. Why Did EPA Promulgate the July 2000 Rule?

On July 13, 2000, EPA published a final rule revising the TMDL regulations previously promulgated in 1985 and revised in 1992 (65 FR 43586). In 1996, the Agency determined that there was a need for a comprehensive evaluation of implementation of section 303(d) requirements. The reasons for this need were threefold. First, EPA was concerned with the lack of progress in the program despite the regulations issued by EPA in 1985 and 1992, and a series of policy memoranda including a 1997 request that States work to improve the rate of establishing TMDLs. Second, stakeholders had raised concerns with the lack of clarity and consistency in the program. Third, environmental and public interest organizations had started filing lawsuits alleging that EPA should be held accountable, under the CWA, for its failure to oversee and supplement inadequate State 303(d) listing and TMDL establishment efforts.

EPA convened a committee under the Federal Advisory Committee Act (TMDL FACA Committee) to undertake such an evaluation and make recommendations for improving implementation of the TMDL Program, including recommendations for revised regulations and guidance. In 1998, after careful deliberation, the Committee submitted to EPA its final report containing more than 100 recommendations, a subset of which required regulatory changes (Report of the Federal Advisory Committee on the Total Maximum Daily Load (TMDL) Program. EPA 100–R–98–006, July 1998). The committee reached consensus on most recommendations although minority reports were filed on some issues. These recommendations guided EPA in the development of the proposed rule of August 23, 1999, (64 FR 46012) and the final rule of July 13, 2000 (65 FR 43586). EPA proposed changes intended to resolve issues concerning the identification of impaired waterbodies by promoting more comprehensive inventories of impaired waters. The rule was also intended to improve implementation of TMDLs by requiring, as part of the TMDL, implementation plans containing lists of actions and expeditious schedules to reduce pollutant loadings. Finally, EPA proposed changes to the NPDES permitting regulations to assist in implementing TMDLs and to better address point source discharges to waters not meeting water quality standards prior to establishment of a TMDL.

C. Why Did EPA Undertake a Further Review of the TMDL Regulations and Delay the Effective Date of the July 2000 Rule?

The July 2000 rule was controversial from the outset. The August 1999 proposal attracted approximately 34,000

comments, a significant number of which criticized various aspects of the proposed rule. Before and after promulgation, the rule generated considerable controversy, as expressed in Congressional action, letters, testimony, public meetings, and litigation. Even before it was published in the **Federal Register**, Congress prohibited EPA from implementing the final rule through a spending prohibition included in the Military Construction Appropriations Act: FY 2000 Supplemental Appropriations (Pub. L. 106–426). This provision prohibited EPA from using funds made available for fiscal years 2000 and 2001 ''to make a final determination on or implement'' the July 2000 TMDL rule. Anticipating that this amendment would go into effect, the July 2000 rule provided that the effective date of the regulations would be 30 days after the date that Congress allowed EPA to implement the regulations. The spending prohibition was scheduled to expire on September 30, 2001, and, barring further action by Congress or EPA, the rule would have gone into effect 30 days later on October 30, 2001. Additionally, in the FY 2001 Appropriations Bill, Congress directed EPA to contract with the National Academy of Sciences' National Research Council (NRC) to evaluate the adequacy of scientific methods and approaches currently available to support development and implementation of TMDLs. In the Conference Report #106–988 describing the VA/HUD and Independent Agencies FY 2001 Appropriations Act, Congress also requested that the Agency prepare a comprehensive assessment of the development and implementation costs of the TMDL Program.

States, business and industry groups, agriculture and forestry organizations, and local governments questioned the scope, complexity, and cost of, and the legal authority for, many of the new provisions of the rule. Environmental groups expressed concern that the rule did not do enough to address water quality impairments from nonpoint sources, and argued that the new schedules in the rule unlawfully extend CWA deadlines. Stakeholder concerns were reflected in legal challenges to the July 2000 rule by a broad array of litigants. Ten petitions for review were filed by States, industrial and agricultural groups, and environmental organizations asserting that many of EPA's revisions to the TMDL regulations were either unlawful under the Administrative Procedure Act or exceeded the Agency's authority under the CWA. These petitions, which identified more than fifty alleged legal defects in the July 2000 rule, were ultimately consolidated in the *American Farm Bureau Federation et al* v. *Whitman* (No. 00–1320) for the District of Columbia Circuit United States Court of Appeals. In addition, several other stakeholders have intervened in these lawsuits. Some of the issues raised by the petitioners include the scope and content of the section 303(d) list, the elements of an approvable TMDL, scheduling and EPA backstopping of TMDLs, and the change to the NPDES regulations addressing EPA's authority to object to expired State permits. The litigation over the July 2000 rule is currently stayed pending EPA's determination regarding whether, and to what extent, that rule should be revised.

Because of these significant concerns, EPA, on August 9, 2001, proposed to delay the effective date of the July 2000 rule by 18 months (66 FR 41817) until April 30, 2003, to allow time for reconsideration of specific aspects of the rule. EPA stated that it intended to use the time to analyze the findings and recommendations of the NRC report; to discuss ideas for improving the TMDL Program with a broad array of interested parties; and, if deemed appropriate, to revise the regulations through a notice and comment process. The Agency believed that an 18-month delay of the July 2000 rule's effective date was the minimum time necessary to conduct a meaningful consultation process, analyze and reconcile the recommendations of the various stakeholders and promulgate desired program changes. In the same notice EPA proposed to revise from April 1, 2002, until October 1, 2002, the date by which States are required to submit their 303(d) lists of impaired waters for 2002. Following receipt and evaluation of comments, on October 18, 2001, EPA published in the **Federal Register** a final rule delaying for 18 months, until April 30, 2003, the effective date of the July 2000 rule and delaying until October 1, 2002, the due date for the States' 2002 submission of section 303(d) lists of impaired waters (66 FR 53044).

As part of the effort to solicit additional input on the TMDL Program, EPA published a notice in the **Federal Register** announcing the dates, locations and discussion themes for five ''public listening sessions'' addressing the Agency's TMDL Program and possible revisions to the TMDL rule (66 FR 51429). EPA announced that it would use the information received at these public listening sessions as it considered changes to the regulations that implement the TMDL Program and related provisions in the NPDES Program. These listening sessions were held in the following cities, each with a primary focus on a specific theme:

- Chicago, Illinois (Oct. 22–23, 2001): ''Implementation of TMDLs Addressing Nonpoint Sources.''
- Sacramento, California (Nov. 1–2, 2001): ''Scope and Content of TMDLs.''
- Atlanta, Georgia (Nov. 7–8, 2001): ''EPA's Role, the Pace/Schedule for Development of TMDLs, and NPDES Permitting Pre and Post TMDL.''
- Oklahoma City, Oklahoma (Nov. 15–16, 2001): ''Listing Impaired Waters.''
- Washington DC (Dec. 11, 2001): ''Comprehensive Discussion of All Listing and TMDL Issues.''

Nearly 1,000 people attended the five meetings. At each meeting attendees, representing a broad cross-section of stakeholder interests, heard presentations from EPA representatives and other members of the meeting's ''listening panel,'' and participated in facilitated small-group discussions focused on the meeting's overall theme and the specific discussion questions. The meetings provided participants an opportunity to exchange ideas with various stakeholder groups, including representatives from petitioners and interveners in litigation, and members of the public. EPA has published detailed summaries on its website of all the listening sessions, including oral and written comments from each meeting as well as letters received afterwards. (*http://www.epa.gov/owow/tmdl/meetings*). These meetings demonstrated that there continued to be a wide divergence of opinion regarding whether and how the Agency should revise the implementing regulations for the TMDL and NPDES Programs.

Subsequent to the public listening sessions, EPA met individually with numerous public and private stakeholder groups to solicit additional input on how best to modify the TMDL and NPDES regulations. These stakeholder groups represented a broad array of interested parties, and included the following: The Association of State and Interstate Water Pollution Control Administrators; Environmental Council of States; Western Governors' Association; Clean Water Coalition; Clean Water Network; Advisory Council on Water Information; Interstate Commission on Water Policy; Association of Metropolitan Sewerage Agencies; Water Environment Federation; American Chemical Council; American Farm Bureau; Earthjustice Legal Defense Fund; Ocean Conservancy; Natural Resources Defense Council; and TMDL rule petitioners.

Between August 2001 and April 2002, EPA also attended periodic meetings with the United States Department of Agriculture (USDA) to solicit input on ways to improve the TMDL Program and to discuss approaches to taking advantage of USDA and State planning processes to support watershed-based TMDLs. EPA formed an internal EPA workgroup in October 2001 to begin evaluating the future direction and scope of the TMDL Program. Draft concepts developed by the workgroup have been shared with stakeholder groups, and the workgroup has developed a draft proposal that would amend the regulations at 40 CFR part 130 as well as some NPDES Program provisions.

D. Why Is EPA Proposing To Withdraw the July 2000 TMDL Rule?

Despite the efforts described above, the Agency needs more time to evaluate whether and how to revise the currently-effective regulations. At this point, EPA is not sure how long that effort will take. However, EPA believes that continuing to examine the regulatory needs of the TMDL and NPDES Programs when faced with the impending April 30, 2003, effective date for the July 2000 rule sends confusing signals to the States and other interested parties about which set of rules they should be prepared to implement. Due to the significant controversy, pending litigation and lack of stakeholder consensus on key aspects of the July 2000 rule, it has become apparent to EPA that, as promulgated, the July 2000 rule cannot function as the blueprint for an efficient and effective TMDL Program without significant revisions. Moreover, the existence of the approaching April 30, 2003, effective date for the July 2000 rule—a mere four months away—is beginning to act as an unnecessary and artificial distraction from an orderly completion of the Agency's efforts now underway to chart the future direction and scope of the TMDL Program. Consequently, EPA is proposing to withdraw the July 2000 TMDL rule so that the Agency can consider whether and how to revise the TMDL rules without concern that those efforts will be adversely affected by the July 2000 rule's effective date.

Withdrawal of the July 2000 rule will not adversely affect the increasing momentum of State TMDL Programs across the country. Should EPA ultimately decide to withdraw the July 2000 rule, the effect of such a withdrawal would be that the TMDL Program would continue to operate under the rules promulgated in 1985, as amended in 1992, at 40 CFR part 130. Thus, there would be no gap in regulatory coverage. Indeed, States would continue to establish lists of impaired waters and TMDLs according to the currently-effective regulations. Pursuant to these rules, States were required to submit new lists of impaired waters by October 1, 2002, and as described in section A above, these currently effective rules provide a comprehensive set of requirements for the identification of impaired waters, establishment of TMDLs and incorporation of TMDLs into State water quality management plans.

One impetus for the July 2000 rule was concern that States were not making enough progress in listing impaired waters, and scheduling, developing and implementing TMDLs. However, since 1996, when EPA established a Federal Advisory Committee to provide recommendations for revisions to the TMDL regulations, there have been many non-regulatory improvements to the TMDL Program that have resulted in States increasing the quality of their section 303(d) lists and greatly accelerating the pace of their TMDL development. States and EPA are continuing to establish TMDLs in accordance with schedules agreed upon between the States and EPA as well as in accordance with court orders and consent decrees (this is discussed in greater detail, below). The Agency has also increased outreach to States and issued TMDL technical guidance, monitoring guidance, and CWA section 319 nonpoint source guidance to help States develop better methods to more accurately and consistently monitor and list impaired waters, establish TMDLs, and identify the most appropriate and cost-effective methods and approaches to implement the TMDL Program. This outreach and guidance has taken the form of detailed policy memoranda, national guidance documents, technical protocol documents for developing pollutant-specific TMDLs, and information on best management practices for controlling nonpoint sources. A complete list of these documents can be found at EPA's website: *http://oaspub.epa.gov/waters/national_rept.control.* Key policy documents include: ''New Policies for Establishing and Implementing Total Maximum Daily Loads (TMDLs)'', August 8, 1997; ''Guidance: Use of Fish and Shellfish Advisories and Classifications in 303(d) and 305(b) Listing Decisions''—Oct. 24, 2000; ''Supplemental Guidelines for the Award of Section 319 Nonpoint Source Grants to States and Territories in FY 2002 and Subsequent Years''—September 5, 2001; ''2002 Integrated Water Quality Monitoring and Assessment Report Guidance''—November 19, 2001; '' Proposed Water Quality Trading Policy''—May 15, 2002; (*http://www.epa.gov/owow/watershed/trading/tradingpolicy.html*); and ''EPA Review of 2002 Section 303(d) Lists and Guidelines for Reviewing TMDLs under Existing Regulations issued in 1992''—May 20, 2002.

States are the primary entities responsible for developing and implementing TMDLs under the CWA and EPA recognizes the financial burden faced by States in this effort. From FY 1999 to 2002, EPA has provided the States almost $30 million for TMDL-specific activities, including section 303(d) list development, water quality assessments/screening, and pollutant modeling support. States have used this funding to secure technical support through contracts and through grants to universities and not-for-profit organizations and institutions. The Agency also allowed the use of a portion of State grants for water program administration (CWA section 106 grants) and nonpoint source programs (CWA section 319 grants) for developing and implementing TMDLs. The guidelines for use of the section 319 funds recommend focusing incremental 319 grant dollars ($100 million) on implementing on-the-ground measures and practices that would reduce pollutant loads in accordance with approved TMDLs for waters that are impaired in whole or in part by nonpoint sources. In addition, since 1998 the Agency has spent more than $11 million to support development of technical guidance for developing TMDLs and identifying the most appropriate and efficient best management practices for nonpoint sources.

Helped by these programmatic initiatives, States have made considerable progress in developing TMDLs. Moreover, mechanisms are in place to ensure that those efforts do not diminish. Currently, there are 22 States in which EPA is under court order, generally resulting from entry of a consent decree, to establish TMDLs if States do not do so. Twelve consent decrees have been entered since 1999, the year the July 2000 TMDL rule revisions were proposed. Between 1996 and 1999, EPA and the States established approximately 800 TMDLs. Since then, and despite the fact that the July 2000 rule never became effective, EPA and the States have established more than an additional 7,000 TMDLs; and they continue to improve the pace at which TMDLs are established. Given

this progress and the States' adoption since 1998 of schedules for TMDL development, EPA anticipates no reduction in the pace of TMDLs being developed even if the July 2000 rule does not take effect.

Another aim of the July 2000 rule was to promote more comprehensive State inventories of impaired waters. Under authority of the rules promulgated in 1985 and 1992, EPA issued the 2002 Integrated Water Quality Monitoring and Assessment Report Guidance (November 19, 2001) to promote a more integrated and comprehensive system of accounting for the nation's water quality attainment status. The guidance recommends that States submit an ''Integrated Report'' that will satisfy CWA requirements for both section 305(b) water quality reports and section 303(d) lists. The objectives of this guidance are to strengthen State monitoring programs, encourage timely monitoring to support decision making, increase numbers of waters monitored, and provide a full accounting of all waters and uses. The guidance encourages a rotating basin approach, and strengthened State assessment methodologies, and is intended to improve public confidence in water quality assessments and 303(d) lists. EPA extended the date for submission of 2002 lists by six months (66 FR 53044) to allow States and Territories time to incorporate some or all of the recommendations suggested by EPA in this 2002 Integrated Water Quality Monitoring and Assessment Report Guidance. At this time, most States and Territories have submitted a 2002 report which incorporates some or all of the elements of the guidance. In addition to releasing the Integrated Reporting Guidance, EPA also held five stakeholder meetings in 2001 and 2002 to review and comment on a best practices guide that EPA was developing for States on consolidated assessment and listing methodologies. This guidance ''Consolidated Listing and Assessment Methodology-Toward a Compendium of Best Practices'' was released in July 2002.

For all the above reasons, the Agency believes that it is reasonable to withdraw the July 2000 rule. Continuing to evaluate whether and how to revise the current regulations under the April 30, 2003, effective date deadline is confusing to the States and other interested parties, and counterproductive to EPA's own continuing efforts to assess the future direction and scope of the TMDL Program. Moreover, in light of the significant progress States have made in the past three years in establishing TMDLs under the currently effective rules, EPA does not foresee any harm to States' efforts to implement section 303(d) from withdrawal of the July 2000 rule pending completion of EPA's effort. Consequently, the Agency is proposing to withdraw the July 2000 rule.

E. Request for Comment

EPA invites and will consider comments received during the 30-day comment period that address the question of whether the Agency should withdraw the July 2000 rule. EPA is not requesting comments on the currently effective rule at 40 CFR part 130 or what, if any, changes the Agency should propose to the TMDL rules in effect at 40 CFR part 130. EPA's consideration of that issue is continuing and when or if EPA proposes changes to the currently-effective TMDL regulations, EPA will provide for public comment in a separate **Federal Register** notice. Should EPA ultimately decide to withdraw the July 2000 rule, the effect of such a withdrawal would be that the TMDL Program would continue to operate under the rules promulgated in 1985, as amended in 1992, at 40 CFR part 130. Similarly, the revisions to the NPDES regulations at 40 CFR parts 122–124 would not go into effect, but under section 301(b)(1)(C), NPDES permits would still be required to include limits as stringent as necessary to meet water quality standards, and under 40 CFR 122.44(d) permit limits would continue to be required to derive from and comply with water quality standards and be consistent with the assumptions and requirements of wasteload allocations in an approved TMDL.

II. Statutory and Executive Order Reviews

A. Executive Order 12866: Regulatory Planning and Review

Under Executive Order 12866 (58 FR 51735, (October 4, 1993)), EPA must determine whether the regulatory action is ''significant'' and therefore subject to Office of Management and Budget (OMB) review and the requirements of the Executive Order. The Order defines ''significant regulatory action'' as one that is likely to result in a rule that may:

(1) Have an annual effect on the economy of $100 million or more or adversely affect in a material way the economy, a sector of the economy, productivity, competition, jobs, the environment, public health or safety, or State, local, or Tribal governments or communities;

(2) Create a serious inconsistency or otherwise interfere with an action taken or planned by another agency;

(3) Materially alter the budgetary impact of entitlements, grants, user fees, or loan programs or the rights and obligations of recipients thereof; or

(4) Raise novel legal or policy issues arising out of legal mandates, the President's priorities, or the principles set forth in the Executive Order.

Pursuant to the terms of Executive Order 12866, it has been determined that this rule is a ''significant regulatory action.'' As such, this action was submitted to OMB for review. Changes made in response to OMB suggestions or recommendations will be documented in the public record.

B. Paperwork Reduction Act (PRA)

This action does not impose an information collection burden under the provisions of the Paperwork Reduction Act, 44 U.S.C. 3501 *et seq.*

Burden means the total time, effort, or financial resources expended by persons to generate, maintain, retain, or disclose or provide information to or for a Federal agency. This includes the time needed to review instructions; develop, acquire, install, and utilize technology and systems for the purposes of collecting, validating, and verifying information, processing and maintaining information, and disclosing and providing information; adjust the existing ways to comply with any previously applicable instructions and requirements; train personnel to be able to respond to a collection of information; search data sources; complete and review the collection of information; and transmit or otherwise disclose the information.

An Agency may not conduct or sponsor and a person is not required to respond to, a collection of information unless it displays a currently valid OMB control number. The OMB control numbers for EPA's regulations are listed in 40 CFR part 9 and 48 CFR chapter 15.

C. Regulatory Flexibility Act (RFA), as Amended by the Small Business Regulatory Enforcement Fairness Act of 1996 (SBREFA), 5 U.S.C. 601 et seq.

The RFA generally requires an agency to prepare a regulatory flexibility analysis of any rule subject to notice and comment rulemaking requirements under the Administrative Procedure Act or any other statute unless the agency certifies that the rule will not have a significant economic impact on a substantial number of small entities. Small entities include small businesses, small organizations, and small governmental jurisdictions. For purposes of assessing the impacts of today's rule on small entities, small entity is defined as: (1) A small business

based on SBA size standards; (2) a small governmental jurisdiction that is a government of a city, county, town, school district or special district with a population of less than 50,000; and (3) a small organization that is any not-for-profit enterprise which is independently owned and operated and is not dominant in its field. After considering the economic impacts of today's proposed rule on small entities, I certify that this action, which would withdraw the July 2000 rule that has not taken effect, will not have a significant economic impact on a substantial number of small entities. Like the July 2000 rule, this proposed rule will not impose any requirements on small entities. This action would withdraw the July 2000 rule, which has never taken effect.

D. Unfunded Mandates Reform Act (UMRA) of 1995

Title II of the Unfunded Mandates Reform Act of 1995 (UMRA), Public Law 104–4, establishes requirements for Federal agencies to assess the effects of their regulatory actions on State, tribal and local governments and the private sector. Under section 202 of the UMRA, EPA generally must prepare a written Statement, including a cost-benefit analysis, for proposed and final rules with ''Federal mandates'' that may result in expenditures to State, local, and tribal governments, in the aggregate, or to the private sector, of $100 million or more in any one year. Before promulgating an EPA rule for which a written statement is needed, section 205 of the UMRA generally requires EPA to identify and consider a reasonable number of regulatory alternatives and adopt the least costly, most cost-effective or least burdensome alternative that achieves the objectives of the rule. The provisions of section 205 do not apply when they are inconsistent with applicable law. Moreover, section 205 allows EPA to adopt an alternative other than the least costly, most cost-effective or least burdensome alternative if the Administrator publishes with the final rule an explanation why that alternative was not adopted. Before EPA establishes any regulatory requirements that may significantly or uniquely affect small governments, including tribal governments, it must have developed under section 203 of the UMRA a small government agency plan. The plan must provide for notifying potentially affected small governments, enabling officials of affected small governments to have meaningful and timely input in the development of EPA regulatory proposals with significant Federal intergovernmental mandates, and informing, educating, and advising small governments on compliance with the regulatory requirements.

Like the July 2000 rule, today's proposed rule, which would withdraw the July 2000 rule that has not taken effect, contains no Federal mandates (under the regulatory provisions of title II of the UMRA) for State, local, or tribal governments or the private sector. The proposed rule imposes no enforceable duty on any State, local or tribal government or the private sector. Thus, today's rule is not subject to the requirements of sections 202 and 205 of UMRA. For the same reason, EPA has also determined that this rule contains no regulatory requirements that might significantly or uniquely affect small governments. This action does not impose any requirement on any entity. There are no costs associated with this action. Therefore, today's rule is not subject to the requirements of section 203 of UMRA.

E. Executive Order 13132: Federalism

Executive Order 13132, entitled ''Federalism'' (64 FR 43255, August 10, 1999), requires EPA to develop an accountable process to ensure ''meaningful and timely input by State and local officials in the development of regulatory policies that have federalism implications.'' ''Policies that have federalism implications'' is defined in the Executive Order to include regulations that have ''substantial direct effects on the States, on the relationship between the national government and the States, or on the distribution of power and responsibilities among the various levels of government.''

This proposal does not have federalism implications. It will not have substantial direct effects on the States, on the relationship between the national government and the States, or on the distribution of power and responsibilities among the various levels of government as specified in executive Order 13132. It proposes to withdraw the July 2000 rule, which has never taken effect. Thus, Executive Order 13132 does not apply to this rule.

In the spirit of Executive Order 13132, and consistent with EPA policy to promote communications between EPA and State and local governments, EPA specifically solicits comment on this proposed rule from State and local officials.

F. Executive Order 13175: Consultation and Coordination With Indian Tribal Governments

Executive Order 13175, entitled ''Consultation and Coordination with Indian Tribal Governments'' (65 FR 67249, November 6, 2000), requires EPA to develop an accountable process to ensure ''meaningful and timely input by tribal officials in the development of regulatory policies that have tribal implications.'' ''Policies that have tribal implications'' is defined in the Executive Order to include regulations that have ''substantial direct effects on one or more Indian tribes, on the relationship between the Federal government and the Indian tribes, or on the distribution of power and responsibilities between the Federal government and Indian tribes.''

This proposed rule does not have tribal implications. It will not have substantial direct effects on tribal governments, on the relationship between the Federal government and Indian tribes, or on the distribution of power and responsibilities between the Federal government and Indian tribes, as specified in Executive Order 13175. It proposes to withdraw the July 2000 rule, which has never taken effect. Thus, Executive Order 13175 does not apply to this rule.

In the spirit of Executive Order 13175, and consistent with EPA policy to promote communications between EPA and tribal governments, EPA specifically solicits additional comment on this proposed rule from tribal officials.

G. Executive Order 13045: Protection of Children From Environmental Health Risks and Safety Risks

Executive Order 13045 (62 FR 19885, April 23, 1997) applies to any rule that: (1) Is determined to be ''economically significant'' as defined under Executive Order 12866, and (2) concerns an environmental health or safety risk that EPA has reason to believe may have a disproportionate effect on children. If the regulatory action meets both criteria, EPA must evaluate the environmental health or safety effects of the planned rule on children, and explain why the planned regulation is preferable to other potentially effective and reasonably feasible alternatives considered by EPA. This proposed rule is not subject to Executive Order 13045 because it is not economically significant as defined in Executive Order 12866.

H. Executive Order 13211: Energy Effects

This rule is not a ''significant energy action'' as defined in Executive Order 13211, ''Actions Concerning Regulations that Significantly Affect Energy Supply, Distribution, or Use'', (66 FR 28355; May 22, 2001) because it is not a likely to have a significant adverse effect on the supply, distribution, or use of

energy. This rule simply proposes to withdraw the July 2000 rule which has never taken effect. We have concluded that this rule is not likely to have any adverse energy effects.

I. National Technology Transfer and Advancement Act

Section 12(d) of the National Technology Transfer and Advancement Act of 1995 (''NTTAA''), Public Law 104–113, section 12(d) (15 U.S.C. 272 note) directs EPA to use voluntary consensus standards in its regulatory activities unless to do so would be inconsistent with applicable law or otherwise impractical. Voluntary consensus standards are technical standards (*e.g.,* materials specifications, test methods, sampling procedures, and business practices) that are developed or adopted by voluntary consensus standards bodies. The NTTAA directs EPA to provide Congress, through OMB, explanations when the Agency decides not to use available and applicable voluntary consensus standards.

This proposed rulemaking does not impose any technical standards. Therefore, EPA is not considering the use of any voluntary consensus standards.

List of Subjects

40 CFR Part 9

Reporting and recordkeeping requirements.

40 CFR Part 122

Environmental protection, Administrative practice and procedure, Confidential business information, Hazardous substances, Reporting and recordkeeping requirements, Water pollution control.

40 CFR Part 123

Environmental protection, Administrative practice and procedure, Confidential business information, Air pollution control, Hazardous waste, Indians-lands, Intergovernmental relations, Penalties, Reporting and recordkeeping requirements, Water pollution control.

40 CFR Part 124

Environmental protection, Administrative practice and procedure, Air pollution control, Hazardous waste, Indians-lands, Reporting and recordkeeping requirements, Water pollution control, Water supply.

40 CFR Part 130

Environmental protection, Grant programs—environmental protection, Indians—lands, Intergovernmental relations, Reporting and recordkeeping requirements, Water pollution control, Water supply.

Dated: December 20, 2002.

Christine T. Whitman,

Administrator.

Parts 9, 122, 123, 124 and 130—Withdrawal of July 2000 Amendments

For the reasons stated in the preamble, EPA proposes:

1. To withdraw the amendments to 40 CFR part 9, 122, 123, 124 and 130 published July 13, 2000 (65 FR 43586).

a. The authority citation for part 130 continues to read as follows:

Authority: 33 U.S.C. 1251 *et seq.*

* * * * *

[FR Doc. 02–32582 Filed 12–26–02; 8:45 am]

BILLING CODE 6560–50–U

ENVIRONMENTAL PROTECTION AGENCY

40 CFR Part 52

[NC102–200304(b); FRL–7425–1]

Approval and Promulgation of Implementation Plans North Carolina: Approval of Revisions to Miscellaneous Regulations Within the North Carolina State Implementation Plan

AGENCY: Environmental Protection Agency (EPA).

ACTION: Proposed rule.

SUMMARY: On August 7, 2002, the North Carolina Department of Environment and Natural Resources submitted revisions to the North Carolina State Implementation Plan (SIP). North Carolina is adopting rule 15A NCAC 2D .0542, Control of Particulate Emissions from Cotton Ginning Operations. In addition, North Carolina is amending rules 15A NCAC 2D .0504, Particulates from Wood Burning Indirect Heat Exchangers, .0927, Bulk Gasoline Terminals, .0932, Gasoline Truck Tanks and Vapor Collection Systems and 15A NCAC 2Q .0102, Activities Exempt From Permitting Requirements and .0104, Where to Obtain and File Permit Applications. In the Final Rules section of this **Federal Register**, the EPA is approving the State's SIP revision as a direct final rule without prior proposal because the Agency views this as a noncontroversial submittal and anticipates no adverse comments. A detailed rationale for the approval is set forth in the direct final rule. If no significant, material, and adverse comments are received in response to this rule, no further activity is contemplated. If EPA receives adverse comments, the direct final rule will be withdrawn and all public comments received will be addressed in a subsequent final rule based on this rule.

The EPA will not institute a second comment period on this document. Any parties interested in commenting on this document should do so at this time.

DATES: Written comments must be received on or before January 27, 2003.

ADDRESSES: All comments should be addressed to: Randy Terry at the EPA, Region 4 Air Planning Branch, 61 Forsyth Street, SW., Atlanta, Georgia 30303–8960.

Copies of the State submittal(s) are available at the following addresses for inspection during normal business hours:

Environmental Protection Agency, Region 4, Air Planning Branch, 61 Forsyth Street, SW., Atlanta, Georgia 30303–8960. Randy Terry, 404/562–9032.

North Carolina Department of Environment, Health, and Natural Resources, North Salisbury Street, Raleigh, North Carolina 27604.

FOR FURTHER INFORMATION CONTACT: Randy B. Terry at 404/562–9032.

SUPPLEMENTARY INFORMATION: For additional information see the direct final rule which is published in the Rules section of this **Federal Register**.

Dated: October 31, 2002.

A. Stanley Meiburg,

Acting Regional Administrator, Region 4.

[FR Doc. 02–32138 Filed 12–26–02; 8:45 am]

BILLING CODE 6560–50–P

ENVIRONMENTAL PROTECTION AGENCY

40 CFR Part 52

[NC 93; NC–101–200122b; FRL–7402–7]

Approval and Promulgation of Implementation Plans North Carolina: Approval of Revisions to the North Carolina State Implementation Plan: Transportation Conformity and Interagency Memorandum of Agreements

AGENCY: Environmental Protection Agency (EPA).

ACTION: Proposed rule.

SUMMARY: The EPA is proposing to approve a revision to the North Carolina State Implementation Plan (SIP) that contains the transportation conformity rule pursuant to the Clean Air Act as amended in 1990 (Act). The transportation conformity rule assures that projected emissions from transportation plans, improvement

programs and projects, in air quality nonattainment or maintenance areas stay within the motor vehicle emissions ceiling contained in the SIP. The transportation conformity SIP revision enables the State to implement and enforce the Federal transportation conformity requirements at the state level per regulations for Conformity to State or Federal Implementation Plans of Transportation Plans, Programs, and Projects Developed, Funded or Approved Under Title 23 U.S.C. of the Federal Transit Laws. This EPA approval action streamlines the conformity process to allow direct consultation among agencies at the local level.

In the Final Rules Section of this **Federal Register**, the EPA is approving the North Carolina SIP revision as a direct final rule without prior proposal because the Agency views this as a noncontroversial submittal and anticipates no adverse comments. A detailed rationale for the approval is set forth in the direct final rule. If no significant, material, and adverse comments are received in response to this rule, no further activity is contemplated. If EPA receives adverse comments, the direct final rule will be withdrawn and all public comments received will be addressed in a subsequent final rule based on this rule. The EPA will not institute a second comment period on this document. Any parties interested in commenting on this document should do so at this time.

DATES: Written comments must be received on or before January 27, 2003.

ADDRESSES: All comments should be addressed to: Kelly Sheckler at the EPA, Region 4 Air Planning Branch, 61 Forsyth Street, SW., Atlanta, Georgia 30303.

Copies of the State submittal(s) are available at the following addresses for inspection during normal business hours:

Environmental Protection Agency, Region 4, Air Planning Branch, 61 Forsyth Street, SW., Atlanta, Georgia 30303–8960. Kelly Sheckler, 404/562–9042.

North Carolina Department of Environment and Natural Resources, 512 North Salisbury Street, Raleigh, North Carolina 27604.

FOR FURTHER INFORMATION CONTACT: Kelly Sheckler at 404/562–9042, e-mail: *Sheckler.Kelly@epa.gov.*

SUPPLEMENTARY INFORMATION: For additional information see the direct final rule which is published in the Rules Section of this **Federal Register**.

Dated: October 21, 2002.

A. Stanley Meiburg,

Acting Regional Administrator, Region 4.

[FR Doc. 02–32548 Filed 12–26–02; 8:45 am]

BILLING CODE 6560–50–P

FEDERAL MARITIME COMMISSION

46 CFR Part 540

[Docket No. 02–15]

Passenger Vessel Financial Responsibility

AGENCY: Federal Maritime Commission.

ACTION: Notice of proposed rulemaking; extension of comment period.

SUMMARY: Upon consideration of several requests, the Commission has determined to extend the comment period in this matter.

DATES: Comments are now due on April 8, 2003.

ADDRESSES: Address all comments concerning this proposed rule to: Bryant L. VanBrakle, Secretary, Federal Maritime Commission, 800 North Capitol Street, NW., Room 1046, Washington, DC 20573–0001, E-mail: *secretary@fmc.gov*.

FOR FURTHER INFORMATION CONTACT:

Sandra L. Kusumoto, Director, Bureau of Consumer Complaints and Licensing; Federal Maritime Commission, 202–523–5787; E-mail *sandrak@fmc.gov.*

or

Ronald D. Murphy, Commission Dispute Resolution Specialist And Deputy Director, Bureau of Consumer Complaints and Licensing; (202) 523–5787; E-mail: *ronaldm@fmc.gov.*

or

David R. Miles, Acting General Counsel, (202) 523–5740; E-mail: *davidm@fmc.gov;* Federal Maritime Commission, 800 North Capitol Street, NW., Washington, DC 20573–0001.

SUPPLEMENTARY INFORMATION: The Commission by Notice of Proposed Rulemaking published October 31, 2002, 67 FR 66352, proposed amendments to its passenger vessel regulations at 46 CFR part 540 that would eliminate the current ceiling on required performance coverage; adjust the amount of coverage required by providing for consideration of the obligations of credit card issuers; provide for the use of Alternative Dispute Resolution (''ADR''), including the Commission's ADR program, in resolving passenger performance claims; revise the application form; and make a number of technical adjustments to the performance and casualty rules.

Royal Caribbean Cruises, Ltd.; Norwegian Cruise Line; the Travel Industry Association of America; the Florida Ports Council; Crystal Cruises; the Port of San Diego Unified Port District; Cruise the West and its Members; Congressmen Don Young, Chairman and James L. Oberstar, Ranking Democratic Member, of the Committee on Transportation and Infrastructure of the U.S. House of Representatives; and Disney Cruise Line are seeking an extension of time, up to 90 days beyond the current due date of January 8, 2003, to file comments. In support of this request, they argue, *inter alia,* that an extension would give the industry time to adequately evaluate the NPRM and to obtain the cost data the Commission encouraged commenters to submit. In anticipation of receiving cost and other data relevant to this NPRM, the Commission has determined to grant the parties request and is extending the comment period to April 8, 2003.

By the Commission.

Bryant L. VanBrakle,

Secretary.

[FR Doc. 02–32645 Filed 12–26–02; 8:45 am]

BILLING CODE 6730–01–P

Notices

Federal Register

Vol. 67, No. 249

Friday, December 27, 2002

This section of the FEDERAL REGISTER contains documents other than rules or proposed rules that are applicable to the public. Notices of hearings and investigations, committee meetings, agency decisions and rulings, delegations of authority, filing of petitions and applications and agency statements of organization and functions are examples of documents appearing in this section.

DEPARTMENT OF AGRICULTURE

Forest Service

John Day/Snake Resource Advisory Council, Hells Canyon Subgroup

AGENCY: Forest Service, USDA.

ACTION: Notice of meeting.

SUMMARY: The Hells Canyon subgroup of the John Day/Snake Resource Advisory Council will meet on January 30–31, 2003 at the Presbyterian Church on 4th and Washington, Baker City, OR 97814. The meeting will begin at 10 a.m. and continue until 5 p.m. the first day and day 2 will begin at 8 a.m. and will end at 2 p.m. Public comment will be heard on January 30, 2003 at 1 p.m.

FOR FURTHER INFORMATION CONTACT: Direct questions regarding this meeting to Kendall Clark, Area Ranger, USDA, Hells Canyon National Recreation area, 88401 Highway 82, Enterprise, OR 97828, 541–426–5501.

Dated: December 19, 2002.

Karyn L. Wood,

Forest Supervisor.

[FR Doc. 02–32672 Filed 12–26–02; 8:45 am]

BILLING CODE 3410–11–M

DEPARTMENT OF AGRICULTURE

Natural Resources Conservation Service

Information Collection; Paperwork Reduction Act of 1995

AGENCY: Natural Resources Conservation Service (NRCS).

ACTION: Notice to reinstate a previously approved information collection for review and comment.

SUMMARY: In accordance with the Paperwork Reduction Act of 1995, this notice announces the Natural Resources Conservation Service's intention to reinstate a previously approved information collection. The collected information will help the Natural Resources Conservation Service match the skills of individuals applying for volunteer work who will further the agency's mission. Information will be collected from potential volunteers who are 14 years of age or older.

EFFECTIVE DATES: Comments will be received for a 60-day period commencing with the date of this publication.

FOR FURTHER INFORMATION, CONTACT: Michele Eginoire, National Volunteer Coordinator; fax (515) 289–1227; telephone: (515) 289–0325, extension 29; e-mail: *eginoire@swcs.org.*

SUPPLEMENTARY INFORMATION: Collection of this information is necessary to document service of volunteers as required by FPM Supplement 296–33, Subchapter 3. Agencies are authorized to recruit, train, and accept, with regard to civil service classification laws, rules or regulations, the services of individuals to serve without compensation. Volunteers may assist in any agency program/project, and may perform any activities which agency employees are allowed to do. Volunteers must be at least 14 years of age.

Persons interested in volunteering will have to write, call, e-mail, or visit a Natural Resources Conservation Service Office. The forms will be available electronically, and can be completed electronically.

DESCRIPTION OF INFORMATION COLLECTION: The NRCS–PERS–002, Volunteer Interest and Placement Summary, is an optional form that assists the volunteer supervisor in placing the volunteer in a position that will benefit both the agency and the volunteer. The form is placed in a volunteer case file, and will be destroyed three years after the volunteer has completed service. In the event that the volunteer is injured, the case file will be transferred to the Official Personnel Folder.

Signed in Washington, DC, on December 18, 2002.

Bruce I. Knight,

Chief, Natural Resources Conservation Service.

[FR Doc. 02–32671 Filed 12–26–02; 8:45 am]

BILLING CODE 3410–16–P

DEPARTMENT OF AGRICULTURE

Rural Housing Service

Notice of Timeframe for Section 514 Farm Labor Housing Loans and Section 516 Farm Labor Housing Grants for Off-Farm Housing for Fiscal Year 2003

AGENCY: Rural Housing Service, USDA.

ACTION: Notice.

SUMMARY: This Notice announces the timeframe to submit applications for section 514 Farm Labor Housing loan funds and section 516 Farm Labor Housing grant funds for new construction and acquisition and rehabilitation of off-farm units for farmworker households.

Applications may also include requests for section 521 rental assistance (RA) and operating assistance for migrant units. This document describes the method used to distribute funds, the application process, and submission requirements. We are publishing this Notice prior to passage of a final appropriations act to give applicants the maximum amount of time possible to complete their applications, and to provide the Agency sufficient time to process the selected applications within the current fiscal year. Applications for Fiscal Year (FY) 2003 will only be accepted through the date and time listed in this notice. A Notice of Funding Availability (NOFA) announcing the level of funding for the program will be published upon passage of a final appropriations act in accordance with 42 U.S.C. 1490p and 7 CFR 1944.170. Because the Agency's appropriations act has not been passed, the Agency cannot make funding commitments. Expenses incurred in developing applications will be at the applicant's risk.

DATES: The closing deadline for receipt of all applications in response to this Notice is 5 p.m., local time for each Rural Development State Office on March 27, 2003. The application closing deadline is firm as to date and hour. RHS will not consider any application that is received after the closing deadline. Applicants intending to mail applications must provide sufficient time to permit delivery on or before the closing deadline date and time. Acceptance by a post office or private mailer does not constitute delivery.

Facsimile (FAX) and postage due applications will not be accepted.

ADDRESSES: Applicants wishing to apply for assistance must contact the Rural Development State Office serving the place in which they desire to locate off-farm labor housing to receive further information and copies of the application package. Rural Development will date and time stamp incoming applications to evidence timely receipt, and, upon request, will provide the applicant with a written acknowledgment of receipt. A listing of Rural Development State Offices, their addresses, telephone numbers, and person to contact follows:

Note: Telephone numbers listed are not toll-free.

Alabama State Office, Suite 601, Sterling Center, 4121 Carmichael Road, Montgomery, AL 36106–3683 (334) 279–3455, TDD (334) 279–3495, James B. Harris

Alaska State Office, 800 West Evergreen, Suite 201, Palmer, AK 99645, (907) 761–7740, TDD (1–907–786–7786 Deborah Davis

Arizona State Office, Phoenix Corporate Center, 3003 N. Central Ave., Suite 900, Phoenix, AZ 85012–2906, (602) 280–8706, TDD (602) 280–8770, Johnna Vargas

Arkansas State Office, 700 W. Capitol Ave., Rm. 3416, Little Rock, AR 72201–3225, (501) 301–3250, TDD (501) 301–3063, Clinton King

California State Office, 430 G Street, #4169, Davis, CA 95616–4169, (530) 792–5830, TDD (530) 792–5848, Jeff Deiss

Colorado State Office, 655 Parfet Street, Room E100, Lakewood, CO 80215, (720) 544–2923, TDD (720) 544–2976, Mary Summerfield

Connecticut: Served by Massachusetts State Office

Delaware & Maryland State Office, 4607 South Dupont Highway, PO Box 400, Camden, DE 19934–9998, (302) 697–4353, TDD (302) 697–4303, Pat Baker

Florida & Virgin Islands State Office, 4440 NW., 25th Place, Gainesville, FL 32606–6563, (352) 338–3465, TDD (352) 338–3499, Joseph P. Fritz

Georgia State Office, Stephens Federal Building, 355 E. Hancock Avenue, Athens, GA 30601–2768, (706) 546–2164, TDD (706) 546–2034, Wayne Rogers

Guam: Served by Hawaii State Office

Hawaii State Office, (Services all Hawaii, American Samoa and Western Pacific), Room 311, Federal Building, 154 Waianuenue Avenue, Hilo, HI 96720, (808) 933–8309, TDD (808) 933–8321, Thao Khamoui

Idaho State Office, Suite A1, 9173 West Barnes Dr., Boise, ID 83709, (208) 378–5628, TDD (208) 378–5644, LaDonn McElligott

Illinois State Office, 2118 W. Park Court. Suite A, Champaign, IL 61821–2986, (217) 403–6222, TDD (217) 403–6240, Barry L. Ramsey

Indiana State Office, 5975 Lakeside Boulevard, Indianapolis, IN 46278, (317) 290–3100 (ext. 423), TDD (317) 290–3343, John Young

Iowa State Office, 210 Walnut Street Room 873, Des Moines, IA 50309, (515) 284–4666, TDD (515) 284–4858, Julie Sleeper

Kansas State Office, 1303 SW First American Place, Suite 100, Topeka, KS 66604–4040, (785) 271–2721, TDD (785) 271–2767, Virginia M. Hammersmith

Kentucky State Office, 771 Corporate Drive, Suite 200, Lexington, KY 40503, (859) 224–7325, TDD (859) 224–7422, Paul Higgins

Louisiana State Office, 3727 Government Street, Alexandria, LA 71302, (318) 473–7962, TDD (318) 473–7655, Yvonne R. Emerson

Maine State Office, 967 Illinois Ave., Suite 4, PO Box 405, Bangor, ME 04402–0405, (207) 990–9110, TDD (207) 942–7331, Michael Grondin

Maryland: Served by Delaware State Office

Massachusetts, Connecticut, & Rhode Island State Office, 451 West Street, Amherst, MA 01002, (413) 253–4333, TDD (413) 253–4590, Donald Colburn

Michigan State Office, 3001 Coolidge Road, Suite 200, East Lansing, MI 48823, (517) 324–5192, TDD (517) 337–6795, Philip Wolak

Minnesota State Office, 375 Jackson Street Building, Suite 410, St. Paul, MN 55101, (651) 602–7804, TDD (651) 602–7830, Joyce Vondal

Mississippi State Office, Federal Building, Suite 831, 100 W. Capitol Street, Jackson, MS 39269, (601) 965–4325, TDD (601) 965–5850, Darnella Smith-Murray

Missouri State Office, 601 Business Loop 70 West, Parkade Center, Suite 235, Columbia, MO 65203, (573) 876–0990, TDD (573) 876–9480, Becky Eftink

Montana State Office, Unit 1, Suite B, 900 Technology Blvd., Bozeman, MT 59715, (406) 585–2552, TDD (406) 585–2562, Al Lazarewicz

Nebraska State Office, Federal Building, room 152, 100 Centennial Mall N, Lincoln, NE 68508, (402) 437–5594, TDD (402) 437–5093, Phil Willnerd

Nevada State Office, 1390 South Curry Street, Carson City, NV 89703–9910, (775) 887–1222 (ext. 25), TDD (775) 885–0633, Angilla Denton

New Hampshire State Office, Concord Center, Suite 218, Box 317, 10 Ferry Street, Concord, NH 03301–5004, (603) 223–6046, TDD (603) 229–0536, Jim Fowler

New Jersey State Office, Tarnsfield Plaza, Suite 22, 790 Woodland Road, Mt. Holly, NJ 08060, (856) 787–7740, TDD (856) 787–7784, George Hyatt, Jr.

New Mexico State Office, 6200 Jefferson St., NE., Room 255, Albuquerque, NM 87109, (505) 761–4944, TDD (505) 761–4938, Carmen N. Lopez

New York State Office, The Galleries of Syracuse, 441 S. Salina Street, Suite 357 5th Floor, Syracuse, NY 13202, (315) 477–6419, TDD (315) 477–6447, George N. Von Pless

North Carolina State Office, 4405 Bland Road, Suite 2120, Raleigh, NC 271209, (919) 873–2066, TDD (919) 873–2003, Terry Strole

North Dakota State Office, Federal Building, Room 208, 220 East Rosser, PO Box 1737, Bismarck, ND 58502, (701) 530–2049, TDD (701) 530–2113, Kathy Lake

Ohio State Office, Federal Building, Room 507, 200 North High Street, Columbus, OH 43215–2477, (614) 255–2418, TDD (614) 255–2554, Melodie Taylor-Ward

Oklahoma State Office, 100 USDA, Suite 108, Stillwater, OK 74074–2654, (405) 742–1070, TDD (405) 742–1007, Phil Reimers

Oregon State Office, 101 SW Main, Suite 1410, Portland, OR 97204–3222, (503) 414–3325, TDD (503) 414–3387, Margo Donelin

Pennsylvania State Office, One Credit Union Place, Suite 330, Harrisburg, PA 17110–2996, (717) 237–2281, TDD (717) 237–2261, Gary Rothrock

Puerto Rico State Office, New San Juan Office Bldg., Room 501, 159 Carlos E. Chardon Street, Hato Rey, PR 00918–5481, (787) 766–5095 (ext. 254), TDD 1–800–274–1572, Lourdes Colon

Rhode Island: Served by Massachusetts State Office

South Carolina State Office, Strom Thurmond Federal Building, 1835 Assembly Street, Room 1007, Columbia, SC 29201, (803) 253–3432, TDD (803) 765–5697, Larry D. Floyd

South Dakota State Office, Federal Building, Room 210, 200 Fourth Street, SW., Huron, SD 57350, (605) 352–1135, TDD (605) 352–1147, Roger Hazuka

Tennessee State Office, Suite 300, 3322 West End Avenue, Nashville, TN 37203–1084, (615) 783–1300, TDD (615) 783–1397, Larry Kennedy

Texas State Office, Federal Building, Suite 102, 101 South Main, Temple, TX 76501, (254) 742–9758, TDD (254) 742–9712, Julie Hayes

Utah State Office, Wallace F. Bennett Federal Building, 125 S. State Street, Room 4311, Salt Lake City, UT 84147–0350, (801) 524–4324, TDD (801) 524–3309, Robert L. Milianta

Vermont State Office, City Center, 3rd Floor, 89 Main Street, Montpelier, VT 05602, (802) 828–6028, TDD (802) 223–6365, Sandra Mercier

Virgin Islands: Served by Florida State Office

Virginia State Office, Culpeper Building, Suite 238, 1606 Santa Rosa Road, Richmond, VA 23229, (804) 287–1596, TDD (804) 287–1753, CJ Michels

Washington State Office, 1011 East Main St., Suite 306, Puyallup, WA 98372–6771, (253) 845–9272 X114, TDD (360) 704–7760, Robert Lund

Western Pacific Territories: Served by Hawaii State Office

West Virginia State Office, Federal Building, 75 High Street, Room 320, Morgantown, WV 26505–7500, (304) 284–4889, TDD (304) 284–4836, Craig St. Clair

Wisconsin State Office, 4949 Kirschling Court, Stevens Point, WI 54481, (715) 345–7620 (ext. 7145), TDD (715) 345–7614, Sherry Engel

Wyoming State Office, 100 East B, Federal Building, Room 1005, PO Box 820, Casper, WY 82602, (307) 261–6315, TDD (307) 261–6333, Jack Hyde

FOR FURTHER INFORMATION CONTACT: For general information, applicants may contact Mary Fox, Senior Loan Specialist or David Layfield, Senior Loan Specialist, of the Multi-Family Housing Processing Division, Rural Housing Service, United States Department of Agriculture, Stop 0781, 1400 Independence Avenue, SW., Washington, DC, 20250–0781, telephone (202) 720–1624 or (202) 690–0759 (voice) (this is not a toll free number) or (800) 877–8339 (TDD-Federal Information Relay Service).

SUPPLEMENTARY INFORMATION:

Programs Affected

The Farm Labor Housing Program is listed in the Catalog of Federal Domestic Assistance under Number 10.405, Farm Labor Housing Loans and Grants. Rental Assistance is listed in the Catalog under Number 10.427, Rural Rental Assistance Payments.

Definitions

Farm Labor. Farm labor includes services in connection with cultivating the soil, raising or harvesting any agriculture or aquaculture commodity; or in catching, netting, handling, planting, drying, packing, grading, storing, or preserving in its unmanufactured state any agriculture or aquaculture commodity; or delivering to storage, market, or a carrier for transportation to market or to process any agricultural or aquacultural commodity.

Migrant Agricultural Laborers. Agricultural laborers and family dependents who establish a temporary residence while performing agriculture work at one or more locations away from the place they call home or home base. (This does not include day-haul agricultural workers whose travels are limited to work areas within one day of their work locations.)

Off-Farm Labor Housing. Housing for farm laborers regardless of the farm where they work.

Operating Assistance. Assistance toward the cost of operating off-farm migrant farmworker projects financed under sections 514 or 516 of the Housing Act of 1949. Projects that receive operating assistance may not receive tenant-specific rental assistance (RA).

Discussion of Notice

I. Authority and Distribution Methodology

A. Authority

The Farm Labor Housing program is authorized by the Housing Act of 1949: Section 514 (42 U.S.C. 1484) for loans and section 516 (42 U.S.C. 1486) for grants. Tenant subsidies (rental assistance (RA)) and operating assistance for migrant projects are available through section 521 (42 U.S.C. 1490a). Sections 514 and 516 provide RHS the authority to make loans and grants for financing off-farm housing to broad-based nonprofit organizations, nonprofit organizations of farmworkers, federally recognized Indian tribes, agencies or political subdivisions of State or local government, public agencies (such as local housing authorities) and with section 514 loans to nonprofit limited partnerships in which the presence and extent of leveraged assistance, including donated land, for the units that will serve program-eligible general partner is a nonprofit entity.

B. Distribution Methodology

Because RHS has the ability to adjust loan and grant levels, final loan and grant levels will fluctuate. The actual funds available for fiscal year (FY) 2003 for off-farm housing will be published at a later date in a subsequent Notice.

C. Section 514 and Section 516 Funds

Section 514 loan funds and section 516 grant funds will be distributed to States based on a national competition, as follows:

1. States will accept, review, and score requests in accordance with 7 CFR part 1944, subpart D. The scoring factors are:

(a) tenants, calculated as a percentage of the RHS total development cost (TDC). RHS TDC excludes non-RHS eligible costs such as a developer's fee. Leveraged assistance includes, but is not limited to, funds for hard construction costs, section 8 or other non-RHS tenant subsidies, and state or federal funds. A minimum of ten percent leveraged assistance is required to earn points; however, if the total percentage of leveraged assistance is less than ten percent and the proposal includes donated land, two points will be awarded for the donated land. Points will be awarded in accordance with the following table. (0 to 20 points)

Percentage	Points
75 or more	20
60–74	18
50–59	16
40–49	12
30–39	10
20–29	8
10–19	5
0–9	0
Donated land in proposals with less than ten percent total leveraged assistance	2

(b) Seasonal, temporary, migrant housing. (5 points for up to and including 50 percent of the units; 10 points for 51 percent or more.)

(c) The selection criteria contained in 7 CFR 1944, subpart D includes one optional criteria set by the National Office. The National Office initiative will be used in the selection criteria as follows:

Up to 10 Points will be awarded based on the presence of and extent to which a tenant services plan exists that clearly outlines services that will be provided to the residents of the proposed project. These services may include but are not limited to: transportation related services, on-site English as a Second Language (ESL) classes, move-in funds, emergency assistance funds, homeownership counseling, food pantries, after school tutoring, and computer learning centers. Two points will be awarded for each resident service included in the tenant services plan up to a maximum of 10 points. Plans must detail how the services are to be administered, who will administer them, and where they will be administered. All tenant service plans must include letters of intent that clearly state the service that will be

provided at the project for the benefit of the residents from any party administering each service, including the applicant. (0 to 10 points)

2. States will conduct preliminary eligibility review, score applications, and forward to the National Office.

3. The National Office will rank all requests nationwide and distribute funds to States in rank order, within funding and RA limits. If insufficient funds or RA remain for the next ranked proposal, the Agency will select the next ranked proposal that falls within the remaining levels. In the event there are multiple preapplications in either category, one preapplication from each State (the highest State-ranked) will compete by computer-based random lottery. If necessary, the process will be completed until all same-pointed preapplications are selected or funds are exhausted.

II. Funding Limits

A. Individual requests may not exceed $3 million (total loan and grant).

B. No State may receive more than 30 percent of the total available funds unless an exception is granted from the Administrator.

C. Rental Assistance and Operating Assistance will be held in the National office for use with section 514 loans and section 516 grants and will be awarded based on each project's financial structure and need.

III. Application Process

All applications for sections 514 and 516 funds must be filed with the appropriate Rural Development State office and must meet the requirements of 7 CFR part 1944, subpart D, and section IV of this Notice. Incomplete applications will not be reviewed and will be returned to the applicant. No application will be accepted after 5 p.m., local time, on March 27, 2003 unless date and time is extended by another Notice published in the **Federal Register**.

IV. Application Submission Requirements

A. Each application shall include all of the information, materials, forms and exhibits required by 7 CFR part 1944, subpart D, as well as comply with the provisions of this Notice. Applicants are encouraged, but not required, to include a check list and to have their applications indexed and tabbed to facilitate the review process. The Rural Development State Office will base its determination of completeness of the application and the eligibility of each applicant on the information provided in the application.

B. Applicants are advised to contact the Rural Development State Office serving the place in which they desire to submit an application for application information.

Dated: December 20, 2002.

James E. Selmon, III,

Associate Administrator, Rural Housing Service.

[FR Doc. 02–32760 Filed 12–26–02; 8:45 am]

BILLING CODE 3410–XV–U

DEPARTMENT OF AGRICULTURE

Rural Housing Service

Notice of Timeframe To Submit Applications for the Section 515 Rural Rental Housing Program for Fiscal Year 2003

AGENCY: Rural Housing Service, USDA.

ACTION: Notice.

SUMMARY: This Notice announces the timeframe for submitting applications for the section 515 Rural Rental Housing Program for Fiscal Year (FY) 2003. We are publishing this Notice prior to passage of a final appropriations act to give applicants the maximum amount of time possible to complete their applications, to provide the Agency sufficient time to process the selected applications within the current fiscal year, and in order to comply with 7 CFR 1944.231. Because the Agency's appropriations act has not been passed, applicants are cautioned that the Agency cannot make commitments based on the anticipated funding. Expenses incurred in developing applications will be at the applicant's risk.

Additional Application Information

Applications may be submitted for section 515 Rural Rental Housing (RRH) new construction loan funds and section 521 Rental Assistance (RA). Section 515 funds include the nonprofit set-aside for eligible nonprofit entities and the set-aside for the most Underserved Counties and Colonias (Cranston-Gonzalez National Affordable Housing Act). Section VI of this Notice gives additional information regarding the set-asides.

DATES: The closing deadline for receipt of all applications, including those for the set-asides, in response to this Notice is 5 p.m., local time for each Rural Development State Office on February 25, 2003. The application deadline is firm as to date and hour. RHS will not consider any application that is received after the closing deadline. Applicants intending to mail applications must provide sufficient time to permit delivery on or before the closing deadline date and time. Acceptance by the United States Postal Service or private mailer does not constitute delivery. Facsimile (Fax) and postage due applications will not be accepted.

ADDRESSES: Applicants wishing to apply for assistance must contact the Rural Development State Office serving the place in which they desire to submit an application for rural rental housing to receive further information and copies of the application package. Rural Development will date and time stamp incoming applications to evidence timely receipt, and, upon request, will provide the applicant with a written acknowledgment of receipt. A listing of Rural Development State offices, their addresses, telephone numbers, and person to contact follows:

Note: Telephone numbers listed are not toll-free.

Alabama State Office, Suite 601, Sterling Centre, 4121 Carmichael Road, Montgomery, AL 36106–3683, (334) 279–3455, TDD (334) 279–3495, James B. Harris.

Alaska State Office, 800 West Evergreen, Suite 201, Palmer, AK 99645, (907) 761–7740, TDD (907) 761–8905, Deborah Davis.

Arizona State Office, Phoenix Corporate Center, 3003 N. Central Ave., Suite 900, Phoenix, AZ 85012–2906, (602) 280–8765, TDD (602) 280–8706, Johnna Vargas.

Arkansas State Office, 700 W. Capitol Ave., Room 3416, Little Rock, AR 72201–3225, (501) 301–3250, TDD (501) 301–3063, Cathy Jones.

California State Office, 430 G Street, #4169, Davis, CA 95616–4169, (530) 792–5830, TDD (530) 792–5848, Jeff Deiss.

Colorado State Office, 655 Parfet Street, Room E100, Lakewood, CO 80215, (720) 544–2922, TDD (720) 544–2976, ''Sam'' Mitchell.

Connecticut Served by Massachusetts State Office

Delaware and Maryland State Office, 4607 South Dupont Highway, P.O. Box 400, Camden, DE 19934–9998, (302) 697–4353, TDD (302) 697–4303, Pat Baker.

Florida & Virgin Islands State Office, 4440 N.W. 25th Place, Gainesville, FL 32606–6563, (352) 338–3465, TDD (352) 338–3499, Joseph P. Fritz.

Georgia State Office, Stephens Federal Building, 355 E. Hancock Avenue, Athens, GA 30601–2768, (706) 546–2164, TDD (706) 546–2034, Wayne Rogers.

Guam: Served by Hawaii State Office

Hawaii State Office, (Services all Hawaii, American Samoa and

Western Pacific), Room 311, Federal Building, 154 Waianuenue Avenue, Hilo, HI 96720, (808) 933–8309, TDD (808) 933–8321, Thao Khamoui.

Idaho State Office, Suite A1, 9173 West Barnes Dr., Boise, ID 83709, (208) 378–5630, TDD (208) 378–5644, LaDonn McElligott.

Illinois State Office, 2118 West Park Court, Suite A, Champaign, IL 61821–2986, (217) 403–6222, TDD (217) 403–6240, Barry L. Ramsey

Indiana State Office, 5975 Lakeside Boulevard, Indianapolis, IN 46278, (317) 290–3100 (ext. 423), TDD (317) 290–3343, John Young

Iowa State Office, 210 Walnut Street, Room 873, Des Moines, IA 50309, (515) 284–4666, TDD (515) 284–4858, Julie Sleeper

Kansas State Office, 1303 SW First American Place, Suite 100, Topeka, KS 66604–4040, (785) 271–2721, TDD (785) 271–2767, Virginia M. Hammersmith

Kentucky State Office, 771 Corporate Drive, Suite 200, Lexington, KY 40503, (859) 224–7325, TDD (859) 224–7422, Paul Higgins

Louisiana State Office, 3727 Government Street, Alexandria, LA 71302, (318) 473–7962, TDD (318) 473–7655, Yvonne R. Emerson

Maine State Office, 967 Illinois Ave., Suite 4, PO Box 405, Bangor, ME 04402–0405, (207) 990–9110, TDD (207) 942–7331, Dale D. Holmes

Maryland: Served by Delaware State Office

Massachusetts, Connecticut, & Rhode Island State Office, 451 West Street, Amherst, MA 01002, (413) 253–4333, TDD (413) 253–4590, Donald Colburn

Michigan State Office, 3001 Coolidge Road, Suite 200, East Lansing, MI 48823, (517) 324–5192, TDD (517) 337–6795, Philip Wolak

Minnesota State Office, 375 Jackson Street Building, Suite 410, St. Paul, MN 55101–1853, (651) 602–7804, TDD (651) 602–7830, Joyce Vondal

Mississippi State Office, Federal Building, Suite 831, 100 W. Capitol Street, Jackson, MS 39269, (601) 965–4325, TDD (601) 965–5850, Darnella Smith-Murray

Missouri State Office, 601 Business Loop 70 West, Parkade Center, Suite 235, Columbia, MO 65203, (573) 876–0990, TDD (573) 876–9480, Colleen James

Montana State Office, Unit 1, Suite B, 900 Technology Blvd., Bozeman, MT 59715, (406) 585–2551, TDD (406) 585–2562, Deborah Chorlton

Nebraska State Office, Federal Building, Room 152, 100 Centennial Mall N, Lincoln, NE 68508, (402) 437–5594, TDD (402) 437–5093, Phil Willnerd

Nevada State Office, 1390 South Curry Street, Carson City, NV 89703–9910, (775) 887–1222 (ext. 25), TDD (775) 885–0633, Angilla Denton

New Hampshire State Office, Concord Center, Suite 218, Box 317, 10 Ferry Street, Concord, NH 03301–5004, (603) 223–6046, TDD (603) 229–0536, Jim Fowler

New Jersey State Office, 5th Floor North, Suite 500, 8000 Midlantic Dr., Mt. Laurel, NJ 08054, (856) 787–7740, TDD (856) 787–7784, George Hyatt, Jr.

New Mexico State Office, 6200 Jefferson St., NE, Room 255, Albuquerque, NM 87109, (505) 761–4944, TDD (505) 761–4938, Carmen N. Lopez

New York State Office, The Galleries of Syracuse, 441 S. Salina Street, Suite 357 5th Floor, Syracuse, NY 13202, (315) 477–6419, TDD (315) 477–6447, George N. Von Pless

North Carolina State Office, 4405 Bland Road, Suite 260, Raleigh, NC 27609, (919) 873–2066, TDD (919) 873–2003, Terry Strole

North Dakota State Office, Federal Building, Room 208, 220 East Rosser, PO Box 1737, Bismarck, ND 58502, (701) 530–2049, TDD (701) 530–2113, Kathy Lake

Ohio State Office, Federal Building, Room 507, 200 North High Street, Columbus, OH 43215–2477, (614) 255–2418, TDD (614) 255–2554, Melodie Taylor-Ward

Oklahoma State Office, 100 USDA, Suite 108, Stillwater, OK 74074–2654, (405) 742–1070, TDD (405) 742–1007, Phillip F. Reimers

Oregon State Office, 101 SW Main, Suite 1410, Portland, OR 97204–3222, (503) 414–3325, TDD (503) 414–3387, Bill Daniel

Pennsylvania State Office, One Credit Union Place, Suite 330, Harrisburg, PA 17110–2996, (717) 237–2281, TDD (717) 237–2261, Gary Rothrock

Puerto Rico State Office, 654 Munoz Rivera Avenue, IBM Plaza, Suite 601, Hato Rey, PR 00918, (787) 766–5095 (ext. 249), TDD (787) 766–5332, Lourdes Colon

Rhode Island: Served by Massachusetts State Office

South Carolina State Office, Strom Thurmond Federal Building, 1835 Assembly Street, Room 1007, Columbia, SC 29201, (803) 253–3432, TDD (803) 765–5697, Larry D. Floyd

South Dakota State Office, Federal Building, Room 210, 200 Fourth Street, SW, Huron, SD 57350, (605) 352–1135, TDD (605) 352–1147, Roger Hazuka

Tennessee State Office, Suite 300, 3322 West End Avenue, Nashvile, TN 37203–1084, (615) 783–1375, TDD (615) 783–1397, G. Benson Lasater

Texas State Office, Federal Building, Suite 102, 101 South Main, Temple, TX 76501, (254) 742–9755, TDD (254) 742–9712, Eugene G. Pavlat

Utah State Office, Wallace F. Bennett Federal Building, 125 S. State Street, Room 4311, Salt Lake City, UT 84147–0350, (801) 524–4324, TDD (801) 524–3309, Robert L. Milianta

Vermont State Office, City Center, 3rd Floor, 89 Main Street, Montpelier, VT 05602, (802) 828–6028, TDD (802) 223–6365, Sandra Mercier

Virgin Islands: Served by Florida State Office

Virginia State Office, Culpeper Building, Suite 238, 1606 Santa Rosa Road, Richmond, VA 23229, (804) 287–1596, TDD (804) 287–1753, CJ Michels

Washington State Office, Puyallup Executive Park, 1011 E. Main, Suite 306, Puyallup, WA 98372–6771, (253) 845–9272 (ext. 5), TDD (253) 845–0553, Robert Lund

Western Pacific Territories: Served by Hawaii State Office

West Virginia State Office, Federal Building, 75 High Street, Room 320, Morgantown, WV 26505–7500, (304) 284–4889, TDD (304) 284–4836, Craig St. Clair

Wisconsin State Office, 4949 Kirschling Court, Stevens Point, WI 54481, (715) 345–7615 (ext. 151), TDD (715) 345–7614, Sherry Engel

Wyoming State Office, 100 East B, Federal Building, Room 1005, PO Box 820, Casper, WY 82602, (307) 261–6315, TDD (307) 261–6333, Jack Hyde

FOR FURTHER INFORMATION CONTACT: For general information, applicants may contact Linda Armour, Senior Loan Officer, Multi-Family Housing Processing Division, Rural Housing Service, United States Department of Agriculture, Stop 0781, 1400 Independence Avenue, SW., Washington, DC, 20250–0781, telephone (202) 720–1753 (voice) (this is not a toll free number) or (800) 877–8339 (TDD-Federal Information Relay Service).

SUPPLEMENTARY INFORMATION:

Programs Affected

The Rural Rental Housing program is listed in the Catalog of Federal Domestic Assistance under Number 10.415, Rural Rental Housing Loans. Rental Assistance is listed in the Catalog under Number 10.427, Rural Rental Assistance Payments.

Discussion of Notice

I. Authority and Distribution Methodology

A. Authority

Section 515 of the Housing Act of 1949 (42 U.S.C. 1485) provides RHS with the authority to make loans to any individual, corporation, association, trust, Indian tribe, public or private nonprofit organization, consumer cooperative, or partnership to provide rental or cooperative housing and related facilities in rural areas for very-low, low, or moderate income persons or families, including elderly persons and persons with disabilities. Rental assistance (RA) is a tenant subsidy for very-low and low-income families residing in rural rental housing facilities with RHS financing and may be requested with applications for such facilities.

B. Distribution Methodology

Nine percent of any appropriation will be set aside for eligible nonprofit entities and five percent will be set aside for the most Underserved Counties and Colonias (Cranston-Gonzalez National Affordable Housing Act). Additional information regarding distribution of funds will be provided when the appropriations act is passed.

C. Section 515 New Construction Funds

For fiscal year 2003, the Administrator has determined that it would not be practical to allocate funds to States because of funding limitations; therefore, section 515 new construction funds will be distributed to States based on a National competition, as follows:

1. States will accept, review, score, and rank requests in accordance with 7 CFR part 1944, subpart E. The scoring factors are:

(a) The presence and extent of leveraged assistance for the units that will serve RHS income-eligible tenants at basic rents comparable to those if RHS provided full financing, computed as a percentage of the RHS total development cost (TDC). RHS TDC excludes non-RHS eligible costs such as a developer's fee. The required applicant contribution is not considered leveraged assistance. Leveraged assistance includes loans and grants from other sources, contributions from the applicant above the required contribution indicated by the Sources and Uses Comprehensive Evaluation (available from the Rural Development State Office) and tax abatements or other savings in operating costs provided that, at the end of the abatement period when the benefit is no longer available, the basic rents are comparable to or lower than the basic rents if RHS provided full financing. Loan proposals that include secondary funds from other sources that have been requested but have not yet been committed will be processed as follows: The proposal will be scored based on the requested funds, provided (1) the applicant includes evidence of a filed application for the funds; and (2) the funding date of the requested funds will permit processing of the loan request in the current funding cycle, or, if the applicant does not receive the requested funds, will permit processing of the next highest ranked proposal in the current year. Points will be awarded in accordance with the following table. (0 to 20 points)

Percentage of leveraging	Points
75 or more	20
70–74	19
65–69	18
60–64	17
55–59	16
50–54	15
45–49	14
40–44	13
35–39	12
30–34	11
25–29	10
20–24	9
15–19	8
10–14	7
5–9	6
0–4	0

(b) The units to be developed are in a colonia, tribal land, EZ, EC, or Rural Economic Area Partnership (REAP) community, or in a place identified in the State Consolidated Plan or State Needs Assessment as a high need community for multifamily housing. (20 points)

(c) In states where RHS has an on-going formal working relationship, agreement, or Memorandum of Understanding (MOU) with the State to provide State resources (State funds, State RA, HOME funds, CDBG funds, or Low-Income Housing Tax Credits) for RHS proposals; or where the State provides preference or points to RHS proposals in awarding such State resources, 20 points will be provided to loan requests that include such State resources in an amount equal to at least 5 percent of the total development cost. Native American Housing and Self Determination Act (NAHASDA) funds may be considered a State Resource if the Tribal Plan for NAHASDA funds contains provisions for partnering with RHS for multifamily housing. (National office initiative)

(d) The loan request includes donated land meeting the provisions of 7 CFR 1944.215(r)(4). (5 points)

2. The National office will rank all requests nationwide and distribute funds from any FY 2003 appropriations to States in rank order, within funding and RA limits. If insufficient funds or RA remain for the next ranked proposal, the Agency will select the next ranked proposal that falls within the remaining levels. Point score ties will be handled as follows: The highest ranked same-pointed proposal from each State will be selected, followed by the second highest ranked proposal, and so on, until funds are exhausted.

D. Applications That Do Not Require New Construction Rental Assistance (RA)

The Agency is inviting applications to develop units in markets that do not require RA. The market study for non-RA proposals must clearly demonstrate a need and demand for the units by prospective tenants at income levels that can support the proposed rents without tenant subsidies. The proposed units must offer amenities that are typical for the market area at rents that are comparable to conventional rents in the market for similar units.

E. Set-asides

Loan requests will be accepted for the following set-asides:

1. Nonprofit set-aside. Nine percent of any appropriation act funding for the Section 515 program will be set aside for nonprofit applicants. All loan proposals must be in designated places in accordance with 7 CFR part 1944, subpart E. A State or jurisdiction may receive one proposal from this set-aside, which cannot exceed $1 million. A State could get additional funds from this set-aside if any funds remain after funding one proposal from each participating State. If there are insufficient funds to fund one loan request from each participating State, selection will be made by point score. If there are any funds remaining, they will revert to the National office reserve. Funds from this set-aside will be available only to nonprofit entities, which may include a partnership that has as its general partner a nonprofit entity or the nonprofit entity's for-profit subsidiary which will be receiving low-income housing tax credits authorized under section 42 of the Internal Revenue Code of 1986. To be eligible for this set-aside, the nonprofit entity must be an organization that:

(a) Will own an interest in the project to be financed and will materially participate in the development and the operations of the project;

(b) Is a private organization that has nonprofit, tax exempt status under

section 501(c)(3) or section 501(c)(4) of the Internal Revenue Code of 1986;

(c) Has among its purposes the planning, development, or management of low-income housing or community development projects; and

(d) Is not affiliated with or controlled by a for-profit organization. [As a point of clarification, the partnership may have only one general partner, which must meet the above requirements. A partnership with more than one general partner is not eligible for this set-aside.]

2. Underserved counties and colonias set-aside. Five percent of any appropriation act funding for the Section 515 program will be set aside for the 100 most needy underserved counties or colonias as defined in section 509(f) of the Housing Act of 1949.

II. Funding Limits

A. Individual loan requests may not exceed $1 million. This applies to regular section 515 funds and set-aside funds. The Administrator may make an exception to this limit in cases where a State's average total development costs exceed the National average by 50 percent or more.

B. States may receive a maximum combined total of $2.5 million from regular Section 515 funds and set-aside funds.

III. Rental Assistance (RA)

RA will be held in the National office for use with section 515 Rural Rental Housing loans. RA may be requested by applicants, except for non-RA requests in accordance with section I.D. above.

IV. Application Process

All applications for section 515 new construction funds must be filed with the appropriate Rural Development State Office and must meet the requirements of 7 CFR part 1944, subpart E and section V of this Notice. Incomplete applications will not be reviewed and will be returned to the applicant. No application will be accepted after 5 p.m., local time, on the application deadline previously mentioned unless that date and time is extended by a Notice published in the **Federal Register**.

V. Application Submission Requirements

A. Each application shall include all of the information, materials, forms and exhibits required by 7 CFR part 1944, subpart E as well as comply with the provisions of this Notice. Applicants are encouraged, but not required, to include a checklist and to have their applications indexed and tabbed to facilitate the review process. The Rural Development State Office will base its determination of completeness of the application and the eligibility of each applicant on the information provided in the application.

B. Applicants are advised to contact the Rural Development State office serving the place in which they desire to submit an application for the following:

1. Application information; and

2. List of designated places for which applications for new section 515 facilities may be submitted.

VI. Areas of Special Emphasis or Consideration

The selection criteria contained in 7 CFR part 1944, subpart E include two optional criteria, one set by the National Office and one by the State Office. This fiscal year, the National Office initiative will be used in the selection criteria as follows: In states where RHS has an on-going formal working relationship, agreement, or Memorandum of Understanding (MOU) with the State to provide State resources (State funds, State RA, HOME funds, CDBG funds, or Low Income Housing Tax Credits (LIHTC)) for RHS proposals; or where the State provides preference or points to RHS proposals in awarding these State Resources, 20 points will be provided to loan requests that include such State resources in an amount equal to at least 5 percent of the total development cost. Native American Housing and Self Determination Act (NAHASDA) funds may be considered a State Resource if the Tribal Plan for NAHASDA funds contains provisions for partnering with RHS for multifamily housing. No State selection criteria will be used this fiscal year.

Dated: December 20, 2002.

James E. Selmon,

Associate Administrator, Rural Housing Service.

[FR Doc. 02–32759 Filed 12–26–02; 8:45 am]

BILLING CODE 3410–XV–P

DEPARTMENT OF AGRICULTURE

Rural Housing Service

Notice of Timeframe for Section 533 Housing Preservation Grants for Fiscal Year 2003

AGENCY: Rural Housing Service, USDA.

ACTION: Notice.

SUMMARY: The Rural Housing Service (RHS) announces that it is soliciting competitive applications under its Housing Preservation Grant (HPG) program. We are publishing this Notice prior to passage of a final appropriations act to give applicants the maximum amount of time possible to complete their applications, and to provide the Agency sufficient time to select and process the selected applications within the current fiscal year. Although a Notice of Funding Availability (NOFA) outlining the level of funding for the program will be published after enactment of a final appropriation act, no additional time for submitting applications will be included in this notice. Applications must be submitted within the timeframe set forth below. Because the Agency's appropriations act has not been passed, applicants are cautioned that the Agency cannot make commitments based on the anticipated funding. Expenses incurred in developing applications will be at the applicant's risk.

The HPG program is a grant program which provides qualified public agencies, private nonprofit organizations, and other eligible entities grant funds to assist very low- and low-income homeowners repair and rehabilitate their homes in rural areas, and to assist rental property owners and cooperative housing complexes to repair and rehabilitate their units if they agree to make such units available to low- and very low-income persons. This action is taken to comply with Agency regulations found in 7 CFR part 1944, subpart N, which require the Agency to announce the opening and closing dates for receipt of preapplications for HPG funds from eligible applicants. The intended effect of this Notice is to provide eligible organizations notice of these dates.

Discussion of Anticipated Funding for Fiscal Year (FY) 2003

The FY 2002 funding level for the section 533 program was $7,982,000. To the extent an appropriation act provides funding for HPG grants in FY 2003, the actual funds available for FY 2003 will be published at a later date in a subsequent Notice.

DATES: The closing deadline for receipt of all applications in response to this Notice is 5 p.m., local time for each Rural Development State Office on March 27, 2003. The application closing deadline is firm as to date and hour. RHS will not consider any application that is received after the closing deadline. Applicants intending to mail applications must provide sufficient time to permit delivery on or before the closing deadline date and time. Acceptance by the United States Postal Service or private mailer does not

constitute delivery. Facsimile (FAX) and postage due applications will not be accepted.

ADDRESSES: Applicants wishing to apply for assistance must contact the Rural Development State Office serving the place in which they desire to submit an application to receive further information and copies of the application package. Rural Development will date and time stamp incoming applications to evidence timely receipt, and, upon request, will provide the applicant with a written acknowledgment of receipt. A listing of Rural Development State Offices, their addresses, telephone numbers, and person to contact follows:

Note: Telephone numbers listed are not toll-free.

Alabama State Office, Suite 601, Sterling Centre, 4121 Carmichael Road , Montgomery, AL 36106–3683, (334) 279–3400, TDD (334) 279–3495, Van McCloud

Alaska State Office 800 West Evergreen, Suite 201, Palmer, AK 99645, 907) 761–7740, TDD (907) 761–8905, Deborah Davis

Arizona State Office, Phoenix Corporate Center, 3003 N. Central Ave., Suite 900, Phoenix, AZ 85012–2906, (602) 280–8765, TDD (602) 280–8706, Johnna Vargas

Arkansas State Office, 700 W. Capitol Ave., Rm. 3416, Little Rock, AR 72201–3225, (501) 301–3258, TDD (501) 301–3063, Clinton King

California State Office, 430 G Street, #4169, Davis, CA 95616–4169, (530) 792–5819–5830, TDD (530) 792–5848, Jeff Deiss

Colorado State Office, 655 Parfet Street, Room E100, Lakewood, CO 80215, (720) 544–2922, TDD (720) 544–2976, ''Sam'' Mitchell

Connecticut: Served by Massachusetts State Office

Delaware and Maryland State Office, 4607 South Dupont Highway, P.O. Box 400, Camden, DE 19934–9998, (302) 697–4353, TDD (302) 697–4303, Pat Baker

Florida & Virgin Islands State Office, 4440 N.W. 25th Place, Gainesville, FL 32606–6563, (352) 338–3465, TDD (352) 338–3499, Joseph P. Fritz

Georgia State Office, Stephens Federal Building, 355 E. Hancock Avenue, Athens, GA 30601–2768, (706) 546–2164, TDD (706) 546–2034, Wayne Rogers

Guam: Served by Hawaii State Office

Hawaii State Office (Services all Hawaii, American Samoa and Western Pacific), Room 311, Federal Building, 154 Waianuenue Avenue, Hilo, HI 96720, (808) 933–8309, TDD (808) 933–8321, Thao Khamoui

Idaho State Office, Suite A1, 9173 West Barnes Dr., Boise, ID 83709, (208) 378–5630, TDD (208) 378–5644, LaDonn McElligott

Illinois State Office, 2118 West Park Court, Suite A, Champaign, IL 61821–2986, (217) 403–6222, TDD (217) 403–6240, Barry L. Ramsey

Indiana State Office, 5975 Lakeside Boulevard, Indianapolis, IN 46278, (317) 290–3100 (ext. 423), TDD (317) 290–3343, John Young

Iowa State Office, 210 Walnut Street, Room 873, Des Moines, IA 50309, (515) 284–4493, TDD (515) 284–4858, Julie Sleeper

Kansas State Office, 1303 SW First American Place, Suite 100, Topeka, KS 66604–4040, (785) 271–2721, TDD (785) 271–2767, Virginia M. Hammersmith

Kentucky State Office, 771 Corporate Drive, Suite 200, Lexington, KY 40503, (859) 224–7325, TDD (859) 224–7422, Beth Moore

Louisiana State Office, 3727 Government Street, Alexandria, LA 71302, (318) 473–7962, TDD (318) 473–7655, Yvonne R. Emerson

Maine State Office, 967 Illinois Ave., Suite 4, PO Box 405, Bangor, ME 04402–0405, (207) 990–9110, TDD (207) 942–7331, Lorrie Hamlin

Maryland: Served by Delaware State Office

Massachusetts, Connecticut, & Rhode Island State Office, 451 West Street, Suite 2 , Amherst, MA 01002, (413) 253–4333, TDD (413) 253–4590, Donald Colburn

Michigan State Office, 3001 Coolidge Road, Suite 200, East Lansing, MI 48823, (517) 324–5192, TDD (517) 337–6795, Philip Wolak

Minnesota State Office, 375 Jackson Street Building, Suite 410, St. Paul, MN 55101, (651) 602–7804, TDD (651) 602–7830, Joyce Vondal

Mississippi State Office, Federal Building, Suite 831, 100 W. Capitol Street, Jackson, MS 39269, (601) 965–4325, TDD (601) 965–5850, Darnella Smith-Murray

Missouri State Office, 601 Business Loop 70 West, Parkade Center, Suite 235, Columbia, MO 65203, (573) 876–0990, TDD (573) 876–9480, Colleen James

Montana State Office, Unit 1, Suite B, 900 Technology Blvd., Bozeman, MT 59715, (406) 585–2551 , TDD (406) 585–2562, Deborah Chorlton

Nebraska State Office, Federal Building, Room 152, 100 Centennial Mall N, Lincoln, NE 68508, (402) 437–5035, TDD (402) 437–5093, Sharon Kluck

Nevada State Office, 1390 South Curry Street, Carson City, NV 89703–9910, (775) 887–1222 (ext. 25), TDD (775) 885–0633, Angilla Denton

New Hampshire State Office, Concord Center, Suite 218, Box 317, 10 Ferry Street, Concord, NH 03301–5004, (603) 223–6046, TDD (603) 229–0536, Jim Fowler

New Jersey State Office, 5th Floor North, Suite 500, 8000 Midlantic Drive, Mt. Laurel, NJ 08054, (856) 787–7740, TDD (856) 787–7784, George Hyatt, Jr.

New Mexico State Office, 6200 Jefferson St., NE, Room 255, Albuquerque, NM 87109, (505) 761–4944, TDD (505) 761–4938, Carmen N. Lopez

New York State Office, The Galleries of Syracuse, 441 S. Salina Street, Suite 357 5th Floor, Syracuse, NY 13202, (315) 477–6419, TDD (315) 477–6447, Tia Baker

North Carolina State Office, 4405 Bland Road, Suite 260, Raleigh, NC 27609, (919) 873–2066, TDD (919) 873–2003, William A. Hobbs

North Dakota State Office, Federal Building, Room 208, 220 East Rosser, PO Box 1737, Bismarck, ND 58502, (701) 530–2049, TDD (701) 530–2113, Barry Borstad

Ohio State Office, Federal Building, Room 507, 200 North High Street, Columbus, OH 43215–2477, (614) 255–2418, TDD (614) 255–2554, Melodie Taylor-Ward

Oklahoma State Office, 100 USDA, Suite 108, Stillwater, OK 74074–2654, (405) 742–1070, TDD (405) 742–1007, Ivan Graves

Oregon State Office, 101 SW Main, Suite 1410, Portland, OR 97204–3222, (503) 414–3325, TDD (503) 414–3387, Bill Daniel

Pennsylvania State Office, One Credit Union Place, Suite 330, Harrisburg, PA 17110–2996, (717) 237–2281, TDD (717) 237–2261, Gary Rothrock

Puerto Rico State Office, 654 Munoz Rivera Avenue, IBM Plaza, Suite 601, Hato Rey, PR 00918, (787) 766–5095 (ext. 249), TDD (787) 766–5332, Lourdes Colon

Rhode Island: Served by Massachusetts State Office

South Carolina State Office, Strom Thurmond Federal Building, 1835 Assembly Street, Room 1007, Columbia, SC 29201, (803) 253–3432, TDD (803) 765–5697, Larry D. Floyd

South Dakota State Office, Federal Building, Room 210, 200 Fourth Street, SW., Huron, SD 57350, (605) 352–1135, TDD (605) 352–1147, Jim Hafner

Tennessee State Office, Suite 300, 3322 West End Avenue, Nashville, TN 37203–1084, (615) 783–1375, TDD (615) 783–1397, Larry Kennedy

Texas State Office, Federal Building, Suite 102, 101 South Main, Temple,

TX 76501, (254) 742–9758, TDD (254) 742–9712, Julie Hayes

Utah State Office, Wallace F. Bennett Federal Building, 125 S. State Street, Room 4311, Salt Lake City, UT 84138, (801) 524–4324, TDD (801) 524–3309, Robert L. Milianta

Vermont State Office, City Center, 3rd Floor, 89 Main Street, Montpelier, VT 05602, (802) 828–6028, TDD (802) 223–6365, Sandra Mercier

Virgin Islands: Served by Florida State Office

Virginia State Office, Culpeper Building, Suite 238, 1606 Santa Rosa Road, Richmond, VA 23229, (804) 287–1596, TDD (804) 287–1753, CJ Michels

Washington State Office, Puyallup Executive Park, 1011 E. Main, Suite 306, Puyallup, WA 98372–6771, (253) 845–9272 (ext. 118), TDD (360) 704–7760, Don Wagnoner

Western Pacific Territories: Served by Hawaii State Office

West Virginia State Office, Federal Building, 75 High Street, Room 320, Morgantown, WV 26505–7500, (304) 284–4889, TDD (304) 284–4836, Craig St. Clair

Wisconsin State Office, 4949 Kirschling Court, Stevens Point, WI 54481, (715) 345–7615 (ext. 151), TDD (715) 345–7614, Sherry Engel

Wyoming State Office, 100 East B, Federal Building, Room 1005, PO Box 820, Casper, WY 82602, (307) 261–6315, TDD (307) 261–6333, Jack Hyde

FOR FURTHER INFORMATION CONTACT: For general information, applicants may contact Mary Fox, Senior Loan Officer, Multi-Family Housing Processing Division, Rural Housing Service, United States Department of Agriculture, Stop 0781, 1400 Independence Avenue, SW., Washington, DC, 20250–0781, telephone (202) 720–1624 (voice) (this is not a toll free number) or (800) 877–8339 (TDD-Federal Information Relay Service).

SUPPLEMENTARY INFORMATION:

Programs Affected

This program is listed in the Catalog of Federal Domestic Assistance under Number 10.433, Rural Housing Preservation Grants. This program is subject to the provisions of Executive Order 12372 which requires intergovernmental consultation with State and local officials (7 CFR 3015, subpart V). Applicants are referred to 7 CFR 1944.674 and 1944.676(f) and (g) for specific guidance on these requirements relative to the HPG program.

Application Requirements

7 CFR part 1944, subpart N provides details on what information must be contained in the preapplication package. Entities wishing to apply for assistance should contact the Rural Development State Office to receive further information, the State allocation of funds if and when a final appropriation act is enacted providing funding for the HPG Program, and copies of the preapplication package. Eligible entities for these competitively awarded grants include state and local governments, nonprofit corporations, Federally recognized Indian Tribes, and consortia of eligible entities.

Funding Information

The funding instrument for the HPG Program will be a grant agreement. The term of the grant can vary from 1 to 2 years, depending on available funds and demand. No maximum or minimum grant levels have been established at the National level. If and when a final appropriation act is enacted providing funding for the HPG Program, you should contact the Rural Development State Office to determine the allocation and the State maximum grant level, if any. From funds available for the HPG Program, there will be monies set aside for grants located in Empowerment Zones, Enterprise Communities, and Rural Economic Area Partnership Zones and other funds will be distributed under a formula allocation to States pursuant to 7 CFR part 1940, subpart L.

Dated: December 20, 2002.

James E. Selmon,

Associate Administrator, Rural Housing Service.

[FR Doc. 02–32761 Filed 12–26–02; 8:45 am]

BILLING CODE 3410–XV–P

DEPARTMENT OF AGRICULTURE

Rural Housing Service

Notice for Requests for Proposals for Guaranteed Loans Under the Section 538 Guaranteed Rural Rental Housing Program (GRRHP) for Fiscal Year 2003

AGENCY: Rural Housing Service, USDA.

ACTION: Notice.

SUMMARY: This is a request for proposals for guaranteed loans under the section 538 Guaranteed Rural Rental Housing Program (GRRHP) pursuant to 7 CFR 3565.4 for Fiscal Year (FY) 2003 subject to the availability of funding. FY 2002 funding for the section 538 was $99.7 million. This notice is being issued prior to passage of a final appropriations bill to allow applicants sufficient time to leverage financing and submit proposals in the form of ''RESPONSES'', and give the Agency maximum time to process applications within the current fiscal year. A Notice of Funding Availability will be published announcing the funding level for GRRHP for FY 2003 once an appropriation act has been enacted. The commitment of program dollars will be made to applicants of selected responses that have fulfilled the necessary requirements for obligation, to the extent an appropriation act provides funding for GRRHP for FY 2003. Expenses incurred in developing applications will be at the applicant's risk. The following paragraphs outline the timeframes, eligibility requirements, lender responsibilities, and the overall response and application processes.

The GRRHP operates under 7 CFR part 3565. The GRRHP Origination and Servicing Handbook (HB–1–3565) is available to provide lenders and the general public with guidance on program administration. HB–1–3565, which contains a copy of Appendix 1, can be found at the Rural Development regulation web site address *http://rdinit.usda.gov/regs.*

Eligible lenders are invited to submit responses for the development of affordable rental housing to serve rural America. The Rural Housing Service (RHS) will review responses submitted by eligible lenders, on the lender's letterhead, and signed by both the prospective borrower and lender. Although a complete application is not required in response to this notice, eligible lenders may submit a complete application concurrently with the response. The submission of a complete application will not affect the scoring process.

DATES: Program dollars will be allocated through a continuous selection process to the extent and when an appropriation act provides funding for GRRHP for FY 2003. The RHS will review all responses through May 16, 2003. Reviews will take place on an on-going basis. Those responses that are selected that subsequently fulfill the necessary requirements for obligation and meet all federal environmental requirements will receive commitments to the extent an appropriation act provides funding for GRRHP for FY 2003 until all funds are expended. If any fiscal year 2003 funds have not been exhausted by May 16, 2003, the Agency will continue receiving and reviewing responses until all funds are expended. A notice will be placed in the **Federal Register** when all funds are committed for FY 2003.

Eligible lenders intending to mail a response or application must provide sufficient time to permit delivery to the NOTICE submission address on or

before the closing deadline date and time. Acceptance by a U.S. Post Office or private mailer does not constitute delivery. Postage due responses and applications will not be accepted.

FOR FURTHER INFORMATION CONTACT: Arlene Nunes, Senior Loan Specialist, Guaranteed Loans, Multi-Family Housing Processing Division, U.S. Department of Agriculture, South Agriculture Building, Room 1271, STOP 0781, 1400 Independence Avenue, SW, Washington, DC 20250–0781. E-mail: *anunes@rdmail.rural.usda.gov.* Telephone: (202) 401–2307. This number is not toll-free. Hearing or speech-impaired persons may access that number by calling the Federal Information Relay Service toll-free at (800) 877–8339.

Eligiblity of Prior Year Selected NOFA Responses: NOFA RESPONSES selected, but not funded, in prior years are eligible for FY 2003 program dollars subject to the availability of funds. Prior year NOFA RESPONSES selected by RHS for submission of a complete application may submit an application for competition for FY 2003 funding without completing a FY 2003 response. All qualified applications will be funded on a first come basis until all program funds are exhausted. RHS will commit and obligate funds only to lenders that meet the requirements for obligation, which include all federal environmental documents required by 7 CFR 1940, subpart G, Form RD 3565–1, and the $2,500 application fee.

General Program Information

Program Purpose: The section 538 Guaranteed Rural Rental Housing Program is designed to increase the supply of affordable multi-family housing through partnerships between the RHS and major lending sources, as well as state and local housing finance agencies and bond issuers.

Required Responses From: Eligible Lenders for Multi-Family Lending.

Program Offers: Loan Guarantees and Interest Credits for Rural Housing.

Qualifying Properties: Qualifying properties include new construction for multi-family housing units or acquisition of existing structures with rehabilitation of at least $15,000 per unit.

Eligible Financing Sources: Any form of federal, state, and conventional sources of financing can be used in conjunction with the loan guarantee, including Home Investment Partnership Program (HOME) grant funds, tax exempt bonds, and low income housing tax credits.

Maximum Guarantee: The maximum guarantee for a permanent loan will be 90 percent of the unpaid balance and interest on the loan. The maximum guarantee on a construction loan will be 90 percent of the work in place, which have credit enhancements, or up to 90 percent of the amount actually advanced by the lender, whichever is less.

Reimbursement of Losses: Any losses will be split on a pro-rata basis between the lender and the RHS from the first dollar lost.

Interest Rate: RHS will accept the best rate negotiated between the lender and prospective borrower. Interest rates must be fixed over the term of the loan.

Interest Credit: RHS will award interest credit to at least 20 percent of the loans made under the program. If 20 percent of the loans have not received interest credit by May 16, 2003, then RHS will award interest credit to those loans that initially requested interest credit and have the highest interest credit priority score until at least 20% of the loans have received interest credit. Requests for interest credit must be made in the response. Lenders are not permitted to make requests for interest credit after the selection process has taken place.

Due to limited funding and in order to distribute Interest Credit assistance as broadly as possible, the Agency has decided to limit the interest credit to $1.5 million per loan. For example, if an eligible request were made for interest credit on a loan of $2.5 million, up to $1.5 million of the loan would receive interest credit. Interest credit is not available for construction loans. Interest credit is only available for permanent loans. Lenders with projects that are viable with or without interest credit are encouraged to submit a response reflecting financial and market feasibility under both funding options. Responses requesting consideration under both options will not affect interest credit selection. However, once the interest credit funds are exhausted, only those responses requesting consideration under both funding options or the Non-Interest Credit option will be further considered.

Due to limited interest credit funds and the responsibility of RHS to target and give priority to rural areas most in need, responses requesting interest credit must score a minimum of 55 points under the criteria established in this notice. In the event of ties, selection between responses will be by lot.

Surcharges for Guarantee of Construction Advances: There is no surcharge for the guarantee of construction advances for FY 2003.

Program Fees for FY 2003: The following information stipulates the program fees.

(1) There is an initial guarantee fee of 1 percent of the total guarantee amount, which will be due when the loan guarantee is issued. In the case of a combination construction and permanent loan guarantee, the 1 percent initial fee will be paid when the construction loan note guarantee is issued. For purposes of calculating this fee, the guarantee amount is the product of the percentage of the guarantee times the initial principal amount of the guaranteed loan.

(2) There is an annual renewal fee of 0.5 percent of the outstanding principal and interest of the loan. This fee will be collected annually on January 1st of each calendar year.

(3) There is no fee for site assessment and market analysis or preliminary feasibility in FY 2003.

(4) There is a non-refundable application fee of $2,500 when the application is submitted.

(5) There is a flat fee of $500 when a lender requests RHS to extend the term of a guarantee commitment.

(6) There is a flat fee of $500 when a lender requests RHS to extend a guarantee commitment after the period of the commitment lapses.

(7) There is a flat fee of $1,250 when a lender requests RHS to approve the transfer of property and assumption of the loan to an eligible prospective borrower.

(8) There is no lender application fee for lender approval in FY 2003.

Eligible Lenders: An eligible lender for the section 538 Guaranteed Loan Housing Program as required by 7 CFR 3565.102 must be a licensed business entity or Housing Finance Agency (HFA) in good standing in the state or states where it conducts business. Lender eligibility requirements are contained in 7 CFR 3565.102. Below is a list of some of the eligible lender criteria under 7 CFR 3565.102:

(1) Licensed business entity that meets the qualifications and has the approval of the Secretary of Housing and Urban Development (HUD) to make multi-family housing loans that are insured under the National Housing Act. A complete list of HUD approved lenders can be found on the HUD web site at *http://www.hud.gov.*

(2) A licensed business entity that meets the qualifications and has the approval of the Freddie Mac or Fannie Mae corporations to make multi-family housing loans that are sold to the same corporations. A complete list of Freddie Mac approved lenders can be found in Freddie Mac's web site at *http://*

www.freddiemac.com. Fannie Mae approved lenders are found at *http://www.fanniemae.com.*

(3) A state or local HFA with a top-tier rating from Moody's or Standard & Poors, or member of the Federal Home Loan Bank system, and the demonstrated ability to underwrite, originate, process, close, service, manage, and dispose of multi-family housing loans in a prudent manner.

(4) Be a GRRHP approved lender, defined as an entity with an executed multi-family housing Lender's Agreement with RHS.

(5) Lenders that can demonstrate the capacity to underwrite, originate, process, close, service, manage, and dispose of multi-family housing loans in a prudent manner. In order to be approved the lender will have to have an acceptable level of financial soundness as determined by a lender rating service. The submission of materials demonstrating capacity will be required if the lender's response is selected.

Lenders who are otherwise ineligible may become eligible if they maintain a correspondent relationship with an eligible lender that does have the capacity to underwrite, originate, process, close, service, manage, and dispose of multi-family housing loans in a prudent manner. In this case, the eligible lender must submit the response and application. All contractual and legal documentation will be signed between RHS and the lender that submitted the response and application.

RHS Lender Approval Application: Lenders whose responses are selected will be notified by the RHS to submit a request for RHS lender approval application within 30 days of notification. Lenders that have received RHS lender approval in the past and are in good standing do not need to reapply for RHS lender approval.

Submission of Documentation for RHS Lender Approval: All lenders that have not yet received RHS lender approval must submit a complete application for RHS lender approval to the Director of Multi-Family Housing Processing Division and the address as provided in the NOTICE SUBMISSION ADDRESS section of this notice. As RHS does not have a formal application form, a complete application will consist of a cover letter requesting RHS lender approval and the following documentation:

(1) Request for RHS lender approval on the lender's letterhead;

(2) Lenders who are HUD, Freddie Mac or Fannie Mae multi-family approved lenders are required to show evidence of this status, such as a copy of a letter designating the distinction.

(3) The lender's Loan Origination, Loan Servicing and Portfolio Management Handbooks. These handbooks should detail the lender's policies and procedures on loan origination through termination for multi-family loans;

(4) Portfolio performance data;

(5) Copies of standard documents that will be used in processing GRRHP loans;

(6) Resumes and qualifications of key personnel that will be involved in the GRRHP;

(7) Identification of standards and processes that deviate from those outlined in the GRRHP Origination and Servicing Handbook (HB–1–3565) found at *http://rdinit.usda.gov/regs;*

(8) A copy of the most recent audited financial statements;

(9) Lender specific information including: (a) Legal name and address, (b) list of principal officers and their responsibilities, (c) certification that the officers and principals of the lender have not been debarred or suspended from Federal programs, (d) Form AD 1047, (e) certification that the lender is not in default or delinquent on any Federal debt or loan, or possess an outstanding finding of deficiency in a federal housing program, and (f) certification of the lender's credit rating; and

(10) Documentation on bonding and insurance.

RHS Lender Approval Requirements: Lenders who request RHS lender approval must meet the standards stipulated in the 7 CFR 3565.103.

Lender Responsibilities: Lenders will be responsible for the full range of loan origination, underwriting, management, servicing, compliance issues and property disposition activities associated with their projects. The lender will be expected to provide guidance to the prospective borrower on the RHS requirements during the application phase. Once the guarantee is issued, the lender is expected to service each loan it underwrites or contract these services to another capable entity.

Discussion of Notice

Content of Notice Responses: All responses require lender information and project specific data. Incomplete responses will not be considered for funding. Lenders will be notified of incomplete responses. Complete responses are to include a signed cover letter from the lender on the lender's letterhead and the following information:

(1) Lender certification—The lender must certify that the lender will make a loan to the prospective borrower for the proposed project, under specified terms and conditions subject to the issuance of the RHS guarantee. Lender certification must be on the lender's letterhead and signed by both the lender and the prospective borrower.

(2) Project specific data—The lender must submit the project specific data below on the lender's letterhead, signed by both the lender and the prospective borrower.

Lender Name	Insert the lender's name.
Lender Tax ID #	Insert lender's tax ID #.
Lender Contact Name	Name of the lender contact for Loan.
Mailing Address	Lender's complete mailing address.
Phone #	Phone # for lender contact.
Fax #	Insert lender's fax #.
E-mail Address	Insert lender contact e-mail address.
Borrower Name and Organization Type	State whether borrower is a Limited Partnership, Corporation, Indian Tribe, etc.
Tax Classification Type	State whether borrower is for profit, not for profit, etc.
Borrower Tax ID #	Insert borrower's tax ID #.
Borrower Address, including County	Insert borrower's address and county.
Borrower Phone #	Insert borrower's phone #.
Principal or Key Member for the Borrower	Insert name and title.
Borrower Information and Statement of Housing Development Experience.	Attach relevant information.
New Construction or Acquisition or Repair or Rehabilitation of at Least $15,000 Per Unit.	State whether the project is new construction or acquisition or repair or rehabilitation.
Project Location Town or City	Town or city in which the project is located.

Project County	County in which the project is located.
Project State	State in which state the project is located.
Project Zip Code	Insert zip code.
Project Congressional District	Congressional District for project location.
Project Name	Insert project name.
Project Type	Family, senior (all residents over 55), or mixed
Property Description and Proposed Development Schedule	Provide as an attachment.
Total Project Development Cost	Enter amount for total project.
# of Units	Insert the # of units in the project.
Cost Per Unit	Total development cost divided by # of units.
Bedroom Mix	# of units by # of bedrooms.
Rent	Proposed rent structure.
Median Income for Community	Provide median income for the community.
Evidence of Site Control	Attach relevant information.
Description of Any Environmental Issues	Attach relevant information.
Loan Amount	Insert the loan amount.
Interest Credit (IC)	Is interest credit requested for this loan? (Yes or No).
If Above Is Yes, Should Proposal Be Considered Under Non–IC Selection, If IC Funds Are Exhausted?.	If Yes, proposal must show financial feasibility for NON–IC consideration.
Borrower's Proposed Equity	Insert amount.
Tax Credits	Will the project be allocated tax credits? How much? What is the estimated value of the tax credits awarded?
Other Sources of Funds	List all funding sources.
Loan to Value	Guaranteed loan divided by value of project.
Debt Coverage Ratio	Net Operating Income divided by debt service payments.
Percentage of Guarantee	Percentage guarantee requested.
Collateral	Attach relevant information.
Empowerment Zone (EZ) or Enterprise Community (EC)	Yes or No. Is the project in a recognized EZ or EC?
Colonia or Tribal Lands	Is the project in a Colonia or on an Indian Reservation? (Yes or No)
Population	Must be within the 20,000 population limit set for the program.
Is a Guarantee for Construction Being Requested? Are Advances Being Requested?.	State yes or no. The Agency will guarantee construction for construction advances, only as part of a combination construction and permanent loan.
Loan Term	Up to a 40-year amortized loan Balloon mortgages with a minimum 25-year term are eligible.

Scoring of Priority Criteria for Selection of Projects with Interest Credit Requests: RHS will allocate points to projects with requests for interest credit. Projects with no interest credit request will be reviewed for eligibility and viability on a continuous basis and without any priority selection criteria.

The six priority criteria for projects with requests for interest credit are listed below.

Priority 1—Projects located in eligible rural communities with the lowest populations will receive the highest points.

Population size	Points
0–5,000 people	15
5,001–10,000 people	10
10,001–15,000 people	5
15,001–20,000 people	0

Priority 2—The RHS will award points for projects with 3–5 bedroom as follows:

# of 3–5 Bedroom Units	Points
More than 15	20
10–15	15
5–9	10
1–4	5

Priority 3—The most needy communities as determined by the median income from the most recent census data will receive points. The RHS will allocate points to projects located in communities having the lowest median income. Points for median income will be awarded as follows:

Median income (dollars)	Points
Less than $35,000	20
$35,001–$45,000	15
$45,001–$55,000	10
$55,001–$65,000	5
More than $65,000	0

Priority 4—Projects that demonstrate partnering and leveraging in order to develop the maximum number of units and promote partnerships with state and local communities will also receive points. Points will be awarded as follows:

Loan to value ratio (percentage %)	Points
More than 75	10
70–75	15
Less than 70	20

Priority 5—The development of projects on Tribal Lands, or in an Empowerment Zone or Enterprise Community will receive points. The RHS will attribute 20 points to projects that are developed in any of the locations described in this priority.

Priority 6—The development of projects in a Colonia or in a place identified in the State's Consolidated Plan or State Needs Assessment as a high need community for multi-family housing will receive points. The RHS will attribute 20 points to projects that are developed in any of the locations described in this priority.

Notice Submission Address: Eligible lenders will send responses to: Director, Multi-Family Housing Processing Division, Rural Housing Service, U.S. Department of Agriculture, Room 1263, STOP 0781, 1400 Independence Avenue, SW, Washington, DC 20250–0781. Responses for participation in the program must be identified as ''Section 538 Guaranteed Rural Rental Housing Program'' on the envelope.

Notifications: Responses will be reviewed for completeness and eligibility. The RHS will notify those lenders whose responses are selected via letter. The RHS will request lenders without RHS lender approval to apply for RHS lender approval within 30 days upon receipt of notification of selection. For information regarding RHS lender approval, please refer to section *SUBMISSION OF DOCUMENTATION FOR RHS*

LENDER APPROVAL in this notice. Requests for RHS lender approval should be sent to the person and address listed in the *NOTICE SUBMISSION ADDRESS* section in this notice.

Lenders will also be invited to submit a complete application and the required application fee of $2,500 to the Rural Development State Office where the project is located.

Submission of GRRHP Applications: Notification letters will instruct lenders to contact the Rural Development State Office immediately following notification of selection to schedule required agency reviews. Rural Development State Office addresses can be found in the USDA Web site, *http://www.rurdev.usda.gov,* under the Rural Development program area.

Rural Development State Office staff will work with lenders in the development of an application package. Required documentation for a complete application package is stated in section 3 of HB–1–3565.

The deadline for the submission of a complete application and application fee is 90 days from the date of notification of response selection. If the application and fee are not submitted within 90 days from the date of notification, the selection is subject to cancellation, thereby allowing another response that is ready to proceed with processing to be selected.

Obligation of Program Funds: The RHS will only obligate funds to projects that meet the requirements for obligation, including undergoing a satisfactory environmental review in accordance with the National Environmental Protection Act (NEPA) and lenders who have submitted the $2,500 application fee and completed Form RD 3565–1 for the selected project.

Conditional Commitment: Once required documents for obligation and the application fee are received and all NEPA requirements have been met, the Rural Development State Office will issue a conditional commitment, which stipulates the conditions that must be fulfilled before the issuance of a guarantee, in accordance with 7 CFR 3565.303.

Issuance of Guarantee: The RHS will issue a guarantee to the lender for a project in accordance with 7 CFR 3565.303. No guarantee can be issued without a complete application, review of appropriate certifications, satisfactory assessment of the appropriate level of environmental review, and the completion of any conditional requirements.

Dated: December 20, 2002.

James E. Selmon, III,

Associate Administrator, Rural Housing Service.

[FR Doc. 02–32758 Filed 12–26–02; 8:45 am]

BILLING CODE 3410–XV–P

COMMITTEE FOR PURCHASE FROM PEOPLE WHO ARE BLIND OR SEVERELY DISABLED

Procurement List; Additions

AGENCY: Committee for Purchase From People Who Are Blind or Severely Disabled.

ACTION: Additions to Procurement List.

SUMMARY: This action adds to the Procurement List products and services to be furnished by nonprofit agencies employing persons who are blind or have other severe disabilities.

EFFECTIVE DATE: January 26, 2003.

ADDRESSES: Committee for Purchase From People Who Are Blind or Severely Disabled, Jefferson Plaza 2, Suite 10800, 1421 Jefferson Davis Highway, Arlington, Virginia 22202–3259.

FOR FURTHER INFORMATION CONTACT: Sheryl D. Kennerly, (703) 603–7740.

SUPPLEMENTARY INFORMATION: On October 9, 2001, September 13, October 4, and October 25, 2002, the Committee for Purchase From People Who Are Blind or Severely Disabled published notice (66 FR 51372, 67 FR 58013, 62224, and 65531) of proposed additions to the Procurement List.

The following comments pertain to Gloves, Surgeon's Sterile Disposable.

Comments were received from three suppliers of surgical gloves to the Government, in response to a notice the Committee placed in the online information service FedBizOpps. One supplier claimed that the large majority of its sales were of surgical gloves for the Department of Veterans Affairs (VA). However, a review of these sales disclosed that a very small percentage of the supplier's sales were surgical gloves for the VA. Consequently, the addition should not constitute a severe adverse impact on this supplier.

The second supplier stated that it is a small business which has been unable to sell to hospitals and the Government previously, but hoped to do so through a recent contract under the Federal Supply Schedules. The supplier believes that this Procurement List addition will cut it off from the Schedules, thus reducing its sales to the point that it will no longer be able to offer surgical gloves because it will lose the needed economy of scale. This supplier objected to the anticipated VA decision to standardize on the surgical gloves being added to the Procurement List, noting possible physician objections to standardization as well as the curtailment of the market represented by standardization on one glove. The supplier noted that the nonprofit agency designated by the Committee to provide the surgical glove already provides to the VA the examination glove on which VA standardized, and that the earlier standardization decision cost it some VA sales. Finally, the supplier claimed that prices for the surgical glove will increase inappropriately, as allegedly happened for the examination glove.

This supplier failed to provide sales data, so the Committee cannot quantitatively assess the supplier's impact claims. The surgical glove requirement being added to the Procurement List is limited to the VA requirement, so the supplier should be able to sell surgical and examination gloves to other Government agencies through the Schedules. The Committee is not responsible for VA standardization decisions, so it cannot consider effects of those decisions in judging whether its Procurement List additions unfairly impact suppliers. The prices for both surgical and examination gloves were agreed to through negotiation between VA and the designated nonprofit agency, and thus represent fair market prices under the Committee's pricing policies.

The third supplier provided information which allowed the Committee to estimate the percentage of its sales that will be lost because of the addition of this surgical glove to the Procurement List. However, this percentage is below the level which the Committee normally considers to constitute severe adverse impact on a supplier. The supplier also claimed that the addition would negatively impact numerous small businesses providing gloves to the Government, would prevent domestically manufactured gloves from being sold to the Government, would unfairly restrict competition and pricing for a large-value health care item, and would

threaten the operational readiness of the military and of Federal civilian agencies in support of homeland security by limiting surgical glove purchases to one non-commercial source.

This supplier's claims are based on the assumption that the Committee is adding all Government surgical glove purchases to the Procurement List, rather than the VA requirement for one type of surgical glove. The Committee is confident that the designated nonprofit agency, which is an experienced provider of examination gloves, will do equally well at fulfilling the limited requirement which is being added to the Procurement List. This Procurement List addition should have no significant effect on the ability of other surgical glove suppliers, including small businesses, to fill the needs of Government agencies outside VA, including the Department of Defense and Homeland Security, or on the price of those gloves. Concerning impact on the domestic manufacture of surgical gloves, it is the Committee's understanding that these gloves are not manufactured by anyone in the United States.

The following material pertains to all of the items being added to the Procurement List.

After consideration of the material presented to it concerning capability of qualified nonprofit agencies to provide the products and services and impact of the additions on the current or most recent contractors, the Committee has determined that the products and services listed below are suitable for procurement by the Federal Government under 41 U.S.C. 46–48c and 41 CFR 51–2.4.

I certify that the following action will not have a significant impact on a substantial number of small entities. The major factors considered for this certification were:

1. The action will not result in any additional reporting, recordkeeping or other compliance requirements for small entities other than the small organizations that will furnish the products and services to the Government.

2. The action will result in authorizing small entities to furnish the products and services to the Government.

3. There are no known regulatory alternatives which would accomplish the objectives of the Javits-Wagner-O'Day Act (41 U.S.C. 46–48c) in connection with the products and services proposed for addition to the Procurement List.

Accordingly, the following products and services are added to the Procurement List:

Products

Product/NSN: 4 Ply Cut End Mopheads
7920–00–NIB–0430, #12
7920–00–NIB–0431, #16
7920–00–NIB–0432, #24
7920–00–NIB–0434, #20
7920–00–NIB–0435, #32
NPA: New York City Industries for the Blind, Brooklyn, New York.
Contract Activity: Office Supplies & Paper Products Acquisition Center, New York, New York.
Product/NSN: Gloves, Surgeon's, Sterile Disposable
Glove, Surgeon, Encore, Size 5.5/6515–00–NIB–0121
Glove, Surgeon, Encore, Size 6.0/6515–00–NIB–0122
Glove, Surgeon, Encore, Size 6.5/6515–00–NIB–0123
Glove, Surgeon, Encore, Size 7.0/6515–00–NIB–0124
Glove, Surgeon, Encore, Size 7.5/6515–00–NIB–0125
Glove, Surgeon, Encore, Size 8.0/6515–00–NIB–0126
Glove, Surgeon, Encore, Size 8.5/6515–00–NIB–0127
Glove, Surgeon, Encore, Size 9.0/6515–00–NIB–0128
Glove, Surgeon, Derma Prene, Size 5.5/6515–00–NIB–0129
Glove, Surgeon, Derma Prene, Size 6.0/6515–00–NIB–0130
Glove, Surgeon, Derma Prene, Size 6.5/6515–00–NIB–0131
Glove, Surgeon, Derma Prene, Size 7.0/6515–00–NIB–0132
Glove, Surgeon, Derma Prene, Size 7.5/6515–00–NIB–0133
Glove, Surgeon, Derma Prene, Size 8.0/6515–00–NIB–0134
Glove, Surgeon, Derma Prene, Size 8.5/6515–00–NIB–0135
Glove, Surgeon, Derma Prene, Size 9.0/6515–00–NIB–0136
Glove, Surgeon, Encore Ultra-thick Orthopedic, Size 6.0/6515–00–NIB–0145
Glove, Surgeon, Encore Ultra-thick Orthopedic, Size 6.6/6515–00–NIB–0146
Glove, Surgeon, Encore Ultra-thick Orthopedic, Size 7.0/6515–00–NIB–0147
Glove, Surgeon, Encore Ultra-thick Orthopedic, Size 7.5/6515–00–NIB–0148
Glove, Surgeon, Encore Ultra-thick Orthopedic, Size 8.0/6515–00–NIB–0149
Glove, Surgeon, Encore Ultra-thick Orthopedic, Size 8.5/6515–00–NIB–0150
Glove, Surgeon, Encore Ultra-thick Orthopedic, Size 9.0/6515–00–NIB–0151
Glove, Surgeon, Encore MicrOptic, Size 5.5/6515–00–NIB–0152
Glove, Surgeon, Encore MicrOptic, Size 6.0/6515–00–NIB–0153
Glove, Surgeon, Encore MicrOptic, Size 6.5/6515–00–NIB–0154
Glove, Surgeon, Encore MicrOptic, Size 7.0/6515–00–NIB–0155
Glove, Surgeon, Encore MicrOptic, Size 7.5/6515–00–NIB–0156
Glove, Surgeon, Encore MicrOptic, Size 8.0/6515–00–NIB–0157
Glove, Surgeon, Encore MicrOptic, Size 8.5/6515–00–NIB–0158
Glove, Surgeon, Encore MicrOptic, Size 9.0/6515–00–NIB–0159
Glove, Surgeon, Encore Acclaim, Size 5.5/6515–00–NIB–0160
Glove, Surgeon, Encore Acclaim, Size 6.0/6515–00–NIB–0161
Glove, Surgeon, Encore Acclaim, Size 6.5/6515–00–NIB–0162
Glove, Surgeon, Encore Acclaim, Size 7.0/6515–00–NIB–0163
Glove, Surgeon, Encore Acclaim, Size 7.5/6515–00–NIB–0164
Glove, Surgeon, Encore Acclaim, Size 8.0/6515–00–NIB–0165
Glove, Surgeon, Encore Acclaim, Size 8.5/6515–00–NIB–0166
Glove, Surgeon, Encore Acclaim, Size 9.0/6515–00–NIB–0167
Glove, Surgeon, Biogel, Size 5.5/6515–00–NIB–0168
Glove, Surgeon, Biogel, Size 6.0/6515–00–NIB–0169
Glove, Surgeon, Biogel, Size 6.5/6515–00–NIB–0170
Glove, Surgeon, Biogel, Size 7.0/6515–00–NIB–0171
Glove, Surgeon, Biogel, Size 7.5/6515–00–NIB–0172
Glove, Surgeon, Biogel, Size 8.0/6515–00–NIB–0173
Glove, Surgeon, Biogel, Size 8.5/6515–00–NIB–0174
Glove, Surgeon, Biogel, Size 9.0/6515–00–NIB–0175
Glove, Surgeon, Biogel M, Size 5.5/6515–00–NIB–0176
Glove, Surgeon, Biogel M, Size 6.0/6515–00–NIB–0177
Glove, Surgeon, Biogel M, Size 6.5/6515–00–NIB–0178
Glove, Surgeon, Biogel M, Size 7.0/6515–00–NIB–0179
Glove, Surgeon, Biogel M, Size 7.5/6515–00–NIB–0180
Glove, Surgeon, Biogel M, Size 8.0/6515–00–NIB–0181
Glove, Surgeon, Biogel M, Size 8.5/6515–00–NIB–0182
Glove, Surgeon, Biogel M, Size 9.0/6515–00–NIB–0183
Glove, Surgeon, Biogel Orthopedic, Size 5.5/6515–00–NIB–0192

Glove, Surgeon, Biogel Orthopedic, Size 6.0/6515–00–NIB–0193
Glove, Surgeon, Biogel Orthopedic, Size 6.5/6515–00–NIB–0194
Glove, Surgeon, Biogel Orthopedic, Size 7.0/6515–00–NIB–0195
Glove, Surgeon, Biogel Orthopedic, Size 7.5/6515–00–NIB–0196
Glove, Surgeon, Biogel Orthopedic, Size 8.0/6515–00–NIB–0197
Glove, Surgeon, Biogel Orthopedic, Size 8.5/6515–00–NIB–0198
Glove, Surgeon, Biogel Orthopedic, Size 9.0/6515–00–NIB–0199
Glove, Surgeon, Biogel Indicator, Size 5.5/6515–00–NIB–0200
Glove, Surgeon, Biogel Indicator, Size 6.0/6515–00–NIB–0201
Glove, Surgeon, Biogel Indicator, Size 6.5/6515–00–NIB–0202
Glove, Surgeon, Biogel Indicator, Size 7.0/6515–00–NIB–0203
Glove, Surgeon, Biogel Indicator, Size 7.5/6515–00–NIB–0204
Glove, Surgeon, Biogel Indicator, Size 8.0/6515–00–NIB–0205
Glove, Surgeon, Biogel Indicator, Size 8.5/6515–00–NIB–0206
Glove, Surgeon, Biogel Indicator, Size 9.0/6515–00–NIB–0207
Glove, Surgeon, Biogel Neotech, Size 5.5/6515–00–NIB–0208
Glove, Surgeon, Biogel Neotech, Size 6.0/6515–00–NIB–0209
Glove, Surgeon, Biogel Neotech, Size 6.5/6515–00–NIB–0210
Glove, Surgeon, Biogel Neotech, Size 7.0/6515–00–NIB–0211
Glove, Surgeon, Biogel Neotech, Size 7.5/6515–00–NIB–0212
Glove, Surgeon, Biogel Neotech, Size 8.0/6515–00–NIB–0213
Glove, Surgeon, Biogel Neotech, Size 8.5/6515–00–NIB–0214
Glove, Surgeon, Biogel Neotech, Size 9.0/6515–00–NIB–0215

NPA: Bosma Industries for the Blind, Inc., Indianapolis, IN.

Contract Activity: Veterans Affairs National Acquisition Center, Hines, IL.

Services

Service Type/Location: Custodial Service, Camp Bullis, Buildings 5000, 6110, and 6201, San Antonio, Texas.

NPA: Professional Contract Services, Inc., Austin, Texas.

Contract Activity: MEDCOM Health Care Acquisition Activity, Fort Sam Houston, Texas.

Service Type/Location: Janitorial/Custodial, U.S. Army Reserve Center, Fraser, Michigan.

NPA: Jewish Vocational Service and Community Workshop, Inc., Southfield, Michigan.

Contract Activity: HQ, 88th Regional Support Command, Fort Snelling, Minnesota.

This action does not affect current contracts awarded prior to the effective date of this addition or options that may be exercised under those contracts.

Sheryl D. Kennerly,

Director, Information Management.

[FR Doc. 02–32764 Filed 12–26–02; 8:45 am]

BILLING CODE 6353–01–P

COMMITTEE FOR PURCHASE FROM PEOPLE WHO ARE BLIND OR SEVERELY DISABLED

Procurement List; Proposed Additions and Deletions

AGENCY: Committee for Purchase From People Who Are Blind or Severely Disabled.

ACTION: Proposed additions to and deletions from procurement list.

SUMMARY: The Committee is proposing to add to the Procurement List products and services to be furnished by nonprofit agencies employing persons who are blind or have other severe disabilities, and to delete products previously furnished by such agencies. *Comments Must Be Received On or Before:* January 26, 2003.

ADDRESSES: Committee for Purchase From People Who Are Blind or Severely Disabled, Jefferson Plaza 2, Suite 10800, 1421 Jefferson Davis Highway, Arlington, Virginia 22202–3259.

FOR FURTHER INFORMATION CONTACT: Sheryl D. Kennerly, (703) 603–7740.

SUPPLEMENTARY INFORMATION: This notice is published pursuant to 41 U.S.C. 47(a)(2) and 41 CFR 51–2.3. Its purpose is to provide interested persons an opportunity to submit comments on the possible impact of the proposed actions.

Additions

If the Committee approves the proposed additions, the entities of the Federal Government identified in this notice for each product or service will be required to procure the products and services listed below from nonprofit agencies employing persons who are blind or have other severe disabilities.

I certify that the following action will not have a significant impact on a substantial number of small entities. The major factors considered for this certification were:

1. If approved, the action will not result in any additional reporting, recordkeeping or other compliance requirements for small entities other than the small organizations that will furnish the products and services to the Government.

2. If approved, the action will result in authorizing small entities to furnish the products and services to the Government.

3. There are no known regulatory alternatives which would accomplish the objectives of the Javits-Wagner-O'Day Act (41 U.S.C. 46–48c) in connection with the products and services proposed for addition to the Procurement List. Comments on this certification are invited. Commenters should identify the statement(s) underlying the certification on which they are providing additional information.

The following products and services are proposed for addition to Procurement List for production by the nonprofit agencies listed:

Products

Product/NSN: Large Format Inkjet Paper, 7530–00–NIB–0670.

NPA: Wiscraft Inc.—Wisconsin Enterprises for the Blind, Milwaukee, Wisconsin.

Contract Activity: Office Supplies & Paper Products Acquisition Center, New York, New York.

Product/NSN: Skilcraft Aerosol Cleaners, Clean ''N'' Disinfect/7930–00–NIB–0223, Glass Pro/7930–00-NIB–0191, Maximum/7930–00–NIB–0192, Office Plus/7930–00–NIB–0190, X-Spot Carpet Stain Remover/7930–00—NIB–0224.

NPA: Lighthouse for the Blind, St. Louis, Missouri.

Contract Activity: Office Supplies & Paper Products Acquisition Center, New York, New York.

Services

Service Type/Location: Janitorial/Custodial, Department of Veterans Affairs, Community Based Outpatient Clinic, Muskegon, Michigan.

NPA: Goodwill Industries of West Michigan, Inc., Muskegon, Michigan.

Contract Activity: Department of Veterans Affairs, Battle Creek, Michigan.

Service Type/Location: Janitorial/Custodial, Herbert Hoover Library, West Branch, Iowa.

NPA: Goodwill Industries of Southeast Iowa, Iowa City, Iowa.

Contract Activity: National Archives & Records Service, College Park, Maryland.

Service Type/Location: Janitorial/Custodial, Naval Reserve Center, La Crosse, Wisconsin.

NPA: Riverfront Activity Center, Inc., La Crosse, Wisconsin.

Contract Activity: Naval Facilities Engineering Command, Crane, Indiana.
Service Type/Location: Janitorial/Custodial, U.S. Army Corps of Engineers, Saylorville Lake Project, Johnston, Iowa.
NPA: Goodwill Solutions, Inc., Des Moines, Iowa.
Contract Activity: U.S. Army Corps of Engineers—Contracting Div, Rock Island, Illinois.
Service Type/Location: Janitorial/Custodial, VA Central Iowa Health Care System, Day Care Center, Des Moines, Iowa.
NPA: Goodwill Solutions, Inc., Des Moines, Iowa.
Contract Activity: VA Central Iowa Health Care System, Des Moines, Iowa.
Service Type/Location: Printer Toner Cartridge & Ribbons Management, Veterans Affairs Medical Center, Danville, Illinois.
NPA: Thresholds Rehabilitation Inc., Chicago, Illinois.
Contract Activity: Veterans Affairs Medical Center, Danville, Illinois.
Service Type/Location: Rehabilitation Support Services, Veteran's Industries, Central Arkansas Veteran's Healthcare System, Little Rock and North Little Rock, Arkansas.
NPA: Pathfinder, Inc., Jacksonville, Arkansas.
Contract Activity: Central Arkansas Veterans Healthcare System, North Little Rock, Arkansas.

Deletions

I certify that the following action will not have a significant impact on a substantial number of small entities. The major factors considered for this certification were:

1. If approved, the action will not result in any additional reporting, recordkeeping or other compliance requirements for small entities other than the small organizations that will furnish the products to the Government.

2. If approved, the action will result in authorizing small entities to furnish the products to the Government.

3. There are no known regulatory alternatives which would accomplish the objectives of the Javits-Wagner-O'Day Act (41 U.S.C. 46–48c) in connection with the products proposed for deletion from the Procurement List.

The following products have been proposed for deletion from the Procurement List:

Products

Product/NSN: Marker, Tube Type, Fine Tip
7520–00–051–5031
7520–00–051–5033
7520–00–051–5035
7520–00–051–5036
7520–00–116–2886
7520–00–116–2887
7520–00–116–2888
7520–00–116–2889
7520–00–935–0979
7520–00–935–0980
7520–00–935–0981
7520–00–935–0982
NPA: Winston-Salem Industries for the Blind, Winston-Salem, North Carolina.
Contract Activity: Office Supplies & Paper Products Acquisition Center, New York, New York.
Product/NSN: Pen, Essential LVX Translucent and refills
7510–01–454–1174
7510–01–454–1178
7510–01–454–1185
7510–01–454–1188
NPA: Industries for the Blind, Inc., Milwaukee, Wisconsin.
Contract Activity: Office Supplies & Paper Products Acquisition Center, New York, New York.
Product/NSN: Pen, Executive Fountain and refills
7520–01–451–2277
NPA: Industries for the Blind, Inc., Milwaukee, Wisconsin.
Contract Activity: Office Supplies & Paper Products Acquisition Center, New York, New York.
Product/NSN: Pen, Metal Barrel & Refills
7510–01–446–4835
7510–01–446–4845
7510–01–446–4846
7510–01–446–4850
NPA: Industries for the Blind, Inc., Milwaukee, Wisconsin.
Contract Activity: Office Supplies & Paper Products Acquisition Center, New York, New York.
Product/NSN: Refill, Ballpoint Pen
7510–00–754–2688
NPA: Industries for the Blind, Inc., Milwaukee, Wisconsin.
Contract Activity: Office Supplies & Paper Products Acquisition Center, New York, New York.

Sheryl D. Kennerly,
Director, Information Management.

[FR Doc. 02–32765 Filed 12–26–02; 8:45 am]
BILLING CODE 6353–01–P

DEPARTMENT OF COMMERCE

[I.D. 121902C]

Submission for OMB Review; Comment Request

The Department of Commerce has submitted to the Office of Management and Budget (OMB) for clearance the following proposal for collection of information under the provisions of the Paperwork Reduction Act (44 U.S.C. Chapter 35).

Agency: National Oceanic and Atmospheric Administration (NOAA).

Title: International Dolphin Conservation Program.

Form Number(s): None.

OMB Approval Number: 0648–0387.

Type of Request: Regular submission.

Burden Hours: 144.

Number of Respondents: 38.

Average Hours Per Response: 30 minutes for a vessel permit application; 10 minutes for an operator permit application; 30 minutes for a waiver request to transmit the Eastern Tropical Pacific without a permit; 10 minutes for a vessel departure notification, change in permit operator information, or modified net notification; 10 hours for an experimental fishing permit application; 10 hours for an experimental fishing permit report; 15 minutes for a dolphin mortality limit request; 10 minutes for an arrival notification; 60 minutes for a tuna tracking form; 10 minutes for a monthly tuna storage removal report; 60 minutes for a monthly tuna receiving report; and 30 minutes to produce reports upon request.

Needs and Uses: The National Oceanic and Atmospheric Administration (NOAA) collects information to implement the International Dolphin Conservation Program Act. The Act allows entry of yellowfin tuna into the United States, under specific conditions, from nations in the Program that would otherwise be under embargo. The Act also allows U.S. fishing vessels to participate in the yellowfin tuna fishery in the eastern tropical Pacific Ocean on terms equivalent with the vessels of other nations. NOAA collects information to allow tracking and verification of ''dolphin safe'' and ''non-dolphin safe'' tuna products from catch through the U.S. market.

Affected Public: Business or other for-profit organizations, individuals or households.

Frequency: On occasion, monthly, annually.

Respondent's Obligation: Mandatory.

OMB Desk Officer: David Rostker, (202) 395–3897.

Copies of the above information collection proposal can be obtained by calling or writing Diana Hynek, Departmental Paperwork Clearance Officer, (202) 482–0266, Department of Commerce, Room 6625, 14th and Constitution Avenue, NW, Washington,

DC 20230 (or via the Internet at *dHynek@doc.gov*).

Written comments and recommendations for the proposed information collection should be sent within 30 days of publication of this notice to David Rostker, OMB Desk Officer, Room 10202, New Executive Office Building, Washington, DC 20503.

Dated: December 19, 2002.

Gwellnar Banks,

Management Analyst, Office of the Chief Information Officer.

[FR Doc. 02–32620 Filed 12–26–02; 8:45 am]

BILLING CODE 3510–22–S

DEPARTMENT OF COMMERCE

[I.D. 121902E]

Submission for OMB Review; Comment Request

The Department of Commerce has submitted to the Office of Management and Budget (OMB) for clearance the following proposal for collection of information under the provisions of the Paperwork Reduction Act (44 U.S.C. Chapter 35).

Agency: National Oceanic and Atmospheric Administration (NOAA).

Title: Reporting of Sea Turtle Incidental Take in Virginia Chesapeake Bay Pound Net Operations.

Form Number(s): None.

OMB Approval Number: None.

Type of Request: Regular submission.

Burden Hours: 74.

Number of Respondents: 80.

Average Hours Per Response: 10 minutes.

Needs and Uses: Year-round reporting of sea turtle incidental take is necessary to (1) monitor the level of incidental take in the state-managed pound net fishery, (2) ensure that the level of take does not exceed the Incidental Take Statement issued in conjunction with the Biological Opinion, and (3) verify that the seasonal pound net leader restriction is adequate to protect sea turtles. The respondents will be Virginia pound net fishermen.

Affected Public: Individuals or households, business or other for-profit organizations.

Frequency:

Respondent's Obligation: Mandatory.

OMB Desk Officer: David Rostker, (202) 395–3897.

Copies of the above information collection proposal can be obtained by calling or writing Diana Hynek, Departmental Paperwork Clearance Officer, (202) 482–0266, Department of Commerce, Room 6625, 14th and Constitution Avenue, NW, Washington, DC 20230 (or via the Internet at MClayton@doc.gov).

Written comments and recommendations for the proposed information collection should be sent within 30 days of publication of this notice to David Rostker, OMB Desk Officer, Room 10202, New Executive Office Building, Washington, DC 20503.

Dated: December 19, 2002.

Gwellnar Banks,

Management Analyst, Office of the Chief Information Officer.

[FR Doc. 02–32622 Filed 12–26–02; 8:45 am]

BILLING CODE 3510–22–S

DEPARTMENT OF COMMERCE

Foreign-Trade Zones Board

[Docket 59–2002]

Foreign-Trade Zone 98—Birmingham, AL, Application for Expansion of Manufacturing Authority, Subzone 98A—Mercedes-Benz U.S. International, Inc. (Motor Vehicles); Tuscaloosa County, AL

An application has been submitted to the Foreign-Trade Zones Board (the Board) by the City of Birmingham, Alabama, grantee of FTZ 98, on behalf of Mercedes-Benz U.S. International, Inc. (MBUSI), operator of Subzone 98A at the MBUSI motor vehicle manufacturing plant in Tuscaloosa County, Alabama, requesting an expansion of the scope of manufacturing authority to include new manufacturing capacity under FTZ procedures. The application was submitted pursuant to the provisions of the Foreign-Trade Zones Act, as amended (19 U.S.C. 81a–81u), and the regulations of the Board (15 CFR part 400). It was formally filed on December 17, 2002.

Subzone 98A was approved in 1996 for the manufacture of up to 80,000 light-duty passenger vehicles annually at the MBUSI plant (2,000 employees/900 acres/1.7 million sq.ft.) in Tuscaloosa County (Board Order 803, 61 FR 8237, March 4, 1996).

The applicant currently requests that the scope of FTZ manufacturing authority be extended to include additional production capacity (to a total of 250,000 vehicles annually) to be added within the existing boundaries of Subzone 98A.

Parts and materials that are sourced from abroad (approximately 15–20% of total purchases) include: oil, synthetic paint, glue/adhesives, chemical products/preparations, articles of plastic and rubber tubes/hoses/plates/sheets/film/profiles/fittings, handles/knobs, gaskets/seals, o-rings, rubber belts, tires, fasteners, gasoline and diesel engines, parts of engines (cylinder heads, short blocks, connecting rods), turbo/superchargers, compressors, pumps, fans, air conditioner components, filters, fire extinguishers, pulleys, flywheels, ignition parts, bushings, dampeners, textile cases, carpet sets, glass, mirrors, catalytic converters, steel flanges/fittings, springs, brake cables, articles of copper, aluminum fasteners, clamps, locks, hinges, pneumatic cylinders, clutches (and related parts), electronic controlling apparatus, resistors, transceivers, am-fm radio/cd receivers, compact disc players, navigational systems, alarms, electric motors, generators, valves, actuators, bearings, thermostats, transmission shafts/gears/sprockets, torque converters, hubs, universal joints, drive shafts, batteries, fuses, relays, voltage regulators, conductors, fiberoptic cables, switches, printed circuit assemblies, telephonic equipment, electrical control apparatus, starters, lighting/signaling equipment, windshield wipers, defrosters, parts of infrared lamps, bumpers, seat belts, airbags and modules, body stampings, wheels, radiators, exhaust systems, steering wheels/boxes, flat panel displays, pyrometers, flow/pressure/supply meters, oxygen sensors, speedometers, tachometers, and seats (duty rate range: free—20%). The list represents an expanded scope of MBUSI's existing scope of sourcing authority.

Expanded zone procedures would continue to exempt MBUSI from Customs duty payments on the foreign components used in production for export. On its domestic sales and exports to NAFTA countries, the company can choose the lower duty rate that applies to finished passenger vehicles (2.5%) for the foreign inputs noted above. The application indicates that the savings from FTZ procedures would help improve the MBUSI plant's international competitiveness.

In accordance with the Board's regulations, a member of the FTZ Staff has been designated examiner to investigate the application and report to the Board.

Public comment on the application is invited from interested parties. Submissions (original and three copies) shall be addressed to the Board's Executive Secretary at the following addresses:

1. *Submissions via Express/Package Delivery Services:* Foreign-Trade Zones Board, U.S. Department of Commerce, Franklin Court Building, Suite 4100W, 1099 14th Street, NW., Washington, DC 20005; or,

2. *Submissions via the U.S. Postal Service:* Foreign-Trade Zones Board, U.S. Department of Commerce, FCB–4100W, 1401 Constitution Ave., NW., Washington, DC 20230.

The closing period for their receipt is February 25, 2003. Rebuttal comments in response to material submitted during the foregoing period may be submitted during the subsequent 15-day period (to March 12, 2003).

A copy of the application will be available for public inspection at the Office of the Foreign-Trade Zones Board's Executive Secretary at address No. 1 listed above.

Dated: December 17, 2002.

Dennis Puccinelli,

Executive Secretary.

[FR Doc. 02–32727 Filed 12–26–02; 8:45 am]

BILLING CODE 3510–DS–P

DEPARTMENT OF COMMERCE

Foreign-Trade Zones Board

[Docket 62–2002]

Foreign-Trade Zone 72—Indianapolis, IN, Application for Subzone, Decatur Mold, Tool and Engineering, Inc. (Plastic Injection Molds); North Vernon, IN

An application has been submitted to the Foreign-Trade Zones Board (the Board) by the Indianapolis Airport Authority, grantee of FTZ 72, requesting special-purpose subzone status for the manufacturing and warehousing facilities of Decatur Mold, Tool and Engineering, Inc. (Decatur Mold), located in North Vernon, Indiana. The application was submitted pursuant to the provisions of the Foreign-Trade Zones Act, as amended (19 U.S.C. 81a–81u), and the regulations of the Board (15 CFR part 400). It was formally filed on December 17, 2002.

The Decatur Mold facility is comprised of two sites with 150 employees in Jennings County, Indiana: Site 1 (20 acres)—located at 3330 and 3430 North State Highway 7, North Vernon; and Site 2 (78 acres)—located at Rural Route 5/E County Road 175N, North Vernon. The facilities are used for the manufacturing, storage and distribution of plastic injection molds (HTS, 8477 and 8480, duty rate 3.1%) and components. Components and materials sourced from abroad (representing 5% of all parts used in manufacturing) include: metal stamp dies, thermolators, plastic material dryers, electronic weighing scales, belt type conveyors, robots—calendaring, color feeders, pins, sleeves, heaters, material grinders, hot stamps, parts for robots, mold bases, sonic welders, and hot tip controls (HTS 8207, 8418, 8419, 8423, 8428, 8477, 8479, 8480, 8515, and 9032 duty rate ranges from duty free to 5.7%).

FTZ procedures would exempt Decatur Mold from Customs duty payments on the foreign components used in export production. Some 30 percent of the plant's shipments are exported. On its domestic sales, Decatur Mold would be able to choose the duty rates during Customs entry procedures that apply to finished molds (3.1%) for the foreign inputs noted above. The request indicates that the savings from FTZ procedures would help improve the plant's international competitiveness.

In accordance with the Board's regulations, a member of the FTZ staff has been appointed examiner to investigate the application and report to the Board.

Public comment is invited from interested parties. Submissions (original and 3 copies) shall be addressed to the Board's Executive Secretary at one of the following addresses:

1. Submissions Via Express/Package Delivery Services: Foreign-Trade-Zones Board, U.S. Department of Commerce, Franklin Court Building, Suite 4100W, 1099 14th St. NW., Washington, DC 20005; or

2. Submissions Via the U.S. Postal Service: Foreign-Trade-Zones Board, U.S. Department of Commerce, FCB, Suite 4100W, 1401 Constitution Ave. NW., Washington, DC 20230.

The closing period for their receipt is February 25, 2003. Rebuttal comments in response to material submitted during the foregoing period may be submitted during the subsequent 15-day period (to March 12, 2003).

A copy of the application and accompanying exhibits will be available for public inspection at the Office of the Foreign-Trade-Zones Board's Executive Secretary at the first address listed above, and at the U.S. Department of Commerce Export Assistance Center, Penwood One, Suite 106, 11405 North Pennsylvania Street, Carmel, IN 46032.

Dated: December 19, 2002.

Pierre Duy,

Acting Executive Secretary.

[FR Doc. 02–32730 Filed 12–26–02; 8:45 am]

BILLING CODE 3510–DS–P

DEPARTMENT OF COMMERCE

Foreign-Trade Zones Board

[Docket 61–2002]

Foreign-Trade Zone 124—Gramercy, LA, Application for Subzone, Ergon St. James, Inc. (Oil Terminal); St. James, LA

An application has been submitted to the Foreign-Trade Zones Board (the Board) by the Port of South Louisiana, grantee of FTZ 124, requesting special-purpose subzone status for the oil terminal facilities of Ergon St. James, Inc. (Ergon), located in St. James, Louisiana. The application was submitted pursuant to the provisions of the Foreign-Trade Zones Act, as amended (19 U.S.C. 81a–81u), and the regulations of the Board (15 CFR part 400). It was formally filed on December 17, 2002.

The Ergon facilities (718 acres, 7 tanks, 1.5 million barrel capacity) are located at 7405 Highway 18, St. James, Louisiana. The terminal facilities (12 employees), are used for the receipt, storage, and distribution of crude oil to the Ergon Refining, Inc. refinery in Vicksburg, Mississippi. All of the crude oil is sourced from abroad. Ergon Refining, Inc. has also submitted an application for subzone status at its Vicksburg refinery (Docket 61–2002).

Zone procedures would allow Ergon to defer duty payments until merchandise is shipped from the facility and entered for consumption. The company has applied for subzone status at its refinery and terminal so that crude oil could be shipped from the St. James terminal to the Vicksburg refinery in zone status. The request indicates that the savings from FTZ procedures would help improve the company's international competitiveness.

In accordance with the Board's regulations, a member of the FTZ staff has been appointed examiner to investigate the application and report to the Board.

Public comment is invited from interested parties. Submissions (original and 3 copies) shall be addressed to the Board's Executive Secretary at one of the following addresses:

1. Submissions Via Express/Package Delivery Services: Foreign-Trade-Zones Board, U.S. Department of Commerce, Franklin Court Building, Suite 4100W, 1099 14th St. NW., Washington, DC 20005; or

2. Submissions Via the U.S. Postal Service: Foreign-Trade-Zones Board, U.S. Department of Commerce, FCB, Suite 4100W, 1401 Constitution Ave. NW., Washington, DC 20230.

The closing period for their receipt is February 25, 2003. Rebuttal comments in response to material submitted during the foregoing period may be submitted during the subsequent 15-day period (to March 12, 2003).

A copy of the application and accompanying exhibits will be available for public inspection at the Office of the Foreign-Trade Zones Board's Executive Secretary at the first address listed above, and at the U.S. Department of Commerce Export Assistance Center, One Canal Place, 365 Canal Street, Suite 1170, New Orleans, LA 70130.

Dated: December 18, 2002.

Dennis Puccinelli,

Executive Secretary.

[FR Doc. 02–32729 Filed 12–26–02; 8:45 am]

BILLING CODE 3510–DS–P

DEPARTMENT OF COMMERCE

Foreign-Trade Zones Board

[Docket 60–2002]

Foreign-Trade Zone 158—Vicksburg/Jackson, MS, Application for Subzone, Ergon Refining, Inc. (Oil Refinery); Vicksburg, MS

An application has been submitted to the Foreign-Trade Zones Board (the Board) by the Vicksburg-Jackson Foreign-Trade Zone, grantee of FTZ 158, requesting special-purpose subzone status for the oil refining facilities of Ergon Refining, Inc. (Ergon), located in Vicksburg, Mississippi. The application was submitted pursuant to the provisions of the Foreign-Trade Zones Act, as amended (19 U.S.C. 81a–81u), and the regulations of the Board (15 CFR part 400). It was formally filed on December 17, 2002.

The refinery complex (25,000 BPD capacity, with 630,000 barrel storage capacity) is located at two sites in Vicksburg, Mississippi: Site 1 (80 acres)—main refinery complex, located at 2625 Haining Road, Vicksburg; Site 2 (21 acres)—refinery terminal, located at 2611 Haining Road, Vicksburg. The refinery (174 employees) is used to produce specialty petroleum and asphalt products, and refinery by-products including diesel, lube oils, naphtha and asphalt. All of the crude oil (100 percent of inputs) is sourced from abroad. Ergon St. James, Inc. has also submitted an application for subzone status at the company's crude oil terminal in St. James, Louisiana to supply the proposed subzone in Vicksburg (Docket 61–2002).

Zone procedures would exempt the refinery from Customs duty payments on the foreign products used in its exports. On domestic sales, the company would be able to choose the Customs duty rates that apply to certain petrochemical feedstocks and refinery by-products (duty-free) by admitting incoming foreign crude in non-privileged foreign status. The duty rates on inputs range from 5.25 cents/barrel to 10.5 cents/barrel. The application indicates that the savings from zone procedures would help improve the plant's international competitiveness.

In accordance with the Board's regulations, a member of the FTZ staff has been appointed examiner to investigate the application and report to the Board. Public comment is invited from interested parties. Submissions (original and 3 copies) shall be addressed to the Board's Executive Secretary at one of the following addresses:

1. Submissions Via Express/Package Delivery Services: Foreign-Trade-Zones Board, U.S. Department of Commerce, Franklin Court Building, Suite 4100W, 1099 14th St. NW., Washington, DC 20005; or

2. Submissions Via the U.S. Postal Service: Foreign-Trade-Zones Board, U.S. Department of Commerce, FCB, Suite 4100W, 1401 Constitution Ave. NW., Washington, DC 20230.

The closing period for their receipt is February 25, 2003. Rebuttal comments in response to material submitted during the foregoing period may be submitted during the subsequent 15-day period (to March 12, 2003).

A copy of the application and accompanying exhibits will be available for public inspection at the Office of the Foreign-Trade Zones Board's Executive Secretary at the first address listed above, and at the U.S. Department of Commerce Export Assistance Center, 175 East Capitol St., Jackson, MS 39201.

Dated: December 18, 2002.

Dennis Puccinelli,

Executive Secretary.

[FR Doc. 02–32728 Filed 12–26–02; 8:45 am]

BILLING CODE 3510–DS–P

DEPARTMENT OF COMMERCE

Foreign-Trade Zones Board

[Docket 63–2002]

Foreign-Trade Zone 38, Greenwood, SC, Expansion of Manufacturing Authority—Subzone 38C; Fuji Photo Film, Inc. (Addition of Medical Imaging Products, and Expansion of Production of Color Negative Photographic Film and Paper)

An application has been submitted to the Foreign-Trade Zones Board (the Board) by the South Carolina State Ports Authority, grantee of FTZ 38, requesting on behalf of Fuji Photo Film, Inc. (Fuji), to expand the scope of manufacturing authority under zone procedures within Subzone 38C, at the Fuji plant in Greenwood, South Carolina. The application was submitted pursuant to the Foreign-Trade Zones Act, as amended (19 U.S.C. 81a–81u), and the regulations of the Board (15 CFR part 400). It was formally filed on December 17, 2002.

Subzone 38C was approved by the Board in 2000 at a 488-acre site in Greenwood, South Carolina. Authority was granted for the the manufacture and distribution of imaging and information products (graphic arts film; pre-sensitized offset printing plates; blank videotapes and computer back-up tape; one-time-use cameras; and color negative photographic paper and film) (Board Order 1084, 65 FR 18283, April 7, 2000).

Fuji is now proposing to expand the scope of manufacturing activity conducted under zone procedures at Subzone 38C to include additional finished products (medical imaging products, components, and related products), and to increase the overall level of production authorized under FTZ procedures of color negative photographic paper and film. The new finished products have duty rates of 3.7% *ad valorem*. Foreign-sourced materials under the proposed expanded scope may include the following items: prepared glues and adhesives; photographic plates or film for X-ray; self-adhesive tape; silver laminated film; cardboard; paper laminated film; paper bags; printed labels; polyethylene bags; derivatives of anthraquinone, phenothiazine, anthrazine, phthalazine, phenol, triazole, triadiazole, benzoxazole, benzimidazole, and naphthoxazole; benzoquinone; hydrogen peroxide; silver salt of fatty acid; vinyl acetate copolymer; polymethyl methacrylate in gelatin solution; chromium compound; triethylamine; polyethylene

terephthalate; benzimidazole; nipacide; dextrane; calcium chloride; paraffin wax; and ammonia solution. Duty rates on these materials range from duty-free to 8.7% *ad valorem.*

Expanded subzone authority would exempt Fuji from Customs duty payments on the aforementioned foreign components when used in export production. On its domestic sales, Fuji would be able to choose the lower duty rate that applies to the finished products for the foreign components, when applicable.

In accordance with the Board's regulations, a member of the FTZ Staff has been designated examiner to investigate the application and report to the Board.

Public comment is invited from interested parties. Submissions (original and 3 copies) shall be addressed to the Board's Executive Secretary at one of the following addresses:

1. Submissions via Express/Package Delivery Services: Foreign-Trade-Zones Board, U.S. Department of Commerce, Franklin Court Building—Suite 4100W, 1099 14th St. NW., Washington, DC 20005; or

2. Submissions via the U.S. Postal Service: Foreign-Trade-Zones Board, U.S. Department of Commerce, FCB—Suite 4100W, 1401 Constitution Ave. NW., Washington, DC 20230.

The closing period for their receipt is February 25, 2003. Rebuttal comments in response to material submitted during the foregoing period may be submitted during the subsequent 15-day period to March 12, 2003.

A copy of the application and accompanying exhibits will be available for public inspection at the Office of the Foreign-Trade Zones Board's Executive Secretary at address Number 1 listed above, and at the U.S. Department of Commerce Export Assistance Center, 555 North Pleasantburg Drive, Building 1, Suite 109, Greenville, SC 29607.

Dated: December 17, 2002.

Dennis Puccinelli,

Executive Secretary.

[FR Doc. 02–32726 Filed 12–26–02; 8:45 am]

BILLING CODE 3510–DS–P

DEPARTMENT OF COMMERCE

International Trade Administration

[A-570–831]

Fresh Garlic From the People's Republic of China: Notice of Extension of Time Limit for the Preliminary Results of a New Shipper Antidumping Duty Review

AGENCY: Import Administration, International Trade Administration, Department of Commerce.

ACTION: Notice of Extension of Time Limit for the Preliminary Results of a New Shipper Antidumping Duty Review.

SUMMARY: The Department of Commerce is extending the time limit for the preliminary results of a new shipper review of the antidumping duty order on fresh garlic from the People's Republic of China until no later than April 22, 2003. This extension applies to the new shipper review for Huaiyang Hongda Dehydrated Vegetable Company. The period of review is November 1, 2001, through April 30, 2002.

EFFECTIVE DATE: December 27, 2002.

FOR FURTHER INFORMATION CONTACT: Edythe Artman, AD/CVD Enforcement 3, Import Administration, International Trade Administration, U.S. Department of Commerce, 14th Street and Constitution Avenue, N.W., Washington, D.C. 20230; telephone: (202) 482–3931.

SUPPLEMENTARY INFORMATION:

Background

On November 30, 2001, Huaiyang Hongda Dehydrated Vegetable Company (Hongda) requested a new shipper review, in accordance with section 751(a)(2)(B) of the Tariff Act of 1930, as amended (the Act), and 19 CFR 351.214(b) (2001), of exports of its merchandise to the United States. On January 7, 2002, the Department initiated a new shipper review for Hongda. *See Fresh Garlic From the People's Republic of China: Initiation of New Shipper Antidumping Duty Reviews,* 67 FR 715 (January 7, 2002). We rescinded this review on July 3, 2002, after finding that the date of sale and entry of the company's reviewable sale fell outside the period of review. *See Fresh Garlic from the People's Republic of China: Rescission of New Shipper Antidumping Duty Review and Initiation of New Shipper Antidumping Duty Review*, 67 FR 44594 (July 3, 2002). At the same time, we initiated a new shipper review that covers Hongda's entries, exports, and sales during the period of November 1, 2001, through April 30, 2002. Currently, the deadline for completing the preliminary results of this review is December 23, 2002.

Extension of Time Limit for Preliminary Results of New Shipper Review

A number of complex factual and legal questions related to the calculation of the dumping margin have arisen in this review. For example, the petitioners have raised issues concerning the factors of production information to be applied to sales of merchandise that Hongda obtained from an unaffiliated supplier. As a result, we are still evaluating Hongda's responses to the original questionnaire and two supplemental questionnaires and comments submitted by the petitioners. Therefore, we find that the new shipper review is extraordinarily complicated and it is not practicable to complete the review within the time limits mandated by section 751(a)(2)(B)(iv) of the Act. In accordance with section 751(a)(2)(B)(iv) of the Act and 19 CFR 214(i)(2), we are extending the time limit for the preliminary results of this review to no later than April 22, 2003.

Dated: December 20, 2002.

Louis Apple,

Acting Deputy Assistant Secretary for AD/CVD Enforcement I.

[FR Doc. 02–32783 Filed 12–26–02; 8:45 am]

BILLING CODE 3510–DS–S

DEPARTMENT OF COMMERCE

International Trade Administration

[A-570–878]

Notice of Preliminary Determination of Sales at Less Than Fair Value: Saccharin From the People's Republic of China

AGENCY: Import Administration, International Trade Administration, Department of Commerce.

EFFECTIVE DATE: December 27, 2002.

FOR FURTHER INFORMATION CONTACT: Mark Hoadley or Brett Royce (Suzhou Fine Chemicals Group Co., Ltd.) at (202) 482–3148 or (202) 482–4106, Javier Barrientos or Jessica Burdick (Shanghai Fortune Chemical Co., Ltd.) at (202) 482–2243 or (202) 482–0666, or Sally C. Gannon at (202) 482–0162; Office of AD/CVD Enforcement VII, Import Administration, International Trade Administration, U.S. Department of Commerce, 14th Street and Constitution Avenue, N.W., Washington D.C. 20230.

SUPPLEMENTARY INFORMATION:

Preliminary Determination

We preliminarily determine that saccharin from the People's Republic of China (PRC) is being, or is likely to be, sold in the United States at less than fair value (LTFV), as provided in section 733 of the Tariff Act of 1930, as amended (the Act). The estimated margins of sales at LTFV are shown in the ''Suspension of Liquidation'' section of this notice.

Case History

On July 31, 2002, the Department initiated an investigation to determine whether imports of saccharin are being, or are likely to be, sold in the United States at LTFV (67 FR 51536(August 8, 2002)). Since the initiation of this investigation, the following events have occurred. On August 30, 2002, the International Trade Commission (ITC) published its preliminary determination that there is a reasonable indication that an industry in the United States is materially injured by reason of imports of saccharin from the PRC. *See Saccharin from China*, 67 FR 55872 (August 30, 2002).

On August 14, 2002, the Department requested quantity and value (Q&V) information from a total of five Chinese companies, which were identified in the *Petition for the Imposition of Antidumping Duties: Saccharin from the People's Republic of China (PRC)*, dated July 11, 2002 (*Petition*). These five companies were: Suzhou Fine Chemical Group Co., Ltd. (Suzhou), Shanghai Fortune Chemical Co., Ltd. (Shanghai Fortune), Kaifeng Xinghua Fine Chemical Factory (Kaifeng No. 3 Chemical Plant) (Kaifeng), Taijin Changhie (Taijin) and Taijin North Food (North Food). On August 14, 2002, the Department also sent the government of the PRC a letter requesting assistance locating all known Chinese producers/exporters of saccharin who exported saccharin to the United States during the period of investigation (POI). On August 20, 2002, we received a letter from Suzhou, requesting a one-week extension (from August 23, 2002 to August 30, 2002) of the filing deadline for the August 14, 2002 Q&V questionnaire. The Department granted this request.

On August 23, 2002, we received responses to our Q&V information request from Shanghai Fortune and Kaifeng. On August 30, 2002, we received a response from Suzhou. We did not receive responses from Taijin or North Food, nor did we receive a response from the PRC government regarding other producers/exporters of saccharin. Based on the information submitted for the record, the Department selected the following two mandatory respondents: Suzhou and Shanghai Fortune. *See Selection of Respondents for Antidumping Duty Investigation of Saccharin from the People's Republic of China* (A-570–878), Memorandum from Javier Barrientos, Case Analyst, through Sally C. Gannon, Program Manager, Office VII, to Barbara E. Tillman, Director, Office VII, AD/CVD Enforcement Group III (September 10, 2002) (*Respondent Selection Memorandum*). On September 10, 2002, the Department issued its antidumping duty questionnaire to Suzhou and Shanghai Fortune.

On October 7, 2002, petitioner, PMC Specialties Group, Inc., alleged that critical circumstances exist with respect to imports of saccharin from the PRC, requesting that the Department issue a preliminary determination of critical circumstances at the earliest practicable time. Respondents filed responses to the allegation on October 16, 2002, October 22, 2002, and November 1, 2002. Petitioner filed additional submissions supporting its allegation on October 18, 2002 and November 7, 2002.

In accordance with 19 CFR 351.206(c)(2)(I), because petitioner submitted a critical circumstances allegation more than 20 days before the scheduled date of the preliminary determination, the Department must issue a preliminary critical circumstances determination not later than the date of the preliminary determination. On November 15, 2002, the Department issued a memorandum recommending that petitioner's argument that the comparison periods used in determining whether ''massive imports'' have taken place be shifted back to April 2002 be rejected, and, thus, determining that there was not a sufficient basis on which to examine critical circumstances in this investigation. *See Saccharin from the People's Republic of China: Critical Circumstances Allegation and Determination of ''Massive Imports,''* Memorandum from Mark Hoadley, Analyst, through Barbara E. Tillman, Director, Office VII, AD/CVD Enforcement Group III, and Sally C. Gannon, Program Manager, Office VII, to Joseph A. Spetrini, Deputy Assistant Secretary for Import Administration, Group III (November 15, 2002). On December 11, 2002, the Department denied petitioner's request that the Department request entry information from the U.S. Customs Service (Customs) pursuant to section 732(e) of the Act. *See Saccharin from the People's Republic of China: Denial of Request to U.S. Customs for Entry Information*, Memorandum from Mark Hoadley, Senior Analyst, through Sally Gannon, Program Manager, Group III, Office VII, to the File (December 10, 2002).

On October 18, 2002, the Department received Section A responses from Suzhou and Shanghai Fortune. Additionally, on October 18, 2002, the Department received an unsolicited Section A response from Kaifeng. On October 23, 2002, petitioner filed comments regarding Suzhou's and Shanghai Fortune's Section A questionnaire responses. On October 25, 2002, the Department issued a supplemental Section A questionnaire to Suzhou and Shanghai Fortune. Additionally, on October 25, 2002, the Department received Sections C & D responses from Suzhou and Shanghai Fortune. On November 1, 2002, the Department issued a supplemental Section A questionnaire to Kaifeng. On November 4, 2002, the Department issued a Section C & D supplemental antidumping duty questionnaire to Suzhou and Shanghai Fortune. On November 8, 2002, petitioner filed comments regarding Suzhou's and Shanghai Fortune's Section C & D questionnaire responses. On November 14, 2002, the Department received Section A supplemental responses from Suzhou, Shanghai Fortune, and Kaifeng. On November 25, 2002, petitioner filed comments regarding Suzhou's Section A supplemental response. On November 25, 2002, the Department received Section C & D supplemental responses from Suzhou and Shanghai Fortune. On November 25, 2002, petitioner submitted timely comments and public data regarding appropriate choices for surrogate market, production factors, and values for the PRC. On December 4, 2002, petitioner filed comments for consideration in the preliminary determination.

On November 29, 2002 and December 4, 2002, the Department sent additional supplemental questionnaires to Shanghai Fortune. On December 11, 2002 and December 16, 2002, the Department received responses to these requests from Shanghai Fortune. On December 6, 2002, Department officials met with petitioner to discuss issues and concerns regarding the date of sale methodology. *See Meeting with Petitioner's Counsel Regarding the Investigation of Saccharin from the People's Republic of China*, Memorandum to the File from Jessica Burdick through Sally C. Gannon (December 6, 2002). On December 12, 2002, the petitioner submitted further comments on the record with regard to this issue. The Department intends to send a supplemental questionnaire to

Suzhou on this issue following this preliminary determination.

Period of Investigation

The POI is January 1, 2002 through June 30, 2002. This period corresponds to the two most recent fiscal quarters prior to the month of the filing of the Petition (i.e., July 2002), and is in accordance with our regulations. *See* 19 CFR 351.204(b)(1).

Scope of the Investigation

The product covered by this investigation is saccharin. Saccharin is defined as a non-nutritive sweetener used in beverages and foods, personal care products such as toothpaste, table top sweeteners, and animal feeds. It is also used in metalworking fluids. There are four primary chemical compositions of saccharin: (1) sodium saccharin (American Chemical Society Chemical Abstract Service (CAS) Registry ι128–44–9); (2) calcium saccharin (CAS Registry ι6485–34–3); (3) acid (or insoluble) saccharin (CAS Registry ι81–07–2); and (4) research grade saccharin. Most of the U.S.-produced and imported grades of saccharin from the PRC are sodium and calcium saccharin, which are available in granular, powder, spray-dried powder, and liquid forms.

The merchandise subject to this investigation is classifiable under subheading 2925.11.00 of the Harmonized Tariff Schedule of the United States (HTSUS) and includes all types of saccharin imported under this HTSUS subheading, including research and specialized grades. Although the HTSUS subheading is provided for convenience and Customs purposes, the Department's written description of the scope of this investigation remains dispositive.

Non-Market Economy Country Status

The Department has treated the PRC as a non-market economy (NME) country in all past antidumping investigations. *See, e.g., Notice of Final Determination of Sales at Less Than Fair Value: Ferrovanadium from the People's Republic of China*, 67 FR 71137 (November 29, 2002); *Notice of Final Determination of Sales at Less Than Fair Value: Cold-Rolled Carbon Steel Flat Products from the People's Republic of China*, 67 FR 62107 (October 3, 2002). A designation as an NME remains in effect until it is revoked by the Department (*see* section 771(18)(c)) of the Act). No party to this investigation has requested a revocation of the PRC's NME status. We have, therefore, preliminarily determined to continue to treat the PRC as an NME country. When the Department is investigating imports from an NME, section 773(c)(1) of the Act directs us to base normal value (NV) on the NME producer's factors of production, valued in a comparable market economy that is a significant producer of comparable merchandise. The sources of individual factor prices are discussed under the ''Factor Valuations'' section, below. Furthermore, no interested party has requested that the saccharin industry in the PRC be treated as a market-oriented industry, and no information has been provided that would lead to such a determination. Therefore, we have not treated the saccharin industry in the PRC as a market-oriented industry in this investigation.

Separate Rates

In proceedings involving NME countries, the Department begins with a rebuttable presumption that all companies within the country are subject to government control, and, thus, should be assessed a single antidumping duty deposit rate. It is the Department's policy to assign all exporters of merchandise subject to investigation in an NME country this single rate, unless an exporter can demonstrate that it is sufficiently independent so as to be eligible for a separate rate. The two respondents selected in this investigation, Suzhou and Shanghai Fortune, as well as Kaifeng, have provided company-specific separate rates information and have each stated that they meet the standards for the assignment of separate rates.

We considered whether each of these three PRC companies is eligible for a separate rate. The Department's separate rate test is not concerned, in general, with macroeconomic/border-type controls, *e.g.*, export licenses, quotas, and minimum export prices, particularly if these controls are imposed to prevent dumping. Rather, the test focuses on controls over the investment, pricing, and output decision-making process at the individual firm level. *See, e.g., Certain Cut-to-Length Carbon Steel Plate from Ukraine: Final Determination of Sales at Less than Fair Value*, 62 FR 61754, 61757 (November 19, 1997); and *Tapered Roller Bearings and Parts Thereof, Finished and Unfinished, from the People's Republic of China: Final Results of Antidumping Duty Administrative Review*, 62 FR 61276, 61279 (November 17, 1997).

To establish whether a firm is sufficiently independent from government control of its export activities to be entitled to a separate rate, the Department analyzes each entity exporting the subject merchandise under a test arising out of the *Final Determination of Sales at Less Than Fair Value: Sparklers from the People's Republic of China*, 56 FR 20588 (May 6, 1991) (*Sparklers*), as amplified by *Final Determination of Sales at Less Than Fair Value: Silicon Carbide from the People's Republic of China*, 59 FR 22585 (May 2,1994) (*Silicon Carbide*). In accordance with the separate rates criteria, the Department assigns separate rates in NME cases only if respondents can demonstrate the absence of both de jure and de facto governmental control over export activities.

1. Absence of De Jure Control

The Department considers the following de jure criteria in determining whether an individual company may be granted a separate rate: (1) an absence of restrictive stipulations associated with an individual exporter's business and export licenses; (2) any legislative enactments

decentralizing control of companies; and (3) any other formal measures by the government decentralizing control of companies. *See Sparklers*, 56 FR at 20589.

The three PRC companies seeking separate rates reported that the subject merchandise was not subject to any government export provisions[1] or export licensing, and was not subject to export quotas during the POI. Each company also submitted copies of its respective business license. We found no inconsistencies with the exporters' claims of the absence of restrictive stipulations associated with the exporters' business licenses. Each exporter submitted copies of statutory and regulatory authority establishing the de jure absence of government control over the companies. More specifically, the *Administrative Regulations of the People's Republic of China Governing the Registration of Legal Corporations*, issued on June 13, 1988 by the State Council of the PRC, and the *Law of the People's Republic of China of Industrial Enterprises Owned by the Whole People*, effective August 1, 1998, all placed on the record of this investigation, provide that, to qualify as legal persons,

[1] Although the respondents state that the Chamber of Commerce for Medicines and Health Products Importers and Exporters has attempted to prevent dumping through a program that sets a price floor and other conditions for exports of saccharin, the Department preliminarily determines that this program does not require us to deny a separate rate to members of the saccharin industry. As stated above, the Department's separate rate test does not consider, in general, macroeconomic/border-type controls, e.g., export licenses, quotas, and minimum export prices, particularly if these controls are imposed to prevent dumping.

companies must have the ''ability to bear civil liability independently'' and the right to control and manage their businesses. These regulations also state that, as an independent legal entity, a company is responsible for its own profits and losses. In prior cases, the Department has analyzed these laws and regulations and found that they establish an absence of *de jure* control. *See Notice of Final Determination of Sales at Less Than Fair Value: Manganese Metal from the People's Republic of China*, 60 FR 56045, 56046 (November 6, 1995). Thus, we believe that the evidence on the record supports a preliminary finding of an absence of *de jure* governmental control based on: (1) an absence of restrictive stipulations associated with the exporters' business licenses; and (2) the legal authority on the record decentralizing control over respondents.

2. Absence of De Facto Control

The Department typically considers four factors in evaluating whether each respondent is subject to *de facto* governmental control of its export functions: (1) whether the export prices are set by or are subject to the approval of a governmental agency; (2) whether the respondent has authority to negotiate and sign contracts and other agreements; (3) whether the respondent has autonomy from the government in making decisions regarding the selection of management; and (4) whether the respondent retains the proceeds of its export sales and makes independent decisions regarding disposition of profits or financing of losses. *See Silicon Carbide*, 59 FR at 22586–87; and *Notice of Final Determination of Sales at Less Than Fair Value: Furfuryl Alcohol From the People's Republic of China*, 60 FR 22544, 22545 (May 8, 1995). As stated in previous cases, there is some evidence that certain enactments of the PRC central government have not been implemented uniformly among different sectors and/or jurisdictions in the PRC. *See Silicon Carbide*, 56 FR at 22587. Therefore, the Department has determined that an analysis of *de facto* control is critical in determining whether respondents are, in fact, subject to a degree of governmental control which would preclude the Department from assigning separate rates.

Regarding whether each exporter sets its own export prices independent of the government and without the approval of a government authority, each exporter reported that it determines its prices for sales of the subject merchandise. Each exporter stated that it negotiates prices directly with its customers. Also, each exporter claimed that its prices are not subject to review or guidance from any governmental organization. Regarding whether each exporter has authority to negotiate and sign contracts and other agreements, each exporter reported that it has the authority to negotiate and sign contracts and other agreements. Also, each exporter stated that its negotiations are not subject to review or guidance from any governmental organization. There is no evidence on the record to suggest that there is any governmental involvement in the negotiation of contracts.

Regarding whether each exporter has autonomy in making decisions regarding the selection of management, our examination of the record indicates that each exporter reported that it has autonomy in making decisions regarding the selection of management. Also, each exporter claimed that its selection of management is not subject to review or guidance from any governmental organization. There is no evidence on the record to suggest that there is any governmental involvement in the selection of management by the exporters.

Regarding whether each exporter retains the proceeds from its sales and makes independent decisions regarding its disposition of profits or financing of losses, our examination of the record indicates that each exporter reported that it retains the proceeds of its export sales, using profits according to its business needs. Also, each exporter reported that the allocation of profits is determined by its top management. There is no evidence on the record to suggest that there is

any governmental involvement in the decisions regarding disposition of profits or financing of losses.

Therefore, we preliminarily determine that the evidence on the record supports a preliminary finding of *de facto* absence of governmental control based on record statements and supporting documentation showing that: (1) each exporter sets its own export prices independent of the government and without the approval of a government authority; (2) each exporter retains the proceeds from its sales and makes independent decisions regarding disposition of profits or financing of losses; (3) each exporter has the authority to negotiate and sign contracts and other agreements; and, (4) each exporter has autonomy from the government regarding the selection of management.

The evidence placed on the record of this investigation by Suzhou, Shanghai Fortune, and Kaifeng demonstrates an absence of government control, both in law and in fact, with respect to each of the exporter's exports of the merchandise under investigation, in accordance with the criteria identified in *Sparklers* and *Silicon Carbide*. Therefore, for the purposes of this preliminary determination, we are granting separate, company-specific rates to each of these three exporters. The Department will verify information pertaining to our separate rates determinations in the course of verifying the questionnaire responses.

PRC-Wide Rate

As discussed above (*see* ''Separate Rates''), all PRC exporters that do not qualify for a separate rate are treated as a single enterprise; *e.g.*, the PRC-wide entity. As noted above in ''Case History,'' all exporters were given the opportunity to respond to the Department's August 14, 2002, Q&V questionnaire. As explained above, we received timely responses from Suzhou, Shanghai Fortune, and Kaifeng. As noted above in the ''Background'' section, after choosing Suzhou and Shanghai Fortune as mandatory respondents, the Department then provided them with the opportunity to respond to the separate rates portion of the antidumping questionnaire. Subsequently, Suzhou, Shanghai Fortune and, additionally, Kaifeng, responded to this portion of the Department's questionnaire. The Department did not receive Q&V responses, or separate rates information, from Taijin and North Food, the only other companies identified in the Petition.

Since these companies did not respond to our August 14, 2002, Q&V questionnaire, and since information on the record indicates that the value and volume of sales to the United States by the three exporters that did respond to the Department's Q&V is substantially less than the total value and volume of imports from the PRC indicated by Customs data (*see Respondent Selection Memorandum*), we preliminarily determine that subject merchandise is being imported into the United States that is produced by the PRC-wide entity. Because there is no information on the record allowing the calculation of a rate for this entity, the application of facts available is warranted.

Section 776(a)(2) of the Act provides that, if an interested party (A) withholds information requested by the Department, (B) fails to provide such information by the deadline, or in the form or manner requested, (C) significantly impedes a proceeding, or (D) provides information that cannot be verified, the Department shall use,

subject to sections 782(d) and (e) of the Act, facts otherwise available in reaching the applicable determination. Pursuant to this section of the Act, in reaching our preliminary determination, we have used total facts available for the PRC-wide rate because two entities did not respond at all to our questionnaire, nor did the PRC government respond on their behalf, thus failing to provide information and significantly impeding our investigation.

Section 776(b) of the Act provides that, in selecting from among the facts available, the Department may employ adverse inferences if an interested party fails to cooperate by not acting to the best of its ability to comply with requests for information. *See also*, *Statement of Administrative Action* (SAA), accompanying the URAA, H.R. Doc. No. 316, 103rd Cong., 2d. Sess., at 870 (1994). The Department finds that the producers/exporters who did not respond to our request for information (*i.e.*, the PRC-wide entity) have failed to cooperate to the best of their ability. Therefore, the Department preliminarily determines that, in selecting from among the facts available, an adverse inference is appropriate. Consistent with Department practice in cases where a respondent is considered uncooperative, as adverse facts available, we have preliminarily applied 340.80 percent, an average of the highest rates for both products calculated in the Petition, to the PRC-wide entity, including Taijin and North Food. *See, e.g., Notice of Preliminary Determination of Sales at Less Than Fair Value and Postponement of Final Determination: Ferrovanadium from the People's Republic of China Monday*, 67 FR 45088, 45091 (July 8, 2002) (*PRC Ferrovanadium*).

Section 776(c) of the Act provides that, when the Department relies on secondary information rather than on information obtained in the course of an investigation as facts available, it must, to the extent practicable, corroborate that information from independent sources reasonably at its disposal. Secondary information is described in the SAA as ''information derived from the Petition that gave rise to the investigation or review, the final determination concerning subject merchandise, or any previous review under section 751 concerning the subject merchandise.'' *See SAA* at 870. The SAA provides that to ''corroborate'' means simply that the Department will satisfy itself that the secondary information to be used has probative value. *See id*. The SAA also states that independent sources used to corroborate may include, for example, published price lists, official import statistics and Customs data, and information obtained from interested parties during the particular investigation. *See id*. As noted in *Tapered Roller Bearings and Parts Thereof, Finished and Unfinished, from Japan, and Tapered Roller Bearings, Four Inches or Less in Outside Diameter, and Components Thereof, from Japan; Preliminary Results of Antidumping Duty Administrative Reviews and Partial Termination of Administrative Reviews*, 61 FR 57391, 57392 (November 6, 1996), to corroborate secondary information, the Department will, to the extent practicable, examine the reliability and relevance of the information used. *See also, PRC Ferrovanadium*, 67 FR at 45091.

In order to determine the probative value of the initiation margins for use as facts otherwise available for the purposes of this determination, we examined evidence supporting the initiation calculations. Petitioner calculated a range of export prices (EP) for two products, sodium saccharin and calcium saccharin, using an average unit value (AUV) of saccharin imports reported by Customs and price quotes. It subtracted from the price quotes amounts for ocean freight, insurance, brokerage and handling charges and foreign inland freight. *See Petition* at Exhibit 6; and Letter from Petitioner to the Department: Response to Petition Clarifications Questions (July 26, 2002), at Exhibits 1 and 2, for a detailed calculation of these EPs.

We compared the AUV, which is publicly available data, with the price quotes, net expense deductions. For calcium saccharin, the lowest EP was the AUV.[2] For sodium saccharin, the price quotes, before deductions, were lower than the AUV, but the difference was not substantial. *See Preliminary Determination of Saccharin from the People's Republic of China: Analysis and Corroboration of Adverse Facts Available Rate*, Memorandum from Mark Hoadley to the File (December 18, 2002) (*Corroboration Analysis Memorandum*) for specific facts about the comparison. Moreover, the price quotes for sodium saccharin were within the range, even after deductions, of the port-specific AUVs included in the Petition (which were not used in calculating the initiation rates), and the lowest price quote was higher than the lowest AUV. Therefore, we determine that the EP starting prices and deductions submitted in the Petition are corroborated by the fact of their consistency with Customs data.

In calculating NV in the Petition, usage rates were based on public, certified production information submitted by PRC producers in the 1994 investigation. Petitioner provided an affidavit from one of its employees stating his qualifications to perform the calculations, the relevancy to the PRC industry of the type of production process assumed for the calculations, and the reasonableness of the results. We asked petitioner to clarify certain issues regarding its calculations and the usage rates, which it did. *See* Letter from Sally Gannon to petitioner regarding Petition on Saccharin from the People's Republic of China, dated July 23, 2002 and July 26, 2002 submission from petitioner. We compared the usage rates in the Petition to the usage rates reported by both respondents. *See Corroboration Analysis Memorandum*, Attachment 1, for a chart comparing these rates. While there were differences, we did not notice a pattern of figures in the Petition being higher than those reported by respondents. The usage rates in the Petition appear to be comparable to those reported by respondents. For the final determination, we will recheck the usage rates in the Petition in light of any new material timely placed on the record and any information reviewed at verification regarding the production of saccharin in the PRC.

In valuing factors of production for Shanghai and Suzhou, we chose information somewhat different from that used in the Petition. While much of the information is the same (e.g., most values are still taken from Indian import statistics), where this information differed from the information used in the Petition, we used the newer information for purposes of calculating the PRC-wide rate. *See Corroboration Analysis Memorandum*, Attachment 2. Because all of this information is publicly available, and taken from sources used in numerous previous investigations of PRC exports, we determine that it has been corroborated for use in calculating the adverse facts available margin.

This PRC-wide rate applies to all entries of subject merchandise except for entries from Suzhou, Shanghai Fortune, and Kaifeng. Because this is a preliminary margin, the Department will consider all information on the record at the time of the final determination for the purpose of determining the most appropriate final

[2] Petitioner calculated only one AUV, which it applied to both products, presumably because Customs does not have separate tariff classifications for different types of saccharin (*e.g.*, sodium and calcium), and, thus, information on sub-types of saccharin cannot be obtained from the Customs website.

PRC-wide margin. *See Notice of Preliminary Determination of Sales at Less Than Fair Value: Solid Fertilizer Grade Ammonium Nitrate From the Russian Federation*, 65 FR 1139 (January 7, 2000).

Margins for Cooperative Exporters Not Selected

The exporter who responded to Section A of the Department's antidumping questionnaire but was not selected as a respondent in this investigation, Kaifeng, has applied for a separate rate and provided information for the Department to make this determination. Although it is not practicable for the Department to calculate a separate rate for Kaifeng in addition to Suzhou and Shanghai Fortune (*see Respondent Selection Memorandum*, explaining the Department's decision to limit the investigation to two exporters), the company did cooperate in providing all information that the Department requested. For Kaifeng, we have calculated a weighted-average margin based on the rates calculated for those exporters that were selected to participate in this investigation, excluding any rates that are zero, *de minimis*, or based entirely on adverse facts available. *See Notice of Preliminary Determination of Sales at Less Than Fair Value; Honey from the People's Republic of China*, 66 FR 24101, 24104 (May 11, 2001).

Surrogate Country

When the Department is investigating imports from an NME country, section 773(c)(1) of the Act directs it to base NV, in most circumstances, on the NME producer's factors of production, valued in a surrogate market economy country or countries considered to be appropriate by the Department. In accordance with section 773(c)(4) of the Act, the Department, in valuing the factors of production, shall utilize, to the extent possible, the prices or costs of factors of production in one or more market economy countries that: (1) are at a level of economic development comparable to that of the NME country; and, (2) are significant producers of comparable merchandise. The sources of the surrogate factor values are discussed under the NV section below and in *Antidumping Duty Investigation of Saccharin from the People's Republic of China: Factor Valuation*, Memorandum from Brett L. Royce, Case Analyst, through Sally C. Gannon, Program Manager, Office VII, to the File (December 18, 2002) (*Factor Valuation Memorandum*).

The Department has determined that India, Pakistan, Indonesia, Sri Lanka, and the Philippines are countries comparable to the PRC in terms of economic development. *See Antidumping Duty Investigation on Saccharin from the People's Republic of China*, Memorandum from Jeffrey May, Director, Office of Policy, to Sally C. Gannon, Program Manager, Office VII (September 12, 2002). Customarily, we select an appropriate surrogate country based on the availability and reliability of data from the countries that are significant producers of comparable merchandise. For PRC cases, the primary surrogate country has often been India if it is a significant producer of comparable merchandise. In this case, we have found that India is a significant producer of comparable merchandise. *See Antidumping Duty Investigation of Saccharin from the People's Republic of China: Selection of a Surrogate Country*, Memorandum from Brett L. Royce, Case Analyst, through Barbara E. Tillman, Director, Office VII, AD/CVD Enforcement Group III, and, Sally C. Gannon, Program Manager, Office VII, to the File (December 18, 2002) (*Surrogate Country Memorandum*).

We used India as the primary surrogate country, and, accordingly, we have calculated NV using Indian prices to value the PRC producers' factors of production, when available and appropriate. *See Surrogate Country Memorandum*. We have obtained and relied upon publicly available information wherever possible. *See Factor Valuation Memorandum*.

In accordance with section 351.301(c)(3)(I) of the Department's regulations, for the final determination in an antidumping investigation, interested parties may submit publicly available information to value factors of production within 40 days after the date of publication of this preliminary determination.

Date of Sale

Respondents reported contract date, purchase order date, and invoice date as dates of sale. Although the Department maintains a presumption that invoice date is the date of sale (19 CFR § 351.401(I)), ''[i]f the Department is presented with satisfactory evidence that the material terms of sale are finally established on a date other than the date of invoice, the Department will use that alternative date as the date of sale.'' *Antidumping Duties; Countervailing Duties: Final Rule*, 62 FR 27296, 27349 (May 19, 1997) (*Preamble*). After examining the sales documentation placed on the record by respondents, we preliminarily determine that invoice date is the date of sale for all sales by both respondents. These documents, while mentioning at least the proposed transaction price for sales, do not reflect the ''formal negotiation and contracting procedures'' mentioned by the Preamble to the Department's regulations as creating an exception to the invoice date presumption. *Preamble* at 27349. Regarding sales made pursuant to contracts in particular, while the Preamble states that ''date of invoice normally would not be an appropriate date of sale for [long-term] contracts'', there is not enough evidence on the record at this point in time to determine whether the contracts used by respondents in this case establish the material terms of sale to the extent required by our regulations in order to rebut the presumption that invoice date is the proper date of sale. *Id.* at 27350. Specifically, we cannot conclude at this time whether these contracts are actually binding contracts or merely non-binding sales offers. We note that, even in the case of long-term contracts, the Preamble rejects a bright-line rule for date of sale, stating that ''[b]ecause of the unusual nature of long-term contracts, whereby merchandise may not enter the United States until long after the date of contract, the Department will continue to review these situations carefully on a case-by-case basis.§ *Id.* As noted above in the ''Background Section,'' the Department has sent supplemental questionnaires to Suzhou and Shanghai Fortune regarding the issue of date of sale, and we will review more information at verification regarding this issue for both exporters. We will review information regarding the nature and implementation of the contracts, how sales transactions might differ in practice from the written words of the contracts, and how these contracts might have been amended. We will reexamine this issue for the final determination.

Fair Value Comparisons

To determine whether sales of saccharin to the United States by Suzhou and Shanghai Fortune were made at less than fair value, we compared the EP, for Shanghai Fortune, and the constructed export price (CEP), for Suzhou, to NV, as described in the ''Export Price,'' ''Constructed Export Price,'' and ''Normal Value'' sections of this notice. In accordance with section 777A(d)(1)(A)(I) of the Act, we calculated weighted-average EPs and CEPs. With regard to Suzhou, in accordance with section 777A(d)(1)(A)(ii) of the Act, we calculated weighted-average CEPs.

Export Price

For Shanghai Fortune, we based United States price on EP, in accordance with section 772(a) of the Act, because the first sale to an unaffiliated purchaser was made prior to importation, and CEP was not otherwise warranted by the facts on the record. We calculated EP based on prices to the first unaffiliated purchasers in the United States. We made deductions for movement expenses in accordance with section 772(c)(2)(A) of the Act. These included foreign inland freight from the plant to the port of exportation, brokerage and handling, ocean freight and marine insurance.

While Shanghai Fortune has reported its sales on an EP basis, we are examining a potential affiliation issue which could result in treating certain sales as CEP sales. For further details, *see* Letter from Barbara E. Tillman to Shanghai Fortune regarding Antidumping Duty Investigation of Saccharin from the People's Republic of China: Request for Additional Information, dated November 29, 2002; and Letter from Sally Gannon to Shanghai Fortune regarding Antidumping Duty Investigation of Saccharin from the People's Republic of China, dated December 4, 2002. *See also, Investigation of Saccharin from the People's Republic of China for the period of January 1, 2002 through June 30, 2002; Analysis of Affiliation for Shanghai Fortune Chemical Co., Ltd.* (December 18, 2002) (*Affiliation Memorandum*).

Constructed Export Price

For Suzhou, we based United States price on CEP in accordance with section 772(b) of the Act, because the first sale to an unaffiliated purchaser was made after importation into the United States. We calculated CEP based on prices from the U.S. affiliate to the first unaffiliated purchasers in the United States. We deducted the following expenses from the starting price (gross unit price), where applicable: PRC inland freight, international (ocean) freight and insurance, U.S. customs duty, U.S. brokerage and handling, U.S. freight and warehousing, the affiliated purchaser's U.S. credit expenses, and the affiliated purchaser's indirect selling expenses. *See* sections 772(c) and (d) of the Act. Because U.S. customs duty, U.S. brokerage and handling, some freight expenses, credit expenses, and indirect selling expenses are market-economy costs incurred in U.S. dollars, we used actual costs rather than surrogate values when deducting these expenses from gross unit price.

Normal Value

Section 773(c)(1) of the Act provides that the Department shall determine the NV using a factors-of-production methodology if: (1) the merchandise is exported from an NME country; and, (2) the information does not permit the calculation of NV using home-market prices, third-country prices, or constructed value under section 773(a) of the Act.

Factors of production include: (1) hours of labor required; (2) quantities of raw materials employed; (3) amounts of energy and other utilities consumed; and, (4) representative capital costs. We calculated NV based on factors of production, reported by each respondent, for materials, energy, labor, by-products, and packing. Where applicable, we deducted from each respondent's NV the cost of by-products sold during the POI. We valued the majority of input factors using publicly available information as discussed in the ''Surrogate Country'' and ''Factor Valuations'' sections of this notice.

Factor Valuations

The Department normally uses publicly available information to value factors of production. However, in accordance with 19 CFR 351.408(c)(1), the Department's regulations also provide that where a producer sources an input from a market economy and pays for it in market economy currency, the Department may employ the actual price paid for the input to calculate the factors-based NV. *See also, Shakeproof Assembly v. United States*, 268 F. 3d 1376,1379–80 (Fed. Cir. 2001). Suzhou and Shanghai Fortune reported that some of their inputs were purchased from market economies and paid for in a market economy currency. *See Memorandum from Javier Barrientos to the File: Analysis for the Preliminary Determination of Saccharin from the People's Republic of China: Shanghai Fortune (December 18, 2002) (Shanghai Fortune Analysis Memorandum) and Memorandum from Mark Hoadley to the File: Analysis for the Preliminary Determination of Saccharin from the People's Republic of China: Suzhou* (December 18, 2002) (*Suzhou Analysis Memorandum*).

In accordance with section 773(c) of the Act, we calculated NV based on factors of production reported by respondents for the POI. To calculate NV, the reported per-unit factor quantities were multiplied by publicly available Indian surrogate values. In selecting the surrogate values, we considered the quality, specificity, and contemporaneity of the data. As appropriate, we adjusted input prices by including freight costs to make them delivered prices. Specifically, we added surrogate freight costs to Indian import surrogate values using the shorter of the reported distance from the domestic supplier to the factory or the distance from the nearest seaport to the factory. This adjustment is in accordance with the United States Court of Appeals for the Federal Circuit's decision in *Sigma Corp. v. United States*, 117 F. 3d 1401 (Fed. Cir. 1997). For a detailed description of all surrogate values used for respondents, refer to the *Factor Valuation Memorandum*.

Except as noted below, we calculated raw material inputs using the data obtained from the following sources: the *Monthly Trade Statistics of Foreign Trade of India - Volume II - Imports* (*Indian Import Statistics*); the Indian trade publication *Chemical Weekly*; U.S. Department of Commerce data; the *Second Water Utilities Data Book; International Energy Agency* data; and annual reports from National Peroxide Ltd., Calibre Chemicals Pvt. Ltd., and Hindustan Lever Ltd. As appropriate, we adjusted rupee denominated values for inflation using price indices published in the International Monetary Fund's *International Financial Statistics* and excluded taxes. *See Factor Valuation Memorandum*.

We valued some factors depending on the respondent of methanol, sulfur, phthalic anhydride, and freight at the average of the market economy prices actually paid, because these were purchased from market economy countries in meaningful quantities. We disregarded purchase prices of methanol and sulfur from market economy countries that benefitted from non-industry specific export subsidies. For further discussion, please *see Shanghai Fortune Analysis Memorandum* and *Suzhou Analysis Memorandum*.

To value water, we used the average water tariff rate in the Asian Development Bank's *Second Water Utilities Data Book: Asian and Pacific Region*, published in 1997. Because this data was not contemporaneous with the POI, we adjusted the rate for inflation. *See Factor Valuation Memorandum*.

To value electricity, we used the annual report of an Indian chemical producer, National Peroxide Ltd. Because this data was not contemporaneous with the POI, we adjusted the rate for inflation. *See Factor Valuation Memorandum*.

For labor, consistent with section 351.408(c)(3) of the Department's regulations, we used the PRC regression-based wage rate at Import Administration's home page, Import

Library, Expected Wages of Selected NME Countries, revised September 2002 (see http://ia.ita.doc.gov/wages). The source of the wage rate data on the Import Administration's web site can be found in the Yearbook of Labour Statistics 2001, International Labor Office (Geneva: 2001), Chapter 5B: Wages in Manufacturing, and GNP data as reported in World Development Indicators, The World Bank, (Washington, DC (2002)).

To value foreign inland truck freight, we used the seventeen price quotes from six different Indian trucking companies that were used in the *Final Determination of the Antidumping Duty Investigation of Bulk Aspirin From the People's Republic of China*, 65 FR 33805 (May 25, 2000). We then adjusted this value to reflect inflation through the POI. *See Factor Valuation Memorandum*.

To value factory overhead, selling, general and administrative expenses, and profit, we calculated average rates based on financial information from the most recent financial statements of two Indian chemical producers: Calibre Chemicals Pvt. Ltd. and National Peroxide Ltd. *See Factor Valuation Memorandum*.

Currency Conversions

We made currency conversions into U.S. dollars in accordance with section 773A(a) of the Act, based on the exchange rates in effect on the dates of the U.S. sales, as certified by the Federal Reserve Bank.

Verification

As provided in section 782(I)(1) of the Act, we intend to verify all company information relied upon in making our final determination.

Suspension of Liquidation

In accordance with section 733(d) of the Act, we are directing Customs to suspend liquidation of all entries of saccharin from the PRC that are entered, or withdrawn from warehouse, for consumption, on or after the date of publication of this notice in the **Federal Register**. We will instruct Customs to require a cash deposit or the posting of a bond equal to the weighted-average amount by which the NV exceeds the EP or CEP, as indicated below. These suspension-of-liquidation instructions will remain in effect until further notice. The weighted-average dumping margins are as follows:

Manufacturer/Exporter	Margin (percent)
Suzhou Fine Chemical Group Co., Ltd.	231.62%
Shanghai Fortune Chemical Co., Ltd.	74.96%
Kaifeng Xinhua Fine Chemical Factory	197.55%
PRC-Wide	363.22%

Disclosure

The Department will disclose calculations performed within five days of the date of publication of this notice to the parties of the proceedings in this investigation in accordance with 19 CFR 351.224(b).

International Trade Commission Notification

In accordance with section 733(f) of the Act, we have notified the ITC of our determination of sales at LTFV. If our final determination is affirmative, the ITC will determine before the later of 120 days after the date of this preliminary determination or 45 days after our final determination whether these imports are materially injuring, or threatening material injury to, the U.S. industry.

Public Comment

Unless otherwise notified by the Department, case briefs or other written comments may be submitted to the Assistant Secretary for Import Administration no later than fifty days after the date of publication of this notice, and rebuttal briefs, limited to issues raised in case briefs, no later than fifty-five days after the date of publication of this preliminary determination. *See* 19 CFR 351.309(c)(1)(I); 19 CFR 351.309(d)(1). A list of authorities used and an executive summary of issues should accompany any briefs submitted to the Department. This summary should be limited to five pages total, including footnotes. In accordance with section 774 of the Act, we will hold a public hearing, if requested, to afford interested parties an opportunity to comment on arguments raised in case or rebuttal briefs. Tentatively, any hearing will be held fifty-seven days after publication of this notice at the U.S. Department of Commerce, 14th Street and Constitution Avenue, N.W., Washington, D.C. 20230, at a time and location to be determined. Parties should confirm by telephone the date, time, and location of the hearing two days before the scheduled date. Interested parties who wish to request a hearing, or to participate if one is requested, must submit a written request to the Assistant Secretary for Import Administration, U.S. Department of Commerce, Room 1870, within 30 days of the date of publication of this notice. *See* 19 CFR 351.310(c). Requests should contain: (1) the party's name, address, and telephone number; (2) the number of participants; and (3) a list of the issues to be discussed. At the hearing, each party may make an affirmative presentation only on issues raised in that party's case brief, and may make rebuttal presentations only on arguments included in that party's rebuttal brief. *See* 19 CFR 351.310(c). Unless postponed, we will make our final determination no later than 75 days after the date of the preliminary determination.

This determination is issued and published in accordance with sections 733(f) and 777(I)(1) of the Act.

Dated: December 18, 2002.

Bernard T. Carreau,

Acting Assistant Secretary for Import Administration.

[FR Doc. 02–32784 Filed 12–26–02; 8:45 am]

BILLING CODE 3510–DS–S

DEPARTMENT OF COMMERCE

International Trade Administration

[Docket No. 021220324–2324–01]

Special American Business Internship Training Program (SABIT) Grants Funding Availability

AGENCY: International Trade Administration, U.S. Department of Commerce.

ACTION: Notice.

SUMMARY: This Notice announces availability of funds for the Special American Business Internship Training Program (SABIT), for training business executives and scientists (also referred to as ''interns'') from Eurasia (see program description for eligible countries).

DATES: The closing date for applications is March 1, 2003. If available funds are depleted prior to the closing date, a notice to that effect will be published in the **Federal Register**. Processing of complete applications takes approximately three to four months. All awards are expected to be made by July 1, 2003.

ADDRESSES: Request for Applications: Competitive Application kits will be available from ITA starting on the day this notice is published. To obtain a copy of the Application Kit please contact SABIT by: (1) E-mail at *SABITApply@ita.doc.gov,* providing your name, company name and address; (2) Telephone (202) 482–0073; (3) The world wide web at *http.www.mac.doc.gov/sabit/sabit.html;*

(4) Facsimile (202) 482–2443; (5) Mail: Send a written request with two self-addressed mailing labels to Application Request, The SABIT Program, U.S. Department of Commerce, [FCB]—Fourth Floor—4100W, 1401 Constitution Avenue, NW., Washington, DC 20230. The telephone numbers are not toll free numbers. Only one copy of the Application Kit will be provided to each organization requesting it, but it may be reproduced by the requesters.

FOR FURTHER INFORMATION CONTACT: Liesel C. Duhon, Director, SABIT Program, U.S. Department of Commerce, phone—(202) 482–0073, facsimile—(202) 482–2443. These are not toll free numbers.

SUPPLEMENTARY INFORMATION:

Authority: 22 U.S.C. 2395 (b).

Catalog of Federal Domestic Assistance (CFDA): 11.114—Special American Business Internship Training Program.

Program Description: The Department of Commerce, International Trade Administration (ITA) established the SABIT program in September 1990 to assist Eurasia's transition to a market economy. Since that time, SABIT has been supporting U.S. companies that wish to provide business executives and scientists from Eurasia three to six month programs of hands-on training in a U.S. market economy.

Under the SABIT program, qualified U.S. firms will receive funds through a cooperative agreement with ITA to help defray the cost of hosting interns. The training must take place in the United States. ITA will interview Eurasian managers or scientists nominated by participating U.S. companies, or assist in identifying eligible candidates. Interns may be from any of the following countries in Eurasia: Armenia, Azerbaijan, Belarus, Georgia, Kazakhstan, Kyrgyzstan, Moldova, Russia, Tajikistan, Turkmenistan, Ukraine, and Uzbekistan. Please note: Programs with Azerbaijan are subject to the restrictions of Section 907 of the Freedom Support Act of 1992 and waivers: Employees of the Government of Azerbaijan or any of its instrumentalities are excluded from participation and no U.S. participant overseas may work for the Government of Azerbaijan or any of its instrumentalities. However, additional specific restrictions may apply. The U.S. firms will be expected to provide the interns with a hands-on, non-academic, executive training program designed to maximize their exposure to management or commercially-oriented scientific operations. At the end of the training program, interns must return to his/her home country. If there is any evidence of a conflict of interest between the nominated intern and the company, the intern is disqualified.

SABIT exposes Eurasian business managers and scientists to a completely new way of thinking in which demand, consumer satisfaction, and profits drive production. Mid-to-senior-level interns visiting the U.S. for internship programs with public or private sector companies will train in an environment that will provide them with practical knowledge for transforming their countries' enterprises and economies to a free market. The program provides first-hand, eye-opening experience to managers and scientists that cannot be duplicated by American managers traveling to their territories.

Managers: SABIT assists economic restructuring in Eurasia by providing mid-to-senior level business managers with practical training in American methods of innovation and management in such areas as strategic planning, financing, production, distribution, marketing, accounting, wholesaling, and/or labor relations. This first-hand experience in the U.S. economy enables interns to become leaders in establishing and operating a market economy in Eurasia, and creates a unique opportunity for U.S. firms to familiarize key executives from Eurasia with their products and services. Sponsoring U.S. firms will benefit by establishing relationships with key managers in similar industries who are uniquely positioned to assist their U.S. sponsors in doing business in Eurasia.

Scientists: SABIT provides opportunities for gifted scientists to apply their skills to peaceful research and development in the civilian sector, in areas such as defense conversion, medical research, and the environment, and exposes them to the role of scientific research in a market economy where applicability of research relates to business success. Sponsoring firms in the U.S. scientific community also benefit from exchanging information and ideas, and different approaches to new technologies.

All internships are three to six months; however, ITA reserves the right to allow an intern to stay for a shorter period of time (no less than one month) if the U.S. company agrees and the intern demonstrates a need for a shorter internship based on his or her management responsibilities. ITA will reimburse companies for the round trip international travel (coach class tickets) of each intern from the intern's home city in Eurasia to the U.S. internship site, upon submission of the paid travel invoice, payment receipt, or other evidence of payment and the form SF–270, ''Request for Advance or Reimbursement.'' Travel under the program is subject to the Fly America Act. Recipient firms must provide a stipend of $34 per day directly to the interns. Recipient firms will be reimbursed for this stipend, up to a maximum payment for six months, upon the submission of an end-of-internship report and Standard Form SF–270, Request for Advance and/or Reimbursement. Interns must return to their home countries immediately upon completion of their U.S. internships. Recipient firms must provide appropriate housing with a private room for each intern. A market assessment for housing must be provided with the SABIT application, to verify housing costs in the recipient firms' training location(s). This assessment will be used to determine the final award amount granted. Recipient firms will be reimbursed up to $500.00 per month (excluding utilities or telephone services). For cities with higher costs of living, up to $750.00 a month may be reimbursed. Reimbursement will be made upon submission of the end-of-internship report, standard form SF–270, and receipts or other proof of payment of actual housing cost.

In general, each award will have a cap of $13,700 per intern for total cost of airline travel, stipend and housing costs. ITA reserves the right to allow an award to exceed this cap in cases of unusually high costs, specifically airfare from remote regions of Eurasia such as Central Asia and the Caucasus. However, the total reimbursement cannot exceed the award amount. There are no specific matching requirements for the awards. Recipient firms, however, are expected to bear the costs beyond those covered by the award, including: Visa fees, medical insurance, any food and incidentals costs beyond the $34 per day stipend, additional lodging costs beyond the reimbursed amount, any training-related travel within the U.S., training manuals and provision of the hands-on training for the interns. Recipients will be required to submit proof of the interns' medical insurance coverage to the Federal Program Officer before the interns' arrivals. The insurance coverage must include an accident and comprehensive medical insurance program as well as coverage for accidental death, emergency medical evacuation, and repatriation.

U.S. firms wishing to utilize SABIT in order to be matched with an intern without applying for financial assistance may do so. Such firms will be responsible for all costs, including

travel expenses, related to sponsoring the intern. However, prior to acceptance as a SABIT intern, work plans and candidates must be approved by the SABIT Program. Furthermore, program training will be monitored by SABIT staff and evaluated upon completion of training. ITA does not guarantee that it will match Applicants with the profile provided to SABIT.

Funding Availability: Pursuant to section 632(a) of the Foreign Assistance Act of 1961, as amended (the ''Act'') funding to the U.S. Department of Commerce (DOC) for the program will be provided by the United States Agency for International Development (A.I.D.). ITA will award financial assistance and administer the program pursuant to the authority contained in section 635(b) of the Act and other applicable grant rules. The estimated amount of financial assistance available for the program is $1,500,000. Additional funding may become available at a future date.

Matching Requirements: The budget will not include matching requirements, however, recipients are expected to bear the costs beyond $34 per day stipend, additional lodging costs beyond the reimbursed amount, any training-related travel within the U.S., training manuals and provisions of the hands-on training for the interns.

Funding Instrument: Federal assistance will be awarded pursuant to a cooperative agreement between DOC and the recipient firm.

Eligibility Criteria: Eligible applicants for the SABIT program will include all for profit or non-profit U.S. corporations, associations, organizations or other public or private entities located in the United States. Agencies or divisions of the federal government are not eligible. However, state and local governments are eligible.

Award Period: Funds for awards under this program will be available effective with the publication of this notice. The funds will remain available until they are obligated or until the deadline date. Recipient firms will have one year from the date listed on the Financial Assistance Award, CD–450, in order to use the funds. However, DOC reserves the right to allow an extension if the recipient can justify the need for extra time. If applicants incur any costs prior to an award being made, they do solely at their own risk of not being reimbursed by the Government. Notwithstanding any verbal or written assurance that may have been received, there is no obligation on the part of DOC to cover pre-award costs.

Evaluation Criteria: Consideration for financial assistance will be given to those SABIT proposals which provide the following:

(1) Work Plan. Provide a detailed work plan for the intended training. If the company is providing different training plans for different interns, they MUST attach a separate work plan for each. If interns will be trained on the same plan, only one plan needs to be attached. Please note, if you are coordinating an internship which will take place at several companies, you must provide a work plan for each company. The work plan must include: (a) A detailed week-by-week description of internship activities; (b) a description of the intern's duties and responsibilities; (c) complete contact information for the everyday internship coordinator. (This person will be in daily contact with the intern); (d) locations of training within the company, if the internship(s) will be in different divisions; (e) locations of training outside the company. If the intern will spend substantial amounts of time at one or more external companies (over one week) the organization MUST provide a letter from each of those companies, indicating their willingness and ability to provide the planned training. Evaluation Scale: 0–40 points.

(2) Training Objectives Statement. Provide an objective statement, clearly titled ''Training Objectives'' with the company name noted indicating why the organization wishes to provide a professional training experience to a Eurasian manager or scientist. The company must note how the proposed training would further the intent and goals of the SABIT program to provide practical, on-the-job, non-academic, non-classroom training for a professional-level intern. Evaluation Scale: 0–30 points.

(3) Intern Description(s) and Resume(s): Provide descriptions for all the interns requested. This description should note the experience, education, and skills desired in a qualified candidate for the training they intend to provide. If the company wants interns from a specific region or country of Eurasia, it should be indicated in the application. If the company has already nominated candidates for training, they must also attach their resumes. Additionally, they must describe for SABIT the relationship they already maintain with the nominated candidates. Evaluation Scale: 0–15 points.

(4) Financial Resources Documentation: Evidence of adequate financial resources of Applicant organization to cover the costs involved in providing an internship(s). Evidence may include a published annual report, or a letter from the company's outside, independent accountant attesting to the organization's financial ability to support the training program planned and the funds requested or a letter from the organization's bank. All letters must be on the accountant's or bank's letterhead and addressed to the United States Department of Commerce. Evaluation Scale: 0–15 points.

(5) Federal Government Performance Record Statement: Evidence of a satisfactory record of performance in grants, contracts and/or cooperative agreements with the Federal Government, if applicable. (Applicants who are or have been deficient in current or recent performance in their grants, contracts, and/or cooperative agreements with the Federal Government shall be presumed to be unable to meet this requirement). If there is no record to date, the company should indicate this. Evaluation Scale: No points. If applicant has a Federal Government Performance Record Statement, this must be noted as specified in the Application Kit. If not this must be noted as well. Evaluation criteria are listed in decreasing importance. That is, evaluation criterion 1 is most important, followed by criterion 2, *etc.*

Project Funding Priorities: Applicant must indicate involvement in priority business sector(s). While Applicants involved in any industry sector may apply to the program, priority consideration is given to those operating in the following sectors: (a) Agribusiness (including food processing and distribution, and agricultural equipment), (b) Defense conversion, (c) Energy, (d) Environment (including environmental clean-up), (e) Financial services (including banking and accounting), (f) Housing, construction and infrastructure, (g) Medical equipment, supplies, pharmaceuticals, and health care management, (h) Product standards and quality control, (i) Telecommunications, (j) Transportation and (k) Biotechnology.

Priority funding will also be given to applicants applying to host interns from the following countries: Kazakhstan, Kyrgyzstan, Tajikistan, Turkmenistan and Uzbekistan.

Selection Procedures: Each application will receive an independent, objective review by one or more three or four-member independent review panels qualified to evaluate applications submitted under the program. Applications will be evaluated on a competitive, ''rolling'' basis as they are received in accordance with the selection evaluation criteria set forth above. Only after the deadline date

(March 1, 2003) applicants that have received a passing score of 70 or above based on the evaluation criteria weighting will be ranked and awards will be made until funds are depleted. Applicants receiving scores below 70 will not be considered. ITA reserves the right to limit the award amount as well as the number of interns per applicant. The final selecting official reserves the right to choose or recommend recipients based on U.S. geographic location, organization size as well as priority business sectors and country priorities (listed in Project Funding Priorities, above) and past performance, when making awards. Recipients may be eligible, pursuant to approval of an amendment of an active award, to host additional interns under the program. The Director of the SABIT Program is the final selecting official for each award.

Intergovernmental Review: Applications under this program are not subject to Executive Order 12372, ''Intergovernmental Review of Federal Programs.''

Application Forms and Kit: To obtain an application kit, please refer to the section above marked **ADDRESSES**. All applicants must submit a completed Standard Form 424, ''Application for Federal Assistance'' and a Standard Form 424B, ''Assurances—Non-Construction Programs.'' All applicants must also submit a completed Form CD–511, ''Certifications Regarding Debarment, Suspension and Other Responsibility Matters; Drug-Free Workplace Requirements and Lobbying''. Form CD–511 and Standard Forms 424 and 424B are included in the Application Kit supplied by the SABIT office. Applicants will also need to provide the information to fulfill the ''Evaluation Criteria'' listed above. Please note: Applications must be submitted according to the detailed instructions in the SABIT Application Kit. Incomplete applications may be immediately returned unreviewed via regular U.S. mail.

An original and two copies of the application (including Standard Form 424 (Rev. 4–92) and supplemental material) are to be sent to the address designated in the Application Kit and postmarked no later than the closing date. Please sign the original application (including forms) with blue ink.

Additional Information: Applicants must also submit: (1) Basic Applicant Information Form, (2) Eurasian Intern Request Form, (3) Guarantees and Acknowledgments Form, (4) Bureau of Industry and Security (BIS) Statement (BIS is formerly the Bureau of Export Administration (BXA), (5) Market Survey for Housing.

Disposition of Unsuccessful Applications: Unsuccessful applications may be retained by the SABIT Program.

Other Requirements: Department of Commerce Pre-Award Notification Requirements for Grants and Cooperative Agreements, which are contained in **Federal Register** Notice of October 1, 2001 (66 FR 49917), as amended by the Notice published on October 30, 2002 (67 FR 66109), are applicable.

All applicants are advised of the following:

1. Participating companies will be required to comply with all relevant U.S. tax and export regulations. Export controls may relate not only to licensing of products for export, but also to technical data transfer. The U.S. Department of Commerce's Bureau of Industry and Security (BIS formerly BXA, the Bureau of Export Administration) reviews applications in question to determine whether export licenses are required. SABIT will not award a grant until the export license issue has been satisfied.

2. The following statutes apply to this program: Section 907 of the FREEDOM Support Act, Pub. L. 102–511, 22 U.S.C. 5812 note (Restriction on Assistance to the Government of Azerbaijan); Pub. L. 107–115 (Waiver of Section 907 of the Freedom Support Act); 7 U.S.C. ''5201 *et seq.* (Agricultural Competitiveness and Trade—the Bumpers Amendment); The Foreign Assistance Act of 1961, as amended, including Chapter 11 of Part I, section 498A(b), Pub. L. 102–511, 22 U.S.C. 2295a(b) (regarding ineligibility for assistance); 22 U.S.C. 2420(a), Section 660(a) of The Foreign Assistance Act of 1961, as amended (Police Training Prohibition); and provisions in the annual Foreign Operations, Export Financing, and Related Programs Appropriations Acts, concerning impact on jobs in the United States (see, *e.g.*, 536 of Pub. L. 106–113).

3. The collection of information is approved by the Office of Management and Budget, OMB Control Number 0625–0225. Public reporting for this collection of information is estimated to be three hours per response, including the time for reviewing instructions, and completing and reviewing the collection of information. All responses to this collection of information are voluntary, and will be protected from disclosure to the extent allowed under the Freedom of Information Act. The use of Standard Forms 424 and 424B is approved under OMB Control Numbers 0348–0043 and 0348–0040, respectively.

Notwithstanding any other provision of law, no person is required to respond to nor shall a person be subject to the requirements of the Paperwork Reduction Act unless that collection of information displays a currently valid OMB Control Number. Send comments regarding the burden estimate or any other aspect of this collection of information, including suggestions for reducing this burden, to the Reports Clearance Officer, International Trade Administration, Department of Commerce, Room 4001, 14th and Constitution Ave., NW., Washington, DC 20230.

4. *Executive Order 12866:* It has been determined that this notice is not significant for purposes of E.O. 12866.

5. *Executive Order 13132:* It has been determined that this notice does not contain policies with Federalism implications as that term is defined in E.O. 13132.

6. *Administrative Procedure Act/ Regulatory Flexibility Act:* Because notice and comment are not required under 5 U.S.C. 553, or any other law, for notices relating to public property, loans, grants, benefits or contracts (5 U.S.C. 553(a)), a Regulatory Flexibility Analysis is not required and has not been prepared for this notice, 5 U.S.C. 601 *et seq.*

Dated: December 20, 2002.

Liesel C. Duhon,

Director, SABIT Program.

[FR Doc. 02–32689 Filed 12–26–02; 8:45 am]

BILLING CODE 3510–HE–P

DEPARTMENT OF COMMERCE

International Trade Administration

Overseas Trade Missions

AGENCY: International Trade Administration, Department of Commerce.

ACTION: Notice.

SUMMARY: The Department of Commerce invites U.S. companies to participate in the below listed overseas trade missions. For a more complete description, obtain a copy of the mission statement from the Project Officer indicated below.

Information and Communication Technology Trade Mission

Toronto, Canada, February 18–20, 2003, recruitment closes on January 20, 2003.

For further information contact: Ms. Viktoria Palfi, U.S. Department of Commerce, telephone 416–595–5412,

ext. 229, or e-mail to *viktoria.palfi @mail.doc.gov.*

U.S. Building Products Trade Mission

Toronto and Montreal, Canada, March 4–7, 2003, Recruitment closes on January 24, 2003.

For further information contact: Ms. Rita Patlan, U.S. Department of Commerce, telephone 416–595–5412, ext. 223, or e-mail to *rita.patlan@mail.doc.gov.*

Textile and Apparel Fabric Trade Mission to Mexico, Honduras, and Guatemala

Guadalajara, San Pedro Sula, and Guatemala City, March 30–April 6, 2003, recruitment closes on February 20, 2003.

For further information contact: Mr. Andrew Gelfuso, U.S. Department of Commerce, telephone 202–482–2043, or e-mail to *andrew.gelfuso@mail.doc.gov.*

Healthcare Technologies Seminar and Trade Mission

Montreal and Toronto, Canada, April 7–10, 2003, recruitment closes on February 28, 2003.

For further information contact: Mr. Pierre Richer, U.S. Department of Commerce, telephone 514–398–9695, ext. 2261, or e-mail to *pierre.richer@mail.doc.gov.*

Executive Aerospace Trade Mission to Australia and New Zealand

Canberra, Brisbane, Melbourne, and Auckland, April 27–May 6, 2003, recruitment closes on March 31, 2003.

For further information contact: Mr. Sean McAlister, U.S. Department of Commerce, telephone 202–482–6239, or e-mail to *sean.mcalister@mail.doc.gov.*

Safety and Security Trade Mission to Brazil

Rio de Janeiro and Sao Paulo, May 19–23, 2003, recruitment closes on March 31, 2003.

For further information contact: Mr. Howard Fleming, U.S. Department of Commerce, telephone 202–482–5163, or e-mail to *howard.fleming@mail.doc.gov* or in Brazil, Mr. Jim Cunningham, U.S. Consulate, Rio de Janeiro, telephone 55–21–2220–1059, or e-mail to *jim.cunningham@mail.doc.gov.*

RepCan 2003

Toronto, Canada, June 17–18, 2003, recruitment closes on April 26, 2003.

For further information contact: Ms. Madellon C. Lopes, U.S. Department of Commerce, telephone 416–595–5412, ext. 227, or e-mail to *madellon.lopes@mail.doc.gov.*

Recruitment and selection of private sector participants for these trade missions will be conducted according to the Statement of Policy Governing Department of Commerce Overseas Trade Missions dated March 3, 1997.

For further information contact Mr. Thomas Nisbet, U.S. Department of Commerce, telephone 202–482–5657, or e-mail *Tom_Nisbet@ita.doc.gov.*

Dated: December 20, 2002.

Thomas H. Nisbet,

Director, Export Promotion Coordination, Office of Planning, Coordination and Management.

[FR Doc. 02–32691 Filed 12–26–02; 8:45 am]

BILLING CODE 3510–DR–P

DEPARTMENT OF COMMERCE

National Oceanic and Atmospheric Administration

[I.D. 121902D]

Proposed Information Collection; Comment Request; Highly Migratory Species Tournament Registration and Reporting

AGENCY: National Oceanic and Atmospheric Administration (NOAA).

ACTION: Notice.

SUMMARY: The Department of Commerce, as part of its continuing effort to reduce paperwork and respondent burden, invites the general public and other Federal agencies to take this opportunity to comment on proposed and/or continuing information collections, as required by the Paperwork Reduction Act of 1995, Pub. L. 104–13 (44 U.S.C. 3506 (c)(2)(A)).

DATES: Written comments must be submitted on or before February 25, 2003.

ADDRESSES: Direct all written comments to Diana Hynek, Departmental Paperwork Clearance Officer, Department of Commerce, Room 6625, 14th and Constitution Avenue NW, Washington DC 20230 (or via Internet at *dHynek@doc.gov*).

FOR FURTHER INFORMATION CONTACT: Requests for additional information or copies of the information collection instrument and instructions should be directed to Christopher Rogers, Chief, Highly Migratory Species Management Division (F/SF1), Office of Sustainable Fisheries, National Marine Fisheries Service (NMFS), 1315 East-West Highway, Silver Spring, MD 20910; (301) 713–2347.

SUPPLEMENTARY INFORMATION:

I. Abstract

NMFS would require that operators of fishing tournaments involving Highly Migratory Species (HMS) provide advance identification of the tournament and then provide information after the tournament on the HMS that are caught, whether they were kept or released, the length and weight of the fish, and other information. Most of the data required for post-tournament reporting are already collected in the routine course of tournament operations. The data collected are needed by NMFS to estimate the total annual catch of these species and to evaluate the impact of tournament fishing in relation to other types of fishing.

II. Method of Collection

There are two required reporting forms, one to register a tournament and another to provide a summary report the results of the tournament. Completed forms are mailed to NMFS.

III. Data

OMB Number: 0648–0323.

Form Number: None.

Type of Review: Regular submission.

Affected Public: Business or other for-profit organizations, and not-for-profit institutions.

Estimated Number of Respondents: 300.

Estimated Time Per Response: 2 minutes for a registration form; and 20 minutes for a tournament summary report.

Estimated Total Annual Burden Hours: 110.

Estimated Total Annual Cost to Public: $108.

IV. Request for Comments

Comments are invited on: (a) whether the proposed collection of information is necessary for the proper performance of the functions of the agency, including whether the information shall have practical utility; (b) the accuracy of the agency's estimate of the burden (including hours and cost) of the proposed collection of information; (c) ways to enhance the quality, utility, and clarity of the information to be collected; and (d) ways to minimize the burden of the collection of information on respondents, including through the use of automated collection techniques or other forms of information technology.

Comments submitted in response to this notice will be summarized and/or included in the request for OMB approval of this information collection; they also will become a matter of public record.

Dated: December 19, 2002.

Gwellnar Banks,

Management Analyst, Office of the Chief Information Officer.

[FR Doc. 02–32621 Filed 12–26–02; 8:45 am]

BILLING CODE 3510–22–S

DEPARTMENT OF COMMERCE

National Oceanic and Atmospheric Administration

ENVIRONMENTAL PROTECTION AGENCY

Coastal Nonpoint Pollution Control Program: Approval Decision on Wisconsin Coastal Nonpoint Pollution Control Program

AGENCY: National Oceanic and Atmospheric Administration, U.S. Department of Commerce, and U.S. Environmental Protection Agency.

ACTION: Notice of intent to approve the Wisconsin coastal nonpoint program.

SUMMARY: Notice is hereby given of the intent to fully approve the Wisconsin Coastal Nonpoint Pollution Control Program (coastal nonpoint program) and of the availability of the draft Approval Decisions on conditions for the Wisconsin coastal nonpoint program. Section 6217 of the Coastal Zone Act Reauthorization Amendments (CZARA), 16 U.S.C. 1455b, requires States and territories with coastal zone management programs that have received approval under section 306 of the Coastal Zone Management Act to develop and implement coastal nonpoint programs. Coastal States and territories were required to submit their coastal nonpoint programs to the National Oceanic and Atmospheric Administration (NOAA) and the U.S. Environmental Protection Agency (EPA) for approval in July 1995. NOAA and EPA conditionally approved the Wisconsin coastal nonpoint program on September 24, 1997. NOAA and EPA have drafted approval decisions describing how Wisconsin has satisfied the conditions placed on its program and therefore has a fully approved coastal nonpoint program.

NOAA and EPA are making the draft decisions for the Wisconsin coastal nonpoint program available for a 30-day public comment period. If comments are received, NOAA and EPA will consider whether such comments are significant enough to affect the decision to fully approve the program.

Copies of the draft Approval Decisions can be found on the NOAA website at *http://www.ocrm.nos.noaa.gov/czm/* or may be obtained upon request from: Helen Farr. Coastal Programs Division (N/ORM3), Office of Ocean and Coastal Resource Management, NOS, NOAA, 1305 East-West Highway, Silver Spring, Maryland 20910, phone (301) 713–3155, x150, email *helen,farr@noaa.gov*.

DATES: Individuals or organizations wishing to submit comments on the draft Approval Decisions should so by January 27, 2003.

ADDRESSES: Comments should be made to: John King. Acting Chief, Coastal Programs Division (N/ORM3), Office of Ocean and Coastal Resource Management, NOS, NOAA, 1305 East-West Highway, Silver Spring, Maryland 20910, phone (301) 713–3155, x188, email *john.king@noaa.gov*.

FOR FURTHER INFORMATION CONTACT: Helen Farr, Coastal Programs Division (N/ORM3), Office of Ocean and Coastal Resource Management, NOS, NOAA, 1305 East-West Highway, Silver Spring, Maryland 20910, phone (301) 713–3155, x150, email *helen.farr@noaa.gov*.

Dated: December 20, 2002.

Alan Neuschatz,

Associate Assistant Administrator, Management and Budget Office, National Ocean Service, National Oceanic and Atmospheric Administration.

G. Tracy Mehan, III,

Assistant Administrator, Office of Water, Environmental Protection Agency.

[FR Doc. 02–32799 Filed 12–26–02; 8:45 am]

BILLING CODE 3510–08–M

DEPARTMENT OF COMMERCE

National Oceanic and Atmospheric Administration

Notice of Public Meeting

ACTION: Notice of public meeting.

SUMMARY: The Advisory Committee on Commercial Remote Sensing (ACCRES) will meet January 14, 2003.

DATE AND TIME: The meeting is scheduled as follows: January 14, 2003, 8:30 a.m.–5 p.m. The first part of this meeting will be closed to the public. The public portion of the meeting will begin at 1 p.m.

ADDRESSES: The meeting will be held at Washington Office of the RAND Corporation. RAND is located at 1200 South Hayes Street, Arlington, Virginia. It is located above the Pentagon City Metro station, which is served by both the blue and yellow lines. While open to the public, seating capacity may be limited.

SUPPLEMENTARY INFORMATION: As required by section 10(a) (2)of the Federal Advisory Committee Act, 5 U.S.C. App. (1982), notice is hereby given of the meeting of ACCRES. ACCRES was established by the Secretary of Commerce (Secretary) on May 21, 2002, to advise the Secretary through the Under Secretary of Commerce for Oceans and Atmosphere on long- and short-range strategies for the licensing of commercial remote sensing satellite systems.

Matters To Be Considered

The first part of the meeting will be closed to the public pursuant to Section 10(d) of the Federal Advisory Committee Act, 5 U.S.C. App. 2, as amended by Section 5(c) of the Government in Sunshine Act, Public Law 94–409 and in accordance with Section 552b(c)(1) of Title 5, United States Code, that the portions of this meeting which involve briefings on the ongoing review and implementation of commercial space policy relating to the National Security Presidential Directive-15 and the national security and foreign policy considerations for NOAA's licensing decisions may be closed to the public. These briefings are likely to disclose matters that are specifically authorized under criteria established by Executive Order 12958 to be kept secret in the interest in the interest of national defense or foreign policy and are in fact properly classified pursuant to such Executive Order.

All other portions of the meeting will be open to the public. During the open portion of the meeting, the Committee will receive briefings on and discuss key issues such as market development, foreign legal approaches and commercial availability, and NOAA licensing practices and procedures.

Special Accommodations

These meetings are physically accessible to people with disabilities. Requests for special accommodations may be directed to ACCRES, NOAA/NESDIS International and Interagency Affairs Office, 1335 East-West Highway, Room 7311, Silver Spring, Maryland 20910.

Additional Information and Public Comments

Any member of the public wishing further information concerning the meeting or who wishes to submit oral or written comments should contact Timothy Stryker, Designated Federal Officer for ACCRES, NOAA/NESDIS International and Interagency Affairs Office, 1335 East-West Highway, Room 7311, Silver Spring, Maryland 20910.

Copies of the draft meeting agenda can be obtained from Tahara Moreno at (301) 713–2024 ext. 202, fax (301) 713–2032, or e-mail *Tahara.Moreno@noaa.gov.*

The ACCRES expects that public statements presented at its meetings will not be repetitive of previously-submitted oral or written statements. In general, each individual or group making an oral presentation will be limited to a total time of five minutes. Written comments (please provide at least 13 copies) received in the NOAA/NESDIS International and Interagency Affairs Office on or before January 9, 2003, will be provided to Committee members in advance of the meeting. Comments received too close to the meeting date will normally be provided to Committee members at the meeting.

FOR FURTHER INFORMATION CONTACT: Timothy Stryker, NOAA/NESDIS International and Interagency Affairs, 1335 East West Highway, Room 7311, Silver Spring, Maryland 20910; telephone (301) 713–2024 x205, fax (301) 713–2032, e-mail *Timothy.Stryker@noaa.gov,* or Douglas Brauer at telephone (301) 713–2024 x213, e-mail *Douglas.Brauer@noaa.gov.*

Gregory W. Withee,

Assistant Administrator for Satellite and Information Services.

[FR Doc. 02–32661 Filed 12–19–02; 10:08 am]

BILLING CODE 3510–HR–P

DEPARTMENT OF COMMERCE

National Oceanic and Atmospheric Administration

[I.D. 122002A]

North Pacific Fishery Management Council; Public Meeting

AGENCY: National Marine Fisheries Service (NMFS), National Oceanic and Atmospheric Administration (NOAA), Commerce.

ACTION: Notice of committee meeting.

SUMMARY: The North Pacific Fishery Management Council's (Council) Crab Rationalization Community Protection Committee will meet in Anchorage, AK.

DATES: The meeting will be held on January 8–9, 2003.

ADDRESSES: The meeting will be held at the Hilton Anchorage Hotel, 500 W 3rd Avenue, Fireweed Room, Anchorage, AK 99501.

Council address: North Pacific Fishery Management Council, 605 W. 4th Ave., Suite 306, Anchorage, AK 99501–2252.

FOR FURTHER INFORMATION CONTACT: Mark Fina, NPFMC, 907–271–2809.

SUPPLEMENTARY INFORMATION: The meeting will begin at 9 a.m. on Wednesday, January 8, continue through Thursday, January 9.

The purpose of this meeting will be to review and discuss options to ensure protection of coastal community interests within the recently approved Bering Sea Aleutian Island crab rationalization program.

Although non-emergency issues not contained in this agenda may come before this group for discussion, those issues may not be the subject of formal action during this meeting. Action will be restricted to those issues specifically identified in this notice and any issues arising after publication of this notice that require emergency action under section 305(c) of the Magnuson-Stevens Fishery Conservation and Management Act, provided the public has been notified of the Council's intent to take final action to address the emergency.

Special Accommodations

These meetings are physically accessible to people with disabilities. Requests for sign language interpretation or other auxiliary aids should be directed to Gail Bendixen, 907–271–2809, at least 5 working days prior to the meeting date.

Dated: December 20, 2002.

John H. Dunnigan,

Director, Office of Sustainable Fisheries, National Marine Fisheries Service.

[FR Doc. 02–32618 Filed 12–26–02; 8:45 am]

BILLING CODE 3510–22–S

DEPARTMENT OF DEFENSE

Office of the Secretary

Proposed Collection; Comment Request

AGENCY: Office of the Assistant Secretary of Defense (Health Affairs)/TRICARE Management Activity, DoD.

ACTION: Notice of new survey project.

SUMMARY: This notice is to advise interested parties of a Military Health System (MHS) new survey project entitled, TRICARE Employee Survey. In accordance with Section 3506(c)(2)(A) of the Paperwork Reduction Act of 1995, the Office of the Assistant Secretary of Defense for Health Affairs announces a proposed new public information collection and seeks public comment on the provisions thereof. Comments are invited on: (a) Whether the proposed new collection of information is necessary for the proper performance of the functions of the agency, including whether the information shall have practical utility; (b) the accuracy of the agency's estimate of the burden of the information collection; (c) ways to enhance the quality, utility, and clarity of the information to be collected; and (d) ways to minimize the burden of the information collection on respondents, including through the use of automated collection techniques or other forms of information technology.

DATES: Consideration will be given to all comments received by February 25, 2003.

ADDRESSES: Written comments and recommendations on the information collection should be sent to LTC (P) Merrily MeGowan, Ph.D., M.S., U.S.A.; TRICARE Management Activity; HPA&E; 5111 Leesburg Pike, Suite 810 Falls Church, VA 22041.

FOR FURTHER INFORMATION CONTACT: To request more information on this proposed information collection, please write to the above address.

Title; Associated Form; and OMB Number: TRICARE Employee Survey (TRES)

Needs and Uses: the objective of this work is to provide the Department of Defense leadership with feedback from civilian and Military Healthcare System employees who work at Military Treatment Facilities (MTF) CONUS-wide. A supportive internal environment enhances employee performance, motivation, and commitment, which in turn enhance the quality of delivered healthcare. Understanding the level of employee commitment and employees' attitudes toward the things that drive that commitment will help identify organizational factors needing improvement. The goal of this work is to gain insight from MHS employees working within the direct care system about their attitudes, experiences and opinions of workplace structures and procedures. All employees of CONUS MTFs will be eligible to participate. By reporting on their experience with, and perceptions of, their organization and immediate work environment, they can identify factors that enable or hinder them from providing high quality care. The TRES intended to provide DoD with data that contributes to the delivery of high quality healthcare. The perspective of employees has not been collected systematically despite their important role in delivering care within the constraints of limited resources and complicated guidelines. The first goal of this work is to gain insight of employees regarding the challenges associated with treating patients under TRICARE. A

survey instrument is needed that will capture information regarding employee opinions of how well TRICARE supports them to provide patients with needed care. It will identify how administrative policies and practices of TRICARE health plans effect healthcare delivery. A second goal of this work is to collect information that indicates how the attitudes and opinions of employees differ by specialty, region, and degree of participation with TRICARE. The survey data shall provide information needed to better plan, deliver, and evaluate health care services provided in the military health system (MHS).

Affected Public: Individual households (TRICARE Employees CONUS-wide).

Annual Burden Hours: 333 hours.

Number of Respondents: 1,000.

Response Per Respondent: 1.

Average Burden Per Response: .333 hrs.

Frequency: Once.

SUPPLEMENTARY INFORMATION: This request encompasses all activities required to conduct and develop a report of findings of a confidential survey of TRICARE employees CONUS-wide to assess their attitudes and opinions regarding their ability to provide high quality care.

Dated: November 16, 2002.

Patricia L. Toppings,

Alternate OSD Federal Register Liaison Officer Department of Defense.

[FR Doc. 02–32668 Filed 12–26–02; 8:45 am]

BILLING CODE 5001–08–M

DEPARTMENT OF DEFENSE

Office of the Secretary

Meeting of the Defense Department Advisory Committee on Women in the Services (DACOWITS)

AGENCY: Department of Defense.

ACTION: Notice.

SUMMARY: Pursuant to Section 10(a), Public Law 92–463, as amended, notice is hereby given of a forthcoming of the Defense Department Advisory Committee on Women in the Services (DACOWITS). The purpose of the Committee meeting is to provide further training to the incoming FY 2003 Committee members on issues they will review this year. The meeting is open to the public, subject to the availability of space.

DATES: January 16 & 17, 2003, 8:30 a.m.–5:30 p.m.

ADDRESSES: Courtyard Marriott, 2899 Jefferson Davis Hwy, Arlington, VA 22202.

FOR FURTHER INFORMATION CONTACT: Lieutenant Commander Shannon Thaeler, USN, DACOWITS, 4000 Defense Pentagon, Room 3D769, Washington, DC 20301–4000. Telephone (703) 697–2122.

SUPPLEMENTARY INFORMATION: Interested persons may submit a written statement for consideration by the Committee and make an oral presentation of such. Persons desiring to make an oral presentation or submit a written statement to the Committee must notify the point of contact listed below no later than noon, January 10, 2003. Oral presentations by members of the public will be permitted only on Friday, January 17, 2003, from 5:15 p.m. to 5:30 p.m. before the full Committee. Presentations will be limited to two minutes. Number of oral presentations to be made will depend on the number of requests received from members of the public. Each person desiring to make an oral presentation must provide the point of contact listed below with one (1) copy of the presentation by noon, January 10, 2003 and bring 50 copies of any material that is intended for distribution at the meeting. Persons submitting a written statement only must submit one (1) copy of the statement to the DACOWITS staff by the close of the meeting on January 17, 2003.

Meeting Agenda

Thursday, January 16, 2003

Welcome, Administrative Remarks
Panel: National Guard Bureau, United States Marine Corps, United States Coast Guard
Q & A Session
Army Transformation Briefing
Navy Transformation Briefing
Lunch (Invited Guests Only)
Air Force Transformation Briefing
Army Well-Being Briefing
Navy Family Summit Briefing
Coast Guard Temporary Separation Program
Committee time

Friday, January 17, 2003

Readiness Panel (Participants TBD)
Defense Manpower Data Center Briefing
Health Care Briefing
Lunch (Invited Guests Only)
RAND Briefing
Navy Personnel Research, Study and Technologies
Army Research Institute Briefing
Committee time
Public forum (5:15 p.m.–5:30 p.m.)

Dated: December 19, 2002.

Patricia L. Toppings,

Alternate OSD Federal Register Liaison Officer, Department of Defense.

[FR Doc. 02–32670 Filed 12–26–02; 8:45 am]

BILLING CODE 5001–08–M

DEPARTMENT OF DEFENSE

Department of the Army

Notice of Availability (NOA) of the Final Environmental Impact Statement (FEIS) for the Destruction of Chemical Agents and Munitions at Blue Grass Army Depot, KY

AGENCY: Department of the Army, DoD.

ACTION: Notice of availability.

SUMMARY: This announces the availability of the FEIS that assesses the potential environmental impacts of the design, construction, operation and closure of a facility to destroy the chemical agents and munitions currently stored at the Blue Grass Army Depot (BGAD). The FEIS examines the potential environmental impacts of the following destruction facility alternatives: (1) Baseline incineration facility; (2) neutralization followed by supercritical water oxidation; (3) neutralization followed by supercritical water oxidation and gas phase chemical reduction; (4) electrochemical oxidation; and (5) no action (i.e., continued storage of chemical munitions at BGAD). Although the no action alternative is not viable under Pub. L. 990145 (DoD Authorization Act of 1986), it was analyzed to provide a comparison with the proposed action. The FEIS identifies pilot testing of neutralization followed by supercritical water oxidation as the agency's preferred alternative for destruction of chemical munitions at BGAD.

DATES: The waiting period for the FEIS will end 30 days after publication of the NOA in the **Federal Register** by the U.S. Environmental Protection Agency.

ADDRESSES: To obtain copies of the FEIS, contact the Program Manager for Chemical Demilitarization, Public Outreach and Information Office (ATTN: Mr. Gregory Mahall), Building E–4585, Aberdeen Proving Ground, Maryland 21010–4005.

FOR FURTHER INFORMATION CONTACT: Mr. Gregory Mahall at 410–436–1093, by fax at 410–436–5122, by mail at the above listed address or by electronic mail at *gregory.mahall@pmcd.apgea.army.mil.*

SUPPLEMENTARY INFORMATION: In its Record of Decision (ROD) on February 26, 1988 (53 FR 5816, February 26, 1988) for the Final Programmatic

Environmental Impact Statement on the Chemical Stockpile Disposal Program (CSDP), the Army selected on-site disposal by incineration at all eight chemical munition storage sites located within the continental United States as the method by which it will destroy its lethal chemical stockpile. The Army published a Notice of Intent in the **Federal Register** (65 FR 20140–41, December 4, 2000) which provided notice that, pursuant to the National Environmental Policy Act and implementing regulations, it was preparing a draft site-specific EIS for the Blue Grass Chemical Agent Disposal Facility. The Army published a Draft EIS to assess the site-specific health and environmental impacts of on-site disposal of the chemical agents and munitions stored at the BGAD on May 31, 2002. All public comments received on the DEIS have been addressed in the FEIS.

The Program Manager for Assembled Chemical Weapons Assessment (ACWA) prepared a separate EIS. The ACWA EIS is for follow-on pilot testing of the ACWA Program pursuant to the process established by Congress in Pub. L. 104–208 and 105–261. The ACWA EIS emphasizes the feasibility of pilot testing one or more of the ACWA technologies at one or more sites. One of the four sites evaluated in the ACWA EIS was the BGAD. Information provided by the ACWA Program concerning the neutralization technologies provided the basis for analysis of the neutralization technologies and comparison with incineration in this site-specific EIS for stockpile destruction at Blue Grass. This site-specific EIS and the ACWA EIS serve complementary purposes.

The decision for the technology to be implemented to destroy the chemical weapons stockpile at BGAD will be made by the DAE and a ROD will be signed following the end of the 30-day waiting period.

Dated: December 19, 2002.

Richard E. Newsome,

Acting Deputy Assistant Secretary of the Army (Environment, Safety and Occupational Health) OASA (I&E).

[FR Doc. 02–32669 Filed 12–26–02; 8:45 am]

BILLING CODE 3710–08–M

DEPARTMENT OF EDUCATION

[CFDA No. 84.116J]

Fund for the Improvement of Postsecondary Education—Special Focus Competition: European Community-United States of America Cooperation Program in Higher Education and Vocational Education and Training; Notice Inviting Applications for New Awards for Fiscal Year (FY) 2003

Purpose of Program: To provide grants or enter into cooperative agreements to improve postsecondary education opportunities by focusing on problem areas or improvement approaches in postsecondary education.

Eligible Applicants: Institutions of higher education and vocational education and training or combinations of institutions and other public and private nonprofit educational institutions and agencies.

Applications Available: December 20, 2002.

Deadline for Transmittal of Applications: March 28, 2003.

Deadline for Intergovernmental Review: May 30, 2003.

Estimated Available Funds: $700,000 in fiscal year 2003; $2,370,000 over three years. The estimated amount of funds available for awards is based on the Administration's request for this program for FY 2003. The actual level of funding, if any, depends on final Congressional action. However, we are inviting applications to allow enough time to complete the grant process if Congress appropriates funds for this program.

Estimated Range of Awards: $25,000–$200,000 total for up to three years.

Estimated Average Size of Awards: $25,000 for one-year preparatory projects; $35,000 for one-year complementary activities projects; $75,000 for two-year complementary activities projects; $50,000 for year one of a three-year consortia implementation project with a $200,000 three-year total.

Estimated Number of Awards: 13.

Note: The Department is not bound by any estimates in this notice.

Project Period: Up to 36 months.

Applicable Regulations: The Education Department General Administrative Regulations (EDGAR) in 34 CFR parts 74, 75, 77, 79, 80, 82, 85, 86,97, 98, and 99.

SUPPLEMENTARY INFORMATION: Under the Special Focus Competition, we will award grants or enter into cooperative agreements that focus on problem areas or improvement approaches in postsecondary education. We have included an invitational priority to encourage proposals designed to support the formation of educational consortia of institutions and organizations in the United States and the European Union to encourage cooperation in the coordination of curricula, the exchange of students and the opening of educational opportunities between the United States and the European Union. The invitational priority is issued in cooperation with the European Union. European institutions participating in any consortium proposal responding to the invitational priority may apply to the European Commission's Directorate General for Education and Culture for additional funding under a separate European competition.

Priority: The Secretary is particularly interested in applications that meet the following invitational priority. However, an application that meets this invitational priority does not receive competitive or absolute preference over other applications (34 CFR 75.105(c)(1)).

Invitational Priority: Projects that support consortia of institutions of higher education that promote institutional cooperation and student mobility between the United States and the Member States of the European Union.

Methods for Applying Selection Criteria

The Secretary gives equal weight to the listed criteria. Within each of the criteria, the Secretary gives equal weight to each of the factors.

Selection Criteria: In evaluating applications for grants under this program competition, the Secretary uses selection criteria chosen from those listed in 34 CFR 75.210.

For Applications Contact: Education Publications Center (ED Pubs), PO Box 1398, Jessup, MD 20794–1398, Telephone (toll free) 1–877–433–7827, fax (301) 470–1244. If you use a telecommunications device for the deaf (TDD), you may call (toll free) 1–877–576–7734. You may also contact ED Pubs at its Web site: *http://www.ed.gov/pubs/edpubs.html.* Or you may contact ED Pubs at its e-mail address: *edpubs@inet.ed.gov.*

If you request an application from ED Pubs, be sure to identify this competition as follows: CFDA number 84.116J. You may also request application forms by calling (732) 544–2504 (fax on demand), or application guidelines by calling (202) 358–3041 (voice mail) or submitting the name of the competition and your name and postal address to *FIPSE@ed.gov* (e-mail).

Applications are also listed on the FIPSE Web site: *http://www.ed.gov/*

FIPSE. e-APPLICATIONS are available at: *http://e-grants.ed.gov.*

Individuals who use a telecommunications device for the deaf (TDD) may call the Federal Information Relay Service (FIRS) at 1–800–877–8339. For additional program information call the FIPSE office (202–502–7500) between the hours of 8 a.m. and 5 p.m., Eastern Time, Monday through Friday.

Individuals with disabilities may obtain this document in an alternative format (*e.g.,* Braille, large print, audiotape, or computer diskette) on request to the program contact person listed under *For Applications Contact.*

Individuals with disabilities may obtain a copy of the application package in an alternative format by contacting ED Pubs. However, the Department is not able to reproduce in an alternative format the standard forms included in the application package.

Application Procedures:

Note: Some of the procedures in these instructions for transmitting applications differ from those in the Education Department General Administrative Regulations (EDGAR) 34 CFR 75.102). Under the Administrative Procedure Act (5 U.S.C. 553) the Department generally offers interested parties the opportunity to comment on proposed regulations. However, these amendments make procedural changes only and do not establish new substantive policy. Therefore, under 5 U.S.C. 553(b)(A), the Secretary has determined that proposed rulemaking is not required.

Pilot Project for Electronic Submission of Applications

In Fiscal Year 2003, the U.S. Department of Education is continuing to expand its pilot project for electronic submission of applications to include additional formula grant programs and additional discretionary grant competitions. The European Community/United States of America Cooperation Program in Higher Education and Vocational Education and Training—84.116J is one of the programs included in the pilot project. If you are an applicant under the European Community/United States of America Cooperation Program in Higher Education and Vocational Education and Training, you may submit your application to us in either electronic or paper format.

The pilot project involves the use of the Electronic Grant Application System (e-Application) portion of the Grant Administration and Payment System (GAPS). Users of e-Application will be entering data on-line while completing their applications. You may not e-mail a soft copy of a grant application to us. If you participate in this voluntary pilot project by submitting an application electronically, the data you enter on-line will be saved into a database. We request your participation in e-Application. We shall continue to evaluate its success and solicit suggestions for improvement.

If you participate in e-Application, please note the following:

- Your participation is voluntary.
- You will not receive any additional point value because you submit a grant application in electronic format, nor will we penalize you if you submit an application in paper format. When you enter the e-Application system, you will find information about its hours of operation.
- You may submit all documents electronically, including the Application for Federal Assistance (ED 424), Budget Information—Non-Construction Programs (ED 524), and all necessary assurances and certifications.
- After you electronically submit your application, you will receive an automatic acknowledgement, which will include a PR/Award number (an identifying number unique to your application).
- Within three working days after submitting your electronic application, fax a signed copy of the Application for Federal Assistance (ED 424) to the Application Control Center after following these steps:

(1) Print ED 424 from the e-Application system.

(2) The institution's Authorizing Representative must sign this form.

(3) Place the PR/Award number in the upper right hand corner of the hard copy signature page of the ED 424.

(4) Fax the signed ED 424 to the Application Control Center at (202) 260–1349.

- We may request that you give us original signatures on all other forms at a later date.
- *Closing Date Extension in Case of System Unavailability:* If you elect to participate in the e-Application pilot for the European Community/United States of America Cooperation Program in Higher Education and Vocational Education and Training and you are prevented from submitting your application on the closing date because the e-Application system is unavailable, we will grant you an extension of one business day in order to transmit your application electronically, by mail, or by hand delivery. For us to grant this extension—

(1) You must be a registered user of e-Application, and have initiated an e-Application for this competition; and

(2)(a) The e-Application system must be unavailable for 60 minutes or more between the hours of 8:30 a.m. and 3:30 p.m., Washington, DC time, on the deadline date; or

(b) The e-Application system must be unavailable for any period of time during the last hour of operation (that is, for any period of time between 3:30 and 4:30 p.m., Washington, DC time) on the deadline date. The Department must acknowledge and confirm these periods of unavailability before granting you an extension. To request this extension you must contact either (1) the person listed elsewhere in this notice under **FOR FURTHER INFORMATION CONTACT** or (2) the e-GRANTS help desk at 1–888–336–8930.

You may access the electronic grant application for the European Community/United States of America Cooperation Program in Higher Education and Vocational Education and Training at: *http://e-grants.ed.gov.*

We have included additional information about the e-Application pilot project (see Parity Guidelines between Paper and Electronic Applications) in the application package.

Electronic Access to This Document

You may view this document, as well as all other Department of Education documents published in the **Federal Register,** in text or Adobe Portable Document Format (PDF) on the Internet at the following site: *www.ed.gov/legislation/FedRegister.*

To use PDF you must have Adobe Acrobat Reader, which is available free at this site. If you have questions about using PDF, call the U.S. Government Printing Office (GPO, toll free, at 1–888–293–6498; or in the Washington, DC, area at (202) 512–1530.

Note: The official version of this document is the document published in the **Federal Register.** Free Internet access to the official edition of the **Federal Register** and the Code of Federal Regulations is available on GPO Access at: *http://www.access.gpo.gov/nara/index.html.*

Program Authority: 20 U.S.C. 1138–1138d.

Dated: December 20, 2002.

Sally L. Stroup,

Assistant Secretary, Office of Postsecondary Education.

[FR Doc. 02–32713 Filed 12–26–02; 8:45 am]

BILLING CODE 4001–01–M

DEPARTMENT OF EDUCATION

[CFDA Nos. 84.116A, 84.116B]

Fund for the Improvement of Postsecondary Education-Comprehensive Program (Preapplications and Applications); Notice Inviting Applications for New Awards for Fiscal Year (FY) 2003

Purpose of Program: To provide grants or enter into cooperative agreements to improve postsecondary education opportunities.

Eligible Applicants: Institutions of higher education or combinations of those institutions and other public and private nonprofit institutions and agencies.

Applications Available: December 26, 2002.

Deadline for Transmittal of Preapplications: February 13, 2003.

Deadline for Transmittal of Final Applications: May 8, 2003.

Note: All applicants must submit a preapplication to be eligible to submit a final application.

Deadline for Intergovernmental Review: July 23, 2003.

Estimated Available Funds: $9,000,000 for new awards.

The Administration has requested $31 million for this program for FY 2003. The actual level of funding, if any, depends on final congressional action. However, we are inviting applications to allow enough time to complete the grant process if Congress appropriates funds for this program.

Estimated Range of Awards: $50,000—$275,000 or more per year.

Estimated Average Size of Awards: $156,000 per year.

Estimated Number of Awards: 53–56.

Note: The Department is not bound by any estimates in this notice.

Project Period: Up to 36 months.

Applicable Regulations: The Education Department General Administrative Regulations (EDGAR) in 34 CFR parts 74, 75, 77, 79, 80, 82, 85, 86, 97, 98, and 99.

Invitational Priorities: While applicants may propose any project within the scope of 20 U.S.C. 1138, under 34 CFR 75.105(c)(1) the Secretary is particularly interested in applications that meet one or more of the following invitational priorities. However, an application that meets one or more of these invitational priorities does not receive competitive or absolute preference over other applications.

Invitational Priority 1

Projects to improve the quality of K–12 teaching through new models of teacher preparation and through new kinds of partnerships between schools and colleges and universities that enhance students' preparation for, access to, and success in college.

Invitational Priority 2

Projects to promote innovative reforms in the curriculum and instruction of various subjects at the college preparation, undergraduate, and graduate/professional levels, especially through student-centered or technology-mediated strategies, and including the area of civic education.

Invitational Priority 3

Projects designing more cost-effective ways of improving postsecondary instruction and operations, *i.e.*, to promote more student learning relative to institutional resources expended.

Invitational Priority 4

Projects to support new ways of ensuring equal access to postsecondary education, and to improve rates of retention and program completion, especially for underrepresented students whose retention and completion rates continue to lag behind those of other groups, and especially encouraging wider adoption of proven approaches to this problem.

Methods for Applying Selection Criteria

For preapplications (preliminary applications) and final applications, the Secretary gives equal weight to each of the selection criteria. Within each of these criteria, the Secretary gives equal weight to each of the factors.

Selection Criteria

In evaluating preapplications and final applications for grants under this program competition, the Secretary uses the following selection criteria chosen from those listed in 34 CFR 75.210.

Preapplications. In evaluating preapplications, the Secretary uses the following selection criteria:

(a) *Need for project.* The Secretary reviews each proposed project for its need, as determined by the following factors:

(1) The magnitude or severity of the problem to be addressed by the proposed project.

(2) The magnitude of the need for the services to be provided or the activities to be carried out by the proposed project.

(a) *Significance.* The Secretary reviews each proposed project for its significance, as determined by the following factors:

(1) The potential contribution of the proposed project to increase knowledge or understanding of educational problems, issues, or effective strategies.

(2) The extent to which the proposed project involves the development or demonstration of promising new strategies that build on, or are alternatives to, existing strategies.

(3) The importance or magnitude of the results or outcomes likely to be attained by the proposed project, especially improvements in teaching and student achievement.

(4) The potential replicability of the proposed project or strategies, including, as appropriate, the potential for implementation in a variety of settings.

(c) *Quality of the project design.* The Secretary reviews each proposed project for the quality of its design, as determined by the extent to which the design of the proposed project is appropriate to, and will successfully address, the needs of the target population or other identified needs.

(d) *Quality of the project evaluation.* The Secretary reviews each proposed project for the quality of its evaluation, as determined by the extent to which the evaluation will provide guidance about effective strategies suitable for replication or testing in other settings.

Final Applications. In evaluating final applications, the Secretary uses the following selection criteria:

(a) *Need for project.* The Secretary reviews each proposed project for its need, as determined by the following factors:

(1) The magnitude or severity of the problem to be addressed by the proposed project.

(2) The magnitude of the need for the services to be provided or the activities to be carried out by the proposed project.

(b) *Significance.* The Secretary reviews each proposed project for its significance, as determined by the following factors:

(1) The potential contribution of the proposed project to increase knowledge or understanding of educational problems, issues, or effective strategies.

(2) The extent to which the proposed project involves the development or demonstration of promising new strategies that build on, or are alternatives to, existing strategies.

(3) The importance or magnitude of the results or outcomes likely to be attained by the proposed project, especially improvements in teaching and student achievement.

(4) The potential replicability of the proposed project or strategies, including, as appropriate, the potential for implementation in a variety of settings.

(c) *Quality of the project design.* The Secretary reviews each proposed project for the quality of its design, as determined by the following factors:

(1) The extent to which the design of the proposed project is appropriate to, and will successfully address the needs of, the target population or other identified needs.

(2) The extent to which the goals, objectives, and outcomes to be achieved by the proposed project are clearly specified and measurable.

(3) The extent to which the design for implementing and evaluating the proposed project will result in information to guide possible replication of project activities or strategies, including information about the effectiveness of the approach or strategies employed by the project.

(d) *Quality of the project evaluation.* The Secretary reviews each proposed project for the quality of its evaluation, as determined by the following factors:

(1) The extent to which the evaluation will provide guidance about effective strategies suitable for replication or testing in other settings.

(2) The extent to which the methods of evaluation are thorough, feasible, and appropriate to the goals, objectives, and outcomes of the proposed project.

(3) The extent to which the methods of evaluation include the use of objective performance measures that are clearly related to the intended outcomes of the project and will produce quantitative and qualitative data to the extent possible.

(e) *Quality of the management plan.* The Secretary reviews each proposed project for the quality of its management plan, as determined by the plan's adequacy to achieve the objectives of the proposed project on time and within budget, including clearly defined responsibilities, timelines, and milestones for accomplishing project tasks.

(f) *Quality of project personnel.* The Secretary reviews each proposed project for the quality of project personnel who will carry out the proposed project, as determined by the following factors:

(1) The extent to which the applicant encourages applications for employment from persons who are members of groups that have traditionally been underrepresented based on race, color, national origin, gender, age, or disability.

(2) The qualifications, including relevant training and experience, of key project personnel.

(g) *Adequacy of resources.* The Secretary reviews each proposed project for the adequacy of its resources, as determined by the following factors:

(1) The extent to which the budget is adequate to support the proposed project.

(2) The extent to which the costs are reasonable in relation to the objectives, design, and potential significance of the proposed project.

(3) The relevance and demonstrated commitment of each partner in the proposed project to the implementation and success of the project.

(4) The adequacy of support, including facilities, equipment, supplies, and other resources, from the applicant organization or the lead applicant organization.

(5) The potential for continued support of the project after Federal funding ends, including, as appropriate, the demonstrated commitment of appropriate entities to such support.

Pilot Project for Electronic Submission of Applications

In Fiscal Year 2003, the U.S. Department of Education is continuing to expand its pilot project for electronic submission of applications to include additional formula grant programs and additional discretionary grant competitions. The Comprehensive Program—CFDA No. 84.116A is one of the programs included in the pilot project. If you are an applicant under the Comprehensive Program—CFDA No. 84.116A, you may submit your preapplication to us in either electronic or paper format. Please note that electronic submission is NOT an option for final applications in FY 2003.

The pilot project involves the use of the Electronic Grant Application System (e-Application) portion of the Grant Administration and Payment System (GAPS). Users of e-Application will be entering data online while completing their applications. You may not e-mail a soft copy of a grant application to us. If you participate in this voluntary pilot project by submitting an application electronically, the data you enter online will be saved into a database. We invite your participation in e-Application. We shall continue to evaluate its success and solicit suggestions for improvement.

If you participate in e-Application when submitting your preapplication, please note the following:

- Your participation is voluntary.
- You will not receive any additional point value because you submit a grant application in electronic format, nor will we penalize you if you submit an application in paper format. When you enter the e-Application system, you will find information about its hours of operation.
- You may submit all documents electronically, including the Application for Federal Assistance (ED 424), Budget Information—Non-Construction Programs (ED 524), and all necessary assurances and certifications.
- After you electronically submit your application, you will receive an automatic acknowledgement, which will include a PR/Award number (an identifying number unique to your application).
- Within three working days after submitting your electronic application, fax a signed copy of the Application for Federal Assistance (ED 424) to the Application Control Center after following these steps:

(1) Print ED 424 from the e-Application system.

(2) The institution's Authorizing Representative must sign this form.

(3) Place the PR/Award number in the upper right hand corner of the hard copy signature page of the ED 424.

(4) Fax the signed ED 424 to the Application Control Center at (202) 260–1349.

- We may request that you give us original signatures on all other forms at a later date.
- *Closing Date Extension in Case of System Unavailability:* If you elect to participate in the e-Application pilot for the Comprehensive Program preapplication—CFDA No. 84.116A and you are prevented from submitting your application on the closing date because the e-Application system is unavailable, we will grant you an extension of one business day in order to transmit your application electronically, by mail, or by hand delivery.

For us to grant this extension—

(1) You must be a registered user of e-Application, and have initiated an e-Application for this competition; and

(2) (a) The e-Application system must be unavailable for 60 minutes or more between the hours of 8:30 a.m. and 3:30 p.m., Washington, DC time, on the deadline date; or

(b) The e-Application system must be unavailable for any period of time during the last hour of operation (that is, for any period of time between 3:30 and 4:30 p.m., Washington, DC time) on the deadline date. The Department must acknowledge and confirm these periods of unavailability before granting you an extension. To request this extension you must contact the e-GRANTS help desk at 1–888–336–8930.

You may access the electronic grant application for the Comprehensive Program preapplication—CFDA No. 84.116A at: *http://e-grants.ed.gov.*

We have included additional information about the e-Application pilot project (see Parity Guidelines between Paper and Electronic

Applications) in the application package.

For Applications Contact: Education Publications Center (ED Pubs), PO Box 1398, Jessup, MD 20794–1398. Telephone (toll free): 1–877–433–7827. FAX: (301) 470–1244. If you use a telecommunications device for the deaf (TDD), you may call (toll free): 1–877–567–7734.

You may also contact ED Pubs at its Web site: *http://www.ed.gov/pubs/edpubs.html.* Or you may contact ED Pubs at its e-mail address: *edpubs@inet.ed.gov.*

If you request an application from ED Pubs, be sure to identify this competition as follows: CDFA number 84.116A.

Note: Application text and forms are available on the FIPSE website (*see* **FOR FURTHER INFORMATION CONTACT**).

FOR FURTHER INFORMATION CONTACT: Fund for the Improvement of Postsecondary Education (FIPSE), U.S. Department of Education, 1990 K Street, NW., Washington, DC 20006–8544. Telephone: (202) 502–7500. The application text and forms may be obtained from the Internet address: *http://www.ed.gov/FIPSE/.*

If you use a telecommunications device for the deaf (TDD), you may call the Federal Information Relay Service (FIRS) at 1–800–877–8339.

Individuals with disabilities may obtain this document in an alternative format (*e.g.*, Braille, large print, audiotape, or computer diskette) on request to the contact listed under **FOR FURTHER INFORMATION CONTACT.**

Individuals with disabilities also may obtain a copy of the application package in an alternative format. However, the Department is not able to reproduce in alternative format the standard forms included in the application package.

Electronic Access to This Document

You may view this document, as well as all other Department of Education documents published in the **Federal Register**, in text or Adobe Portable Document Format (PDF) on the Internet at the following site: *www.ed.gov/legislation/FedRegister.*

To use PDF you must have Adobe Acrobat Reader, which is available free on this site. If you have questions about using PDF, call the U.S. Government Printing Office (GPO), toll free, at 1–888–293–6498; or in the Washington, DC area at (202) 512–1530.

Note: The official version of this document is the document published in the **Federal Register**. Free Internet access to the official edition of the **Federal Register** and the Code of Federal Regulations is available on GPO Access at: *http://www/access.gpo.gov/nara/index.html.*

Program Authority: 20 U.S.C. 1138–1138d.

Dated: December 20, 2002.

Jeffrey R. Andrade,

Deputy Assistant Secretary for Policy, Planning and Innovation.

[FR Doc. 02–32714 Filed 12–26–02; 8:45 am]

BILLING CODE 4001–01–P

DEPARTMENT OF ENERGY

Energy Employees Occupational Illness Compensation Act of 2000; Revision to List of Covered Facilities

AGENCY: Department of Energy.

ACTION: Notice of revision of listing of covered facilities.

SUMMARY: On January 17, 2001, and again on June 11, 2001, the Department of Energy (''Department'' or ''DOE'') published a list of facilities covered under the Energy Employees Occupational Illness Compensation Act of 2000 (''Act''), title 36 of Public Law 106–398. (66 FR 4003; 66 FR 31218). The Act establishes a program to provide compensation to individuals who developed illnesses as a result of their employment in nuclear weapons production-related activities and at certain federally-owned facilities in which radioactive materials were used. This notice revises the previous lists and provides additional information about the covered facilities, atomic weapons employers, and beryllium vendors. The original notice provides detailed background information about this matter.

FOR FURTHER INFORMATION CONTACT: Office of Worker Advocacy, 1–877–447–9756.

ADDRESSES: The Department welcomes comments on this list. Individuals who wish to suggest additional facilities for inclusion on the list or indicate why one or more facilities should be removed from the list should provide information to the Department. Comments should be addressed to: Office of Worker Advocacy (EH–8), U.S. Department of Energy, 1000 Independence Avenue, SW., Washington, DC 20585. Email: *worker_advocacy@eh.doe.gov.* Tollfree: 1–877–447–9756.

URL: *http://tis.eh.doe.gov/advocacy/.*

SUPPLEMENTARY INFORMATION:

Purpose

The Energy Employees Occupational Illness Compensation Act of 2000 (''Act''), title 36 of Public Law 106–398, establishes a program to provide compensation to individuals who developed illnesses as a result of their employment in nuclear weapons production-related activities and at certain federally-owned facilities in which radioactive materials were used. On December 7, 2000, the President issued Executive Order 13179 (''Order'') directing the Department of Energy (''Department'' or ''DOE'') to list covered facilities in the **Federal Register,** which the Department did on January 17, 2001, and again on June 11, 2001. This notice revises the previous lists and provides additional information about the covered facilities, atomic weapons employers, and beryllium vendors.

Section 2. c. iv of the Order instructs the Department to designate, pursuant to sections 3621(4)(B) and 3622 of the Act, atomic weapons employers and additions to the list of designated beryllium vendors. In addition, section 2. c. vii of the Order instructs the Department to list three types of facilities defined in the Act:

(1) Atomic weapons employer facilities, as defined in section 3621(4);

(2) Department of Energy facilities, as defined by section 3621(12); and

(3) Beryllium vendors, as defined by section 3621(6).

Compensation options and mechanisms are defined differently for each of these facility categories. The atomic weapons employer category includes atomic weapons employer facilities in which the primary work was not related to atomic weapons, and consequently these facilities are not commonly known as atomic weapons facilities. Their inclusion in this list is consistent with the Act, and is not intended as a classification for any other purpose.

The list at the end of this notice represents the Departments best efforts to date to compile a list of facilities under these three categories. This listing includes 350 facilities in 42 jurisdictions. It designates 29 additional beryllium vendor facilities, two additional Atomic Weapons Employer facilities and clarifies the status as Department of Energy facility for 13 facilities. The designation of the 29 additional beryllium vendor facilities represents the Departments best efforts to meet its statutory deadline in Pub. L. 106–398 § 3622 which sets a December 31, 2002, deadline for designating additional beryllium vendors.

To assist the public in understanding changes made in this list, the Department has prepared a description of these changes and made it available at the website noted. A copy may also be obtained by request to the Office of Worker Advocacy. The Department is continuing its research efforts, and

continued revisions to this list should be expected. The public is invited to comment on the list and to provide additional information.

In addition to continuing its research efforts, the Department has developed information dissemination mechanisms to make facility-specific data available to the public. Information about each listed facility, including the dates and type of work done there, is available by contacting the Office of Worker Advocacy. These descriptions are available in print form and also electronically (via the World Wide Web at *http://tis.eh.doe.gov/advocacy/*).

The list that follows covers facilities under the three categories of employers defined by the Act: atomic weapons employers (''AWE''), Department of Energy facilities (''DOE''), and beryllium vendors (''BE''). Each of the categories has been defined in the original notice and include:

1. Atomic Weapons Employers and Atomic Weapons Employer Facilities

The lines between research, atomic weapons production, and non-weapons production are often difficult to draw. For the purposes of this notice, and as directed by the Act, only those facilities whose work involved radioactive material that was connected to the atomic weapons production chain are included. This includes facilities that received radioactive material that had been used in the production of an atomic weapon, or the back end of the production cycle, such as waste handling or reprocessing operations. For the purposes of this listing, the Department considers commercial nuclear fuel fabrication facilities to be covered facilities for those periods when they either supplied radioactive materials to the Department or received radioactive materials that had been used in the Departments production reactors.

Corporate information regarding many of the listed facilities is often not readily available. The Department welcomes comments or additional information regarding facilities that may have supported atomic weapons production that are not on this list, as well as information that clarifies the work done at facilities named below.

2. Department of Energy Facilities

The listing of Department of Energy facilities is only intended for the context of implementing this Act and does not create or imply any new Departmental obligations or ownership at any of the facilities named on this list.

3. Beryllium Vendors and Beryllium Vendor Facilities

Section 3621(6) of the Act defines beryllium vendor as the following:

''(A) Atomics International.

(B) Brush Wellman, Incorporated, and its predecessor, Brush Beryllium Company.

(C) General Atomics.

(D) General Electric Company.

(E) NGK Metals Corporation and its predecessors, Kawecki-Berylco, Cabot Corporation, BerylCo, and Beryllium Corporation of America.

(F) Nuclear Materials and Equipment Corporation.

(G) StarMet Corporation, and its predecessor, Nuclear Metals, Incorporated.

(H) Wyman Gordan, Incorporated.

(I) Any other vendor, processor, or producer of beryllium or related products designated as a beryllium vendor for purposes of this title under Section 3622.''

The list identifies facilities that processed, produced, or provided beryllium metal for the Department, as defined by the Act.

Jurisdiction and facility name	Location	Facility type	State
AL—Southern Research Institute	Birmingham	AWE	Alabama.
AL—Speedring, Inc	Culman	BE	Alabama.
AL—Tennessee Valley Authority	Muscle Shoals	AWE	Alabama.
AK—Amchitka Nuclear Explosion Site	Amchitka Island	DOE	Alaska.
AK—Project Chariot Site Cape	Cape Thompson	DOE	Alaska.
CA—Arthur D. Little Co	San Francisco	AWE	California.
CA—Atomics International	Los Angeles County	BE DOE	California.
CA—California Research Corp	Richmond	AWE	California.
CA—Ceradyne, Inc	Costa Mesa	BE	California.
CA—Ceradyne, Inc	Santa Ana	BE	California.
CA—City Tool & Die MFG	Santa Clara	BE	California.
CA—C.L. Hann Industries	San Jose	BE	California.
CA—Dow Chemical Co	Walnut Creek	AWE	California.
CA—EDM Exotics	Hayward	BE	California.
CA—Electro Circuits, Inc	Pasadena	AWE	California.
CA—Electrofusion	Fremont	BE	California.
CA—Energy Technology Engineering Center (ETEC)	Santa Susana, Area IV	DOE	California.
CA—General Atomics	La Jolla	AWE BE DOE	California.
CA—General Electric Vallecitos	Pleasanton	AWE DOE	California.
CA—Hafer Tool	Oakland	BE	California.
CA—Hexcel Products	Berkeley	BE	California.
CA—Hunter Douglas Aluminum Corp	Riverside	AWE	California.
CA—Jerry Carroll Machining	San Carlos	BE	California.
CA—Lab. for Biomedical & Environmental Sciences	Los Angeles	DOE	California.
CA—Lab. for Energy-Related Health Research	Davis	DOE	California.
CA—Lab. of Radiobiology and Environmental Health	San Francisco	DOE	California.
CA—Lawrence Berkeley National Laboratory	Berkeley	DOE	California.
CA—Lawrence Livermore National Laboratory	Livermore	DOE	California.
CA—Lebow	Goleta	BE	California.
CA—Philco-Ford	Newport Beach	BE	California.
CA—Pleasanton Tool & Manufacturing	Pleasanton	BE	California.
CA—Poltech Precision	Fremont	BE	California.
CA—Robin Materials	Mountain View	BE	California.
CA—Ron Witherspoon, Inc	Campbell	BE	California.
CA—Sandia Laboratory, Salton Sea Base	Imperial County	DOE	California.
CA—Sandia National Laboratories Livermore	Livermore	DOE	California.
CA—Stanford Linear Accelerator	Palo Alto	DOE	California.
CA—Stauffer Metals, Inc	Richmond	AWE	California.

Jurisdiction and facility name	Location	Facility type	State
CA—Tapemation	Scotts Valley	BE	California.
CA—University of California	Berkeley	AWE DOE	California.
CO—Coors Porcelain	Golden	BE	Colorado.
CO—Grand Junction Operations Office	Grand Junction	DOE	Colorado.
CO—Project Rio Blanco Nuclear Explosion Site	Rifle	DOE	Colorado.
CO—Project Rulison Nuclear Explosion Site	Grand Valley	DOE	Colorado.
CO—Rocky Flats Plant	Golden	DOE	Colorado.
CO—Shattuck Chemical	Denver	AWE	Colorado.
CO—University of Denver Research Institute	Denver	AWE BE	Colorado.
CT—American Chain and Cable Co	Bridgeport	AWE	Connecticut.
CT—Anaconda Co	Waterbury	AWE	Connecticut.
CT—Bridgeport Brass Co., Havens Laboratory	Bridgeport	AWE	Connecticut.
CT—Combustion Engineering	Windsor	AWE DOE	Connecticut.
CT—Connecticut Aircraft Nuclear Engine Laboratory	Middletown	BE DOE	Connecticut.
CT—Dorr Corp	Stamford	AWE	Connecticut.
CT—Fenn Machinery	Hartford	AWE	Connecticut.
CT—Machlett Laboratories	Springdale	BE	Connecticut.
CT—New England Lime Co	Canaan	AWE	Connecticut.
CT—Seymour Specialty Wire	Seymour	AWE DOE	Connecticut.
CT—Sperry Products, Inc	Danbury	AWE	Connecticut.
CT—Torrington Co	Torrington	AWE	Connecticut.
DE—Allied Chemical and Dye Corp	North Claymont	AWE	Delaware.
DC—National Bureau of Standards	Washington	AWE	District of Columbia.
DC—Naval Research Laboratory	Washington	AWE DOE	District of Columbia.
FL—American Beryllium Co	Sarasota	BE	Florida.
FL— Armour Fertilizer Works	Bartow	AWE	Florida.
FL— Gardinier, Inc	Tampa	AWE	Florida.
FL— International Minerals and Chemical Corp	Mulberry	AWE	Florida.
FL— Pinellas Plant	Clearwater	DOE	Florida.
FL— University of Florida	Gainesville	AWE	Florida.
FL— Virginia-Carolina Chemical Corp	Nichols	AWE	Florida.
FL—W.R. Grace Co., Agricultural Chemical Div.	Ridgewood	AWE	Florida.
HI—Kauai Test Facility	Kauai	DOE	Hawaii.
ID—Argonne National Laboratory—West	Scoville	DOE	Idaho.
ID—Idaho National Engineering Laboratory	Scoville	DOE	Idaho.
ID—Northwest Machining & Manufacturing	Meridian	BE	Idaho.
IL—Allied Chemical Corp Plant	Metropolis	AWE	Illinois.
IL—American Machine and Metals, Inc	E. Moline	AWE	Illinois.
IL—Argonne National Laboratory—East	Argonne	DOE	Illinois.
IL—Armour Research Foundation	Chicago	AWE	Illinois.
IL—Blockson Chemical Co	Joliet	AWE	Illinois.
IL—C–B Tool Products Co	Chicago	AWE	Illinois.
IL—Crane Co	Chicago	AWE	Illinois.
IL—ERA Tool and Engineering Co	Chicago	AWE	Illinois.
IL—Fansteel Metallurgical Corp	North Chicago	BE	Illinois.
IL—Fermi National Accelerator Laboratory	Batavia	DOE	Illinois.
IL—Granite City Steel	Granite City	AWE DOE	Illinois.
IL—Great Lakes Carbon Corp	Chicago	AWE	Illinois.
IL—GSA 39th Street Warehouse	Chicago	AWE	Illinois.
IL—International Register	Chicago	AWE	Illinois.
IL—Kaiser Aluminum Corp	Dalton	AWE	Illinois.
IL—Lindsay Light and Chemical Co	W. Chicago	AWE	Illinois.
IL—Madison Site (Spectrulite)	Madison	AWE DOE	Illinois.
IL—Metallurgical Laboratory	Chicago	AWE BE DOE	Illinois.
IL—Midwest Manufacturing Co	Galesburg	AWE	Illinois.
IL—Museum of Science and Industry	Chicago	AWE	Illinois.
IL—National Guard Armory	Chicago	AWE DOE	Illinois.
IL—Podbeliniac Corp	Chicago	AWE	Illinois.
IL—Precision Extrusion Co	Bensenville	AWE	Illinois.
IL—Quality Hardware and Machine Co	Chicago	AWE	Illinois.
IL—R. Krasburg and Sons Manufacturing Co	Chicago	AWE	Illinois.
IL—Sciaky Brothers, Inc	Chicago	AWE	Illinois.
IL—Swenson Evaporator Co	Chicago	AWE	Illinois.
IL—W.E. Pratt Manufacturing Co	Joliet	AWE	Illinois.
IL—Wyckoff Drawn Steel Co	Chicago	AWE	Illinois.
IN—American Bearing Corp	Indianapolis	AWE	Indiana.
IN—Dana Heavy Water Plant	Dana	DOE	Indiana.
IN—General Electric Plant	Shelbyville	AWE	Indiana.
IN—Joslyn Manufacturing and Supply Co	Ft. Wayne	AWE	Indiana.
IN—Purdue University	Lafayette	AWE	Indiana.
IN—Wash-Rite	Indianapolis	AWE	Indiana.
IA—Ames Laboratory	Ames	DOE	Iowa.
IA—Bendix Aviation (Pioneer Division)	Davenport	AWE	Iowa.
IA—Iowa Ordnance Plant	Burlington	DOE	Iowa.

Jurisdiction and facility name	Location	Facility type	State
IA—Titus Metals	Waterloo	AWE	Iowa.
KS—Spencer Chemical Co., Jayhawk Works	Pittburg	AWE	Kansas.
KY—Paducah Gaseous Diffusion	Paducah	DOE	Kentucky.
LA—Ethyl Corp	Baton Rouge	BE	Louisiana.
MD—Armco-Rustless Iron & Steel	Baltimore	AWE	Maryland.
MD—W.R. Grace and Company	Curtis Bay	AWE DOE	Maryland.
MA—American Potash & Chemical	West Hanover	AWE	Massachusetts.
MA—C.G. Sargent & Sons	Graniteville	AWE	Massachusetts.
MA—Chapman Valve	Indian Orchard	AWE DOE	Massachusetts.
MA—Edgerton Germeshausen & Grier, Inc	Boston	AWE	Massachusetts.
MA—Fenwal, Inc	Ashland	AWE	Massachusetts.
MA—Franklin Institute	Boston	BE	Massachusetts.
MA—Heald Machine Co	Worcester	AWE	Massachusetts.
MA—La Pointe Machine and Tool Co	Hudson	AWE	Massachusetts.
MA—Massachusetts Institute of Technology	Cambridge	AWE BE	Massachusetts.
MA—Metals and Controls Corp	Attleboro	AWE	Massachusetts.
MA—National Research Corp	Cambridge	AWE	Massachusetts.
MA—Norton Co	Worcester	AWE BE	Massachusetts.
MA—Nuclear Metals, Inc	Concord	AWE BE	Massachusetts.
MA—Reed Rolled Thread Co	Worcester	AWE	Massachusetts.
MA—Shpack Landfill	Norton	AWE	Massachusetts.
MA—Ventron Corporation	Beverly	AWE DOE	Massachusetts.
MA—Watertown Arsenal	Watertown	AWE	Massachusetts.
MA—Winchester Engineering & Analytical Center	Winchester	DOE	Massachusetts.
MA—Woburn Landfill	Woburn	AWE	Massachusetts.
MA—Wyman Gordon Inc	Grayton, North Grafton	BE	Massachusetts.
MI—AC Spark Plug	Flint	AWE BE	Michigan.
MI—Baker-Perkins Co	Saginaw	AWE	Michigan.
MI—Bridgeport Brass Co	Adrian	AWE DOE	Michigan.
MI—Brush Beryllium Co	Detroit	AWE	Michigan.
MI—Carboloy Co	Detroit	AWE	Michigan.
MI—Extruded Metals Co	Grand Rapids	AWE	Michigan.
MI—Gerity-Michigan Corp	Adrian	BE	Michigan.
MI—Mitts & Merrel Co	Saginaw	AWE	Michigan.
MI—Oliver Corp	Battle Creek	AWE	Michigan.
MI—Revere Copper and Brass	Detroit	AWE BE	Michigan.
MI—Speedring Systems, Inc	Detroit	BE	Michigan.
MI—Star Cutter Corp	Farmington	AWE	Michigan.
MI—University of Michigan	Ann Arbor	AWE	Michigan.
MI—Wolverine Tube Division	Detroit	AWE BE	Michigan.
MN—Elk River Reactor	Elk River	DOE	Minnesota.
MS—Salmon Nuclear Explosion Site	Hattiesburg	DOE	Mississippi.
MO—Kansas City Plant	Kansas City	DOE	Missouri.
MO—Latty Avenue Properties	Hazelwood	AWE DOE	Missouri.
MO—Mallinckrodt Chemical Co., Destrehan St. Plant	St. Louis	DOE	Missouri.
MO—Medart Co	St. Louis	AWE	Missouri.
MO—Roger Iron Co	Joplin	AWE	Missouri.
MO—Spencer Chemical Co	Kansas City	AWE	Missouri.
MO—St. Louis Airport Storage Site (SLAPS)	St. Louis	AWE DOE	Missouri.
MO—Tyson Valley Powder Farm	St. Louis	AWE	Missouri.
MO—United Nuclear Corp	Hematite	AWE	Missouri.
MO—Weldon Spring Plant	Weldon Spring	DOE	Missouri.
NE—Hallam Sodium Graphite Reactor	Hallam	DOE	Nebraska
NV—Nevada Test Site	Mercury	DOE	Nevada.
NV—Project Faultless Nuclear Explosion Site	Central Nevada Test Site	DOE	Nevada.
NV—Project Shoal Nuclear Explosion Site	Fallon	DOE	Nevada.
NV—Yucca Mountain Site Characterization Project	Yucca Mountain	DOE	Nevada.
NJ—Alumium Co. of America (Alcoa)	Garwood	AWE	New Jersey.
NJ—American Peddinghaus Corp	Garwood	AWE	New Jersey.
NJ—Baker and Williams Co	Newark	AWE	New Jersey.
NJ—Bell Telephone Laboratories	Murray Hill	AWE	New Jersey.
NJ—Bloomfield Tool Co	Bloomfield	AWE	New Jersey.
NJ—Bowen Laboratory	North Branch	AWE	New Jersey.
NJ—Callite Tungsten Co	Union City	AWE	New Jersey.
NJ—Chemical Construction Co	Linden	AWE	New Jersey.
NJ—Du Pont Deepwater Works	Deepwater	AWE DOE	New Jersey.
NJ—International Nickel Co., Bayonne Laboratories	Bayonne	AWE	New Jersey.
NJ—J.T. Baker Chemical Co	Philipsburg	AWE	New Jersey.
NJ—Kellex/Pierpont	Jersey City	AWE DOE	New Jersey.
NJ—Maywood Chemical Works	Maywood	AWE DOE	New Jersey.
NJ—Middlesex Municipal Landfill	Middlesex	AWE DOE	New Jersey.
NJ—Middlesex Sampling Plant	Middlesex	DOE	New Jersey.
NJ—National Beryllia	Haskell	BE	New Jersey.
NJ—New Brunswick Laboratory	New Brunswick	DOE	New Jersey.

Jurisdiction and facility name	Location	Facility type	State
NJ—Picatinny Arsenal	Dover	AWE	New Jersey.
NJ—Princeton Plasma Physics Laboratory	Princeton	DOE	New Jersey.
NJ—Rare Earths/W.R. Grace	Wayne	AWE DOE	New Jersey.
NJ—Standard Oil Development Co of NJ	Linden	AWE	New Jersey.
NJ—Stevens Institute of Technology	Hoboken	BE	New Jersey.
NJ—Tube Reducing Co	Wallington	AWE	New Jersey.
NJ—U.S. Pipe and Foundry	Burlington	BE	New Jersey.
NJ—United Lead Co	Middlesex	AWE BE	New Jersey.
NJ—Vitro Corp of America (New Jersey)	West Orange	AWE	New Jersey.
NJ—Westinghouse Electric Corp (New Jersey)	Bloomfield	AWE	New Jersey.
NJ—Wykoff Steel Co	Newark	AWE	New Jersey.
NM—Accurate Machine & Tool	Albuquerque	BE	New Mexico.
NM—Albuquerque Operations Office	Albuquerque	DOE	New Mexico.
NM—Chupadera Mesa	Chupadera Mesa	DOE	New Mexico.
NM—Los Alamos Medical Center	Los Alamos	DOE	New Mexico.
NM—Los Alamos National Laboratory	Los Alamos	DOE	New Mexico.
NM—Lovelace Respiratory Research Institute	Albuquerque	DOE	New Mexico.
NM—Project Gasbuggy Nuclear Explosion Site	Farmington	DOE	New Mexico.
NM—Project Gnome Nuclear Explosion Site	Carlsbad	DOE	New Mexico.
NM—Sandia National Laboratories	Albuquerque	DOE	New Mexico.
NM—South Albuquerque Works	Albuquerque	DOE	New Mexico.
NM—Trinity Nuclear Explosion Site	White Sands Missile Range	DOE	New Mexico.
NM—Waste Isolation Pilot Plant	Carlsbad	DOE	New Mexico.
NY—Allegheny-Ludlum Steel	Watervliet	AWE	New York.
NY—American Machine and Foundry	Brooklyn	AWE	New York.
NY—Ashland Oil	Tonawanda	AWE DOE	New York.
NY—Baker and Williams Warehouses	New York	AWE DOE	New York.
NY—Bethlehem Steel	Lackawanna	AWE	New York.
NY—Bliss & Laughlin Steel	Buffalo	AWE DOE	New York.
NY—Brookhaven National Laboratory	Upton	DOE	New York.
NY—Burns & Roe, Inc	Maspeth	BE	New York.
NY—Carborundum Company	Niagara Falls	AWE	New York.
NY—Colonie Site (National Lead)	Colonie (Albany)	AWE DOE	New York.
NY—Crucible Steel Co	Syracuse	AWE	New York.
NY—Electro Metallurgical	Niagara Falls	AWE	New York.
NY—Environmental Measurements Laboratory	New York	DOE	New York.
NY—Fairchild Hiller Corporation	Farmingdale	BE	New York.
NY—General Astrometals	Yonkers	BE	New York.
NY—Hooker Electrochemical	Niagara Falls	AWE	New York.
NY— International Rare Metals Refinery, Inc	Mt. Kisco	AWE	New York.
NY—Ithaca Gun Co	Ithaca	AWE	New York.
NY—Lake Ontario Ordnance Works	Niagara Falls	DOE	New York.
NY—Ledoux and Co	New York	AWE	New York.
NY— Linde Air Products	Buffalo	AWE	New York.
NY—Linde Ceramics Plant	Tonawanda	AWE DOE	New York.
NY—New York University	New York	AWE	New York.
NY—Peek Street Facility [1]	Schenectady	DOE	New York.
NY—Radium Chemical Co	New York	AWE BE	New York.
NY—Rensselaer Polytechnic Institute	Troy	BE	New York.
NY—Sacandaga Facility [1]	Glenville	DOE	New York.
NY—SAM Laboratories, Columbia Univeristy	New York	DOE	New York.
NY—Seaway Industrial Park	Tonawanda	AWE DOE	New York.
NY—Seneca Army Depot	Romulus	AWE	New York.
NY—Separations Process Research Unit (at Knolls Lab.) [1].	Schenectady	DOE	New York.
NY—Simonds Saw and Steel Co	Lockport	AWE	New York.
NY—Staten Island Warehouse	New York	AWE	New York.
NY—Sylvania Corning Nuclear Corp.—Bayside Lab	Bayside	AWE BE	New York.
NY—Sylvania Corning Nuclear Corp.— Hicksville Plant	Hicksville	AWE DOE	New York.
NY—Titanium Alloys Manufacturing	Niagara Falls	AWE	New York.
NY—Trudeau Foundation	Saranac Lake	BE	New York.
NY—University of Rochester Atomic Energy Project	Rochester	DOE	New York.
NY—Utica St. Warehouse	Buffalo	AWE	New York.
NY—West Valley Demonstration Project	West Valley	AWE DOE	New York.
NY—Wolff-Alport Chemical Corp	Brooklyn	AWE	New York.
NC—Beryllium Metals and Chemical Corp	Bessemer City	BE	North Carolina.
NC—University of North Carolina	Chapel Hill	BE	North Carolina.
OH—Ajax Magnethermic Corp	Youngstown	AWE	Ohio.
OH—Alba Craft	Oxford	AWE DOE	Ohio.
OH—Associated Aircraft Tool and Manufacturing Co	Fairfield	AWE DOE	Ohio.
OH—B & T Metals	Columbus	AWE DOE	Ohio.
OH—Baker Brothers	Toledo	AWE DOE	Ohio.
OH—Battelle Laboratories—King Avenue	Columbus	AWE BE DOE	Ohio.
OH—Battelle Laboratories—West Jefferson	Columbus	AWE DOE	Ohio.

Jurisdiction and facility name	Location	Facility type	State
OH—Beryllium Production Plant (Brush Luckey Plant)	Luckey	BE DOE	Ohio.
OH—Brush Beryllium Co. (Cleveland)	Cleveland	AWE BE	Ohio.
OH—Brush Beryllium Co. (Elmore)	Elmore	BE	Ohio.
OH—Brush Beryllium Co. (Lorain)	Lorain	BE	Ohio.
OH—Cincinnati Milling Machine Co	Cincinnati	AWE	Ohio.
OH—Clifton Products Co	Painesville	BE	Ohio.
OH—Copperweld Steel	Warren	AWE	Ohio.
OH—Du Pont-Grasselli Research Laboratory	Cleveland	AWE	Ohio.
OH—Extrusion Plant (Reactive Metals Inc.)	Ashtabula	DOE	Ohio.
OH—Feed Materials Production Center (FMPC)	Fernald	DOE	Ohio.
OH—General Electric Company (Ohio)	Cincinnati/Evendale	AWE BE DOE	Ohio.
OH—Gruen Watch	Norwood	AWE	Ohio.
OH—Harshaw Chemical Co	Cleveland	AWE	Ohio.
OH—Herring-Hall Marvin Safe Co	Hamilton	AWE DOE	Ohio.
OH—Horizons, Inc	Cleveland	AWE	Ohio.
OH—Kettering Laboratory, University of Cincinnati	Cincinnati	BE	Ohio.
OH—Magnus Brass Co	Cincinnati	AWE	Ohio.
OH—McKinney Tool and Manufacturing Co	Cleveland	AWE	Ohio.
OH—Mitchell Steel Co	Cincinnati	AWE	Ohio.
OH—Monsanto Chemical Co	Dayton	AWE	Ohio.
OH—Mound Plant	Miamisburg	DOE	Ohio.
OH—Painesville Site (Diamond Magnesium Co.)	Painesville	AWE DOE	Ohio.
OH—Piqua Organic Moderated Reactor	Piqua	DOE	Ohio.
OH—Portsmouth Gaseous Diffusion Plant	Piketon	DOE	Ohio.
OH—R. W. Leblond Machine Tool Co	Cincinnati	AWE	Ohio.
OH—Tech-Art, Inc	Milford	AWE	Ohio.
OH—Tocco Induction Heating Div	Cleveland	AWE	Ohio.
OH—Vulcan Tool Co	Dayton	AWE	Ohio.
OK—Eagle Picher	Quapaw	BE	Oklahoma.
OK—Kerr-McGee	Guthrie	AWE	Oklahoma.
OR—Albany Research Center	Albany	AWE DOE	Oregon.
OR—Wah Chang	Albany	AWE	Oregon.
PA—Aeroprojects, Inc	West Chester	AWE BE	Pennsylvania.
PA—Aliquippa Forge	Aliquippa	AWE DOE	Pennsylvania.
PA—Aluminum Co of America (Alcoa) (Pennsylvania)	New Kensington	AWE	Pennsylvania.
PA—Beryllium Corp. of America (Hazleton)	Hazleton	BE	Pennsylvania.
PA—Beryllium Corp. of America (Reading)	Reading	BE	Pennsylvania.
PA—Birdsboro Steel & Foundry	Birdsboro	AWE	Pennsylvania.
PA—C.H. Schnoor	Springdale	AWE DOE	Pennsylvania.
PA—Carnegie Institute of Technology	Pittsburgh	AWE	Pennsylvania.
PA—Carpenter Steel Co.	Reading	AWE	Pennsylvania.
PA—Chambersburg Engineering Co	Chambersburg	AWE	Pennsylvania.
PA—Foote Mineral Co	East Whiteland Twp	AWE	Pennsylvania.
PA—Frankford Arsenal	Philadelphia	AWE	Pennsylvania.
PA—Heppenstall Co	Pittsburgh	AWE	Pennsylvania.
PA—Jessop Steel Co	Washington	AWE	Pennsylvania.
PA—Koppers Co., Inc	Verona	AWE	Pennsylvania.
PA—Landis Machine Tool Co	Waynesboro	AWE	Pennsylvania.
PA—McDanel Refractory Co	Beaver Falls	BE	Pennsylvania.
PA—Nuclear Materials and Equipment Corp (NUMEC)	Apollo	AWE BE	Pennsylvania.
PA—Nuclear Materials and Equipment Corp (NUMEC)	Parks Township	AWE	Pennsylvania.
PA—Penn Salt Co	Philadelphia/Wyndmoor	AWE	Pennsylvania.
PA—Philadelphia Naval Yard	Philadelphia	AWE	Pennsylvania.
PA—Shippingport Atomic Power Plant [1]	Shippingport	DOE	Pennsylvania.
PA—Superior Steel Co	Carnegie	AWE	Pennsylvania.
PA—U.S. Steel Co., National Tube Division	McKeesport	AWE	Pennsylvania.
PA—Vitro Manufacturing (Canonsburg)	Canonsburg	AWE BE	Pennsylvania.
PA—Westinghouse Atomic Power Dev. Plant	East Pittsburgh	AWE	Pennsylvania.
PA—Westinghouse Nuclear Fuels Division	Cheswick	AWE	Pennsylvania.
PR—BONUS Reactor Plant	Punta Higuera	DOE	Puerto Rico.
PR—Puerto Rico Nuclear Center	Mayaguez	DOE	Puerto Rico.
RI—C.I. Hayes, Inc	Cranston	AWE	Rhode Island.
SC—Savannah River Site	Aiken	DOE	South Carolina.
TN—Clarksville Facility	Clarksville	DOE	Tennessee.
TN—Manufacturing Sciences Corp	Oak Ridge	BE	Tennessee.
TN—Oak Ridge Gaseous Diffusion Plant (K–25)	Oak Ridge	DOE	Tennessee.
TN—Oak Ridge Hospital	Oak Ridge	DOE	Tennessee.
TN—Oak Ridge Institute for Science Education	Oak Ridge	DOE	Tennessee.
TN—Oak Ridge National Laboratory (X–10)	Oak Ridge	DOE	Tennessee.
TN—S–50 Oak Ridge Thermal Diffusion Plant	Oak Ridge	DOE	Tennessee.
TN—Vitro Corporation of America (Tennessee)	Oak Ridge	AWE BE	Tennessee.
TN—W.R. Grace (Tennessee)	Erwin	AWE	Tennessee.
TN—Y–12 Plant	Oak Ridge	DOE	Tennessee.
TX—AMCOT	Ft. Worth	AWE	Texas.

Jurisdiction and facility name	Location	Facility type	State
TX—Mathieson Chemical Co	Pasadena	AWE	Texas.
TX—Medina Facility	San Antonio	DOE	Texas.
TX—Pantex Plant	Amarillo	DOE	Texas.
TX—Sutton, Steele and Steele Co	Dallas	AWE	Texas.
TX—Texas City Chemicals, Inc	Texas City	AWE	Texas.
VA—BWXT	Lynchburg	AWE BE	Virgina.
VA—Thomas Jefferson National Accelerator Facility	Newport News	DOE	Virgina.
VA—University of Virginia	Charlottesville	AWE	Virgina.
WA—Hanford	Richland	DOE	Washington.
WA—Pacific Northwest National Laboratory	Richland	DOE	Washington.
WV—Huntington Pilot Plant	Huntington	DOE	West Virginia.
WI—Allis-Chalmers Co	West Allis, Milwaukee	AWE	Wisconsin.
WI—A.O. Smith	Milwaukee	BE	Wisconsin.
WI—Besley-Wells	South Beloit	AWE	Wisconsin.
WI—LaCrosse Boiling Water Reactor	LaCrosse	DOE	Wisconsin.
WI—Ladish Co	Cudahy	BE	Wisconsin.
MR—Pacific Proving Ground [2]	Marshall Islands	DOE	Marshall Islands.

[1] Consistent with the Act, coverage is limited to activities not performed under the responsibility of the Naval Nuclear Propulsion program.
[2] Pacific Proving Ground includes Bikini Atoll, Enewetak Atoll, Johnston (U.S. nuclear weapons testing activities only), and Christmas Island (U.S. nuclear weapons testing activities only).

Issued in Washington, DC, December 20, 2002.

Beverly A. Cook,

Assistant Secretary, Office of Environment, Safety and Health.

[FR Doc. 02–32690 Filed 12–26–02; 8:45 am]

BILLING CODE 6450–01–P

DEPARTMENT OF ENERGY

Federal Energy Regulatory Commission

[Docket No. CP03–28–000]

Tennessee Gas Pipeline Company; Notice of Request Under Blanket Authorization

December 20, 2002.

Take notice that on December 17, 2002, Tennessee Gas Pipeline Company (Tennessee), 9 E. Greenway Plaza, Houston, Texas 77046, filed an application pursuant to sections 157.205 and 157.208 of the Commission's Regulations under the Natural Gas Act (''NGA''), for authority to increase the maximum allowable operating pressure (MAOP) on two supply laterals located in San Jacinto and Polk counties, Texas. Tennessee proposes to perform this activity under its blanket certificate issued in Docket No. CP82–413–000. This application is on file with the Commission and open to public inspection. This filing is available for review at the Commission in the Public Reference Room or may be viewed on the Commission's Web site at *http://www.ferc.gov* using the ''FERRIS'' link. Enter the docket number excluding the last three digits in the docket number field to access the document. For assistance, please contact FERC Online Support at *FERCOnlineSupport@ferc.gov* or toll-free at (866)208–3676, or for TTY, contact (202)502–8659.

Specifically, Tennessee seeks authority to increase the MAOP of its West Ace (''Line 27A–100'') and its West Ace—Duke and New Ace lateral (''Line 27A–200'') from 663 to 750 psig to facilitate receipts of natural gas. Tennessee states that Lines 27A–100 and 27A–200 are supply laterals connected to Tennessee's mainline. Tennessee explains that the operating pressure of its mainline is 750 psig, but whenever the pressure on the mainline exceeds 648 psig, producers on the laterals must be shut in to avoid pressure buildup that exceeds the 663 psig MAOP limits on the two laterals. Tennessee proposes these uprates on the two laterals so that it can consistently and reliably receive natural gas from the affected producers located on these lateral lines. Tennessee estimates that the project will cost approximately $43,300.

Tennessee states that: (1) The proposed increases in MAOP for the two laterals do not require the construction of any new pipeline facilities and will not involve any ground disturbance; (2) the uprate testing will be performed using nitrogen gas, and therefore Tennessee expects no adverse environmental impact; and (3) all work will be performed within Tennessee's existing rights-of-way.

Any questions regarding this application should be directed to Veronica Hill, Certificates & Regulatory Compliance, Tennessee Gas Pipeline Company, 9 E Greenway Plaza, Houston, Texas 77046, at 832–676–3295 or FAX 832–676–2231.

Any person or the Commission's staff may, within 45 days after issuance of the instant notice by the Commission, file pursuant to Rule 214 of the Commission's Procedural Rules (18 CFR 385.214) a motion to intervene or notice of intervention and, pursuant to section 157.205 of the Regulations under the NGA (18 CFR 157.205), a protest to the request. If no protest is filed within the time allowed therefor, the proposed activity shall be deemed to be authorized effective the day after the time allowed for filing a protest. If a protest is filed and not withdrawn within 30 days after the time allowed for filing a protest, the instant request shall be treated as an application for authorization pursuant to section 7 of the NGA.

Comments, protests and interventions may be filed electronically via the Internet in lieu of paper; *see* 18 CFR 385.2001(a)(1)(iii) and the instructions on the Commission's Web site under the ''e-Filing'' link. The Commission strongly encourages electronic filings.

Magalie R. Salas,

Secretary.

[FR Doc. 02–32676 Filed 12–26–02; 8:45 am]

BILLING CODE 6717–01–P

DEPARTMENT OF ENERGY

Federal Energy Regulatory Commission

Notice of Application and Applicant-Prepared EA Accepted for Filing, Soliciting Motions To Intervene and Protests, and Soliciting Comments, and Final Terms and Conditions, Recommendations, and Prescriptions

December 20, 2002.

Take notice that the following hydroelectric application and applicant-

prepared environmental assessment has been filed with the Commission and is available for public inspection.

a. *Type of Application:* Major Unconstructed Project.

b. *Project No.:* P–12379.

c. *Date filed:* September 27, 2002.

d. *Applicant:* Lake Dorothy Hydro, Inc.

e. *Name of Project:* Lake Dorothy Hydroelectric Project.

f. *Location:* On 1,804 acres administered by the Tongass National Forest, at Lake Dorothy on Dorothy Creek, near Juneau, Alaska. Township 42S, Range 69E and 70E, Copper River Meridian.

g. *Filed Pursuant to*: Federal Power Act 16 U.S.C. 791(a)–825(r).

h. *Applicant Contact:* Mr. Corry V. Hildenbrand, President, Lake Dorothy Hydro, Inc., 5601 Tonsgard Court, Juneau, AK 99801–7201, (907) 463–6315; and Ms. Susan Tinney, Licensing Coordinator, S. Tinney Associates, Inc., P.O. Box 985, Lake City, CO 81235, (970) 944–1020.

i. *FERC Contact:* Michael H. Henry, E-mail—*mike.henry@ferc.gov* or telephone (503) 944–6762.

j. *Deadline for filing motions to intervene and protests, comments, and final terms and conditions, recommendations, and prescriptions*: 60 days from the issuance of this notice.

All documents (original and eight copies) should be filed with: Magalie R. Salas, Secretary, Federal Energy Regulatory Commission, 888 First Street, NE., Washington, DC 20426.

The Commission's Rules of Practice require all intervenors filing documents with the Commission to serve a copy of that document on each person on the official service list for the project. Further, if an intervenor files comments or documents with the Commission relating to the merits of an issue that may affect the responsibilities of a particular resource agency, they must also serve a copy of the document on that resource agency.

Motions to intervene, protests, comments, terms and conditions, recommendations, and prescriptions may be filed electronically via the Internet in lieu of paper. The Commission strongly encourages electronic filings. *See* 18 CFR 385.2001(a)(1)(iii) and the instructions on the Commission's Web site (*http://www.ferc.gov*) under the ''e-Filing'' link.

k. This application has been accepted for filing.

l. The Lake Dorothy Project would consist of: (1) A proposed lake tap of Lake Dorothy and 680-foot-long water transmission tunnel that would discharge water into Dorothy Creek between Lake Dorothy and Lieuy Lake. Water then flows out of Lieuy Lake into Bart Lake via the natural streambed between Lieuy and Bart Lakes, keeping Bart Lake at optimum levels for power generation; (2) a proposed lake tap of Bart Lake, 935-foot-long power tunnel, and 6,900-foot-long penstock from Bart Lake to a 14.3 megawatt surface powerhouse near tidewater; (3) 3.5 half miles of proposed overhead transmission line that would intertie with an existing overhead transmission line from the Snettisham Hydroelectric Project, which conveys power through a submarine cable across the Taku Inlet to Juneau, Alaska. The average annual generation is expected to be 74,500 megawatt hours. The proposed project facilities would be owned by the applicant.

m. A copy of the application is available for review at the Commission in the Public Reference Room or may be viewed on the Commission's Web site at *http://www.ferc.gov* using the ''FERRIS'' link. Enter the docket number excluding the last three digits in the docket number field to access the document. For assistance, contact FERC Online Support at *FERCOnlineSupport@ferc.gov* or toll-free at 1–866–208–3676, or for TTY, (202) 502–8659. A copy is also available for inspection and reproduction at the address in item h above.

n. Any qualified applicant desiring to file a competing application must submit to the Commission, on or before the specified deadline date for the particular application, a competing development application, or a notice of intent to file such an application. Submission of a timely notice of intent allows an interested person to file the competing development application no later than 120 days after the specified deadline date for the particular application. Applications for preliminary permits will not be accepted in response to this notice.

A notice of intent must specify the exact name, business address, and telephone number of the prospective applicant, and must include an unequivocal statement of intent to submit, if such an application may be filed, either a preliminary permit application or a development application (specify which type of application). A notice of intent must be served on the applicant(s) named in this public notice.

Anyone may submit comments, a protest, or a motion to intervene in accordance with the requirements of Rules of Practice and Procedure, 18 CFR 385.210, 385.211, 385.214. In determining the appropriate action to take, the Commission will consider all protests or other comments filed, but only those who file a motion to intervene in accordance with the Commission's Rules may become a party to the proceeding. Any comments, protests, or motions to intervene must be received on or before the specified comment date for the particular application.

The Commission directs, pursuant to section 4.34(b) of the Regulations (*see* Order No. 533 issued May 8, 1991, 56 FR 23108, May 20, 1991) that all comments, recommendations, terms and conditions and prescriptions concerning the application and APEA be filed with the Commission within 60 days from the issuance date of this notice. All reply comments must be filed with the Commission within 105 days from the date of this notice.

Anyone may obtain an extension of time for these deadlines from the Commission only upon a showing of good cause or extraordinary circumstances in accordance with 18 CFR 385.2008.

All filings must (1) bear in all capital letters the title ''PROTEST'', ''MOTION TO INTERVENE'', ''NOTICE OF INTENT TO FILE COMPETING APPLICATION,'' ''COMPETING APPLICATION,'' ''COMMENTS,'' ''REPLY COMMENTS,'' ''RECOMMENDATIONS,'' ''TERMS AND CONDITIONS,'' or ''PRESCRIPTIONS;'' (2) set forth in the heading the name of the applicant and the project number of the application to which the filing responds; (3) furnish the name, address, and telephone number of the person protesting or intervening; and (4) otherwise comply with the requirements of 18 CFR 385.2001 through 385.2005. All comments, recommendations, terms and conditions or prescriptions must set forth their evidentiary basis and otherwise comply with the requirements of 18 CFR 4.34(b). Agencies may obtain copies of the application directly from the applicant. A copy of any protest or motion to intervene must be served upon each representative of the applicant specified in the particular application. A copy of all other filings in reference to this application must be accompanied by proof of service on all persons listed in the service list prepared by the Commission in this proceeding, in accordance with 18 CFR 4.34(b) and 385.2010.

o. *Procedural schedule*: The application will be processed according to the following Hydro Licensing Schedule. Revisions to the schedule will be made as appropriate.

Notice of the availability of the draft EA: May 2003.

Notice of the availability of the final EA: July 2003.

Ready for Commission's decision on the application: October 2003.

Magalie R. Salas,

Secretary.

[FR Doc. 02–32677 Filed 12–26–02; 8:45 am]

BILLING CODE 6717–01–P

DEPARTMENT OF ENERGY

Federal Energy Regulatory Commission

Notice Soliciting Scoping Comments

December 20, 2002.

Take notice that the following hydroelectric application has been filed with the Commission and is available for public inspection:

a. *Type of Application:* New Major License.

b. *Project No.:* 2516–026.

c. *Date Filed:* December 17, 2001.

d. *Applicant:* Allegheny Energy Supply Company, LLC.

e. *Name of Project:* Dam No. 4 Hydro Station.

f. *Location:* On the Potomac River, near the Town of Shepherdstown, in Berkeley and Jefferson Counties, West Virginia.

g. *Filed Pursuant to*: Federal Power Act 16 U.S.C. 791(a)–825(r).

h. *Applicant Contact:* Charles L. Simons, Allegheny Energy Supply Company, LLC, 4350 Northern Pike, Monroeville, PA 15146, (412) 858–1675.

i. *FERC Contact:* Peter Leitzke, (202) 502–6059 or *peter.leitzke@ferc.gov*.

j. *Deadline for filing scoping comments*: 45 days from issuance date of this notice.

All documents (original and eight copies) should be filed with: Magalie R. Salas, Secretary, Federal Energy Regulatory Commission, 888 First Street, NE., Washington, DC 20426. Please include the project number (P–2516–026) on any comments or motions filed.

The Commission's Rules of Practice and Procedure require all interveners filing documents with the Commission to serve a copy of that document on each person on the official service list for the project. Further, if an intervener files comments or documents with the Commission relating to the merits of an issue that may affect the responsibilities of a particular resource agency, they must also serve a copy of the document on that resource agency.

Scoping comments may be filed electronically via the Internet in lieu of paper. *See* 18 CFR 385.2001(a)(1)(iii) and the instructions on the Commission's web site, *http://www.ferc.gov* , under the ''e-Filing'' link.

k. This application is not ready for environmental analysis at this time.

l. The existing Dam No. 4 Hydro Station Project consists of: (1) A 200-foot-long, 80-foot-wide headrace; (2) a stone and concrete powerhouse containing three generating units with a total installed capacity of 1,900 kilowatts; (3) a 350-foot-long, 90-foot-wide tailrace; (4) a substation; (5) a 4.5-mile-long, 34.5-kilovolt transmission line; and (6) appurtenant facilities. The applicant estimates that the total average annual generation would be 7,886 megawatthours. All generated power is sold to Allegheny Power for use in the existing electric grid system serving West Virginia and Maryland. The project dam and reservoir are owned by the United States and operated by the National Park Service.

m. A copy of the application is available for review at the Commission in the Public Reference Room or may be viewed on the Commission's Web site at *http://www.ferc.gov* using the ''FERRIS'' link. Enter the docket number excluding the last three digits in the docket number field to access the document. For assistance, call 1–866–208–3676 or for TTY, (202) 502–8659. A copy is also available for inspection and reproduction at the address in item h above.

n. *Scoping Process:* The Commission staff intends to prepare a Multiple Project Environmental Assessment (MPEA) for the Dam No. 4 Hydro Station Project (FERC No. 2561–026) and the Dam No. 5 Hydro Station Project (FERC No. 2517–012) in accordance with the National Environmental Policy Act. The MPEA will consider both site-specific and cumulative environmental impacts and reasonable alternatives to the proposed action. The staff believes that combining both the projects into one environmental document would provide the best approach for analyzing potential cumulative environmental effects associated with both projects located relatively close to one another on the Potomac River.

Commission staff does not propose to conduct any on-site scoping meetings at this time. Instead, we will solicit comments, recommendations, information, and alternatives by issuing a Scoping Document (SD).

Copies of the SD outlining the subject areas to be addressed in the MPEA were distributed to the parties on the Commission's mailing list. Copies of the SD may be viewed on the web at *http://www.ferc.gov* using the ''FERRIS'' link. Enter the docket number excluding the last three digits in the docket number field to access the document. For assistance, call 1–866–208–3676 or for TTY, (202) 502–8659.

Magalie R. Salas,

Secretary.

[FR Doc. 02–32678 Filed 12–26–02; 8:45 am]

BILLING CODE 6717–01–P

DEPARTMENT OF ENERGY

Federal Energy Regulatory Commission

Notice Soliciting Scoping Comments

December 20, 2002.

Take notice that the following hydroelectric application has been filed with the Commission and is available for public inspection:

a. *Type of Application:* Subsequent License.

b. *Project No.:* 2517–012.

c. *Date Filed:* December 17, 2001.

d. *Applicant:* Allegheny Energy Supply Company, LLC.

e. *Name of Project:* Dam No. 5 Hydro Station.

f. *Location:* On the Potomac River, near the Town of Hedgesville, in Berkeley County, West Virginia. The project dam and reservoir are owned by the United States and operated by the National Park Service.

g. *Filed Pursuant to*: Federal Power Act 16 U.S.C. 791(a)–825(r).

h. *Applicant Contact:* Charles L. Simons, Allegheny Energy Supply Company, LLC, 4350 Northern Pike, Monroeville, PA 15146, (412) 858–1675.

i. *FERC Contact:* Peter Leitzke, (202) 502–6059 or *peter.leitzke@ferc.gov*.

j. *Deadline for filing scoping comments*: 45 days from issuance date of this notice.

All documents (original and eight copies) should be filed with: Magalie R. Salas, Secretary, Federal Energy Regulatory Commission, 888 First Street, NE., Washington, DC 20426. Please include the project number (P–2517–012) on any comments or motions filed.

The Commission's Rules of Practice and Procedure require all interveners filing documents with the Commission to serve a copy of that document on each person on the official service list for the project. Further, if an intervener files comments or documents with the Commission relating to the merits of an issue that may affect the responsibilities of a particular resource agency, they

must also serve a copy of the document on that resource agency.

Scoping comments may be filed electronically via the Internet in lieu of paper. *See* 18 CFR 385.2001(a)(1)(iii) and the instructions on the Commission's Web site, *http://www.ferc.gov* , under the ''e-Filing'' link.

k. This application is not ready for environmental analysis at this time.

l. The existing Dam No. 5 Hydro Station Project consists of: (1) A 100-foot-long, 80-foot-wide headrace; (2) a brick and concrete powerhouse containing two generating units with a total installed capacity of 1,210 kilowatts; (3) a 250-foot-long, 90-foot-wide tailrace; (4) a substation; and (5) appurtenant facilities. The applicant estimates that the total average annual generation would be 5,945 megawatthours. All generated power is sold to Allegheny Power for use in the existing electric grid system serving West Virginia and Maryland.

m. A copy of the application is available for review at the Commission in the Public Reference Room or may be viewed on the Commission's Web site at *http://www.ferc.gov* using the ''FERRIS'' link. Enter the docket number excluding the last three digits in the docket number field to access the document. For assistance, call 1–866–208–3676 or for TTY, (202) 502–8659. A copy is also available for inspection and reproduction at the address in item h above.

n. *Scoping Process:* The Commission staff intends to prepare a Multiple Project Environmental Assessment (MPEA) for the Dam No. 4 Hydro Station Project (FERC No. 2561–026) and the Dam No. 5 Hydro Station Project (FERC No. 2517–012) in accordance with the National Environmental Policy Act. The MPEA will consider both site-specific and cumulative environmental impacts and reasonable alternatives to the proposed action. The staff believes that combining both the projects into one environmental document would provide the best approach for analyzing potential cumulative environmental effects associated with both projects located relatively close to one another on the Potomac River.

Commission staff do not propose to conduct any on-site scoping meetings at this time. Instead, we will solicit comments, recommendations, information, and alternatives by issuing a Scoping Document (SD).

Copies of the SD outlining the subject areas to be addressed in the EA were distributed to the parties on the Commission's mailing list. Copies of the SD may be viewed on the web at *http://www.ferc.gov* using the ''FERRIS'' link. Enter the docket number excluding the last three digits in the docket number field to access the document. For assistance, call 1–866–208–3676 or for TTY, (202) 502–8659.

Magalie R. Salas,

Secretary.

[FR Doc. 02–32679 Filed 12–26–02; 8:45 am]

BILLING CODE 6717–01–P

DEPARTMENT OF ENERGY

Federal Energy Regulatory Commission

[Docket No. AD03–3–000]

Capital Availability for Energy Markets; Notice of Technical Conference

December 20, 2002.

The Federal Energy Regulatory Commission (FERC) is planning two technical conferences on capital finance and credit in energy markets. The first will be on capital availability for energy infrastructure. It is scheduled for Thursday, January 16, 2003 at FERC headquarters, 888 First Street, NE., Washington, DC, in the Commission Meeting Room (Room 2C). The second, scheduled for February 5, covering credit issues and potential solutions, is still in the formative stages.

The January 16 conference is for the purpose of evaluating the status of capital available to energy markets and infrastructure. Speakers will include representatives of investment banks, commercial banks, insurance companies, hedge funds, credit rating agencies and other similar institutions as well as market participants and end users. In addition to FERC, representatives of other relevant agencies will attend.

We look forward to an informative discussion of the issues to clarify the state of financial investment in energy. Contradictory anecdotal reports on availability and unavailability of financial backing needs to be cleared up to ensure that adequate, well-functioning energy markets and infrastructure is available to enable workable, competitive markets.

The one-day meeting will begin at 8:30 a.m. and conclude at 5 p.m. All interested parties are invited to attend. There is no registration fee.

The Capitol Connection offers coverage of all open and special Commission meetings held at the Commission's headquarters live over the Internet, as well as via telephone and satellite. For a fee, you can receive these meetings in your office, at home, or anywhere in the world. To find out more about Capitol Connection's live Internet, phone bridge, or satellite coverage, contact David Reininger or Julia Morelli at (703) 993–3100, or visit www.capitolconnection.gmu.org. Capitol Connection also offers FERC open meetings through its Washington, DC-area television service.

Additionally, live and archived audio of FERC public meetings are available for a fee via National Narrowcast Network's Hearings.com, and Hearing-On-The-Line services. Interested parties may listen to the conference live by phone or web. Hearings.com audio will be archived immediately for listening on demand after the event is completed. Call (202) 966–2211 for further details.

The Agenda is currently being firmed up. We will issue further details on the conference, including the Agenda and a list of participants, as plans evolve. For additional information, please contact Anita Herrera of the Office of Market Oversight & Investigations at 202–502–8150 or by e-mail, *Anita.Herrera@ferc.gov*.

Magalie R. Salas,

Secretary.

[FR Doc. 02–32675 Filed 12–26–02; 8:45 am]

BILLING CODE 6717–01–P

DEPARTMENT OF ENERGY

Federal Energy Regulatory Commission

[Docket No. RM01–8–000]

Revised Public Utility Filing Requirements; Notice Providing Detail on Electric Quarterly Reports Software Availability and Announcing Schedule for Software Demonstrations

December 20, 2002.

The Commission issued an order on December 18, 2002, instructing all public utilities to file Electric Quarterly Reports using software available on its Web site beginning with the report due on or before January 31, 2003. The order ends the interim filing format and fully implements Order No. 2001,[1] a final rule which requires public utilities to file Electric Quarterly Reports.[2] This

[1] Revised Public Utility Filing Requirements, Order No. 2001, 67 FR 31043, FERC Stats. & Regs. ¶ 31,127 (April 25, 2002); reh'g denied, Order No. 2001–A, 100 FERC ¶ 61,074, reconsideration and clarification denied, Order No.2001–B, 100 FERC ¶ 61,342 (2002).

[2] Respondents are reminded that complete contract data, including all active contracts under 18 CFR part 35, are required beginning with this quarter's filing.

notice gives more details on the implementation of the new software and announces the availability of in-person and Internet-based software demonstrations.

The Electric Quarterly Report System can be accessed on the Commission's Web site at *http://www.ferc.gov*/electric/eqr/eqr.htm. The Electric Quarterly Report System Users Guide, a detailed guidance document, is also available to be downloaded from that web page. The software provides a user interface on the filer's workstation. (For those familiar with the Commission's Form 1 or Form 423 software, the Electric Quarterly Report System uses a similar approach.) It can be loaded onto several PCs to allow multiple users working on a LAN. Data can reside anywhere on the user's network. Data can be entered manually or imported into the system in Comma Separated Values (CSV) format.

In addition to the Electric Quarterly Report System Users Guide, respondents can participate in demonstrations of the software at the Commission and on-line, using the Internet. A live demo will be held at the Commission on Friday, December 20, 2002, at 10 a.m. Webex demos will be held on-line on December 20, 2002, at 3:30 p.m. and December 30, 2002, at 11 a.m. The Webex demos combine a conference call with an on-line demo in which the software is demonstrated on users' PC screens. (For more information on how Webex works, *see http://www.webex.com*.) It is free to the respondents who participate. There will also be a recorded Webex demo made available for downloading from the Commission's Web site by December 20. Persons desiring to participate in either of the Webex demos should e-mail *public.webtrain@ferc.gov* and state which demo they would like to participate in. No prior registration is necessary for the demo to be held at the Commission. If there is sufficient demand for more demos, they will be scheduled in January.

The data collected by the new Electric Quarterly Report System is identical to the data collected during the interim format period. A properly constructed Electric Quarterly Report file (using the interim format defined for the filings covering the second and third quarters of 2002) should be able to be imported easily into the software. For Excel filers, a new template has been created, which has field content and order identical to the Excel templates issued for the interim filings, but some ''behind-the-scenes'' formatting has been changed to facilitate a successful import.

The software has error checking features to ensure (to the extent possible) compliance with Order No. 2001. Among other things, the error checks will ensure consistency in the terms used in several data fields. The lists of acceptable values for the some of the restricted fields in the system have been revised. These fields include Increment Name, Increment Peaking Name, Product Name, and Time Zone. The permissible values for these fields are listed in Appendix A. In addition, consistent with the requirement in Order No. 2001 that public utilities must report book outs,[3] a new value for Product Name, ''Booked Out Power,'' has been added. Power sales that have been booked out must be identified in the transaction portion of the report using this Product Name.

If filers wish to include other values, they should register them as provided for in Order No. 2001. Filers are requested to list the suggested value in a document and file the document as a Comment in Docket ER02–2001–000 via the Internet. The requests will be reviewed to determine if the additional value is needed, or if an existing value will suffice.

The Electric Quarterly Report System includes a feature to submit the Electric Quarterly Report filing to the Commission. There is no file size limit for the Electric Quarterly Report submittals as there was in the interim format. In order to submit a filing to the Commission, a PIN code is required. (The software can be downloaded and used without the PIN; the PIN is required only for filing the Electric Quarterly Report with the Commission.) By January 15, 2003, respondents will receive an e-mail with their assigned PIN code. The e-mails will be sent to the contacts designated in the utilities' previous Electric Quarterly Report filings. If utilities have not previously filed an Electric Quarterly Report, or for some reason they do not receive an e-mail from the Commission designating their PIN code by January 15, 2003, they should e-mail ferconlinesupport@ferc.gov to request one. For security reasons, PINS will not be given out over the phone. The Electric Quarterly Report filing for the fourth quarter of 2002 must be filed using the new Electric Quarterly Report System on or before January 31, 2003. Submittals made using any other format will not be considered in compliance with Order No. 2001.

Beta testers and others who accessed the test software do not need to uninstall the Electric Quarterly Report software that they used during the testing period. The system will automatically update the test software to the production version. Any test filings made prior to January 1, 2003 will be purged from the Commission's data base.

If, after reading the Users Guide, respondents have questions about how to install or use the Electric Quarterly Report System software, they should call toll free at (866) 208–3676 or locally at (202) 502–6652 (or (202) 502–8659 for TTY) , or e-mail *ferconlinesupport@ferc.gov* to obtain help.

Magalie R. Salas,

Secretary.

Appendix A

Allowable Values for Restricted Fields

Increment Name
H = Hourly
D = Daily
M = Monthly
Y = Yearly 5x8
5x16
7x8
7x16
N/A = Not Applicable, Undefined, or Other

Increment Peaking Name
P = On Peak
OP = Off Peak
FP = Full Period
SH = Shoulder
UL = Ultra Peak
N/A = Not Applicable, Undefined, or Other

Product Name
For Cost-Based Power Sales:
Cost-Based Power
Economy Power
Emergency Energy
Unit Capacity
Unit Power Sale
Exchange
Peaking
Sale with exchange
Supplemental Power
Capacity
Energy
Back-up Power
Energy furnished without charge
Fuel Replacement Energy
Interchange Power
System Black Start Capability
SC—Schedule System Control & Dispatch
RV—Reactive Supply & Voltage Control
RF—Regulation & Frequency Response
EI—Energy Imbalance
SP—Spinning Reserve
SU—Supplemental Reserve
DT—Dynamic Transfer
Demand Charge
Customer Charge
Fuel Charge
Billing Service
Other

For Market-Based Power Sales:
Load Following
Marginal Peaking
Indexed Peaking
Capacity
Energy
System Black Start Capability

[3] Order No. 2001 at P 285, Order No. 2001–A at P 26.

SC—Schedule System Control & Dispatch
RV—Reactive Supply & Voltage Control
RF—Regulation & Frequency Response
EI—Energy Imbalance
SP—Spinning Reserve
SU—Supplemental Reserve
DT—Dynamic Transfer
Demand Charge
Customer Charge
Fuel Charge
Billing Service
Other

For Transmission:
Point-to-Point
Network
SC—Schedule System Control & Dispatch
RV—Reactive Supply & Voltage Control
RF—Regulation & Frequency Response
EI—Energy Imbalance
SP—Spinning Reserve
SU—Supplemental Reserve
DT—Dynamic Transfer
Real Power Transmission Loss
System Black Start Capability
Must Run
Specialized affiliate transactions
System Impact and/or Facilities Study Charge(s)
Direct Assignment Facilities Charge
Demand Charge
Customer Charge
Billing Service
Other

For Services
Return in Kind Transactions Between Control Areas
System Operating Agreements
Interconnection Agreement
Standards of Conduct
Network Operating Agreement
Membership Agreement
Reliability Agreement
Transmission Owners Agreement
Other

Time Zone
AD = Atlantic Daylight Savings Time
AS = Atlantic Standard Time
AP = Atlantic Prevailing Time
ED = Eastern Daylight Savings Time
ES = Eastern Standard Time
EP = Eastern Prevailing Time
CD = Central Daylight Savings Time
CS = Central Standard Time
CP = Central Prevailing Time
MD = Mountain Daylight Savings Time
MS = Mountain Standard Time
MP = Mountain Prevailing Time
PD = Pacific Daylight Savings Time
PS = Pacific Standard Time
PP = Pacific Prevailing Time
UT = Universal Time

[FR Doc. 02–32680 Filed 12–26–02; 8:45 am]

BILLING CODE 6717–01–P

ENVIRONMENTAL PROTECTION AGENCY

[FRL–7429–9]

Voluntary Data Call-In; World Trade Center Disaster Exposure and Human Health Information

AGENCY: Environmental Protection Agency.

ACTION: Notice; request for voluntary submission of human health data, exposure data, or other similarly technical information or reports related to the after effects of the collapse of the World Trade Center.

SUMMARY: The U.S. Environmental Protection Agency's (EPA) Office of Research and Development (ORD) is requesting the voluntary submission of data and other information or reports on human health effects or exposures that may have been generated by academia, hospitals, public or private institutions, businesses and corporations, or any other public or private sector entity, following the collapse of the World Trade Center on September 11, 2001.

Please note that this request for information is a voluntary data call-in. No one is obligated by this notice to submit information and there are no penalties for not submitting information. Submitted data and information will be analyzed by the EPA to help the Agency better assess the potential human health impacts of exposure to the environmental contaminants in both the outdoor and indoor air and in the settled dust in businesses and residences.

DATES: Please submit this information by March 1, 2003. While EPA is interested in receiving all technical information and data that may have been developed, the information received by March 1, 2003 will be the most useful to the Agency as it revises its draft report.

ADDRESSES: Submissions of reports, data, or other technical information should be mailed to the Technical Information Staff (8623D), U.S. Environmental Protection Agency, Office of Research and Development, National Center for Environmental Assessment, 1200 Pennsylvania Avenue NW, Washington, DC 20460; Telephone: 202–564–3261; Facsimile: 202–565–0050. If an overnight delivery service is used, information submissions should be delivered to: Technical Information Staff, National Center for Environmental Assessment, Suite 500, 808 17th Street NW, Washington, DC 20006. Electronic submissions may be e-mailed to: *nceadc.comment@epa.gov.*

Please note that all submissions received in response to this notice will be considered public information. For that reason, please do not submit any uncoded personal information (such as medical data), Confidential Business Information, or information protected by copyright. Due to limited resources, acknowledgments will not be sent.

FOR FURTHER INFORMATION CONTACT: For general information on this notice contact: Joanna Foellmer, National Center for Environmental Assessment, Telephone: 202–564–3208; E-mail: *foellmer.joanna@epa.gov.* For technical questions regarding this notice, contact: Matthew Lorber, National Center for Environmental Assessment, Telephone: 202–564–3243; E-mail: *lorber.matthew@epa.gov.*

SUPPLEMENTARY INFORMATION: In a companion **Federal Register** notice published today, EPA is announcing a 60-day public comment period on its external review draft titled, ''Exposure and Human Health Evaluation of Airborne Pollution from the World Trade Center Disaster (EPA/600/P–02/002A, October 2002).'' During the development of this draft report, EPA became aware that potentially significant data may have been developed by public and private sector institutions that could be pertinent to this report. These data, which to date have not been available to EPA, could help the Agency to better understand the potential human health impacts of exposures to environmental contaminants resulting from the World Trade Center disaster. Therefore, EPA encourages and appreciates the voluntary submission of these data, which will be considered in the development of the Agency's final report on potential human health impacts from exposure to the environmental contaminants resulting from the World Trade Center collapse.

Dated: December 20, 2002.

Paul Gilman,

Assistant Administrator, Office of Research and Development.

[FR Doc. 02–32601 Filed 12–26–02; 8:45 am]

BILLING CODE 6560–50–P

ENVIRONMENTAL PROTECTION AGENCY

[FRL–7431–2]

Science Advisory Board; Scientific and Technological Achievement Awards Review Panel; Request for Nominations

1. *Action:* Notice; request for nominations to the Scientific and

Technological Achievement Awards Review Panel of the Science Advisory Board of the U.S. Environmental Protection Agency.

2. *Summary:* The Science Advisory Board (SAB) of the U.S. Environmental Protection Agency (EPA or Agency) was established to provide independent scientific and technical advice, consultation, and recommendations to the EPA Administrator on the technical basis for Agency positions and regulations. At the request of the EPA Office of Research and Development (ORD), the SAB is forming a Scientific and Technological Achievement Awards Review Panel (hereinafter, the ''Panel'') of its Executive Committee to evaluate scientific and technological papers published in peer-reviewed journals and books by EPA authors and nominated for the FY2002 EPA Scientific and Technological Achievement Awards Program (STAA Program). The Scientific and Technological Achievement Awards—2003 Nomination Procedures and Guidelines can be found at the following Web site *http://es.epa.gov/ncer/rfa/current/2003_staa_mem_attachments.pdf.*

The SAB is hereby soliciting nominations for this Panel, which will serve in this capacity for three years. The Panel will consider nominations in the areas of control systems and technology, ecological research, health effects research and human risk assessment, monitoring and measurement methods, transport and fate, review articles, risk management and ecosystem restoration, integrated risk assessment, social sciences, and environmental futures. These areas are described in more detail at the Web site identified in the above paragraph.

The Science Advisory Board is a Federal advisory committee chartered under the Federal Advisory Committee Act (FACA), as amended (5 U.S.C. App.). The Panel will comply with the provisions of FACA and all appropriate SAB procedural policies, including the SAB process for panel formation described in the Overview of the Panel Formation Process at the Environmental Protection Agency Science Advisory Board, which can be found on the SAB's Web site at: *http://www.epa.gov/sab/pdf/ecm02003.pdf* Meetings of this panel will be closed to the public because the discussion will involve professional judgements on the relative merits of various employees and their respective work. Such personnel issues, where disclosure of information of a personal nature would constitute an unwarranted invasion of personal privacy, are protected from disclosure by section (c)(6) of the Government in the Sunshine Act, 5 U.S.C. 552(b)(6).

3. *Background:* The mission of the United States Environmental Protection Agency is to protect public health and safeguard and improve the natural environment—the air, water and land upon which life depends. Achievement of this mission requires the application of sound science to the assessment of environmental problems and to the evaluation of possible solutions. The process of publishing EPA scientific findings in peer reviewed journals enhances the rigor of the science and the reputation of the Agency and its programs. The STAA Program is a long-standing partnership between the Agency and the EPA Science Advisory Board. For over two decades, Agency scientists and engineers have submitted nominated scientific and technological papers through an internal Agency review process managed by the Office of Research and Development (ORD) to ensure that the best are submitted to the SAB for evaluation in the awards process. The SAB convenes an experienced group of scientists and engineers who review and evaluate the nominations. The Panel then produces a set of award recommendations which ORD uses in preparing the actual awards. Once the Panel completes its deliberations, its report will be forwarded to the Executive Committee of the Science Advisory Board, which will review the Panel's report at a public meeting and reach a judgment concerning its transmittal to the Administrator.

4. *Nominator's Assessment of Expertise:* For all nominations submitted to the EPA SAB, please indicate the specific areas of expertise the candidate could contribute in this upcoming review. The nominee should be a recognized, national-level expert able to review papers in one or more of the following areas:

a. Control systems and technology,
b. Ecological resarch,
c. Health effects research and human risk assessment,
d. Monitoring and measurement methods,
e. Transport and fate,
f. Risk management and ecosystem restoration,
g. Integrated risk assessment,
h. Social sciences, and
i. Environmental futures.

Experience reviewing articles for peer reviewed journals and/or service as an editor of a peer reviewed journal is highly desirable.

Please note that, to be considered, nominees must be available for a three-day face-to-face meeting. The meeting will be held on one of the three following sets of dates: June 30–July 2, July 22–24, or August 5–7. Nominees will be considered who are available on one or more of these three suites of dates.

5. *Process and Deadline for Submitting Nominations:* Any interested person or organization may nominate qualified individuals for membership on the Panel. Nominations should be submitted in electronic format and must include the information listed below. To be considered, all nominations must include: (a) A current biography, curriculum vitae (C.V.) or resume, which provides the nominee's background, experience and qualifications for this panel; and (b) a brief biographical sketch (''biosketch''). The biosketch should be no longer than one page and contain the following information for the nominee: current professional affiliations and positions held; service as an editor of peer reviewed journal(s), if any; research interests; leadership positions in national associations or professional publications or other significant distinctions; advanced degrees, including from which institutions these were granted; and sources of recent grant and/or other contract support.

Please provide nominations in the following manner:

(a) Send the nomination by E-mail to the EPA's Science Advisory Board at: *sab@epa.gov.*

(b) Use one E-mail per person being nominated.

(c) Please use ''STAA PANEL'' in the subject field, followed by the last name of the candidate you are nominating. (For example, STAA PANEL: Smith).

(d) Attach supporting information (i.e., resume, biosketch, etc.) in either MS Word or WordPerfect files formats ending in ''.doc'' or ''.wpd,'' respectively.

(e) In a separate file, please provide the following information in the order shown:

For the Person or Organization Making the Nomination:
First Name:
Last Name:
Person Title (e.g., Dr., Mr., Ms., etc.)
Organization Title:
E-mail Address:
Mailing Address:
Work Phone:
Work Fax:

Name of Nominee (if Nomination is not a self-nomination):
First Name:
Last Name:
Person Title (e.g., Dr., Mr., Ms., etc.)

Professional Title:
Department:
School or Unit:
University or Organization:
Mailing Address:
Work Phone:
Fax Work Phone:
E-mail Address:
Web site for C.V. (if one exists):
Expertise (Identify the Nominee's specific qualifying expertise and relate it to the review areas identified in Section 4 of this **Federal Register**):

Nominations should be submitted in electronic format as described above (and sent to *sab@epa.gov*). Anyone who is unable to submit nominations in electronic format may send hard copies of the nomination paperwork to Ms. White. Ms. White can be reached by first class mail at EPA Science Advisory Board, U.S. Environmental Protection Agency (1400A), 1200 Pennsylvania Avenue, NW., Washington, DC 20460; by overnight mail to Cubicle 6450Z, EPA Science Advisory Board, 1200 Pennsylvania Ave, NW., Washington, DC 20004; or via fax at: (202) 501–0582. Nominations should be submitted in time to arrive no later than January 31, 2003. Any questions should be directed to Ms. White either at *white.kathleen@epa.gov* or via telephone at: (202) 564–4559.

The EPA Science Advisory Board will generally not formally acknowledge or respond to nominations. From the nominees (termed the ''Widecast''), SAB Staff will develop a smaller subset (known as the ''Short List'') for more detailed consideration. Criteria used by the SAB Staff in developing this Short List are given at the end of the following paragraph. The Short List will be posted on the SAB Web site at: *http://www.epa.gov/sab*, and will include, for each candidate, the nominee's name and their biosketch. Public comments will be accepted for 21 calendar days on the Short List. During this comment period, the public will have the opportunity to provide information, analysis or other documentation on nominees that the SAB Staff should consider in evaluating candidates for the Panel.

For the EPA SAB, a balanced review panel is characterized by inclusion of candidates who possess the necessary knowledge, the relevant scientific perspectives (which, among other factors, can be influenced by work history and affiliation), and the collective breadth of experience to undertake the review. Public responses to the Short List candidates will be considered in the selection of the Panel, along with information provided by candidates and information gathered by EPA SAB Staff independently on the background of each candidate. Specific criteria to be used in evaluating an individual panelist include: (a) Scientific and/or technical expertise, knowledge, and experience (primary factors); (b) skills working in committees, subcommittees and advisory panels; (c) absence of financial conflicts of interest; (d) scientific credibility and impartiality; and (e) availability and willingness to serve.

Short List candidates will also be required to fill-out the ''Confidential Financial Disclosure Form for Special Government Employees Serving on Federal Advisory Committees at the U.S. Environmental Protection Agency'' (EPA Form 3110–48). This confidential form, which is used by EPA SAB Members and Consultants, allows Government officials to determine whether there is a statutory conflict between that person's public responsibilities (which includes membership on an EPA Federal advisory committee) and private interests and activities, or the appearance of a lack of impartiality, as defined by Federal regulation. The form may be viewed and downloaded from the following URL address: *http://www.epa.gov/sab/pdf/epaform3110–48.pdf.*

7. *General Information:* The approved policy under which the EPA SAB selects review panels is described in a recent SAB document, EPA Science Advisory Board (SAB) Panel Formation Process: Immediate Steps to Improve Policies and Procedures—An SAB Commentary (EPA–SAB–EC–COM–002–003), which can be found on the SAB's Web site at: *http://www.epa.gov/sab/pdf/ecm02003.pdf.*

Additional information concerning the EPA Science Advisory Board, including its structure, function, and composition, may be found on the EPA SAB Web site at: *http://www.epa.gov/sab*; and in the EPA Science Advisory Board FY2001 Annual Staff Report, which is available from the EPA SAB Publications Staff at phone: (202) 564–4533; via fax at: (202) 501–0256; or on the SAB Web site at *http://www.epa.gov/sab/pdf/annreport01.pdf.*

Dated: December 20, 2002.

A. Robert Flaak,

Acting Director, EPA Science Advisory Board Staff Office.

[FR Doc. 02–32776 Filed 12–26–02; 8:45 am]

BILLING CODE 6560–50–P

ENVIRONMENTAL PROTECTION AGENCY

[ER–FRL–6636–3]

Environmental Impact Statements and Regulations; Availability of EPA Comments

Availability of EPA comments prepared pursuant to the Environmental Review Process (ERP), under section 309 of the Clean Air Act and section 102(2)(c) of the National Environmental Policy Act as amended. Requests for copies of EPA comments can be directed to the Office of Federal Activities at (202) 564–7167. An explanation of the ratings assigned to draft environmental impact statements (EISs) was published in FR dated April 12, 2002 (67 FR 17992).

DRAFT EISs

ERP No. D–AFS–J65367–MT Rating EC2, Garver Project, Harvest and Old Growth Regeneration, Implementation, Kootenai National Forest, Three Rivers Ranger District, Lincoln County, MT.

Summary: EPA expressed environmental concerns regarding impacts to water quality from the proposed 1,250 acres of tractor timber harvest in a 303(d) listed water body and about minimal water quality monitoring. Fuel reduction treatments were well planned and designed with many protective measures.

ERP No. D–AFS–J65369–MT Rating EC2, Windmill Timber Sale and Road Decommissioning Project, Timber Harvesting, Road Construction and Road Decommissioning, Mill Creek Drainage, Absaroka Mountain Range, Gallatin National Forest, MT.

Summary: EPA expressed environmental concerns with potential effects of timber harvests and road construction to water quality, and to wildlife species dependent upon old growth habitats. EPA recommends that additional information on aquatic monitoring should be included in the final EIS.

ERP No. D–FTA–E59002–NC Rating LO, South Corridor Light Rail Project to Provide Light Rail Service between the Town of Pineville, and Downtown Charlotte, City of Charlotte, Charlotte-Mecklenburg County, NC.

Summary: EPA lacks objections to the project as proposed and believes that the DEIS provided adequate information on the project's environmental impacts.

ERP No. D–NPS–J65365–00 Rating EC2, Glen Canyon National Area, Personal Watercraft Rule-Making, Implementation, Lake Powell, Coconino County, AZ and Garfield, Kane, San Juan and Wayne Counties, UT.

Summary: EPA expressed environmental concerns with potential impacts to water quality, specifically that it is not clear if Utah water quality standards are being violated. In addition, the DEIS does not disclose strategies for management of personal watercraft on Lake Powell. EPA recommends that a monitoring plan be included, given the potential for violation of water quality standards.

Final EISs

ERP No. F–AFS–J65337–MT Cave Gulch Post-Fire Salvage Sale, Harvesting Dead or Dying Trees, Implementation, Helena National Forest, Big Belts Mountain, Lewis and Clark County, MT.

Summary: EPA expressed environmental concerns about potential adverse impacts of timber harvest on water quality limited Magpie and Hellgate Creeks, already impacted by wildfire. EPA supported proposed road decommissioning, Grouse Creek restoration, revegetation, and other mitigation measures, and supported proposed monitoring to document and validate minimal impacts.

ERP No. F–DOE–L09814–ID Idaho High-Level Waste and Facilities Disposition, Alternatives for Managing High-Level Waste, Mixed Transuranic Waste/Sodium Bearing Waste and Associated Radioactive Wastes Evaluation, Bannock, Bingham, Bonneville, Butte, Madison, Clark, and Jefferson Counties, ID.

Summary: EPA continues to have environmental objections because the EIS does not clearly indicate how the separation alternatives meet the requirments of DOE Order 435.1 and about the option of treating High-Level Waste (HLW) at Hanford. EPA also has serious concerns with the lack of a clearly defined preferred alternative in the FEIS. EPA recommends that DOE select a preferred alternative that does not commit to treating HLW at Hanford and which commits to an early decision concerning the closure of the Calciner.

Dated: December 23, 2002.

Joseph C. Montgomery,

Director, NEPA Compliance Division, Office of Federal Activities.

[FR Doc. 02–32788 Filed 12–26–02; 8:45 am]

BILLING CODE 6560–50–P

ENVIRONMENTAL PROTECTION AGENCY

[ER–FRL–6636–2]

Environmental Impact Statements; Notice of Availability

Responsible Agency: Office of Federal Activities, General Information (202) 564–7167 or *http://www.epa.gov/compliance/nepa/*. Weekly receipt of Environmental Impact Statements Filed December 16, 2002 Through December 20, 2002 Pursuant to 40 CFR 1506.9.

EIS No. 020517, FINAL SUPPLEMENT, AFS, ID, North Lochsa Face Landscape and Watershed Assessment Project, Implementation, Clearwater National Forest, Lochsa Ranger District, Idaho County, ID, Wait Period Ends: February 10, 2003, Contact: Lois Foster (208) 935–4258.

EIS No. 020518, FINAL EIS, AFS, KY, Daniel Boone National Forest Land Exchange Project, Exchanging two Federal Tracts for 98.17 Acres of Privately Owned Land located in Owsley County, Federal Lands to be considered are Tract 107AB (52.15 acres) located on Langdon Branch in Leslie County and Tract 745 (39.96 acres) located on Spicer Fork in Perry County, KY, Wait Period Ends: January 27, 2002, Contact: William M. Rock (859) 745–3100.

EIS No. 020519, DRAFT EIS, NPS, WA, Fort Vancouver National Historic Site, General Management Plan, Development Concept Plans, Implementation, Oregon County, WA, Comment Period Ends: February 25, 2003, Contact: Alan Schmierer (510) 817–1441.

EIS No. 020520, DRAFT EIS, FHW, NY, Slingerlands Bypass Extension (NYS Route 85) (P.I.N. 1125.19) Route 140 (Cherry Avenue Extension) to the Albany City Line, Reconstruction Town of Bethlehem, Albany County, NY, Comment Period Ends: February 18, 2003, Contact: Robert Arnold (518) 431–4127.

EIS No. 020521, DRAFT EIS, AFS, MT, Management Area 11 Snowmobile Use Areas on the Seeley Lake Ranger District, Implementation, Lola National Forest, Missoula and Powell Counties, MT, Comment Period Ends: February 11, 2003, Contact: Timothy G. Love (406) 677–2233.

EIS No. 020522, FINAL EIS, AFS, CA, Brown Darby Fuel Reduction Project, Proposal for a Combination of the Salvage Harvesting of Trees Killed and other Fuels Management Activities, Stanislaus National Forest, Calaveras Ranger District, Calaveras and Tuolumne Counties, CA, Wait Period Ends: January 27, 2003, Contact: Kathy Aldrich (209) 795–1381. This document is available on the Internet at: *http://www.r5.fs.fed.us/stanislaus.*

EIS No. 020523, FINAL EIS, COE, CA, Middle Creek Flood Damage Reduction and Ecosystem Restoration Project, Implementation, Located between Highway 20 and Middle Creek immediately northwest of Clear Lake, Lake County, CA, Wait Period Ends: January 27, 2003, Contact: Jerry Fuentes (916) 557–6706.

EIS No. 020524, DRAFT EIS, FHW, MO, MO–17 Transportation Improvement Project, From South of Route O to South of Howell County Line Bridge Replacement with Approaches Job # J9P0440, Texas, Shannon and Howell Counties, MO, Comment Period Ends: February 18, 2003, Contact: Don Neumann (573) 636–7104.

EIS No. 020525, FINAL EIS, COE, FL, Fort Pierce Shore Protection Project, Future Dredging of Capron Shoal, Implementation, St. Lucie County, FL, Wait Period Ends: January 27, 2003, Contact: William Lang (904) 232–2615.

EIS No. 020526, FINAL EIS, USA, KY, Blue Grass Army Depot, Destruction of Chemical Munitions, Design, Construction, Operation and Closure of a Facility to Destroy the Chemical Agent and Munitions, Madison County, KY, Wait Period Ends: January 27, 2003, Contact: Penny Robitaille (410) 436–4178.

EIS No. 020527, FINAL EIS, NOA, WA, Anadromous Fish Agreements and Habitat Conservation Plans for the Wells, Rocky Reach, and Rock Island Hydroelectric Projects, Implementation, Incidental Take Permits, Chelan and Douglas Counties, WA, Wait Period Ends: January 27, 2003, Contact: Ritchie Graves (503) 231–6891. This document is available on the Internet at: *http://www.nwr.noaa.gov.*

Amended Notices

EIS No. 020442, DRAFT EIS, COE, FL, Ona Mine Project, Proposes to Construct and Operate a Surface Mine for the Recovery of Phosphate Rock, in Western Hardee County, FL, Comment Period Ends: March 03, 2003, Contact: Charles A. Schnepel (813) 840–2908. Revision of FR Notice Published on 11/01/2002: CEQ Comment Period Ending 12/16/2002 has been Extended to 3/3/2003.

Dated: December 23, 2002.

Joseph C. Montgomery,

Director, NEPA Compliance Division, Office of Federal Activities.

[FR Doc. 02–32789 Filed 12–26–02; 8:45 am]

BILLING CODE 6560–50–P

ENVIRONMENTAL PROTECTION AGENCY

[FRL–7431–5]

Comprehensive Environmental Response, Compensation and Liability Act (CERCLA) or Superfund, Section 104(k)(6); Announcement of Extension of Proposal Deadlines for the Competition for the 2003 National Brownfields Job Training Grants

AGENCY: Environmental Protection Agency.

ACTION: Notice of the extension of application deadline for submissions of proposals for Brownfields Job Training Grants.

SUMMARY: The United States Environmental Protection Agency (EPA) will begin to accept proposals for the National Brownfields Job Training Grants on December 17, 2002 (67 FR 242). The deadline for the due date of proposals has been extended until February 14, 2003. This notice refers to **Federal Register** Notice titled ''Announcement of Proposal Deadlines for the Competition for the 2003 National Brownfields Job Training Grants.''

DATES: This action is effective as of December 27, 2002. The application deadline for proposals for the 2003 job training grants has been extended until February 14, 2003. All proposals must be postmarked by USPS or delivered to U.S. EPA Headquarters no later than February 14, 2003, and a duplicate copy sent to the appropriate U.S. EPA Regional Office.

Obtaining Proposal Guidelines: The proposal guidelines are available via the Internet: *http://www.epa.gov/brownfields/.*

Copies of the proposal guidelines will also be mailed upon request. Requests should be made by calling the U.S. EPA Call Center at the following numbers:

Washington, DC Metro Area at 703–412–9810.

Outside Washington, DC Metro at 1–800–424–9346.

TDD for the Hearing Impaired at 1–800–553–7672.

In order to ensure that the guidelines are received in time to be used in the preparation of the proposal, applicants should request a copy as soon as possible and in any event no later than seven (7) working days before the proposal due date. Applicants who request copies after that date might not receive the proposal guidelines in time to prepare and submit a responsive proposal.

ADDRESSES: Mailing addresses for U.S. EPA Regional Offices and U.S. EPA Headquarters are provided in the Proposal Guidelines.

FOR FURTHER INFORMATION CONTACT: The U.S. EPA's Office of Solid Waste and Emergency Response, Office of Brownfields Cleanup and Redevelopment, (202) 566–2777.

SUPPLEMENTARY INFORMATION: On January 11, 2002, President George W. Bush signed into law the Small Business Liability Relief and Brownfields Revitalization Act. This act amended the Comprehensive Environmental Response, Compensation and Liability Act of 1980, as amended (CERCLA) to authorize federal financial assistance for brownfields revitalization, including grants for assessment, cleanup, and job training. Funding for the brownfields job training grants is authorized under section 104(k)(6) of CERCLA, 42 U.S.C. 9604(k)(6). Eligibility for Brownfields job training grants is limited to ''eligible entities'' as defined in section 104(k)(1) of CERCLA and non profit organizations.

Dated: December 19, 2002.

Linda Garczynski,

Director, Office of Brownfields Cleanup and Redevelopment, Office of Solid Waste and Emergency Response.

[FR Doc. 02–32772 Filed 12–26–02; 8:45 am]

BILLING CODE 6560–50–P

ENVIRONMENTAL PROTECTION AGENCY

[FRL–7431–6]

Notice of National Environmental Information Exchange Network Grant Guidelines

AGENCY: Environmental Protection Agency (EPA).

ACTION: Notice of solicitation for proposals.

SUMMARY: The goal of the National Environmental Information Exchange Grant Program is to advance the National Environmental Information Exchange Network (Network) by encouraging State and Tribal environmental data integration efforts. The Network was created almost three years ago in an effort to integrate the environmental data management systems of the States, Tribes, and federal government by using the Internet and creating standardized information exchange formats. Completion of this integrated network will enable fast and timely sharing of environmental information from across the country and improve our ability to more effectively distribute that information to the public.

The Network supports one of the major goals of the President's Management Agenda for E-Government by helping create a seamless, citizen-centered government. The Network uses technologies and approaches that are found in E-commerce and provides an alternative to the historic approaches for exchanging data that rely upon data being processed directly to multiple EPA national data systems. Ultimately, network participants will house information on their own nodes or portals where it will be available upon authorized request.

EPA and the Environmental Council of the States have developed the Network Implementation Plan and the Network Blueprint that further explain the goals and operating principles for the Network. The Network Implementation Plan describes in detail the activities and mechanisms that must be developed to operate and manage the Network; the Network Blueprint document describes the foundation for the Network Implementation Plan. Both documents can be accessed at: *http://www.epa.gov/neengprg/library/.*

The President's fiscal year (FY) 2003 budget, which is now before Congress, includes $25 million for this grant program. Subject to availability of appropriations for this purpose, EPA plans to select, through a competitive process, grant proposals that will be awarded to States, the District of Columbia, Trust Territories (referred to as States in the remainder of this guidance), and Federally Recognized Indian Tribes (referred to as Tribes in the remainder of this guidance) for capacity building capabilities for Network participation. Tribes will receive funds from a designated set-aside pool of resources. A designated set-aside of funds will also support the Network Administration for States and Tribes. This notice sets forth the process that will be used for selecting proposals and forms necessary to prepare a proposal.

DATES: Proposals must be postmarked and also received electronically by EPA on or before February 18, 2003.

ADDRESSES: Proposals must be submitted by mail or courier to U.S. EPA Headquarters, Office of Information Collection, Attn: Lyn Burger, EPA West, Mail Code 2821T, 1200 Pennsylvania Avenue, NW., Washington, DC 20460 and electronically by e-mail: *neengprg@epamail.epa.gov.* This notice for request for proposals is final. However, comments and questions may

be directed to e-mail at *neengprg@epamail.epa.gov.*

FOR FURTHER INFORMATION CONTACT: Lyn Burger, U.S. E.P.A., Office of Information Collection, Mail Code 2821T, 1200 Pennsylvania Avenue, NW., Washington, DC 20460; Phone (202) 566–1024; E-mail at *neengprg@epamail.epa.gov* or one of the regional contacts listed in Section VII. For additional information, please visit the Grant Program website at *http://www.epa.gov/neengprg.*

Dated: December 20, 2002.

Kimberly T. Nelson,

Assistant Administrator and Chief Information Officer, Office of Environmental Information.

FY2003 National Environmental Information Exchange Network Grant Program.

Section I. Overview

This document solicits grant proposals from States and Tribes. Proposals will be due to EPA on or before February 18, 2003. There are no matching requirements for any part of the Grant Program.

Only those States and Tribes whose proposals are selected for funding will need to proceed through the formal grant application process. After notification by EPA that the applicant's proposal has been selected for funding, the successful nominees will have 60 days to complete and submit the formal grant application. EPA may ask successful nominees to modify objectives, work plans or budgets prior to the final approval of the award. Final FY 2003 awards will be subject to availability of appropriations for this purpose. Subsequent year funding beyond FY 2003 depends on continued appropriations.

Although the selections will be announced and awarded at the national level, Network grants will be managed by the respective EPA Regional Office. The final scope of activities to be completed and the duration of the projects will be determined in pre-award negotiations between the nominee and the respective EPA Regional Project Coordinator (see Section VII for a listing of EPA Regional Project Coordinators). The Regional Project Coordinator will be available to provide additional guidance in preparing the application, filling out the necessary forms, and answering any questions. In anticipation of this process, all applicants should refer to the web site *http://www.epa.gov/ogd/AppKit/.*

Section II. Network Grant Components

The Network Grant Program has four main parts which are:

1. Network One Stop
2. Network Readiness
3. Network Challenge
4. Network Administration

Section III. Guidance for Applicants

This section describes the application process for each part of the Grant Program.

Part 1—describes general requirements that apply to each part of the Grant Program.

Part 2—describes the eligibility, availability and use of funds and the particular requirements for submitting proposals for Network One Stop Grants.

Part 3—describes the eligibility, availability and use of funds and the particular requirements for submitting proposals for Network Readiness Grants.

Part 4—describes the eligibility, availability and use of funds, and the particular requirements for submitting proposals for Network Challenge Grants.

Part 5—describes the Network Administration Grant.

Part 1—Contents for Proposals

Federal Form

Application for Federal Assistance (SF424), the official form required for all federal grants and the Budget Information (SF 424A) are federal forms that must be included with the submission of a federal grant proposal. The SF424 requests information about the grantee and the proposed project. A signed original of this form is required by EPA. The SF 424A requests budget information on the proposed project. An electronic copy of both forms and instructions for completing the forms can be obtained at *http://www.epa.gov/neengprg.*

Applicants must also submit one paper copy of the work plan as well as the SF–424 and SF424–A by mail or courier with an electronic copy of the work plan by e-mail to *neengprg@epamail.epa.gov.*

Please Note: Only applicants whose proposals are selected by EPA for funding will need to submit additional federal grant forms necessary to process their award. Please do not submit additional forms other than the SF 424, SF 424A and the work plan.

Work Plan

A work plan describes your project. Clearly describe the goal(s) of the project in detail, what measures are to be used to evaluate the success of the project, and the plan for reporting results based on those measures.

Page Limits

Work Plans for Network One Stop Grants should be no more than 15–20 pages in length. Work Plans for Network Readiness Grants should be no more than 5–10 pages in length. Work Plans for Network Challenge Grant should be no more than 10–15 pages in length.

Applicants should ensure that they adequately describe the project they plan to undertake within the page limitation. ''One page'' refers to one side of a single-spaced typed page. The pages must be letter sized (8½ x11 inches), with margins at least one-half inch wide and with normal type size (11 or 12 font).

Confidential Information

Applicants should clearly mark information in their grant proposals that they consider to be confidential. EPA will make final confidentiality decisions in accordance with 40 CFR 2, Subpart B.

Submission of Multiple Grant Proposals

States or Tribes submitting Network One Stop, Network Readiness and/or Network Challenge applications may submit applications at the same time.

Lead Agency

Eligible entities (States and Tribes) should designate a single lead agency (*e.g.*, an agency with responsibility for environmental regulation or management, natural resources, health, agriculture, etc.) to submit the proposal to EPA. Ideally, a proposal would describe the data integration efforts and coordination that has and will take place among various agencies of the State or Tribe. EPA strongly encourages State Environmental, Health, and Natural Resource Agencies to coordinate internally and submit proposals for funding. Ideally, one of these agencies would take the lead for submitting the Network proposal, but clearly demonstrate in the work plan that coordination has taken place among the internal agencies of the State.

That single lead agency will have overall responsibility for developing the grant proposal, submitting the grant application, and managing grant funds from one grant cycle to the next. The lead agency may award sub-grants, contracts, and establish intra-governmental agreements as necessary to implement their work plan.

Quality Assurance Plan (QAP)

If an approved QAP currently exists for data flows being proposed with the application, a copy of the plan should be referenced in the proposal. It is not

necessary to submit a copy of the plan with the proposal.

Proposed projects that will collect, manage, and analyze/access environmental data will be subject to quality assurance and peer review requirements. Environmental Data are any measurements or information that describe environmental processes, location, or condition; ecological or health effects and consequences; or the performance of environmental technology. Environmental data also include information collected directly from measurements, produced from models, and obtained from other sources such as data bases or published literature.

Applicants should allow sufficient time and resources for completing their QAP. Before federal funds will be released, applicants should work with the respective Regional Project Officer as well as the Regional Quality Assurance Manager to develop and implement a QAP that is acceptable to all parties. Additional guidance, as well as a listing of the Regional Quality Assurance Managers, can be found at *http://www.epa.gov/quality.*

Where necessary, recipients may use the template developed for technology grants. A copy of this template can be found at the Network Grants web site *www.epa.gov/neengprg.* Regulations pertaining to quality assurance/quality control requirements can also be found in 40 CFR 30.54 and 31.45.

Funding Vehicle Preference

The grant proposal should indicate whether the applicant prefers receiving grant funds as part of an existing Performance Partnership Grant or as a separate grant.

Part 2—Network One Stop Grants

Eligibility and Availability of Funds

All States and Tribes that have not previously received a One Stop Grant may apply for a One Stop Grant. States are eligible to receive a maximum of $500,000. Tribes are eligible to receive a maximum of $100,000 from the Tribal set-aside funds. Fiscal Year 2003 will be the last year for One Stop Grant Funds availability to States and Tribes as the EPA commitment to continue the One Stop Reporting Program through Fiscal Year 2003 will be met and completed.

Note: A State or Tribe that received funding for a Network Readiness Grant in FY 2002 but has not previously been awarded a Network One Stop Grant will be eligible to apply for a Network One Stop Grant and a Network Readiness Grant in FY 2003. However, a State or Tribe may only receive funding in one category.

Use of Funds

These grants are intended for the purpose of continuing EPA's commitment to offer funding under the One Stop Reporting Partnership Program through 2003. These grant funds are intended to support the broader goals of the One Stop program which are to (1) reduce the reporting burden on industry, States, and local governments; (2) foster multimedia (air, water, waste) and geographic approaches to problem solving; and (3) provide the public with meaningful, real-time access to environmental data.

Particular Requirements

To receive a grant, each State/Tribe must submit a 15–20 page proposal. The proposal should address State/Tribal plans and activities that demonstrate the following:

(1) Senior State/Tribal Leadership (Deputy Commissioner, Commissioner, Chief Information Officer, Governor, and Tribal equivalent) willingness to establish clear accountability for environmental reporting reforms and to participate with EPA and other participants in documenting and communicating the results of the grant.

(2) A commitment to accomplishing burden reduction, data integration, and public access, as indicated by the level of investment in and capacity for environmental data management.

(3) Readiness for full-scale implementation of programs to work toward the following established objectives, as indicated by accomplishments and planned activities.

Integrating State/Tribal/EPA data management—EPA will give special attention to proposals that address the State or Tribe capacity and readiness to implement the cornerstone of integrating environmental data, the facility identifier. This approach is compatible with EPA's Facility Identification data standard, which was finalized in November 2000. Integration of environmental data at the facility level is the primary thrust of the Facility Identification Template for States (FITS2) dated February 2000 and sponsored by ECOS and the EPA (*www.sso.org/ecos/projects*).

Capitalizing on burden reduction opportunities—The measures that EPA is adopting to reduce reporting burden typically require State action to actually achieve the reductions. States/Tribes are not required to immediately and unconditionally implement these policies as a condition for receiving a grant; however, States/Tribes are expected to demonstrate a credible effort to adopt these or other measures for reducing reporting burden as part of their overall reforms.

Employing an inclusive stakeholder process to design and implement reporting and data management reforms—EPA will not specify the form of the stakeholder process or specify requirements for representation. However, it is expected that States/Tribes will devise ways to ensure that local government, industry, environmental and other public interest groups, and the general public have an opportunity to participate in environmental reporting reforms.

Enhancing electronic reporting—The efforts that will take place towards a long term goal of achieving universal access to electronic reporting for the regulated community.

Enhancing public access to environmental performance data—Identify data from what sources, data about regulator performance, and data on environmental status and trends.

Network Transition—Indicate the intent of adopting and adapting longer term efforts to participate on the Network.

A State or Tribe grant proposal must also specify a commitment to produce the major deliverable of the grant which is a comprehensive three to five-year plan to reform environmental reporting and data management. In the past, the plan has been referred to as a 120-Day Plan, since each state awarded a grant was required to submit the plan 120 days following their baseline visit.

The baseline visit was an on-site visit by EPA's information technology experts (staff and consultants) that gave the State's leadership a snapshot of their agency's information opportunities and challenges. EPA will continue to offer this assistance to each State/Tribe awarded a One Stop grant. EPA agrees to participate with the State/Tribe in developing this plan by ensuring the availability of key Agency staff and managers, by providing expert technical support including contractor assistance if required, and by giving prompt attention to State/Tribal requests for policy clarifications and decisions.

The State/Tribe may begin implementation of its work program and expend funds received through this grant during the period in which this plan is being developed.

The plan should include:

a. A statement of State/Tribe goals and objectives for environmental reporting and data management for a three-to-five year period;

b. A description of major outputs over the term of the program plan, projected dates for each major output, and

assignment of responsibility for each project output;

c. A list of key program participants and a description of their roles;

d. An approach for tracking program progress and measuring success during the described period in the plan.

Criteria and Selecting Proposals

The Network One Stop grants are intended to stimulate a partnership with applicants who have decided to undertake a comprehensive re-engineering of their information management process in order to reduce the burden of environmental reporting on the regulated community, integrate agency data and data management processes across program and organizational lines, and improve public access to environmental information.

EPA will focus on: (1) The applicant's commitment to accomplishing the above goals as indicated by their level of investment in and capacity for environmental data management; (2) the applicant's readiness for full-scale implementation of programs to accomplish the above goals over the long term, specifically including standards for identifying and locating regulated facilities across all programs; (3) the applicant's commitment to produce a comprehensive three to five-year plan to reform environmental reporting and data management which clearly identifies the intent to adapt longer term efforts toward participation on the Network; and (4) Senior Leadership commitment.

EPA's Office of Environmental Information (OEI) will form a proposal review panel consisting of representatives from OEI, EPA's American Indian Environmental Office (AIEO), and EPA's Regional Offices. The panel members will separately review and then discuss each proposal. OEI will make final selections based on panel recommendations and feedback on project proposals from Regional Project Coordinators. EPA Headquarters will award and Regional Program Offices will manage these grants.

Part 3—Network Readiness Grants

Eligibility and Availability of Funds

All States and Tribes may apply for a Network Readiness Grant. States are eligible to receive a maximum of $400,000 for a grant. Tribes are eligible to receive a maximum of $100,000 for a grant from the Tribal set-aside funds. States or Tribes awarded a Readiness grant in FY 2002 may submit a Readiness Grant proposal for FY 2003. However, the new work plan must clearly identify how the work will relate to and build upon work planned or accomplished for FY 2002. Applicants must clearly define how the FY 2003 Readiness project complements the FY 2002 Readiness project and how both efforts collectively will advance the applicant's participation in the Network.

Use of Funds

These grants are intended to assist States and Tribes to build upon their priority internal information technology investments while constructing initial linkages to the Network. These grants must be used for work that advances the quality and availability of environmental data, and that produces a material advancement in one or more of the Network's components (Trading Partner Agreements, Data Standards, Data Exchange Templates, technical infrastructure, etc.). Each applicant will provide a work plan that addresses their commitment to participate on the Network and the actual development of a node or portal on the Network.

Particular Requirements

An applicant must produce a comprehensive three-year transition plan that addresses critical steps and milestones that will demonstrate their commitment to participate on the Network. Ideally, the State/Tribe transition plan should align with EPA's Central Data Exchange (CDX) data flow priorities and would demonstrate how the Network data standards, which have been developed by the Environmental Data Standards Council (EDSC), will be implemented. While States and Tribes are not restricted to proposed CDX data flows, they are strongly encouraged to align their proposals with EPA's CDX data flow priority listing. Similarly, States and Tribes are not required to develop and implement the EDSC approved standards but are strongly encouraged to address current or future plans for adopting and implementing the EDSC approved data standards.

For the most current information on CDX flow priorities and status, please refer to the CDX web site at *www.epa.gov/cdx/priority*. The EDSC has approved the following data standards: facility identification, chemical identification, biological taxonomy, date, latitude/longitude, classification of business establishments, permitting, enforcement/compliance, tribal identifiers, and water quality monitoring. *See http://www.epa.gov/edsc/data_standards.html* for more details.

The transition plan must precisely describe and clearly identify which core capacity building functions, based on the list below, the applicant plans to undertake and complete.

(1) Establish an official information source and steward. The establishment will enhance the capacity to identify and manage an official, high quality data source (*e.g.*, at least one source of data in a mature stage of production that is used for agency business, reconciled data across multiple sources using supported keys/linkages, and/or at least one source of data that would likely be used within the Network).

(2) Develop technical infrastructure for Internet node operation that will enhance the technical infrastructure and capabilities needed to support node operation (*e.g.*, web server hardware in production, management of a relational database, IT personnel available to develop, establish, and support State node projects).

(3) Connection of information resources to the node which will extend the range of data sharing, data access, data integration and decision tools to partners on the Network and/or stakeholders in need of access to the information resources.

(4) Node implementation which will establish the agency's single management point for providing its information to the Network.

(5) Node/TPA Management which will enhance the overall management capacity to be a participant on the Network, to execute data exchanges, to establish Trading Partner Agreements, to manage and operate on the Network with adequate and appropriate security protocols, and/or to conduct strategic information and architecture planning.

Eligible activities, which support one or more of the above listed functions, could be, but are not necessarily limited to:

Management Capabilities—consultation services, technical architecture planning and implementation support activities that promote Network participation. These services include: development and implementation of EPA adopted data standards, trading partner agreements, data format design templates and schemas, strategic planning, technical architecture planning, and implementation support activities that promote Network participation.

Technical Infrastructure Capacity—servers, processors, storage devices and storage media, telecommunications products and services, computer peripherals, and other capital expenditure items necessary to assist in the building of or acquiring the necessary technical architecture or infrastructure to be part of and a

participant on the Network. This includes Internet services that assist an organization to participate on the Network, security products and services necessary to safeguard data access on the Internet and Network.

Systems Development—consultant services, software design, development, operations or evaluation services for database management; services for application development and operations; product purchases or development services; and activities that assist in providing the capability to format, store, transform, transmit, manipulate, reconcile and/or improve the quality of data that might be available to the Network. These services, products, and development activities can include functions that support the following: central data exchange services, database management systems, data registries, data integration systems and applications, data access activities, and applications that support the Network.

Geospatial Development—Geographic Information System (GIS) consultation services, infrastructure development, geospatial data acquisition, locational data improvement, planning, data acquisition, and database development that would enhance the ability to integrate and use geospatial information for environmental decision-making and for public access. Activities can include, but are not limited to, functions that would improve locational coordinates for facilities in the Facility Registry System (FRS); documenting the improvements and uploading locational data and metadata through a State or EPA portal; and improving locational data for other point locations (*i.e.*, in addition to FRS facilities), areas, or boundaries needed to carry out EPA, State, Tribal, and/or local environmental programs in accordance with EPA's latitude/longitude data standards and Federal Geographic Data Committee (FGDC) standards. Additional activities might include developing, improving or contributing to efforts for collection of high quality locational data and metadata for specific environmental program areas such as water, air, waste, toxics, pesticides and enforcement for use by EPA, States, Tribes, local, and other federal agencies.

Criteria and Selecting Proposals

EPA will evaluate work plans on how they best address critical steps and milestones that will be taken over the next three years that demonstrate commitment for participation on the Network. Work plans should address the purpose of the project and how it will demonstrate a commitment to participate on the Network by one of the following activities: (1) Establish an official information source and steward; (2) Develop technical infrastructure for Internet node operation; (3) Connection of information resources to a node; (4) Node implementation for providing information to the Network; (5) Node/Trading Partner Agreement and management.

OEI will form a proposal review panel consisting of representatives from OEI, AEIO, and EPA's Regional Offices. The panel members will separately review and then discuss each proposal. OEI will make final selections based on panel recommendations and feedback on project proposals from Regional Offices. EPA Headquarters will award and Regional Program Offices will manage these grants.

Part 4—Network Challenge Grants

Eligibility and Availability of Funds

All States and Tribes may apply for Challenge Grants. States are eligible to receive a maximum of $1,000,000 for a grant. Tribes are eligible to receive a maximum grant of $300,000 from the Tribal set-aside funds.

Use of Funds

Challenge grants will support single State/Tribe or multi-State/Tribe collaborative efforts to advance the Network's development and implementation and create benefits for multiple States/Tribes. Examples of collaborative efforts in the past include the Michigan Technology Assessment and e-DMR XML Pilot and Data Exchange project; the Pacific Northwest Water Quality Data Exchange efforts between Oregon, Alaska, Idaho, and Washington State; and the Multi-Tribe (Confederated Tribes of the Umatilla, the Yakima Nation, and the Nez Perce Tribe) collaborative project for Air Quality Analysis in the Columbia River Gorge. A narrative description of these projects and other Challenge Grants funded in FY 2002 can be found at *http://www.epa.gov/neengprg*. Challenge Grant applicants should review this listing to ensure that they do not propose a similar project but build upon the efforts that are currently funded through the Challenge Grants.

Another example of a collaborative effort could be a multi-State and/or multi-Tribe group that has demonstrated success in data integration. This group would offer to provide active, structured technical assistance to other States and/or Tribes that are beginning their efforts for data integration. The multi-State and/or multi-Tribe group would help the less advanced States and/or Tribes to develop, implement and maintain their information technology/information management program and capabilities, which would then place them in a position to become an active participant in the Network.

Particular Requirements

An applicant must produce a comprehensive proposal that addresses the following:

(1) Critical steps and milestones for the project that will be undertaken and demonstrate commitment to actual development of the project. The project may be media-specific or multi-media in nature.

(2) Explanation of why the proposed project would benefit the Network and data integration. Explain the potential for other States/Tribes to collaborate and learn from the success of the project and the broad applicability for participation in the Network.

(3) Clear definition of project goals and measures. Clearly describe the goal(s) of the project, describe in detail the measures used to evaluate the success of the project, and the plan for reporting results based on the measures. The goal(s) should be stated in terms of the State/Tribe efforts, and the measures should emphasize results and outcomes to be achieved, not just activities or outputs produced.

(4) Clear and detailed description of the strategy. Clearly describe the strategy and how it will address the project identified. The strategy should demonstrate innovative and creative solutions to Network exchanges and should specify the tools or actions to be used, the schedule for implementing the project, the agencies/entities involved in implementing the strategies and their respective roles, and other resources leveraged to address the problem.

Criteria and Selecting Proposals

EPA will evaluate proposals on their feasibility, and on their potential to make a contribution to nationwide Network capacity. The proposals should clearly address how the project would (1) advance the functionality of the Network through the immediate flow of higher quality environmental data; (2) create a model that would be easily implemented, have broad applicability, and would be readily transferable to a wide group of Network participants; (3) achieve a reduction in reporting and accessing burden; (4) provide increased public access to environmental data; and (5) involve collaboration throughout the project.

OEI will form a proposal review panel consisting of representatives from OEI, AIEO, EPA's Regional Offices and

technology experts (federal staff and/or consultants). EPA will make final selections based on panel recommendations and feedback on project proposals. EPA Headquarters will award and Regional Program Offices will manage these grants.

Part 5—Network Administration Grants

Network Administration Funds will be set aside in the amount of $1.5 million.

Section IV. Awarding of Grants

States and Tribes that are selected to receive both a Network One Stop or Network Readiness Grant and a Network Challenge grant may receive the combined grant funds in a single award. However, if a State or Tribe elects to receive the combined grant funds in a single award, it will have to wait until the Network Challenge grant selections are made to be awarded funds. EPA will award funds to those States and Tribes that only apply for the Network One Stop or Network Readiness Grants after final selections are made.

Funds that States or Tribes do not apply for, or ultimately qualify for, under the Network One Stop Grant or the Network Challenge Grant, will be made available through the Network Readiness Grants. EPA reserves the right to reject any application or proposal. For questions concerning grant award decisions please refer to the contact information in Section VII.

Section V. Post Award Requirements

Grant recipients must submit a copy of the semiannual program report to the regional grant manager and the headquarters contact. At a minimum, program reports will include:

—An update on the schedule and status of the implementation of the project, including any implementation problems encountered and suggestions to overcome them;

—An explanation of expenditures to date, and unless the grant is included in the PPG (40 CFR Part 35.530(b) and 40 CFR Part 35.130(b)), expenditures linked to project results; and

—An assessment of progress in meeting project goals, including output and outcome measures when available.

Section VI. Authority & Applicable Regulations

—Subject to Availability: FY 2003 VA–HUD and Independent Agencies Appropriations Bill

—Catalog of Federal Domestic Assistance: 66.608

—Delegation of Authority: 1–47

—40 CFR Part 31 and 40 CFR Part 35, Subpart A and Subpart B apply to this grant program.

Section VII. Points of Contact

Headquarters Contact—Lyn Burger, Office of Environmental Information, Washington, D.C. 20460, Phone, 202–566–1024, FAX, 202–566–1624, E-mail, *neengprg@epamail.epa.gov.*

Regional Contacts

EPA Region I
Mike MacDougall, US EPA Region I, 1 Congress Street, Suite 1100 (RSP), Boston, MA 02114, (617) 918–1941, *macdougall.mike@epa.gov.*

EPA Region II
Robert Simpson, US EPA Region II, 290 Broadway, New York, NY 10007–1866, (212) 637–3335, *simpson.robert@epa.gov.*

EPA Region III
Joseph Kunz, US EPA Region III, 1650 Arch Street, Philadelphia, PA 19103, (215) 814–2116, (215) 814–5251 Fax, *kunz.joseph@epa.gov.*

EPA Region IV
Richard Nawyn, US EPA Region IV, 61 Forsyth Street, Atlanta, GA 30303, (404) 562–8320, *nawyn.richard@epa.gov.*

EPA Region V
Noel Kohl, US EPA Region V, Resource Management Division, 77 W. Jackson Boulevard, Chicago, IL 60604, (312) 886–6224, *kohl.noel@epa.gov.*

EPA Region VI
Dorian Reines, US EPA Region VI, 1445 Ross Ave., US EPA Region X, 1200 6th Avenue (EMI–095), Seattle, WA 98101, (206) 553–1761, *hill.burney@epa.gov.*

Web Site information—*http://www.epa.gov/neengprg.*

[FR Doc. 02–32773 Filed 12–26–02; 8:45 am]

BILLING CODE 6560–50–P

ENVIRONMENTAL PROTECTION AGENCY

[FRL–7431–7]

Environmental Laboratory Advisory Board (ELAB) Meeting Date, and Agenda.

AGENCY: Environmental Protection Agency.

ACTION: Notice of teleconference meeting.

SUMMARY: The Environmental Protection Agency's Environmental Laboratory Advisory Board (ELAB) will have a teleconference meeting on Wednesday, January 22, 2003, at 11 a.m. EST to discuss the ideas, comments, and suggestions presented at the November 21, 2002, ELAB Meeting and Open Forum. Items to be discussed include: (1) Opinions and comments made at the New Mexico ELAB meetings, (2) restructuring of the National Environmental Laboratory Accreditation Conference (NELAC), (3) ELAB budget and expenses, (4) discussion on future ELAB recommendations to EPA, and (5) recommendations for increasing the number of States that are Accrediting Authorities. ELAB is soliciting input from the public on these and other issues related to the National Environmental Laboratory Accreditation Program (NELAP) and the NELAC standards. Written comments on NELAP laboratory accreditation and the NELAC standards are encouraged and should be sent to Mr. Edward Kantor, DFO, U.S. EPA, PO Box 93478, Las Vegas, NV 89193–3478, or faxed to (702) 798–2261, or e-mailed to *kantor.edward@epa.gov.* Members of the public are invited to listen to the teleconference calls and, time permitting, will be allowed to comment on issues discussed during this and previous ELAB meetings. Those persons interested in attending should call Edward Kantor at 702–798–2690 to obtain teleconference information. The number of lines are limited and will be distributed on a first come, first served basis. Preference will be given to a group wishing to attend over a request from an individual.

Dated: December 20, 2002.

John G. Lyon,

Director, Environmental Sciences Division, National Environmental Research Laboratory.

[FR Doc. 02–32774 Filed 12–26–02; 8:45 am]

BILLING CODE 6560–50–P

ENVIRONMENTAL PROTECTION AGENCY

[FRL–7431–8]

Meeting of the Mobile Sources Technical Review Subcommittee

AGENCY: Environmental Protection Agency (EPA).

ACTION: Notice of meeting.

SUMMARY: Pursuant to the Federal Advisory Committee Act, Public Act, Pub. L. 92–463, notice is hereby given that the Mobile Sources Technical Review Subcommittee will meet in February 2003. This is an open meeting. The meeting will include presentations from EPA and other outside organizations. The preliminary agenda for this meeting will be available on the Subcommittee's web site in January. Draft minutes from the previous

meetings are available on the Subcommittee's Web site now at: *http://www.epa.gov/air/caaac/mobile_sources.html.*

DATES: Wednesday, February 12, 2003 from 9 am. to 3:30 pm. Registration begins at 8:30 am.

ADDRESSES: The meeting will be held at the Radisson Hotel Old Town Alexandria, 901 N Fairfax St, Alexandria, VA 22314; (703) 683–6000.

FOR FURTHER INFORMATION CONTACT: *For technical information:* Mr. Barry Garelick, Technical Staff Contact, Transportation and Regional Programs Division, MC: 6406J, U.S. EPA, 1200 Pennsylvania Ave., NW., Washington, DC 20460, Ph: (202) 564–9028; FAX: (202) 565–2085, e-mail; *garelick.barry@epa.gov.*

For logistical and administrative information: Ms. Kim Derksen, FACA Management Officer, U.S. EPA, 2000 Traverwood Drive, Ann Arbor, Michigan, Ph: 734–214–4272; FAX 734–214–4906, e-mail: *derksen.kimberly@epa.gov.*

Background on the work of the Subcommittee is available at: http://transaq.ce.gatech.edu/epatac.

For more current information: *http://epa.gov/air/caaac/mobile_sources.html.*

Individuals or organizations wishing to provide comments to the Subcommittee should submit them to Mr. Garelick at the address above by January 30, 2003. The Mobile Sources Technical Review Subcommittee expects that public statements presented at its meetings will not be repetitive of previously submitted oral or written statements.

SUPPLEMENTARY INFORMATION: During this meeting, the Subcommittee may also hear progress reports from some of its workgroups as well as updates and announcements on activities of general interest to attendees.

Dated: December 20, 2002.

Margo T. Oge,

Director, Office of Transportation and Air Quality.

[FR Doc. 02–32775 Filed 12–26–02; 8:45 am]

BILLING CODE 6560–50–P

ENVIRONMENTAL PROTECTION AGENCY

[FRL–7429–8]

Draft Exposure and Human Health Evaluation of Airborne Pollution From the World Trade Center Disaster and Final Toxicological Effects of Fine Particle Matter Derived From the Destruction of the World Trade Center

AGENCY: Environmental Protection Agency.

ACTION: Notice of availability of a draft document for public review and comment, and notice of availability of a final document.

SUMMARY: The U.S. Environmental Protection Agency's (EPA) Office of Research and Development (ORD) is announcing a 60-day public comment period for the external review draft (ERD) entitled, ''Exposure and Human Health Evaluation of Airborne Pollution from the World Trade Center Disaster (EPA/600/P–02/002A, October 2002).'' This draft document was prepared by ORD's National Center for Environmental Assessment (NCEA). ORD also is announcing the public availability of a final report entitled, ''Toxicological Effects of Fine Particle Matter Derived from the Destruction of the World Trade Center (EPA/600/R–02/028, June 2002),'' hereafter, rodent respiratory toxicological report. This final report was prepared by ORD's National Health and Environmental Effects Research Laboratory (NHEERL).

DATES: The 60-day public comment period on the ERD begins December 27, 2002, and ends February 25, 2003. Technical comments should be in writing and must be postmarked by February 25, 2003. The final rodent respiratory toxicological report is available today.

ADDRESSES: The primary distribution method for the ERD will be via ORD's web site at *http://www.epa.gov/ncea/wtc.htm.* This draft report, in PDF format, can be viewed and downloaded from the Internet for review and comment. In addition, a limited number of CD–ROM and paper copies of the ERD are available by contacting the Technical Information Staff, NCEA–W (8623D), U.S. Environmental Protection Agency, Washington, DC 20460; telephone: 202–564–3261; facsimile: 202–565–0050; email: *nceadc.comment@epa.gov.* Please provide your name, mailing address, and the title and EPA number of the requested publication.

The rodent respiratory toxicological report is also available via ORD's web site at *http://www.epa.gov/nheerl.* A limited number of paper copies are available from EPA's National Service Center for Environmental Publications (NSCEP). To obtain copies, please contact NSCEP by telephone: 1–800–490–9198 or 513–489–8190; facsimile: 513–489–8695, by mail: P.O. Box 42419, Cincinnati, OH 45242–0419. Please provide your name and mailing address and the title and EPA number of the document requested.

COMMENT SUBMISSION: Comments on the ERD may be mailed to the Technical Information Staff, NCEA–W (8623D), U.S. Environmental Protection Agency, Washington, DC 20460; telephone: 202–564–3261; facsimile: 202–565–0050. Comments should be in writing. Please submit one unbound original with pages numbered consecutively, and three copies of the comments. For attachments, provide an index, number pages consecutively with the comments, and submit an unbound original and three copies. Electronic comments may be emailed to: *nceadc.comment@epa.gov.*

Please note that all technical comments received in response to this notice will be placed in a public record. For that reason, commentors should not submit personal information (such as medical data or home address), Confidential Business Information, or information protected by copyright. Due to limited resources, acknowledgments will not be sent.

FOR FURTHER INFORMATION CONTACT: For information on the public comment period, contact the Technical Information Staff of the National Center for Environmental Assessment-Washington by telephone: 202–564–3261; facsimile: 202–565–0050; email: *nceadc.comment@epa.gov.*

SUPPLEMENTARY INFORMATION: Immediately following the September 11, 2001, terrorist attack on New York City's World Trade Center, many federal agencies, including the EPA, were called upon to focus their technical and scientific expertise on the national emergency issues. EPA, other federal agencies, New York City, and New York State public health and environmental authorities focused on numerous air monitoring activities to better understand the ongoing human health impact of the disaster. Many EPA offices and programs quickly became involved with these activities, providing scientific, engineering, public health, and management expertise to help cope with the aftereffects of the collapse of the World Trade Center.

As part of these activities, a human health evaluation of exposure to air

pollutants resulting from the World Trade Center disaster was initiated. The primary purpose and scope of this draft report were to evaluate the environmental levels of various air pollutants to which the public could potentially be exposed as a result of the collapse of the towers. The draft report evaluates the measured outdoor levels of various air pollutants to which the public potentially had been exposed. These data were evaluated in terms of available health benchmark concentrations and typical background concentrations for New York City or other urban areas. The draft evaluation concludes that, with the exception of those exposed immediately following the collapse and perhaps during the next few days, people in the surrounding community are not likely to suffer from serious long- or short-term health effects.

While the primary focus of EPA's draft evaluation is on outdoor levels of various air pollutants to which the public could potentially be exposed as a result of the collapse of the towers, some information on indoor and occupational exposures is summarized in EPA's draft report. The incursion of dust and other contaminants into residences and buildings is being addressed via a number of other studies initiated in conjunction with the plans by EPA and its federal, state, and city partners to clean up residences impacted by the collapse of the World Trade Center.

The draft report also includes a discussion of rodent respiratory toxicology studies, conducted by EPA scientists, that exposed mice to fallen dust samples collected at or near Ground Zero on September 12 and 13, 2001. The purpose of these studies was to evaluate the toxicity of fine particulate matter dust on the respiratory tract of mice and to compare well-studied particulate matter reference samples, ranging from essentially inert to quite toxic, to those collected at the World Trade Center site. These studies found that fine particles were dominated by calcium containing compounds derived from World Trade Center building materials, and that a high exposure to World Trade Center fine particulate matter could cause mild lung inflammation and airflow obstruction in mice. These findings suggest that a similarly high exposure in people could cause short-term respiratory effects such as inflammation and cough.

Further, it is important to note that while this ERD is undergoing public review and comment, a process of external independent expert scientific peer review also is underway. These review processes are the usual steps that EPA takes to ensure full and open participation by interested parties. These steps also help EPA identify areas where a draft document could be improved to strengthen both clarity and completeness of the draft. Comments from the public and from the expert peer reviewers will be used to improve the draft report before it is finalized.

Finally, EPA scientists, in collaboration with other federal and state environmental health professionals, as well as colleagues in academia and medical institutions, will continue to analyze available data on human exposures to environmental contaminants resulting from the World Trade Center disaster. This continuing work will help us to better understand the potential human health impacts.

Dated: December 20, 2002.

Paul Gilman,

Assistant Administrator, Office of Research and Development.

[FR Doc. 02–32600 Filed 12–26–02; 8:45 am]

BILLING CODE 6560–50–P

ENVIRONMENTAL PROTECTION AGENCY

[FRL–OW–7431–4]

Notice of Ambient Aquatic Life Water Quality Criteria for Tributyltin (TBT)—Draft

AGENCY: Environmental Protection Agency (EPA).

ACTION: Notice of availability for ambient aquatic life water quality criteria for tributyltin (TBT)—draft and request for scientific and technical input.

SUMMARY: Section 304(a)(1) of the Clean Water Act (CWA) requires the Environmental Protection Agency (EPA) to develop, and publish and, from time to time, revise criteria for water that accurately reflect the latest scientific knowledge. These criteria represent EPA's current recommendations to States, Territories, and authorized Tribes to use as technical information in establishing their water quality standards as state or tribal law or regulation. Such standards may form the basis for establishing water qualty-based controls. These water quality criteria are not regulations and do not impose legally-binding requirements on EPA, States, Territories, Tribes or the public. Today, EPA is announcing the availability of draft water quality criteria for tributyltin (TBT) for scientific and technical input.

EPA is notifying the public about the request for scientific and technical input on the draft criteria for TBT in accordance with the Agency's process for developing or revising criteria (63 FR 68354, December 10, 1998). As indicated in the December 10, 1998 FR notice, the Agency believes it is important to provide the public with opportunities to submit scientific information on criteria. Today, EPA is asking for input from the public on issues of science related to the information used in deriving the draft TBT criteria. These criteria constitute the Agency's current recommended section 304(a)(1) criteria for TBT. Based on its assessment of information received in response to this announcement and other available information, EPA will publish a notice containing the final criteria and informing the public how the final document can be obtained.

DATES: EPA will accept significant scientific information submitted to the Agency on or before March 27, 2003. You should adequately document any scientific information and provide enough supporting information to indicate that acceptable and scientifically defensible procedures were used and that the results are reliable.

ADDRESSES: Send an original and three copies of any written significant scientific information to W–02–03 Comment Clerk, Water Docket (MC4101T), USEPA, 1200 Pennsylvania Avenue NW., Washington, DC 20460. Information may be hand-delivered to the Water Docket, USEPA, Room B102, 1301 Constitution Avenue NW., Washington, DC 20460. Information may also be submitted electronically to *OW–Docket@epa.gov.* Information should be submitted as a WP5.1, 6.1 and/or 8.0 or an ASCII file with no form of encryption.

Copies of the criteria document entitled, Ambient Aquatic Life Water Quality Criteria for Tributyltin (TBT)—Draft (EPA–822–B–02–001) may be obtained from EPA's Water Resource Center by phone at (202) 566–1729, or by e-mail to *center.water-resource@epa.gov* or by conventional mail to EPA Water Resource Center, RC–4100T, 1200 Pennsylvania Avenue NW., Washington, DC 20460. The document is also available electronically at: *http://www.epa.gov/waterscience/criteria/tributyltin.*

FOR FURTHER INFORMATION CONTACT: Frank Gostomski, Health and Ecological Criteria Division (4304T), U.S. EPA, 1200 Pennsylvania Avenue NW.,

Washington, DC 20460; (202) 566–1105; *gostomski.frank@epa.gov.*

SUPPLEMENTARY INFORMATION:

What Are Recommended Water Quality Criteria?

Recommended water quality criteria are the concentrations of a chemical in water at or below which aquatic life are protected from acute and chronic adverse effects of the chemical. Section 304(a)(1) of the Clean Water Act requires EPA to develop and publish, and from time to time revise, criteria for water accurately reflecting the latest scientific knowledge. Water quality criteria developed under section 304(a) are based solely on data and scientific judgments. They do not consider economic impacts or the technological feasibility of meeting the criteria in ambient water. Section 304(a) criteria provide technical information to States and Tribes in adopting water quality standards and provide a scientific basis for them to develop controls of discharges or releases of pollutants. The criteria also provide a scientific basis for EPA to develop Federally promulgated water quality standards under section 303(c). In this notice, EPA is announcing the publication and availability of EPA's most recent draft recommendations of water quality criteria for TBT and requesting scientific and technical input from the public.

What Is Tributyltin (TBT) and Why Are We Concerned About It?

TBT is one of several organotin compounds with various industrial uses. Environmental exposure occurs mainly from its application as a biocide in antifouling paints applied to ship hulls to keep barnacles and other fouling organisms from attaching to the hull. TBT remains effective over long periods because it is released from the hull into the water column over time. TBT is extremely stable and resistant to natural degradation in water. Because of TBT's high toxicity and the potential exposure of aquatic organisms to it, EPA has developed the following water quality criteria:

Freshwater: Aquatic life should not be affected unacceptably if the: One-hour average concentration of TBT does not exceed 0.46 ug/l more than once every three years on the average (Acute Criterion); and the Four-day average concentration of TBT does not exceed 0.063 ug/l more than once every three years on the average (Chronic Criterion).

Saltwater: Aquatic life should not be affected unacceptably if the: One-hour average concentration of TBT does not exceed 0.38 ug/l more than once every three years on the average (Acute Criterion); and the Four-day average concentration of TBT does not exceed 0.001 ug/l more than once every three years on the average (Chronic Criterion).

Definitions of Criteria Terminology

One hour average: the average of all samples taken during a one hour period by either continuous sampling or periodic grab samples.

Four day average: the average of all samples taken during four consecutive days by either continuous sampling or periodic grab samples. Also known as a 96-hour average.

Acute Criterion: A chemical concentration protective of aquatic organisms from short term exposure to fast acting chemicals or spikes in concentrations. For example exposure of a fish moving through an area for foraging but not residing in the area.

Chronic Criterion: A chemical concentration protective of aquatic organisms from longer term exposure to slower acting chemicals or relatively steady concentrations. For example, exposure of a fish that resides in an area.

Why Is EPA Notifying the Public About the Draft Criteria for TBT?

Today, EPA is requesting scientific and technical input on a new draft of the aquatic life criteria document for TBT. The new draft TBT criteria document incorporates scientific and technical input received in response to a draft criteria document which was announced in the **Federal Register** on August 7, 1997 (62 FR 42554). Based on submitted information and data, EPA has updated the draft recommended aquatic life criteria document for TBT. Today, EPA is soliciting views from the public on issues of science related to the information used to derive the draft criteria. EPA will review and consider significant scientific and technical information submitted by the public that might not have otherwise been identified during development of these draft criteria. Based on this information and any other new information available, EPA will decide whether to revise the draft criteria. EPA will publish a notice containing the final criteria and informing the public how the final document can be obtained.

Where Can I Find More Information on EPA's Revised Process for Developing New or Revised Criteria?

The Agency published detailed information about its revised process for developing and revising criteria in the **Federal Register** on December 10, 1998 (63 FR 68354) and in the EPA document entitled, National Recommended Water Quality-Correction (EPA 822–Z–99–001, April 1999). The purpose of the revised process is to provide expanded opportunities for public input and to make the criteria development process more efficient.

Dated: December 19, 2002.

Geoffrey H. Grubbs,

Director, Office of Science and Technology.

[FR Doc. 02–32771 Filed 12–26–02; 8:45 am]

BILLING CODE 6560–50–P

ENVIRONMENTAL PROTECTION AGENCY

[FRL–OW–7431–3]

Revision of National Recommended Water Quality Criteria

AGENCY: Environmental Protection Agency (EPA).

ACTION: Notice of availability; revision of National Recommended Water Quality Criteria.

SUMMARY: EPA is publishing a revision of fifteen of its national recommended water quality criteria for protecting human health, developed pursuant to section 304(a) of the Clean Water Act (CWA or the Act). This revision is a partial update based on EPA's new methodology for deriving human health criteria. The fifteen criteria included in this notice are: chlorobenzene; cyanide; 1,2-dichlorobenzene; 1,4-dichlorobenzene; 1,1-dichloroethylene; 1,3-dichloropropene; endrin; ethylbenzene; hexachlorocyclopentadiene; lindane; thallium; toluene; 1,2-transdichloroethylene; 1,2,4-trichlorobenzene; and vinyl chloride. EPA is also announcing the availability of an updated national recommended water quality criteria compilation. The updated compilation is available on the Office of Science and Technology's website under Criteria Table (see *http://www.epa.gov/waterscience/humanhealth/*). In the updated compilation, EPA partially revised 83 national recommended water quality criteria for protecting human health. The fifteen criteria in today's Notice are not part of the updated compilation. EPA's recommended water quality criteria provide guidance for States and authorized Tribes to establish water quality standards under the CWA to protect human health and aquatic life. Under the CWA, States and authorized Tribes are to establish water quality standards to protect designated uses. Such standards are used in implementing a number of environmental programs, including

setting discharge limits in National Pollutant Discharge Elimination System (NPSED) permits. Once established an EPA water quality criterion does not substitute for the CWA or EPA's regulations; nor is it a regulation itself. Thus, it cannot impose legally binding requirements on the EPA, States authorized Tribes or the regulated community, and might not apply to a particular situation based upon the circumstances. State and Tribal decision-makers retain the discretion to adopt approaches on a case-by-case basis that differ from EPA's guidance when appropriate.

DATES: EPA will accept scientific views on the fifteen criteria published in this notice until February 25, 2003. Scientific views postmarked after this date may not receive the same consideration.

ADDRESSES: Comments may be submitted electronically, by mail or through hand delivery/courier. Follow the detailed instructions as provided in Section I of the **SUPPLEMENTARY INFORMATION** section. Electronic files may be e-mailed to: *OW–Docket@epa.gov.* You should address comments by mail to the Water Docket (MC–4101T), U.S. EPA, 1200 Pennsylvania Avenue, NW., Washington, DC 20460, Attention Docket ID No. OW–2002–0054. Instructions for couriers and other hand delivery are provided below in Section I.B.3. The Agency will not accept facsimiles (faxes). Send requests for copies of this Federal Register Notice to: U.S. Environmental Protection Agency, National Service Center for Environmental Publications, P.O. Box 42419, Cincinnati, Ohio 45242–2419; telephone: 1–800–490–9198; fax: 513–489–8695. Alternatively, you can find this Federal Register notice on EPA's web site at *http://www.epa.gov/fedrgstr/* on the Internet.

FOR FURTHER INFORMATION CONTACT: Cindy A. Roberts, Health and Ecological Criteria Division (4304T), U.S. EPA, Ariel Rios Building, 1200 Pennsylvania Ave., NW., Washington, DC 20460; (202) 566–1124; *roberts.cindy@epa.gov.*

SUPPLEMENTARY INFORMATION:

I. General Information

A. How Can I Get Copies Of This Document and Other Related Information?

1. Docket. EPA has established an official public docket for this action under Docket ID No. OW–2002–0054. The official public docket consists of the documents specifically referenced in this action and any scientific views received. The public docket does not include Confidential Business Information (CBI) or other information whose disclosure is restricted by statute. The official public docket is the collection of materials that is available for public viewing at the Water Docket in the EPA Docket Center, (EPA/DC) EPA West, Room B102, 1301 Constitution Ave., NW., Washington, DC. The EPA Docket Center Public Reading Room is open from 8:30 a.m. to 4:30 p.m., Monday through Friday, excluding legal holidays. The telephone number for the Public Reading Room is (202) 566–1744, and the telephone number for the Office of Water Docket is (202) 566–2426. A reasonable fee will be charged for copies.

2. Electronic Access. You may access this **Federal Register** document electronically through the EPA Internet under the ''Federal Register'' listings at *http://www.epa.gov/fedrgstr/.*

An electronic version of the public docket is available through EPA's electronic public docket and comment system, EPA Dockets. You may use EPA Dockets at *http://www.epa.gov/edocket/* to submit or read the scientific views, access the index listing of the contents of the official public docket, and to access those documents in the public docket that are available electronically. Once in the system, select ''search,'' then key in the appropriate docket identification number.

Certain types of information will not be placed in the EPA Dockets. Information claimed as CBI and other information whose disclosure is restricted by statute is not included in the official public docket. EPA's policy is that copyrighted material will not be placed in EPA's electronic public docket but will be available only in printed, paper form in the official public docket. To the extent feasible, publicly available docket materials will be made available in EPA's electronic public docket. When a document is selected from the index list in EPA Dockets, the system will identify whether the document is available for viewing in EPA's electronic public docket. Although not all docket materials may be available electronically, you may still access any of the publicly available docket materials through the docket facility identified in Section I.A.1.

For scientific views, it is important to note that EPA's policy is that scientific views, whether submitted electronically or in paper, will be made available for public viewing in EPA's electronic public docket as EPA receives them and without change, unless the views contain copyrighted material or other information whose disclosure is restricted by statute. When EPA identifies a scientific view containing copyrighted material, EPA will provide a reference to that material in the version of the view that is placed in EPA's electronic public docket. The entire printed scientific view, including the copyrighted material, will be available in the public docket.

Scientific views submitted on computer disks that are mailed or delivered to the docket will be transferred to EPA's electronic public docket. Scientific views that are mailed or delivered to the Docket will be scanned and placed in EPA's electronic public docket. Where practical, physical objects will be photographed, and the photograph will be placed in EPA's electronic public docket along with a brief description written by the docket staff.

For additional information about EPA's electronic public docket visit EPA Dockets online or see 67 FR 38102, May 31, 2002.

B. How and To Whom Do I Submit My Scientific Views?

You may submit scientific views electronically, by mail or through hand delivery/courier. To ensure proper receipt by EPA, identify the appropriate docket identification number in the subject line on the first page of your views. Please ensure that your views are submitted within the specified time period. Scientific views received after the close of the stated time period will be marked ''late.'' EPA is not required to consider these late submittals. Do not use EPA Dockets or e-mail to submit CBI or information protected by statute. Commenters who want EPA to acknowledge receipt of their submittals should include a self-addressed stamped envelope.

1. *Electronically.* If you submit electronic input as prescribed below, EPA recommends that you include your name, mailing address, and an e-mail address or other contact information in the body of your scientific views. Also include this contact information on the outside of any disk or CD ROM you submit, and in any cover letter accompanying the disk or CD ROM. This ensures that you can be identified as the submitter of the input and allows EPA to contact you in case EPA cannot read your views due to technical difficulties or needs further information on the substance of your views. EPA's policy is that EPA will not edit your scientific views, and any identifying or contact information provided in the body of a view will be included as part of the input that is placed in the official public docket, and made available in

EPA's electronic public docket. If EPA cannot read your views due to technical difficulties and cannot contact you for clarification, EPA may not be able to consider your views.

i. *EPA Dockets.* Your use of EPA's electronic public docket to submit scientific views to EPA electronically is EPA's preferred method for receiving scientific views. Go directly to EPA Dockets at *http://www.epa.gov/edocket/* and follow the online instructions for submitting input. To access EPA's electronic public docket from the EPA Internet Home Page, select ''Information Sources,'' ''Dockets,'' and ''EPA Dockets.'' Once in the system, select ''search,'' and then key in Docket ID No. OW–2002–0054. The system is an ''anonymous access'' system, which means EPA will not know your identity, e-mail address, or other contact information unless you provide it in the body of your input.

ii. *E-mail.* Scientific views may be sent by electronic mail (e-mail) to: *OW–Docket@epa.gov,* Attention Docket ID No. OW–2002–0054. In contrast to EPA's electronic public docket, EPA's e-mail system is not an ''anonymous access'' system. If you send an e-mail scientific view directly to the Docket without going through EPA's electronic public docket, EPA's e-mail system automatically captures your e-mail address. E-mail addresses that are automatically captured by EPA's e-mail system are included as part of the views that are placed in the official public docket, and made available in EPA's electronic public docket.

iii. *Disk or CD ROM.* You may submit scientific views on a disk or CD ROM that you mail to the mailing address identified in Section I.A.1. The disk or CD ROM input of scientific views must be submitted as a WordPerfect 9, or higher, file or as an ASCII file format. Avoid the use of special characters and any form of encryption.

2. *By Mail.* Send an original and three copies of all scientific views and any enclosures, including references, on the fifteen criteria addressed to the Water Docket (MC–4101T), U.S. EPA, 1200 Pennsylvania Avenue, NW., Washington, D.C. 20460, Attention Docket ID No. OW–2002–0054.

3. *By Hand Delivery or Courier.* Deliver your scientific views to: EPA Docket Center, (EPA/DC) EPA West, Room B102, 1301 Constitution Ave., NW., Washington, DC, Attention Docket ID No. OW–2002–0054. Such deliveries are only accepted during the Docket's normal hours of operation as identified in Section I.A.1.

C. What Should I Consider as I Prepare My Scientific Views for EPA?

You may find the following suggestions helpful for preparing your scientific views:

1. Explain your views as clearly as possible.
2. Describe any assumptions that you used.
3. Provide any technical information and/or data you used that support your views.
4. If you estimate potential burden or costs, explain how you arrived at your estimate.
5. Provide specific examples to illustrate your concerns.
6. Offer alternatives.
7. Make sure to submit your scientific views by the time period deadline identified.
8. To ensure proper receipt by EPA, identify the appropriate docket identification number in the subject line on the first page of your response. It would also be helpful if you provided the name, date, and **Federal Register** citation related to your views.

II. What Are Water Quality Criteria?

Water quality criteria are scientifically derived numeric values that protect aquatic life or human health from the deleterious effects of pollutants in ambient water.

Section 304(a)(1) of the Clean Water Act requires EPA to develop and publish and, from time to time, revise, criteria for water quality accurately reflecting the latest scientific knowledge. Water quality criteria developed under section 304(a) are based solely on data and scientific judgments on the relationship between pollutant concentrations and environmental and human health effects. Section 304(a) criteria do not reflect consideration of economic impacts or the technological feasibility of meeting the chemical concentrations in ambient water. Section 304(a) criteria provide guidance to States and authorized Tribes in adopting water quality standards that ultimately provide a basis for controlling discharges or releases of pollutants. The criteria also provide guidance to EPA when promulgating federal regulations under section 303(c) when such action is necessary.

III. What Are the Criteria Revisions?

EPA is today publishing an update of the following fifteen national recommended water quality criteria (NRWQC) for protecting human health: chlorobenzene; cyanide; 1,2-dichlorobenzene; 1,4-dichlorobenzene; 1,1-dichloroethylene; 1,3-dichloropropene; endrin; ethylbenzene; hexachlorocyclopentadiene; lindane; thallium; toluene; 1,2-transdichloroethylene; 1,2,4-trichlorobenzene; and vinyl chloride. These revisions are based on EPA's new methodology for deriving human health criteria (*See: Methodology for Deriving Ambient Water Quality Criteria for the Protection of Human Health* (2000), EPA–822–B–00–004, October 2000). The revised methodology describes the Agency's current approach for deriving national recommended water quality criteria to protect human health.

The revision of these criteria represents a partial update of the 304(a) criteria as described in both the draft Methodology revisions and the **Federal Register** Notice that accompanied the final Methodology (65 FR 66444). EPA believes that updating a limited number of components for which there are available data or improved science (*i.e.*, a partial update) is a reasonable and efficient means of publishing revised 304(a) criteria more frequently. EPA has also previously described its process for publishing revised criteria [see National Recommended Water Quality Criteria—Correction (64 FR 19781; or EPA 822–Z–99–001) or the **Federal Register** Notice for the final Methodology (65 FR 66444)]. EPA specifically stated that when making minor revisions to existing criteria based on new information pertaining to individual components of the criteria, it will publish the recalculated criteria directly as the Agency's national recommended water quality criteria. Because recalculation of these fifteen criteria result in significant changes, EPA is publishing them in today's Notice in order to solicit scientific views as indicated in the previously published process. However, EPA does not intend to subject these recalculations to additional peer review because all of the new components used in the recalculations have been previously reviewed. A calculation matrix containing the components (*e.g.*, cancer dose-response assessment, reference dose and relative source contribution) used to derive the criteria in this compilation was prepared to assist reviewers and is available from the docket described in the **SUPPLEMENTARY INFORMATION** section. No information has been presented for the first time as part of today's action. The fifteen revised criteria are included in Table 1.

TABLE 1.—REVISED HUMAN HEALTH CRITERIA

Priority pollutant	CAS No.	Human health for Consumption of:		Components
		Water + organism (ug/L)	Organism only (ug/L)	
Thallium	7440280	0.24	0.47	RfD = 6.8E–5 BCF = 116 (RFD LISTED IS FOR THALLIUM (I) SULFATE 7446–18–6) RSC = 20% FI = 17.5
Cyanide	57125	140	16,000	RfD = 2E–2 BCF = 1 RSC = 20% FI = 17.5
Chlorobenzene	108907	130	1,600	RfD = 2E–2 BCF = 10.3 RSC = 20 % FI = 17.5
1,1-Dichloroethylene	75354	330	7,100	RfD = 5E–2 RSC = 20 % BCF = 5.6 FI = 17.5
1,3-Dichloropropene	542756	0.34	21	q1* = 0.1 BCF = 1.9 FI = 17.5
Ethylbenzene	100414	530	2,100	RfD = 1E–1 BCF = 37.5 RSC = 20% FI = 17.5
Toluene	108883	1,300	15,000	RfD = 2E–1 BCF = 10.7 RSC = 20% FI = 17.5
1,2-Trans-Dichloro-ethylene	156605	140	10,000	RfD = 2E–2 BCF = 1.58 RSC = 20% FI = 17.5
Vinyl Chloride	75014	0.025	2.4	q1* = 1.4 (LMS exposure from birth) BCF = 1.17 FI = 17.5
1,2-Dichlorobenzene	95501	420	1,300	RfD = 9E–2 BCF = 55.6 RSC = 20% FI = 17.5
1,4-Dichlorobenzene	106467	63	190	ADI = 1.34E–2 (ADI for 1,2-DCB used) BCF = 55.6 RSC = 20% FI = 17.5
Hexachlorocyclo-pentadiene	77474	40	1,100	RfD = 6E–3 BCF = 4.34 RSC = 20% FI = 17.5
1,2,4-Trichloro-benzene	120821	35	70	RfD = 1E–2 BCF = 114 RSC = 20% FI = 17.5
gamma-BHC (Lindane)	58899	0.98	1.8	RfD= 3E–4 BCF = 130 RSC= 20% FI = 17.5
Endrin	72208	0.059	0.060	RfD = 3E–4 BCF = 3970 RSC = 20% FI = 17.5

EPA received much support for revising criteria based on partially updated components of the criteria equations as a way of increasing the frequency of scientific improvements to the nationally recommended criteria that currently-available information would allow. For a water quality criterion revision based on a partial update to be considered acceptable to EPA, a component of the criterion (*e.g.*, the toxicological risk assessment) should be comprehensive (*e.g.*, a new or revised RfD or cancer dose-response assessment, as opposed to simply a new scaling factor), stand alone and be based on new national or local data. The recalculation of all fifteen water quality criteria integrates the updated national default freshwater/estuarine fish consumption rate of 17.5 grams/day. Thirteen of the criteria integrate a previously-determined relative source contribution (RSC) value from the national primary drinking water standards for the same chemicals. EPA also incorporated into the recalculations a new cancer potency factor (q1*) for 1,3-dichloropropene and vinyl chloride, and a new reference dose (RfD) for 1,1-dichloroethylene, hexachlorocyclopentadiene and lindane. These values have already been published in the Agency's Integrated Risk Information System (IRIS). Both an RfD and q1* are available in IRIS for 1,3-dichloropropene and vinyl chloride. EPA used the q1* to derive the criteria in these cases rather than the RfD because it resulted in more protective criteria.

Today's revisions of the water quality criteria used the bioconcentration factor (BCF) or field-measured BAF developed using the 1980 Methodology. The BCFs used in deriving today's criteria are consistent with the BCFs used in promulgating human health criteria for priority toxic pollutants in rules such as the 1992 National Toxics Rule and the 2000 California Toxics Rule.

EPA has partially revised 83 additional human health criteria which are available on the Office of Science and Technology's website under Criteria Table (see *http://www.epa.gov/waterscience/humanhealth/*). Again, as previously described, EPA has published the compilation including the 83 recalculated criteria directly as the Agency's national recommended water quality criteria because the updates result in minor changes.

IV. What Is the Relationship Between the Water Quality Criteria and Your State or Tribal Water Quality Standards?

As part of the water quality standards triennial review process defined in section 303(c)(1) of the CWA, the States and authorized Tribes are responsible for maintaining and revising water quality standards. Water quality standards consist of designated uses, water quality criteria to protect those uses, a policy for antidegradation, and general policies for application and implementation. Section 303(c)(1) requires States and authorized Tribes to review and modify, if appropriate, their water quality standards at least once every three years.

States and authorized Tribes must adopt water quality criteria that protect designated uses. Protective criteria are based on a sound scientific rationale and contain sufficient parameters or constituents to protect the designated uses. Criteria may be expressed in either narrative or numeric form. States and authorized Tribes have four options when adopting water quality criteria for which EPA has published section 304(a) criteria. They can:

(1) Establish numerical values based on recommended section 304(a) criteria;

(2) Adopt section 304(a) criteria modified to reflect site specific conditions;

(3) Adopt criteria derived using other scientifically defensible methods; or

(4) Establish narrative criteria where numeric criteria cannot be determined (40 CFR 131.11).

Consistent with 40 CFR 131.21 (see: *EPA Review and Approval of State and Tribal Water Quality Standards* (65 FR 24641, April 27, 2000)), water quality criteria adopted by law or regulation by States and authorized Tribes prior to May 30, 2000, are in effect for CWA purposes unless superseded by federal regulations (see, for example, the N*ational Toxics Rule,* 40 CFR 131.36; *Water Quality Standards for Idaho,* 40 CFR 131.33). New or revised water quality criteria adopted into law or regulation by States and authorized Tribes on or after May 30, 2000 are in effect for CWA purposes only after EPA approval.

V. What Is the Status of Existing Recommended Criteria While They Are Under Revision?

Water quality criteria published by EPA remain the Agency's recommended water quality criteria until EPA revises or withdraws the criteria. For example, while undertaking recent reassessments of dioxin and other chemicals, EPA has consistently supported the use of the current section 304(a) criteria for these chemicals and considers them to be scientifically sound until the Agency reevaluates the 304(a) criteria, subjects the criteria to appropriate peer review, and publishes revised 304(a) criteria.

VI. Where Can I Find More Information About Water Quality Criteria and Water Quality Standards?

For more information about water quality criteria and Water Quality Standards refer to the following: Water Quality Standards Handbook (EPA 823-B94–005a); Advanced Notice of Proposed Rule Making (ANPRM), (63FR36742); Water Quality Criteria and Standards Plan—Priorities for the Future (EPA 822–R–98–003); Guidelines and Methodologies Used in the Preparation of Health Effects Assessment Chapters of the Consent Decree Water Criteria Documents (45FR79347); Methodology for Deriving Ambient Water Quality Criteria for the Protection of Human Health (2000), EPA–822–B–00–004, October 2000); Guidelines for Deriving Numerical National Water Quality Criteria for the Protection of Aquatic Organisms and Their Uses (EPA 822/R–85–100); National Strategy for the Development of Regional Nutrient Criteria (EPA 822–R–98–002); and EPA Review and Approval of State and Tribal Water Quality Standards (65 FR 24641).

You can find these publications through EPA's National Service Center for Environmental Publications (NSCEP, previously NCEPI) or on the Office of Science and Technology's Home-page (*http://www.epa.gov/waterscience*).

Dated: December 19, 2002.

Geoffrey H. Grubbs,

Director, Office of Science and Technology.

[FR Doc. 02–32770 Filed 12–26–02; 8:45 am]

BILLING CODE 6560–50–P

FEDERAL COMMUNICATIONS COMMISSION

[WC Docket No. 02–306; FCC 02–330]

Application by SBC Communications Inc., Pacific Bell Telephone Company, and Southwestern Bell Communications Services, Inc., for Authorization To Provide In-Region, InterLATA Services in California

AGENCY: Federal Communications Commission.

ACTION: Notice.

SUMMARY: In the document, the Federal Communications Commission (Commission) grants the section 271

application of SBC Communications Inc., Pacific Bell Telephone Company, and Southwestern Bell Communications Services, Inc., (Pacific Bell) for authority to enter the interLATA telecommunications market in the state of California. The Commission grants Pacific Bell's application based on its conclusion that Pacific Bell has satisfied all of the statutory requirements for entry, and opened its local exchange markets to full competition.

DATES: Effective December 30, 2002.

FOR FURTHER INFORMATION CONTACT: Renee R. Crittendon, Senior Attorney Advisor, Wireline Competition Bureau, at (202) 418–2352 or via the Internet at *rcritten@fcc.gov.* The complete text of this Memorandum Opinion and Order is available for inspection and copying during normal business hours in the FCC Reference Information Center, Portals II, 445 12th Street, SW, Room CY–A257, Washington, DC 20554. Further information may also be obtained by calling the Wireline Competition Bureau's TTY number: (202) 418–0484.

SUPPLEMENTARY INFORMATION: This is a summary of the Commission's Memorandum Opinion and Order in WC Docket No. 02–306, FCC 02–330, adopted December 19, 2002, and released December 19, 2002. The full text of this order may be purchased from the Commission's duplicating contractor, Qualex International, Portals II, 445 12th Street, SW, Room CY–B402, Washington, DC 20554, telephone 202–863–2893, facsimile 202–863–2898, or via e-mail *qualexint@aol.com.* It is also available on the Commission's Web site at *http://www.fcc.gov/Bureaus/Common_Carrier/in-region_applications/sbc_ca/welcome.html.*

Synopsis of the Order

1. *History of the Application.* On September 20, 2002, Pacific filed an application, pursuant to section 271 of the Telecommunications Act of 1996, with the Commission to provide in-region, interLATA service in the state of California.

2. *The California Public Utilities Commission Order.* The California Public Utilities Commission (California Commission) determined that Pacific Bell had successfully complied with 12 of the 14 checklist items. The California Commission also emphasized that Pacific Bell had successfully passed the independent third party test of its operations support systems (OSS) and noted the strong performance results Pacific Bell has achieved across many service categories. The California Commission withheld approval of checklist item 11 (number portability) and checklist item 14 (resale). According to the California Commission, Pacific Bell did not demonstrate its compliance with the number portability requirements for failure to implement a mechanized Number Portability Administration Center (NPAC) check process in time to review its efficacy. With regard to the resale requirements of checklist item 14, the California Commission concluded that Pacific Bell did not comply with its resale obligation with respect to its advanced services. Finally, based on its analysis of section 709.2 of the California Public Utilities Code, the California Commission determined that, although Pacific Bell met most of the technical requirements under section 271, it could not support Pacific's entry into the long distance market as beneficial to the public interest. On December 12, 2002, the California Commission issued a draft Final Decision on the Public Utilities Code Section 709.2(c) inquiry, in which it granted Pacific Bell authority to operate and provide intrastate interexchange telecommunications services upon receipt of full authorization from the FCC pursuant to section 271.

3. *The Department of Justice's Evaluation.* The Department of Justice filed its evaluation of Pacific Bell's application on October 29, 2002 in which it recommended approval of the application. The Department of Justice noted that the California Commission's decision regarding checklist items 11 and 14 did not appear to preclude approval of Pacific Bell's application. The Department also expressed concern regarding TELRIC pricing and the true-up mechanism that Pacific Bell proposed for use in California. While the Department of Justice supported approval of Pacific Bell's application, based on the current record, it noted its conclusions were subject to the Commission's review of certain concerns expressed in its evaluation.

Primary Issues in Dispute

4. *Checklist Item 2—Unbundled Network Elements.* Based on the record, the Commission finds that Pacific Bell has provided ''nondiscriminatory access to network elements in accordance with the requirements of sections 251(c)(3) and 252(d)(1)'' of the Act in compliance with checklist item 2.

5. The Commission finds that Pacific Bell's UNE rates in California are just, reasonable, and nondiscriminatory, and are based on cost plus a reasonable profit as required by section 252(d)(1). Thus, Pacific Bell's UNE rates in California satisfy checklist item 2. The Commission has previously held that it will not conduct a *de novo* review of a state's pricing determinations and will reject an application only if either ''basic TELRIC principles are violated or the state commission makes clear errors in factual findings on matters so substantial that the end result falls outside the range that a reasonable application of TELRIC principles would produce.'' The California Commission concluded that Pacific Bell's UNE rates satisfy checklist item 2. While the Commission has not conducted a *de novo* review of the California Commission's pricing determinations, the Commission has followed the urging of the Department of Justice to examine commenters' complaints regarding UNE pricing.

6. The Commission reviewed commenters' criticism of issues including rates for switching, loops and non-loops, vertical features, dedicated transport, and DS1 and DS3 loops, as well as nonrecurring charges. The Commission also investigated issues regarding the interim nature of switching and loop rates, Pacific Bell's true-up commitment, and the comparison of Pacific Bell's UNE rates in California to SBC's rates in Texas as part of our benchmark analysis. After carefully reviewing these complaints, the Commission concludes that the California Commission followed basic TELRIC principles and the complaints do not support a finding that the California Commission committed clear error. Thus, the Commission concludes that Pacific Bell's UNE rates in California satisfy the requirements of checklist item 2.

7. The Commission also concludes that Pacific Bell meets it obligation to provide access to its OSS—the systems, databases, and personnel necessary to support the network elements or services. Nondiscriminatory access to OSS ensures that new entrants have the ability to order service for their customers and communicate effectively with Pacific Bell regarding basic activities such as placing orders and providing maintenance and repair services for customers. The Commission finds that, for each of the primary OSS functions (pre-ordering, ordering, provisioning, maintenance and repair, and billing, as well as change management and technical assistance), Pacific Bell provides access that enables competing carriers to perform the functions in substantially the same time and manner as Pacific Bell or, if there is not an appropriate retail analogue in Pacific Bell's systems, in a manner that

permits an efficient competitor a meaningful opportunity to compete.

8. Pursuant to this checklist item, Pacific Bell must also provide nondiscriminatory access to network elements in a manner that allows other carriers to combine such elements, and demonstrate that it does not separate already combined elements, except at the specific request of a competing carrier. Based on the evidence in the record, and upon Pacific Bell's legal obligations under interconnection agreements, Pacific Bell demonstrates that it provides to competitors combinations of already-combined network elements as well as nondiscriminatory access to unbundled network elements in a manner that allows competing carriers to combine those elements themselves.

9. *Checklist Item 11—Local Number Portability.* Based on the record, the Commission finds, notwithstanding the California Commission's determination that Pacific Bell failed to comply with checklist item 11 for failing to implement a mechanized Number Portability Administration Center check process, that Pacific Bell meets its requirement to provide, to the extent technically feasible, number portability in accordance with requirements prescribed by the Commission. Pacific Bell demonstrates that it makes local number portability available to competitive LECs through interconnection agreements and in conformance with the Commission's rules.

10. *Checklist Item 14—Resale.* Based on the evidence in the record, the Commission concludes that Pacific Bell demonstrates that it makes telecommunications services including DSL resale, available in California for resale, in accordance with sections 251(c)(4) and section 252(d)(3) and, thus, satisfies the requirements for checklist item 14. Although we note that the California Commission concluded that Pacific Bell had erected unreasonable barriers to entry in California's DSL market by not complying with its resale obligations with respect to advanced services and by offering certain restrictive conditions, based on a full review of the record, we conclude that Pacific Bell demonstrates compliance with checklist item 14.

Other Checklist Items

11. *Checklist Item 1—Interconnection.* Based on the evidence in the record, the Commission finds that PacBell demonstrates that it provides interconnection in accordance with the requirements of section 251(c)(2), and as specified in section 271 and applied in the Commission's prior orders.

12. Pacific Bell also demonstrates that its collocation offerings in California satisfy the requirements of sections 251 and 271 of the Act. Pacific Bell demonstrates that it offers interconnection in California to other telecommunications carriers at just, reasonable, and nondiscriminatory rates, in compliance with checklist item 1.

13. *Checklist Item 4—Unbundled Local Loops.* The Commission concludes that Pacific Bell provides unbundled local loops in accordance with the requirements of section 271 and our rules. Our conclusion is based on our review of Pacific Bell's performance for all loop types, which include voice-grade loops, xDSL-capable loops, digital loops, high-capacity loops, as well as our review of Pacific Bell's processes for hot cut provisioning, and line sharing and line splitting.

14. *Checklist Item 5—Unbundled Transport.* Section 271(c)(2)(B)(v) of the competitive checklist requires a BOC to provide ''local transport from the trunk side of a wireline local exchange carrier switch unbundled from switching or other services.'' The Commission concludes, based upon the evidence in the record, that Pacific Bell demonstrates that it provides unbundled local transport, in compliance with the requirements of checklist item 5.

15. *Checklist Item 13—Reciprocal Compensation.* Section 271 (c)(2)(B)(iii) of the Act requires that a BOC enter into ''[r]eciprocal compensation arrangements in accordance with the requirements of section 252(d)(2).'' In turn, section 252(d)(2)(A) specifies when a state commission may consider the terms and conditions for reciprocal compensation to be just and reasonable. Based on the record, we conclude that Pacific Bell demonstrates that it provides reciprocal compensation as required by the Act.

16. *Checklist Items 3, 6, 7, 8, 9, 10 and 12.* An applicant under section 271 must demonstrate that it complies with checklist item 3 (poles, ducts, and conduits), item 6 (unbundled local switching), item 7 (911/E911 access and directory assistance/operator services), item 8 (white pages), item 9 (numbering administration), item 10 (databases and signaling), and item 12 (dialing parity). Based on the evidence in the record, and in accordance with Commission rules and orders concerning compliance with section 271 of the Act, the Commission concludes that Pacific Bell demonstrates that it is in compliance with checklist items 3, 6, 7, 8, 9, 10, and 12 in California. The California Commission also concluded that Pacific Bell complies with the requirements of each of these checklist items.

Other Statutory Requirements

17. *Compliance with Section 271(c)(1)(A).* The Commission concludes that Pacific Bell demonstrates that it satisfies the requirements of section 271(c)(1)(A) based on the interconnection agreements it has implemented with competing carriers in the state of California. The record demonstrates that competitive LECs serve some business and residential customers, either exclusively or predominantly over their own facilities.

18. *Section 272 Compliance.* Pacific Bell provides evidence that it maintains the same structural separation and nondiscrimination safeguards in California as it does in Texas, Missouri, Arkansas, Kansas, and Oklahoma where SBC has already received section 271 authority. Based on the record before us, we conclude that Pacific Bell has demonstrated that it will comply with the requirements of section 272.

19. *Public Interest Analysis.* The Commission concludes that approval of this application is consistent with the public interest. It views the public interest requirement as an opportunity to review the circumstances presented by the applications to ensure that no other relevant factors exist that would frustrate the congressional intent that markets be open, as required by the competitive checklist, and that entry will therefore serve the public interest as Congress expected. While no one factor is dispositive in this analysis, the Commission's overriding goal is to ensure that nothing undermines its conclusion that markets are open to competition.

20. The Commission finds that, consistent with its extensive review of the competitive checklist, barriers to competitive entry in the local market have been removed and the local exchange market today is open to competition. We note that the California Commission determined that it could not support Pacific Bell's entry in the long distance market as beneficial to the public interest under its state public interest inquiry, under section 709.2 of the California Public Utilities Code. However, we conclude that, while the state retains authority to enforce obligations and safeguards relating to a BOC's provision of intrastate interLATA services, the relevant standard applied is a federal one, as set forth in the Act. Nevertheless, having fully considered the facts and circumstances identified

by the California Commission (to the extent they could independently establish a public interest concern cognizable by this Commission), we conclude that Pacific Bell's entry into the long distance market will benefit consumers and competition.

21. We also note that commenters urge the Commission to perform a price squeeze analysis regarding rates for DS1 and DS3 loops, DSL transport, and payphone lines. The Commission has reviewed the commenters' evidence of a price squeeze, however, and determined that, even if the Commission accepted their assertions that a price squeeze analysis is mandated by section 271's public interest requirement, no price squeeze is present here. The commenters' price squeeze claims are insufficient to demonstrate the existence of a price squeeze that dooms them to failure under the standard articulated by the D.C. Circuit in *Sprint* v. *FCC.* Therefore, the Commission concludes that there is no evidence in the record that warrants disapproval of this application based on allegations of a price squeeze, whether couched as discrimination under checklist item 2 or a violation of the public interest standard.

22. The Commission also finds that the performance monitoring and enforcement mechanisms developed in California, in combination with other factors, provide meaningful assurance that Pacific Bell continue to satisfy the requirements of section 271 after entering the long distance market.

23. The Commission concludes that approval of this application is consistent with the public interest. From our extensive review of the competitive checklist, which embodies the critical elements of market entry under the Act, we find that barriers to competitive entry in California's local exchange market have been removed, and that the local exchange market is open to competition.

24. *Section 271(d)(6) Enforcement Authority.* The Commission concludes that, working with the California Commission, we will closely monitor Pacific Bell's post-approval compliance to ensure that Pacific Bell does not ''cease[] to meet the conditions required for [section 271] approval.'' We stand ready to exercise our various statutory enforcement powers quickly and decisively if there is evidence that market opening conditions have not been sustained.

Federal Communications Commission.

William F. Caton,

Deputy Secretary.

[FR Doc. 02–32650 Filed 12–26–02; 8:45 am]

BILLING CODE 6712–01–P

FEDERAL COMMUNICATIONS COMMISSION

[WC Docket No. 02–307; FCC 02–331]

Joint Application by BellSouth Corporation, BellSouth Telecommunications, Inc., and BellSouth Long Distance, Inc. for Provision of In-Region, InterLATA Services in Florida and Tennessee

AGENCY: Federal Communications Commission.

ACTION: Notice.

SUMMARY: In the document, the Federal Communications Commission (Commission) grants the section 271 application of BellSouth Corporation, *et al.* (BellSouth) for authority to enter the interLATA telecommunications market in the states of Florida and Tennessee. The Commission grants BellSouth's application based on its conclusion that BellSouth has satisfied all of the statutory requirements for entry, and opened its local exchange markets to full competition.

DATES: Effective December 30, 2002.

FOR FURTHER INFORMATION CONTACT: Christine Newcomb, Attorney-Advisor, Wireline Competition Bureau, at (202) 418–1573 or via the Internet at *cnewcomb@fcc.gov.* The complete text of this Memorandum Opinion and Order is available for inspection and copying during normal business hours in the FCC Reference Information Center, Portals II, 445 12th Street, SW., Room CY–A257, Washington, DC 20554. Further information may also be obtained by calling the Wireline Competition Bureau's TTY number: (202) 418–0484.

SUPPLEMENTARY INFORMATION: This is a summary of the Commission's Memorandum Opinion and Order in WC Docket No. 02–307, FCC 02–331, adopted December 18, 2002, and released December 19, 2002. The full text of this order may be purchased from the Commission's duplicating contractor, Qualex International, Portals II, 445 12th Street, SW., Room CY–B402, Washington, DC 20554, telephone 202–863–2893, facsimile 202–863–2898, or via e-mail *qualexint@aol.com.* It is also available on the Commission's Web site at *http://www.fcc.gov/Bureaus/Wireline_Competition/in-region_applications.*

Synopsis of the Order

1. *History of the Application.* On September 20, 2002, BellSouth filed an application, pursuant to section 271 of the Telecommunications Act of 1996, with the Commission to provide in-region, interLATA service in the states of Florida and Tennessee.

2. *The State Commissions' Evaluations.* The Florida Public Service Commission (Florida Commission), and the Tennessee Regulatory Authority (Tennessee Authority) (collectively, state commissions), following an extensive review process over a number of years, advised the Commission that BellSouth had met the checklist requirements of section 271 and has taken the statutorily required steps to open its local markets in each state to competition. Consequently, the state commissions recommended that the Commission approve BellSouth's in-region, interLATA entry in their evaluations and comments in this proceeding.

3. *The Department of Justice's Evaluation.* The Department of Justice filed its evaluation of BellSouth's application on October 10, 2002. It recommended approval of the application subject to the Commission's resolving certain concerns expressed by the Department of Justice, specifically, BellSouth's change management process for operations support systems (OSS), and its policy on restating erroneously reported performance data.

4. *Compliance with Section 271(c)(1)(A).* The Commission concludes that BellSouth demonstrates that it satisfies the requirements of section 271(c)(1)(A) based on the interconnection agreements it has implemented with competing carriers in Florida and Tennessee. The record demonstrates that competitive LECs serve some business and residential customers using predominantly their own facilities in each of the states.

Primary Issues in Dispute

5. *Checklist Item 2—Unbundled Network Elements.* Based on the record, the Commission finds that BellSouth has provided ''nondiscriminatory access to network elements in accordance with the requirements of sections 251(c)(3) and 252(d)(1)'' of the Act in compliance with checklist item 2.

6. The Commission finds that BellSouth's UNE rates in Florida and Tennessee are just, reasonable, and nondiscriminatory, and are based on cost plus a reasonable profit as required by section 252(d)(1). Thus, BellSouth's UNE rates in Florida and Tennessee satisfy checklist item 2. The

Commission has previously noted that different states may reach different results that are each within the range of what a reasonable application of TELRIC principles would produce. After reviewing commenters' criticisms of BellSouth's hot cut charges for SL–2 loops, expedite order charge, promotional tariffs, inflation recovery methodology, and loading factors, the Commission concludes that Florida and Tennessee Commissions followed basis TELRIC principles and there is insufficient evidence to demonstrate that the state commissions committed clear error.

7. Pursuant to this checklist item, the Commission finds that BellSouth also provides nondiscriminatory access to network elements in a manner that allows other carriers to combine such elements themselves. In addition, BellSouth demonstrates that it provides to competitors combinations of already-combined network elements. Accordingly, BellSouth provides UNEs, including UNE combinations, in the two states in the same manner as the Commission approved in Georgia and Louisiana.

8. The Commission also concludes that BellSouth meets its obligation to provide access to its OSS—the systems, databases and personnel necessary to support network elements or services. Based on the evidence presented in the record, the Commission finds that BellSouth provides nondiscriminatory access to each of the primary OSS functions (pre-ordering, ordering, provisioning, maintenance and repair, billing, and change management and technical assistance). BellSouth provides access to its OSS in a manner that enables competing carriers to perform the functions in substantially the same time and manner as BellSouth or, if there is not an appropriate retail analogue in BellSouth's systems, in a manner that permits an efficient competitor a meaningful opportunity to compete.

9. Specifically, regarding change management, the Commission finds that, since the *BellSouth Georgia/Louisiana and Multistate Section 271 Orders*, BellSouth has continued to improve the adequacy of its plan by broadening its scope and by increasing the role of competitive LECs in the process. While the Commission finds that problems still exist with respect to BellSouth's adherence to the change management process, the Commission finds those problems—generally, the quality of software releases and the number of change requests awaiting implementation—are not sufficient to warrant a finding of checklist noncompliance.

Other Checklist Items

10. *Checklist Item 4—Unbundled Local Loops.* BellSouth demonstrates that it provides unbundled local loops in accordance with the requirements of section 271 and our rules in that it provides ''local loop transmission from the central office to the customer's premises, unbundled from local switching or other services.'' More specifically, BellSouth establishes that it provides access to loop make-up information in compliance with the *UNE Remand Order* and nondiscriminatory access to stand alone xDSL-capable loops and high-capacity loops. Also, BellSouth provides voice grade loops, both as new loops and through hot-cut conversions, in a nondiscriminatory manner. Finally, BellSouth has demonstrated that it has a line-sharing and line-splitting provisioning process that affords competitors nondiscriminatory access to these facilities.

11. *Checklist Item 11—Number Portability.* Section 251(b)(2) requires all LECs ''to provide, to the extent technically feasible, number portability in accordance with requirements prescribed by the Commission.'' Based on the evidence in the record, we find that BellSouth complies with the requirements of checklist item 11.

12. *Checklist Item 13—Reciprocal Compensation.* Based on the evidence in the record, the Commission concludes that BellSouth has in place reciprocal compensation arrangements in accordance with the requirements of section 252(d)(2) of the Act in compliance with checklist item 13.

13. *Checklist Items 1, 3, 5, 6, 7, 8, 9, 10, 12, and 14.* An applicant under section 271 must demonstrate that it complies with checklist item 1 (interconnection), item 3 (access to poles, ducts, and conduits), item 5 (unbundled transport), item 6 (unbundled local switching), item 7 (911/E911 access and directory assistance/operator services), item 8 (white pages directory listings), item 9 (numbering administration), item 10 (databases and associated signaling), item 12 (local dialing parity), and item 14 (resale). Based on the evidence in the record, the Commission concludes that BellSouth demonstrates that it is in compliance with checklist items 1, 3, 5, 6, 7, 8, 9, 10, 12, and 14 in the two states.

14. *Section 272 Compliance.* BellSouth provides evidence that it maintains the same structural separation and nondiscrimination safeguards in Florida and Tennessee as it does in Alabama, Kentucky, Mississippi, North Carolina, South Carolina, Georgia, and Louisiana, states in which BellSouth has already received section 271 authority. Therefore, the Commission concludes that BellSouth has demonstrated that it is in compliance with the requirements of section 272.

15. *Public Interest Analysis.* The Commission concludes that approval of this application is consistent with the public interest. It views the public interest requirement as an opportunity to review the circumstances presented by the applications to ensure that no other relevant factors exist that would frustrate the congressional intent that markets be open, as required by the competitive checklist, and that entry will therefore serve the public interest as Congress expected. The Commission finds that barriers to competitive entry in the local exchange markets have been removed and that the local exchange markets in each state are open to competition. The Commission also finds that the performance monitoring and enforcement mechanisms developed in each state, in combination with other factors, provide meaningful assurance that BellSouth will continue to satisfy the requirements of section 271 after entering the long distance market.

16. *Section 271(d)(6) Enforcement Authority.* Working with each of the state commissions, the Commission intends to closely monitor BellSouth's post-approval compliance to ensure that BellSouth continues to meet the conditions required for section 271 approval. It stands ready to exercise its various statutory enforcement powers quickly and decisively in appropriate circumstances to ensure that the local market remains open in each of the states.

Federal Communications Commission.

William F. Caton,

Deputy Secretary.

[FR Doc. 02–32651 Filed 12–26–02; 8:45 am]

BILLING CODE 6712–01–P

FEDERAL HOUSING FINANCE BOARD

[No. 2002–N–14]

RIN 3069–AB23

Monthly Survey of Rates and Terms on Conventional One-Family Non-farm Mortgage Loans

AGENCY: Federal Housing Finance Board.

ACTION: Notice of methodological changes to the Monthly Survey of Rates and Terms on Conventional One-

Family, Non-farm Mortgage Loans (Monthly Interest Rate Survey or MIRS), and notice of substitution of certain indexes for adjustable-rate mortgages (Notice).

SUMMARY: The Federal Hosing Finance Board (Finance Board) is implementing several methodological and reporting changes to MIRS and hereby gives notice of the substitution of substantially similar adjustable-rate mortgage (ARM) index rates for certain non-standard index rates in the survey. As part of these changes, several interest-rate series that may be used as an ARM index on a very small number of non-standard ARMs no longer will be made available.

EFFECTIVE DATE: January 1, 2003.

FOR FURTHER INFORMATION CONTRACT: Joseph A. McKenzie, Deputy Chief Economist, (202) 408–2845 or *mckenziej@fhfb.gov,* Federal Housing Finance Board, 1777 F Street, NW., Washington, DC 20006.

SUPPLEMENTARY INFORMATION:

I. Background and Statutory Authority

On September 26, 2000, the Finance Board published in the **Federal Register** (65 FR 57813) a notice proposing several changes to the Monthly Interest Rate Survey aimed at improving the reliability of MIRS data (preliminary notice). Among the proposed changes were: changing the sampling and weighting methodology from one based on lender type and region to one based solely on lender size, eliminating the monthly table of mortgage interest rates and terms by lender type (Table III of the monthly MIRS release), and adding and deleting several metropolitan areas in the quarterly table of mortgage rates and terms by metropolitan area (Table IV of the January, April, July, and October MIRS releases) so that only the largest 32 metropolitan areas would be reported.

The Finance Board conducts MIRS, which provides a statistical base for certain home price benchmarks.[1] By law, the Chairman may approve the adoption of changes to the methodology to be employed that affect the availability of ARM indexes following publication for notice and comment. *See* 12 U.S.C. 1437 note. MIRS is the only national survey of mortgage rates and terms for both new and existing home sales. And because it reports the terms and conditions on loans closed, which may include loan-to-value ratios, term to maturity, number of points actually charged, and features of ARMs, MIRS is more comprehensive than any similar survey.

The Federal Home Loan Bank Act (Act) provides for the on-going availability of indexes used to calculate the interest rates on ARMs, and authorizes the substitution of substantially similar indexes for indexes that may no longer be calculated or made available. *See* 12 U.S.C. 1437 note. The Act provides in pertinent part that the Chairperson of the Finance Board ''shall take such action as may be necessary to assure that the indexes prepared by the * * * Federal Home Loan Bank Board * * * immediately prior to the enactment of this subsection and used to calculate the interest rate on adjustable-rate mortgage instruments continue to be available.'' *Id.*

With respect to the substitution of substantially similar indexes, the Act provides that as set forth in section 402(e)(4) of FIRREA, ''[i]f any agency can no longer make available an index,'' it may substitute a ''substantially similar'' index ''if the * * * Chairperson of the Finance Board * * * determines, after notice and opportunity for comment, that—(A) the new index is based on data substantially similar to that of the original index; and (B) the substitution of the new index will result in an interest rate substantially similar to the rate in effect at the time the original index became unavailable.'' *See* 12 U.S.C. 1437 note. Thus, the Act provides authority for the changes in the methodology and the designation of a substitute index that are the subject of this Notice.

While the Finance Board does not know of any ARMs whose interest rate is linked to any of the series proposed to be deleted, it is possible that a very small number of non-standard ARMs could be linked to these series. Accordingly, the Finance Board proposed the designation of successor index rates as follows:

(1) For any contract mortgage rate listed in Table III of the monthly MIRS release (mortgage rates and terms by lender type) the proposed successor index was the ''National Average Contract Mortgage Rate for All Homes by Combined Lenders'' as reported in the top panel of Table I in the monthly MIRS release;

(2) For any effective mortgage rate listed in Table III of the monthly MIRS release (mortgage rates and terms by lender type) the proposed successor index was the ''National Average Effective Mortgage Rate for All Homes by Combined Lenders'' as reported in the top panel of Table I in the monthly MIRS release;

(3) For any contract mortgage rate listed in Table IV of the quarterly MIRS release (mortgage rates and terms by metropolitan area) for a metropolitan area no longer reported the proposed successor index was the ''National Average Contract Mortgage Rate for All Homes by Combined Lenders'' as reported in Table I in the monthly MIRS release; and

(4) For any effective mortgage rate listed in Table IV of the quarterly MIRS release (mortgage rates and terms by metropolitan area) for a metropolitan area no longer reported the proposed successor index was the ''National Average Effective Mortgage Rate for All Homes by Combined Lenders'' as reported in Table I in the monthly MIRS release.

The preliminary notice proposed eliminating Table III from the monthly MIRS release, and requested comments on the proposed designation of successor index rates, and several other aspects of MIRS. In particular, the preliminary notice requested comments on a proposed change in MIRS sampling and weighting methodology that would sample lenders based solely on lender size as opposed to the current sampling based on lender type and region.

II. Analysis of Comment Letters and Changes Made in the Final Notice

In response to the preliminary notice, the Finance Board received a total of five comment letters—two from housing government-sponsored enterprises and three from trade associations. The comments were nearly unanimous on two points. First, the commenters requested continuation of sampling by lender type because mortgage loans originated by savings institutions (savings and loan associations and mutual savings banks) differ from mortgage loans originated by mortgage companies. Mortgage loans originated by savings institutions tend to be larger, more frequently ARMs, and more frequently non-conforming than mortgages originated by mortgage companies. The commenters feared that

[1] The Housing and Community Development Act of 1980 tied the Fannie Mae and Freddie Mac conforming loan limits to MIRS. *See* Pub. L. 96–399, Title III, § 313(a), (b), 94 Stat. 1644–45 (Oct. 8, 1980). Specifically, Fannie Mae and Freddie ZMac are required by their respective statues, which are nearly identical, to base the change in the annual dollar limit on the ''the national one-family house price in the monthly survey of all major lenders conducted by the [Finance Board.]'' *See* 12 U.S.C. 1717(b)(2), 1454(a)(2). The Finance Board inherited the task of conducting the MIRS from the former Federal Home Loan Bank Board (FHLBB) pursuant to section 402(e)(3) of the Financial Institutions Reform, Recovery, and Enforcement Act of 1989 (''FIRREA''), Pub. L. 101–73, Title VII, § 402(e)(3), 103 Stat. 183 (1989), and was substituted for the former FHLBB in the conforming loan limit provisions pursuant to §§ 731(f)(1)(B) and (f)(2)(B) of FIRREA.

this important mortgage market detail would be lost if savings institutions were not separately sampled. Second, the commenters objected to the immediate adoption of the proposed weighting methodology because there was no information on how the new sampling and weighting methodology would affect the reported data.

Several of the commenters suggested collapsing the ''Savings and Loan Association'' and the ''Mutual Savings Bank'' categories on Table III of the monthly MIRS release. Only one of the commenters addressed the issue of ARM indexes, and that comment urged the elimination of Table IV.

In light of the comments received, the Finance Board will implement a number of changes to MIRS beginning with the January 2003 data that will be available in late February 2003. Several of these changes differ from the changes proposed in the preliminary notice. In particular, the major changes that the Finance Board will adopt are as follows:

(1) MIRS data will use a sampling and weighting methodology based on lender size and lender type. There will be four lender-size classes and three lender-type classes (commercial banks, mortgage companies, and savings institutions). This will give a total of 12 cells to sample lenders from;

(2) Table III of the monthly MIRS release will continue to be made available, but the ''Savings and Loan Association'' and ''Mutual Savings Bank'' categories will be collapsed in to a single ''Savings Institutions'' category; and

(3) Table IV that presents quarterly data by metropolitan area will be changed by the addition of the following metropolitan statistical areas (MSAs) or consolidated metropolitan statistical areas (CMSAs):

Cincinnati—Hamilton, OH–KY–IN CMSA
Sacramento—Yolo, CA CMSA
Orlando, FL MSA
San Antonio, TX MSA
Las Vegas, NV—AZ MSA
Norfolk-Virginia Beach-Newport News, VA–NC MSA;and by the deletion of the following MSAs:

Salt Lake City—Ogden, UT MS
Greensboro—Winston Salem—High Point, NC MSA
Rochester, NY MSA
Louisville, KY–IN MSA
Honolulu, HI MSA.

The Finance Board is adopting the suggestion made by the commenters to retain sampling and weighting by lender type. The Finance Board entered into a Memorandum of Understanding (''MOU'') with the Census Bureau to design a revised sampling and weighting methodology for MIRS. The Census Bureau recommended a methodology similar to those they use in establishment (*i.e.*, non-household) surveys. The new sampling and weighting design will be by lender type and lender size instead of by lender type and region. The new methodology selects the largest institutions in each of the three lender-type classes with certainty. The probability of selection declines (and the weight increases) as lender size in terms of the number of conventional single-family mortgages originated gets smaller.

Mortgage market developments since the last major revision to the MIRS methodology in 1991 include the pervasive presence of interstate activities, conducted either through depositories with interstate branches or through mortgage companies with multi-state origination capabilities. Indeed, there now are mortgage companies with truly national scope of their operations. Because of widespread interstate operations, it is no longer necessary to sample lenders based on region to achieve an adequate regional dispersion of reported loans each month.

Several of the commenters objected to the adoption of a revised methodology because they were uncertain of the effect the revised methodology would have on the reported data. In response to the commenters' concerns, the Finance Board calculated the effect of the revised methodology on the data: the lender-size/lender-type weighting methodology recommended by the Census Bureau was applied to the raw MIRS loans for the period of August 2001 through August 2002 and compared to the existing reported data. Using 13-month averages for both data sets, the existing methodology data was subtracted from the new methodology data, and the following differences were noted:

Contract mortgage rate	0.04%
Effective mortgage rate	0.04%
Initial fees and charges	0.02%
Principal	$1,573
Purchase price	$1,730
Term to maturity (years)	0.16
Loan-to-value ratio	0.06%

The Finance Board does not view any of these differences to be economically significant.

The preliminary notice proposed eliminating Table III from the monthly MIRS release. Because the Finance Board is adopting the suggestion of the commenters to retain a sampling and weighting methodology based in part on lender type, the agency also will retain Table III of the monthly MIRS release with mortgage rates and terms by lender type. Additionally, in response to the comments, Table III will be modified to collapse the former ''Savings and Loan Association'' and ''Mutual Savings Bank'' categories into one category called savings institutions. The change is appropriate, in the Finance Board's view, because distinctions between savings and loan associations and savings banks have eroded, and there is little, if any, practical difference between the two charter types. As is discussed below, the decision to retain Table III affects the designation of successor index rates.

In connection with the proposed elimination of Table III, the preliminary notice proposed successor ARM index rates for any interest-rate series from Table III that may be used as an ARM index rate. By retaining a modified Table III, the Finance Board will be able to designate substitute index rates that are more similar to the series deleted than the successor series proposed in the preliminary notice.

In particular, The Finance Board designates successor series as follows:

(1) The designated successor series for the contract mortgage rate for either savings and loan associations (top panel of Table III) or for mutual savings banks (bottom panel of Table III) is the contract rate for savings institutions in the revised Table III;

(2) The designated successor series for the effective mortgage rate for either savings and loan associations (top panel of Table III) or for mutual savings banks (bottom panel of Table III) is the effective rate for savings institutions in the revised Table III;

(3) The designated successor series for any contract mortgage rate listed in Table IV of the quarterly MIRS release for any of the five metropolitan areas no longer reported is the ''National Average Contract Mortgage Rate for All Homes by Combined Lenders'' as reported in the top panel of Table I in the monthly MIRS release; and

(4) The designated successor series for any effective mortgage rate listed in Table IV of the quarterly MIRS release for any of the five metropolitan areas no longer reported is the ''National Average Effective Mortgage Rate for All Homes by Combined Lenders'' as reported in the top panel of Table I in the monthly MIRS release.

Thus, for the metropolitan area rates, the successor series are the same as those proposed in the preliminary notice, but the successor series relating to savings and loan associations and mutual savings banks differ from those proposed in the preliminary notice. The Finance Board believes that a contract

(effective) mortgage rate series for savings institutions is substantially similar, in accordance with 12 U.S.C. 1437 note, to the contract (effective) mortgage rate for savings and loan associations (or mutual savings banks), and more so than would be true of the national contract (effective) mortgage rate for all lenders. Savings and loan data constitutes about 80 percent of the proposed savings institutions series and mutual savings bank data constitutes the other 20 percent. In contrast, combined savings and loan association and mutual savings bank data constitute only about 20 percent of the data for all lenders.

The Finance Board also is using this opportunity to modify the MSAs listed in the quarterly Table IV that lists rates and terms by metropolitan area. The change is the deletion of five MSAs and the addition of six MSAs so that the quarterly table presents information for the 32 largest MSAs. Based on 2000 population data, the ranking of the deleted MSAs is as follows:

Salt Lake City-Ogden, UT (35)
Greensboro-1 Winston Salem-1 High Point, NC (36)
Rochester, NY (46)
Louisville, KY–IN (49)
Honolulu, HI (55).

The changes to MIRS sampling and weighting methodology and tables will occur with the January 2003 data that will be published in late February 2003. The January 2003 implementation will allow the MIRS data to be weighted using a consistent methodology within each calendar year, and permit all interested parties to become familiar with the changes.

Dated: December 20, 2002

John T. Korsmo,

Chairman, Federal Housing Finance Board.

[FR Doc. 02–32752 Filed 12–26–02; 8:45 am]

BILLING CODE 6725–01–P

FEDERAL MARITIME COMMISSION

Notice of Agreement(s) Filed

The Commission hereby gives notice of the filing of the following agreement(s) under the Shipping Act of 1984. Interested parties can review or obtain copies of agreements at the Washington, DC offices of the Commission, 800 North Capitol Street, NW., Room 940. Interested parties may submit comments on an agreement to the Secretary, Federal Maritime Commission, Washington, DC 20573, within 10 days of the date this notice appears in the **Federal Register**.

Agreement No.: 011741–004.

Title: U.S. Pacific Coast—Oceania Agreement.

Parties: Hamburg-Sud, P&O Nedlloyd Limited, P&O Nedlloyd B.V., Australia-New Zealand Direct Line, Fesco Ocean Management Limited, Maersk Sealand.

Synopsis: The amendment (1) Adds Maersk Sealand as a party, (2) modifies vessel and allocation provisions to reflect the above, (3) extends the term of the agreement, (4) deletes some cost savings sharing provisions, (5) revises treatment of excess space (6) revises treatment of excess space (7) revises arbitration and governing law provision and (8) restates the agreement.

Agreement No.: 011834.

Title: Maersk Sealand/Hapag Lloyd Mediterranean U.S. East Coast Slot Charter Agreement.

Parties: A.P. Moller-Maersk Sealand, *Hapag-Lloyd Container Linie GmbH.*

Synopsis: The agreement authorizes A.P. Moller-Maersk Sealand to charter space to Hapag-Lloyd Container Linie GmbH in the trade between the U.S. Atlantic Coast and ports in the Spain in the Algeciras-Cadiz range. The parties request expedited review.

By Order of the Federal Maritime Commission.

Dated: December 23, 2002.

Bryant L. VanBrakle,

Secretary.

[FR Doc. 02–32762 Filed 12–26–02; 8:45 am]

BILLING CODE 6730–01–P

DEPARTMENT OF HEALTH AND HUMAN SERVICES

Office of the Secretary

Agency Information Collection Activities: Proposed Collections; Comment Request

The Department of Health and Human Services, Office of the Secretary will periodically publish summaries of proposed information collections projects and solicit public comments in compliance with the requirements of section 3506(c)(2)(A) of the Paperwork Reduction Act of 1995. To request more information on the project or to obtain a copy of the information collection plans and instruments, call the OS Reports Clearance Office at (202) 619–2118 or e-mail *Geerie.Jones@HHS.gov.*

Comments are invited on: (a) Whether the proposed collection of information is necessary for the proper performance of the functions of the agency, including whether the information shall have practical utility; (b) the accuracy of the agency's estimate of the burden of the proposed collection of information; (c) ways to enhance the quality, utility and clarity of the information to be collected; and (d) ways to minimize the burden of the collection of information on respondents, including through the use of automated collection techniques or other forms of information technology.

Proposed Project 1. Office for Civil Rights Complaint Forms—New—To enable the Office for Civil Rights to develop an automated option for complaint submittal, standardized complaint forms have been developed. The use of these forms will be voluntary; complaints may be submitted via other means such as letter or e-mail. The Office for Civil Rights (OCR) is responsible for enforcing Title VI of the Civil Rights Act of 1964, section 504 of the Rehabilitation Act of 1973, the Age Discrimination Act of 1975 and other statutes which prohibit discrimination by programs or entities that receive Federal financial assistance from HHS. Additionally, OCR has jurisdiction over Federally-conducted programs in cases involving disability-based discrimination under Section 504 of the Rehabilitation Act, over State and local public entities in cases involving disability-based discrimination under Title II of the Americans with Disabilities Act and, effective April 14, 2003, over certain health plans, health clearinghouses and health care providers with respect to enforcement of the standards for privacy of individually identifiable health information rule issued pursuant to the Health Insurance Portability and Accountability Act (HIPAA).

Under these authorities, individuals may file written complaints with OCR when they believe they have been discriminated against or if they believe that on or after April 14, 2003, their right to the privacy of protected health information has been violated. OCR has developed two complaint forms—one for civil rights discrimination complaints and one for complaints alleging violation of the privacy of protected health information.

Burden Information: Respondents—individuals; *Average Time per Response:* 45 minutes We estimate that there will be, on average, 2,200 civil rights complaints annually (1,650 burden hours annually), and approximately 21,710 complaints concerning medical privacy (16,283 burden hours annually).

Send comments via e-mail to *Geerie.Jones@HHS.gov* or mail to OS Reports Clearance Office, Room 503H, Humphrey Building, 200 Independence Avenue SW., Washington, DC, 20201. Written comments should be received within 60 days of this notice.

Dated: December 16, 2002.

Kerry Weems,

Deputy Assistant Secretary, Budget.

[FR Doc. 02–32631 Filed 12–26–02; 8:45 am]

BILLING CODE 4153–01–M

DEPARTMENT OF HEALTH AND HUMAN SERVICES

Office of the Secretary

Agency Information Collection Activities: Submission for OMB Review; Comment Request

The Department of Health and Human Services, Office of the Secretary publishes a list of information collections it has submitted to the Office of Management and Budget (OMB) for clearance in compliance with the Paperwork Reduction Act of 1995 (44 U.S.C. Chapter 35) and 5 CFR 1320.5. The following are those information collections recently submitted to OMB.

1. Service Use and Transitions of Private Long-term Care Insurance Claimants—The Department's Office of the Assistant Secretary for Planning and Evaluation proposes to conduct a study to better understand the circumstances or factors that motivate elders who have purchased long-term care insurance policies to use services and file claims for benefits. The purpose is to obtain a comprehensive demographic, health and attitudinal profile of individuals with private long term care insurance policies. *Respondents:* Individuals—Burden Information for Baseline Survey—*Number of Respondents:* 1,650; *Burden per Response:* 1.36 hours; *Burden for Baseline Surveys:* 2,251 hours—Burden Information for Follow-up Interview—*Number of Responses:* 5,105; *Burden per Response:* .288 hours; *Burden for Follow-up:* 1469 hours—*Total Burden:* 3,720 hours.

OMB Desk Officer: Allison Herron Eydt.

Copies of the information collection packages listed above can be obtained by calling the OS Reports Clearance Officer on (202) 690–6207. Written comments and recommendations for the proposed information collection should be sent directly to the OMB desk officer designated above at the following address: Human Resources and Housing Branch, Office of Management and Budget, New Executive Office Building, Room 10235, 725 17th Street NW., Washington, DC 20503.

Comments may also be sent to Cynthia Agens Bauer, OS Reports Clearance Officer, Room 503H, Humphrey Building, 200 Independence Avenue SW., Washington DC 20201. Written comments should be received within 30 days of this notice.

Dated: December 12, 2002.

Kerry Weems,

Deputy Assistant Secretary, Budget.

[FR Doc. 02–32632 Filed 12–26–02; 8:45 am]

BILLING CODE 4154–05–M

DEPARTMENT OF HEALTH AND HUMAN SERVICES

Notice of Meeting of the Advisory Committee on Blood Safety and Availability

AGENCY: Office of the Secretary.

ACTION: Notice of meeting.

SUMMARY: The Advisory Committee on Blood Safety and Availability will meet on Thursday, January 23, 2003 and Friday, January 24, 2003 from 8 a.m. to 5 p.m. The meeting will take place at the Hyatt Regency Hotel on Capitol Hill, 400 New Jersey Avenue, NW., Washington, DC 20001. The meeting will be entirely open to the public.

The title of this meeting will be ''Prioritizing Decisions in Transfusion Medicine: Transfusion Transmissible Diseases.''

Public comment will be solicited at the meeting. Public comment will be limited to five minutes per speaker. Those who wish to have printed material distributed to Advisory Committee members should submit thirty (30) copies to the Acting Executive Secretary prior to close of business January 24, 2003. Those who wish to utilize electronic data projection in their presentation to the Committee must submit their material to the Acting Executive Secretary prior to close of business January 17, 2003. In addition, anyone planning to comment is encouraged to contact the Acting Executive Secretary at her/his earliest convenience.

FOR FURTHER INFORMATION CONTACT: CAPT Lawrence C. McMurtry, Acting Executive Secretary, Advisory Committee on Blood Safety and Availability, Department of Health and Human Services, Office of Public Health and Science, 200 Independence Ave., SW., Room 736–E, Washington, DC 20201. Phone (202) 690–5558, FAX (202) 260–9372, e-mail *mcmurtry@osophs.dhhs.gov*

Lawrence C. McMurtry,

Acting Executive Secretary, Advisory Committee on Blood Safety and Availability.

[FR Doc. 02–32629 Filed 12–26–02; 8:45 am]

BILLING CODE 4150–28–M

DEPARTMENT OF HEALTH AND HUMAN SERVICES

Centers for Disease Control and Prevention

[60 Day–03–28]

Proposed Data Collections Submitted for Public Comment and Recommendations

In compliance with the requirement of section 3506(c)(2)(A) of the Paperwork Reduction Act of 1995 for opportunity for public comment on proposed data collection projects, the Centers for Disease Control and Prevention (CDC) will publish periodic summaries of proposed projects. To request more information on the proposed projects or to obtain a copy of the data collection plans and instruments, call the CDC Reports Clearance Officer on (404) 498–1210.

Comments are invited on: (a) Whether the proposed collection of information is necessary for the proper performance of the functions of the agency, including whether the information shall have practical utility; (b) the accuracy of the agency's estimate of the burden of the proposed collection of information; (c) ways to enhance the quality, utility, and clarity of the information to be collected; and (d) ways to minimize the burden of the collection of information on respondents, including through the use of automated collection techniques or other forms of information technology. Send comments to Anne O'Connor, CDC Assistant Reports Clearance Officer, 1600 Clifton Road, MS–D24, Atlanta, GA 30333. Written comments should be received within 60 days of this notice.

Proposed Project: Evaluation of Effectiveness of NIOSH Publications—Extension—National Institute for Occupational Safety and Health (NIOSH), Centers for Disease Control and Prevention (CDC). Through the development, organization, and dissemination of information, NIOSH promotes awareness about occupational hazards and their control, and improves the quality of American working life. Although NIOSH uses a variety of media and delivery mechanisms to communicate with its constituents, one of the primary vehicles is through the distribution of NIOSH-numbered publications. The extent to which these publications successfully meet the information needs of their intended audience is not currently known. In a period of diminishing resources and increasing accountability, it is important that NIOSH be able to demonstrate that communications about its research and

service programs are both effective and efficient in influencing workplace change. This requires a social marketing evaluation of NIOSH products to measure the degree of customer satisfaction and their adoption of recommended actions.

The present project proposes to do this by conducting a survey of a primary segment of NIOSH's customer base, the community of occupational safety and health professionals. In collaboration with the American Association of Occupational Health Nurses (13,000 members), the American Industrial Hygiene Association (12,400 members), the American College of Occupational and Environmental Medicine (6,500 members), and the American Society of Safety Engineers (33,000 members), NIOSH will survey a sample of their memberships to ascertain, among other things: (1) Their perceptions and attitudes toward NIOSH as a general information resource; (2) their perceptions and attitudes about specific types of NIOSH publications (*e.g.*, criteria documents, technical reports, alerts); (3) the frequency and nature of referral to NIOSH in affecting occupational safety and health practices and policies; (4) the extent to which they have implemented NIOSH recommendations; and (5) their recommendations for improving NIOSH products and delivery systems. The results of this survey will provide an empirical assessment of the impact of NIOSH publications on occupational safety and health practice and policy in the United States as well as provide direction for shaping future NIOSH communication efforts. Respondents will have the option of responding by mail or electronically through the NIOSH Web site. There is no costs to respondents for participation.

Respondents	Number of respondents	Number of responses/ respondent	Average burden/ response (in hrs.)	Total burden in hours
Survey Sample American Association of Occupational Health Nurses American Industrial Hygiene Association American College of Occupational and Environmental Medicine American Society of Safety Engineers	600	1	20/60	200
Total				200

Dated: December 20, 2002.

Nancy E. Cheal,

Acting Associate Director for Policy, Planning and Evaluation, Centers for Disease Control and Prevention.

[FR Doc. 02–32655 Filed 12–26–02; 8:45 am]

BILLING CODE 4163–18–P

DEPARTMENT OF HEALTH AND HUMAN SERVICES

Centers for Disease Control and Prevention

[60Day–03–30]

Proposed Data Collections Submitted for Public Comment and Recommendations

In compliance with the requirement of section 3506(c)(2)(A) of the Paperwork Reduction Act of 1995 for opportunity for public comment on proposed data collection projects, the Centers for Disease Control and Prevention (CDC) will publish periodic summaries of proposed projects. To request more information on the proposed projects or to obtain a copy of the data collection plans and instruments, call the CDC Reports Clearance Officer on (404) 498–1210.

Comments are invited on: (a) Whether the proposed collection of information is necessary for the proper performance of the functions of the agency, including whether the information shall have practical utility; (b) the accuracy of the agency's estimate of the burden of the proposed collection of information; (c) ways to enhance the quality, utility, and clarity of the information to be collected; and (d) ways to minimize the burden of the collection of information on respondents, including through the use of automated collection techniques or other forms of information technology. Send comments to Anne O'Connor , CDC Assistant Reports Clearance Officer, 1600 Clifton Road, MS–D24, Atlanta, GA 30333. Written comments should be received within 60 days of this notice.

Proposed Project: 2004 National Health Interview Survey,(0920–0214)—Revision—National Center for Health Statistics (NCHS), Centers for Disease Control and Prevention (CDC).

The annual National Health Interview Survey (NHIS) is a basic source of general statistics on the health of the U.S. population. In accordance with the 1995 initiative to increase the integration of surveys within the Department of Health and Human Services, respondents to the NHIS serve as the sampling frame for the Medical Expenditure Panel Survey. This survey is conducted by the Agency for Healthcare Research and Quality. The NHIS has long been used by government, university, and private researchers to evaluate both general health and specific issues, such as cancer, AIDS, and childhood immunizations. Journalists use its data to inform the general public. It will continue to be a leading source of data for the Congressionally mandated ''Health US'' and related publications, as well as the single most important source of statistics to track progress toward the National Health Promotion and Disease Prevention Objectives, ''Healthy People 2010.''

Because of survey integration and changes in the health and health care of the U.S. population, demands on the NHIS have changed and increased, leading to a major redesign of the annual core questionnaire, or Basic Module, and a shift from paper questionnaires to computer assisted personal interviews (CAPI). These redesigned elements were partially implemented in 1996 and fully implemented in 1997. This clearance is for the eighth full year of data collection using the core questionnaire on CAPI, for the implementation of a supplement on children's mental health, and for a software field test to evaluate a switch from CASES software to Blaise software for the CAPI instrument. The field test for the new software is scheduled for June 2003. The data collection for the full survey is planned for January-December 2004, and will result in publication of new national estimates of health statistics, release of public use micro data files, and a sampling frame for other integrated surveys. There is no cost to the respondents other than their time.

SOFTWARE FIELD TEST IN JUNE 2003

Respondents	Number of respondents	Number of responses/respondent	Average burden/response (in hours)	Total burden (in hours)
Family	300	1	21/60	105
Sample Adult	246	1	42/60	172
Sample Child	100	1	15/60	25
Total				302

FULL SURVEY JANUARY–DECEMBER 2004

Respondents	Number of respondents	Number of responses/respondent	Average burden/response (in hours)	Total burden (in hours)
Family	39,000	1	21/60	13,650
Sample Adult	32,000	1	42/60	22,400
Sample Child	13,000	1	15/60	3,250
Total				39,300

Dated: December 20, 2002.

Nancy E. Cheal,

Acting Associate Director for Policy, Planning and Evaluation, Centers for Disease Control and Prevention.

[FR Doc. 02–32656 Filed 12–26–02; 8:45 am]

BILLING CODE 4163–18–P

DEPARTMENT OF HEALTH AND HUMAN SERVICES

Centers for Disease Control and Prevention

[60Day–03–26]

Proposed Data Collections Submitted for Public Comment and Recommendations

In compliance with the requirement of section 3506(c)(2)(A) of the Paperwork Reduction Act of 1995 for opportunity for public comment on proposed data collection projects, the Centers for Disease Control and Prevention (CDC) will publish periodic summaries of proposed projects. To request more information on the proposed projects or to obtain a copy of the data collection plans and instruments, call the CDC Reports Clearance Officer on (404) 498–1210.

Comments are invited on: (a) Whether the proposed collection of information is necessary for the proper performance of the functions of the agency, including whether the information shall have practical utility; (b) the accuracy of the agency's estimate of the burden of the proposed collection of information; (c) ways to enhance the quality, utility, and clarity of the information to be collected; and (d) ways to minimize the burden of the collection of information on respondents, including through the use of automated collection techniques or other forms of information technology. Send comments to Anne O'Connor, CDC Assistant Reports Clearance Officer, 1600 Clifton Road, MS-D24, Atlanta, GA 30333. Written comments should be received within 60 days of this notice.

Proposed Project: National Program of Cancer Registries—Cancer Surveillance System 0920–0469—Extension—National Center for Chronic Disease Prevention and Health Promotion (NCCDPHP), Centers for Disease Control and Prevention (CDC).

The American Cancer Society estimates that about 1.2 million Americans will be newly diagnosed with cancer and that about 8.2 million Americans are currently alive with a history of cancer. The National Institutes of Health estimates the cost of cancer is about $172 billion including ($61 billion) direct costs to treat cancer and ($111 billion) indirect costs in lost productivity due to illness and premature death.

In 2000, CDC implemented the National Program of Cancer Registries (NPCR)—Cancer Surveillance System (CSS) to collect, evaluate and disseminate cancer incidence data collected by population-based cancer registries. In 2002, CDC published United States Cancer Statistics—1999 Incidence which provided cancer statistics for 78% of the United States population from all cancer registries whose data met national data standards. Prior to this, at the national level, cancer incidence data were available for only 14% of the population of the United States.

With this expanded coverage of the U.S. population, it will now be possible to better describe geographic variation in cancer incidence throughout the country and provide incidence data on minority populations and rare cancers to further plan and evaluate state and national cancer control and prevention efforts.

Therefore, the CDC's NCCDPHP, Division of Cancer Prevention and Control, proposes to continue to aggregate existing cancer incidence data from states funded by the National Program of Cancer Registries into a national surveillance system.

These data are already collected and aggregated at the state level. Thus the additional burden on the states is small. Funded states are asked to continue to report data to CDC on an annual basis twelve months after the close of a diagnosis year and again at twenty-four months to obtain more complete incidence data and vital status from mortality data. The estimated annualized cost to respondents is $885,000.

Respondents	No. of respondents	No. of responses/respondent	Average burden/response (in hours)	Total burden (in hours)
State, Territorial, and District of Columbia Cancer Registries	63	1	2	126
Total				126

Dated: December 20, 2002.

Nancy E. Cheal,

Acting Associate Director for Policy, Planning and Evaluation, Centers for Disease Control and Prevention.

[FR Doc. 02–32657 Filed 12–26–02; 8:45 am]

BILLING CODE 4163–18–P

DEPARTMENT OF HEALTH AND HUMAN SERVICES

Centers for Disease Control and Prevention

[60Day–03–27]

Proposed Data Collections Submitted for Public Comment and Recommendations

In compliance with the requirement of section 3506(c)(2)(A) of the Paperwork Reduction Act of 1995 for opportunity for public comment on proposed data collection projects, the Centers for Disease Control and Prevention (CDC) will publish periodic summaries of proposed projects. To request more information on the proposed projects or to obtain a copy of the data collection plans and instruments, call the CDC Reports Clearance Officer on (404) 498–1210.

Comments are invited on: (a) Whether the proposed collection of information is necessary for the proper performance of the functions of the agency, including whether the information shall have practical utility; (b) the accuracy of the agency's estimate of the burden of the proposed collection of information; (c) ways to enhance the quality, utility, and clarity of the information to be collected; and (d) ways to minimize the burden of the collection of information on respondents, including through the use of automated collection techniques or other forms of information technology. Send comments to Anne O'Connor, CDC Assistant Reports Clearance Officer, 1600 Clifton Road, MS-D24, Atlanta, GA 30333. Written comments should be received within 60 days of this notice.

Proposed Project: National Coal Workers' Autopsy Study (NCWAS) Consent Release and History Form 0920–0021—Extension—National Institute for Occupational Safety and Health (NIOSH), Centers for Disease Control and Prevention.

Background

Under the Federal Coal Mine Health and Safety Act of 1977, Pub. L. 91–173 (amended the Federal Coal Mine and Safety Act of 1969), the Public Health Service has developed a nationwide autopsy program (NCWAS) for underground coal miners. The NCWAS is a service program to aid surviving relatives in establishing eligibility for black lung compensation. The Consent Release and History Form is primarily used to obtain written authorization from the next-of-kin to perform an autopsy on the deceased miner. Because a basic reason for the post-mortem examination is research (both epidemiological and clinical), a minimum of essential information is collected regarding the deceased miners, including occupational history and smoking history. The data collected will be used by the staff at NIOSH for research purposes in defining the diagnostic criteria for coal workers' pneumoconiosis (black lung) and pathologic changes that will be correlated with x-ray findings.

It is estimated that only 5 minutes is required for the pathologist to put a statement on the invoice affirming that no other compensation is received for the autopsy. From past experience, it is estimated that 15 minutes is required for the next-of-kin to complete the Consent Release and History Form. Since an autopsy report is routinely completed by a pathologist, the only additional burden is the specific request of abstraction of the terminal illness and final diagnosis relating to pneumoconiosis. Therefore, only 5 minutes of additional burden is estimated for the autopsy report. There are no costs to respondents.

Respondents	Number of respondents	Number of responses/respondent	Averagae burden/response (in hrs.)	Total burden (in hrs.)
Pathologist Invoice	50	1	5/60	4.2
Pathologist Report	50	1	5/60	4.2
Next-of-Kin	50	1	15/60	12.5
Total				20.9

Dated: December 20, 2002.

Nancy E. Cheal,

Acting Associate Director for Policy, Planning and Evaluation, Centers for Disease Control and Prevention.

[FR Doc. 02–32658 Filed 12–26–02; 8:45 am]

BILLING CODE 4163–18–P

DEPARTMENT OF HEALTH AND HUMAN SERVICES

Centers for Disease Control and Prevention

[60 Day–03–29]

Proposed Data Collections Submitted for Public Comment and Recommendations

In compliance with the requirement of section 3506(c)(2)(A) of the Paperwork Reduction Act of 1995 for opportunity for public comment on proposed data collection projects, the Centers for Disease Control and Prevention (CDC) will publish periodic summaries of proposed projects. To request more information on the proposed projects or to obtain a copy of the data collection plans and instruments, call the CDC Reports Clearance Officer on (404) 498–1210.

Comments are invited on: (a) Whether the proposed collection of information is necessary for the proper performance of the functions of the agency, including whether the information shall have practical utility; (b) the accuracy of the agency's estimate of the burden of the proposed collection of information; (c) ways to enhance the quality, utility, and clarity of the information to be collected; and (d) ways to minimize the burden of the collection of information on respondents, including through the use of automated collection techniques or other forms of information technology. Send comments to Seleda Perryman, CDC Assistant Reports Clearance Officer, 1600 Clifton Road, MS–D24, Atlanta, GA 30333. Written comments should be received within 60 days of this notice.

Proposed Project: Application for Training (OMB No. 0920–0017)—Revision—The Public Health Practice Program Office (PHPPO), in conjunction with the Public Health Training, offers self-study, computer-based training, satellite broadcasts, video courses, web-casts, instructor-led field courses, and lab courses related to public health professionals worldwide. Employees of hospitals, universities, medical centers, laboratories, state and federal agencies, and state and local health departments apply for training in an effort to learn up-to-date public health procedures. The ''Application for Training'' forms are the official applications used for all training activities conducted by the CDC. The Continuing Education (CE) Program includes CDC's accreditation to provide Continuing Medical Education (CME), Continuing Nurse Education (CNE), Certified Health Education Specialist (CHES), and Continuing Education Unit (CEU) for almost all training activities. The only cost to the respondent is the time involved to complete the application.

Respondents	No. of respondents	Number of responses/ respondent	Average burden/ response (in hours)	Total burden (in hours)
(Form 32.1)	8,500	1	5/60	708
PHTN (Form 36.5)	45,000	1	5/60	3,750
SMDP (no form no.)	25	1	15/60	6
Total	53,525			4,464

Dated: December 20, 2002.

Nancy E. Cheal,

Acting Associate Director for Policy, Planning and Evaluation, Centers for Disease Control and Prevention.

[FR Doc. 02–32673 Filed 12–26–02; 8:45 am]

BILLING CODE 4163–18–P

DEPARTMENT OF HEALTH AND HUMAN SERVICES

Centers for Disease Control and Prevention

[Program Announcement 03017]

Systems-Based Diabetes Prevention and Control Programs (DPCPS); Notice of Availability of Funds; Amendment

A notice announcing the availability of fiscal year (FY) 2003 funds for cooperative agreements for Systems-Based Diabetes Prevention and Control Programs (DPCPs) was published in the **Federal Register** on November 25, 2002, Vol. 67, No. 227, pages 70602–70611. The notice is amended as follows:

On page 70608, Column 2, Section ''G. Application Submission and Deadline,'' Paragraph ''Submission Date, Time, and Address,'' Line 2, delete the date ''January 9, 2003'' and replace with ''January 17, 2003.''

Some terminology used for this program has changed. Throughout the document, delete the term ''Core'' and replace with ''Capacity Building.'' Delete the term ''Tier 1'' and replace with ''Capacity Building.'' Delete the term ''Comprehensive'' and replace with ''Basic Implementation.'' Delete the term ''Tier 2'' and replace with ''Basic Implementation.''

Dated: December 12, 2002.

Sandra R. Manning,

Director, Procurement and Grants Office, Centers for Disease Control and Prevention.

[FR Doc. 02–32681 Filed 12–26–02; 8:45 am]

BILLING CODE 4163–18–P

DEPARTMENT OF HEALTH AND HUMAN SERVICES (HHS)

Centers for Medicare & Medicaid Services

[CMS–1231–N]

Medicare Program; Re-Chartering of the Advisory Panel on Ambulatory Payment Classification Groups and Notice of Meeting of the Advisory Panel—January 21, 22, and 23, 2003

AGENCY: Centers for Medicare & Medicaid Services (CMS), HHS.

ACTION: Notice of re-chartering and notice of meeting.

SUMMARY: This notice announces the re-chartering of the Advisory Panel on Ambulatory Payment Classification (APC) Groups (the Panel) for a 2-year period through November 21, 2004, and also announces, in accordance with section 10(a) of the Federal Advisory Committee Act (5 U.S.C. Appendix 2), the third annual meeting of the Advisory Panel.

The purpose of the Panel is to review the APC groups, and their associated weights, and to advise the Secretary of Health and Human Services and the Administrator of the Centers for Medicare & Medicaid Services concerning the clinical integrity of the APC groups and their weights. The advice provided by the Panel will be considered as CMS prepares its annual update of the hospital outpatient prospective payment system (OPPS) through rulemaking.

DATES: *Meeting dates:* The third annual meeting is scheduled for Tuesday (January 21), Wednesday (January 22), and Thursday (January 23), 2003, from 8:30 a.m. until 5 p.m. daily (e.s.t.).

ADDRESSES: The 3-day meeting will be held in the Multipurpose Room, 1st Floor, at the CMS Central Office, 7500 Security Boulevard, Baltimore, Maryland 21244–1850.

FOR FURTHER INFORMATION CONTACT: For copies of the charter, for inquiries regarding these meetings, for meeting registration, and for submitting oral presentations or written agenda items, contact the meeting coordinator, Shirl Ackerman-Ross, CMS, Center for Medicare Management (CMM), Hospital Ambulatory Policy Group (HAPG), Division of Outpatient Care (DOC), 7500 Security Boulevard, Mail Stop C4–05–17, Baltimore, MD 21244, or phone (410) 786–4474. Also, please refer to the CMS Advisory Committees' Information Line at 1–877–449–5659 (toll free) and (410) 786–9379 (local).

For additional information on the APC meeting agenda topics or updates to the Panel's activities, search our Internet Web site: *http://www.cms.hhs.gov/faca/apc/default.asp.*

To submit a request for a copy of the charter, search the Internet at *http://www.cms.hhs.gov/faca* or e-mail *SAckermannross@cms.hhs.gov.*

Written materials may also be sent electronically to *outpatientpps@cms.hhs.gov.*

News media representatives should contact our Public Affairs Office at (202) 690–6145.

SUPPLEMENTARY INFORMATION:

I. Background

The Secretary of Health and Human Services (the Secretary) is required by section 1833(t)(9)(A) of the Social Security Act (the Act), as amended by section 201(h)(1)(B) and redesignated by section 202(a)(2) of the Balanced Budget Refinement Act of 1999 (BBRA) (Pub. L. 106–113), to establish and consult with an expert, outside advisory panel on ambulatory payment classification (APC) groups. The Advisory Panel on Ambulatory Payment Classification Groups (the Panel) meets a minimum of once annually to review the APC groups and to provide technical advice to the Secretary and to the Administrator of the Centers for Medicare & Medicaid Services (the Administrator) concerning the clinical integrity of the groups and their associated weights. We will consider the technical advice provided by the Panel as we prepare the proposed rule that proposes changes to the hospital outpatient prospective payment system (OPPS) for the next calendar year.

The Panel may consist of up to 15 representatives of Medicare providers, which are subject to the OPPS. The Administrator selected the Panel membership based upon either self-nominations or nominations submitted by providers or organizations. The Panel presently consists of the following 14 members and a Chair: Paul Rudolf, M.D., J.D., Chair, a CMS medical officer; Michelle Burke, R.N., M.S.A.; Leslie Jane Collins, R.N., B.S.N; Geneva Craig, R.N., M.A.; Lora DeWald, M.Ed.; Robert E. Henkin, M.D.; Lee H. Hilborne, M.D., M.P.H.; Stephen T. House, M.D.; Kathleen Kinslow, C.R.N.A., Ed.D.; Mike Metro, R.N., B.S.; Gerald V. Naccarelli, M.D.; Beverly K. Philip, M.D.; Karen Rutledge, B.S.; William A. Van Decker, M.D.; and Paul E. Wallner, D.O., F.A.C.R.

II. Provisions of This Notice

A. Re-Chartering

This notice announces the signing of the APC charter (Re-charter) by the Secretary on November 21, 2002. The charter will terminate on November 21, 2004, unless re-chartered by the Secretary before the expiration date.

B. Meeting Notice

The agenda for the January 2003 meeting will provide for discussion and comment on the following topics:

- Reconfiguration of APCs (for example, splitting of APCs, moving Healthcare Common Procedure Coding System (HCPCS) codes from one APC to another, and moving HCPCS codes from New Technology APCs to Clinical APCs).
- Packaging devices and drug costs into APCs: methodology, effect on APCs, and need for reconfiguring APCs based upon device and drug packaging.
- Removal of procedures from the inpatient list for payment under the OPPS.
- Use of single and multiple procedure claims data.
- Packaging of HCPCS codes.
- Other technical issues concerning APC structure.

We are soliciting comments from the public on specific proposed items falling within these agenda topics for the January 2003 Panel meeting. In order to be considered as a potential agenda topic for this meeting, comments must be submitted in writing and must fall within the agenda topics listed above. We urge those who wish to comment to send comments as soon as possible—but no later than 5 p.m. (e.s.t.) on Monday, January 6, 2003.

The meeting is open to the public, but attendance is limited to the space available. Individuals or organizations wishing to make 5-minute oral presentations should contact the meeting coordinator by 5 p.m. (e.s.t.) on Monday, January 6, 2003, in order to be scheduled. The number of oral presentations may be limited by the time available, and in no case should any oral presentation exceed 5 minutes.

Persons wishing to present must submit a copy of the presentation and the name, address, and telephone number of the proposed presenter. In addition, all presentations must contain, at a minimum, the following supporting information and data:

- Financial relationship(s), if any, with any company whose products, services, or procedures are under consideration.
- Physicians' Current Procedural Terminology (CPT) codes involved.
- APC(s) affected.
- Description of the issue(s).
- Clinical description of the service under discussion (with comparison to other services within the APC).
- Recommendations and rationale for change.
- Expected outcome of change and potential consequences of not making the change.

Submit a written copy of the oral remarks or written agenda items to the meeting coordinator listed above or electronically to the address: *outpatientpps@cms.hhs.gov.* Because of staffing and resource limitations, we cannot accept comments by facsimile (FAX) transmission and cannot acknowledge or respond individually to comments we receive.

In addition to formal presentations, there will be an opportunity during the meeting for public comment, limited to 1 minute for each individual or organization.

Any persons wishing to attend this meeting, which is located on Federal property, must call the meeting coordinator to register in advance by no later than January 2, 2003. Persons attending must present a photographic identification to the Federal Protective Service or Guard Service personnel

before they will be allowed to enter the building. Persons who are not registered in advance will not be permitted into the building and will not be permitted to attend the meeting.

A member of our staff will be stationed at the Central Building first-floor lobby to provide assistance to attendees. Please remember that all visitors must be escorted if they have business in areas other than the lower- and first-floor levels in the Central Building. Parking permits and instructions are issued upon arrival by the guards at the main entrance.

Individuals requiring sign-language interpretation for the hearing impaired or other special accommodations should send a request for these services to the meeting coordinator by Monday, January 6, 2003.

Authority: Section 1833(t) of the Social Security Act (42 U.S.C. 1395(t), as amended by section 201(h) of the BBRA of 1999 (Pub. L. 106–113). The Panel is governed by the provisions of Pub. L. 92–463, as amended (5 U.S.C. Appendix 2).

Dated: December 4, 2002.

Thomas A. Scully,

Administrator, Centers for Medicare & Medicaid Services.

[FR Doc. 02–31409 Filed 12–26–02; 8:45 am]

BILLING CODE 4120–01–P

DEPARTMENT OF HEALTH AND HUMAN SERVICES

Centers for Medicare & Medicaid Services

[CMS–3104–N]

Medicare Program; Renewal and Amendment of the Charter of the Medicare Coverage Advisory Committee (MCAC)

AGENCY: Centers for Medicare & Medicaid Services (CMS), HHS.

ACTION: Notice.

SUMMARY: This notice announces the renewal and amendment of the Charter of the Medicare Coverage Advisory Committee (the Committee). The Committee advises the Secretary of the Department of Health and Human Services (the Secretary) and the Administrator of the Centers for Medicare & Medicaid Services on whether adequate evidence exists to determine whether specific medical items and services are reasonable and necessary under Title XVIII of the Social Security Act.

FOR FURTHER INFORMATION CONTACT: Michelle Atkinson, Office of Clinical Standards and Quality, CMS, 7500 Security Boulevard, Mail Stop C1–09–06, Baltimore, MD 21244, (410) 786–2881, or e-mail *matkinson@cms.hhs.gov.*

SUPPLEMENTARY INFORMATION:

I. Background

On December 14, 1998, we published a notice in the **Federal Register** (63 FR 68780) announcing establishment of the Medicare Coverage Advisory Committee (MCAC). The Secretary signed the initial charter for the MCAC on November 24, 1998.

The MCAC, chartered under 42 U.S.C. 217(a), section 222 of the Public Health Service Act, as amended, is governed by the provisions of the Federal Advisory Committee Act (FACA) (Pub. L. 92–463 as amended (5 U.S.C. Appendix 2)), which sets forth standards for the formulation and use of advisory committees.

The Committee consists of a maximum of 100 appointed members from authorities in clinical and administrative medicine, biologic and physical sciences, public health administration, health care data and information management and analysis, the economics of health care, medical ethics, and other related professions. Each Committee meeting will deal with one or more specific clinical topics, and will generally include 13 to 15 Committee members. A roster will be developed and published in advance for each Committee meeting. Members will be chosen to serve on the roster for each Committee meeting as to their expertise and topic to be discussed.

The Committee reviews and evaluates medical literature, reviews technical assessments, and examines data and information on the effectiveness and appropriateness of medical items and services that are covered or eligible for coverage under Medicare. The Committee works from an agenda provided by the Designated Federal Official that lists specific issues, and develops technical advice in order to assist us in determining reasonable and necessary applications of medical services and technology.

II. Provision of This Notice

This notice announces the signing of the MCAC Charter Amendment on October 30, 2002 and the renewal by the Secretary on November 22, 2002. The Charter will terminate on November 22, 2004, unless renewed by the Secretary.

III. Copies of the Charter

You may obtain a copy of the Secretary's Charter for the MCAC by submitting a request to Maria Ellis, Office of Clinical Standards and Quality, CMS, 7500 Security Blvd., Mail Stop S3–02–01, Baltimore, MD 21244, 410–786–0309, or e-mail the request to *mellis@cms.hhs.gov.*

Authority: 5 U.S.C. App. 2, section 10(a)(1) and (a)(2).

(Catalog of Federal Domestic Assistance Program No. 93.774, Medicare—Supplementary Medical Insurance Program)

Dated: December 17, 2002.

Robert A. Streimer,

Acting Director, Office of Clinical Standards and , Quality, Centers for Medicare & Medicaid Services.

[FR Doc. 02–32653 Filed 12–26–02; 8:45 am]

BILLING CODE 4120–01–P

DEPARTMENT OF HEALTH AND HUMAN SERVICES

Centers for Medicare and Medicaid Services

[CMS–9015–N]

Medicare and Medicaid Programs; Quarterly Listing of Program Issuances—July 2002 Through September 2002

AGENCY: Centers for Medicare & Medicaid Services (CMS), HHS.

ACTION: Notice.

SUMMARY: This notice lists CMS manual instructions, substantive and interpretive regulations, and other **Federal Register** notices that were published from July 2002, through September 2002, relating to the Medicare and Medicaid programs. This notice also provides information on national coverage determinations affecting specific medical and health care services under Medicare. Additionally, this notice identifies certain devices with investigational device exemption numbers approved by the Food and Drug Administration that potentially may be covered under Medicare.

Section 1871(c) of the Social Security Act requires that we publish a list of Medicare issuances in the **Federal Register** at least every 3 months. Although we are not mandated to do so by statute, for the sake of completeness of the listing, we are also including all Medicaid issuances and Medicare and Medicaid substantive and interpretive regulations (proposed and final) published during this timeframe.

FOR FURTHER INFORMATION CONTACT: It is possible that an interested party may have a specific information need and not be able to determine from the listed information whether the issuance or regulation would fulfill that need. Consequently, we are providing information contact persons to answer

general questions concerning these items. Copies are not available through the contact persons. (*See* section III of this notice for how to obtain listed material.)

Questions concerning items in Addendum III may be addressed to Karen Bowman, Office of Strategic Operations and Regulatory Affairs, Centers for Medicare & Medicaid Services, C5–16–03, 7500 Security Boulevard, Baltimore, MD 21244–1850, (410) 786–5252.

Questions concerning national coverage determinations should be directed to Shana Olshan, Office of Clinical Standards and Quality, Centers for Medicare & Medicaid Services, C1–09–06, 7500 Security Boulevard, Baltimore, MD 21244–1850, (410) 786–3122.

Questions concerning Investigational Device Exemptions items in Addendum VI may be addressed to Sharron Hippler, Office of Clinical Standards and Quality, Centers for Medicare & Medicaid Services, C5–13–27, 7500 Security Boulevard, Baltimore, MD 21244–1850, (410) 786–4633.

Questions concerning all other information may be addressed to Misty Whitaker, Office of Strategic Operations and Regulatory Affairs, Regulations Development and Issuances Group, Centers for Medicare & Medicaid Services, C5–10–24, 7500 Security Boulevard, Baltimore, MD 21244–1850, (410) 786–3087.

SUPPLEMENTARY INFORMATION:

I. Program Issuances

The Centers for Medicare & Medicaid Services (CMS) is responsible for administering the Medicare and Medicaid programs. These programs pay for health care and related services for 39 million Medicare beneficiaries and 35 million Medicaid recipients. Administration of these programs involves (1) furnishing information to Medicare beneficiaries and Medicaid recipients, health care providers, and the public and (2) maintaining effective communications with regional offices, State governments, State Medicaid agencies, State survey agencies, various providers of health care, fiscal intermediaries and carriers that process claims and pay bills, and others. To implement the various statutes on which the programs are based, we issue regulations under the authority granted to the Secretary of the Department of Health and Human Services under sections 1102, 1871, 1902, and related provisions of the Social Security Act (the Act). We also issue various manuals, memoranda, and statements necessary to administer the programs efficiently.

Section 1871(c)(1) of the Act requires that we publish a list of all Medicare manual instructions, interpretive rules, statements of policy, and guidelines of general applicability not issued as regulations at least every 3 months in the **Federal Register.** We published our first notice June 9, 1988 (53 FR 21730). Although we are not mandated to do so by statute, for the sake of completeness of the listing of operational and policy statements, we are continuing our practice of including Medicare substantive and interpretive regulations (proposed and final) published during the 3-month timeframe.

II. How To Use the Addenda

This notice is organized so that a reader may review the subjects of manual issuances, memoranda, substantive and interpretive regulations, national coverage determinations, and Food and Drug Administration-approved investigational device exemptions published during the timeframe to determine whether any are of particular interest. We expect this notice to be used in concert with previously published notices. Those unfamiliar with a description of our Medicare manuals may wish to review Table I of our first three notices (53 FR 21730, 53 FR 36891, and 53 FR 50577) published in 1988, and the notice published March 31, 1993 (58 FR 16837). Those desiring information on the Medicare Coverage Issues Manual may wish to review the August 21, 1989, publication (54 FR 34555). Those interested in the procedures used in making national coverage determinations may review the April 27, 1999, publication (64 FR 22619). In this publication, the 1989 proposed rule affecting national coverage procedures and decisions (54 FR 4302) was withdrawn, and the procedures for national coverage determinations established.

To aid the reader, we have organized and divided this current listing into six addenda:

- Addendum I lists the publication dates of the most recent quarterly listings of program issuances.
- Addendum II identifies previous **Federal Register** documents that contain a description of all previously published CMS Medicare and Medicaid manuals and memoranda.
- Addendum III lists a unique CMS transmittal number for each instruction in our manuals or Program Memoranda and its subject matter. A transmittal may consist of a single instruction or many. Often, it is necessary to use information in a transmittal in conjunction with information currently in the manuals.
- Addendum IV lists all substantive and interpretive Medicare and Medicaid regulations and general notices published in the **Federal Register** during the quarters covered by this notice. For each item we list the—

—Date published;

—**Federal Register** citation;

—Parts of the Code of Federal Regulations (CFR) that have changed (if applicable);

—Agency file code number; and

—Title of the regulation.

- Addendum V includes completed national coverage determinations from the quarter covered by this notice. Completed decisions are identified by title, a brief description, effective date, and section in the appropriate Federal publication.
- Addendum VI includes listings of the Food and Drug Administration-approved investigational device exemption categorizations, using the investigational device exemption numbers the Food and Drug Administration assigns. The listings are organized according to the categories to which the device numbers are assigned (that is, Category A or Category B), and identified by the investigational device exemption number.)

III. How To Obtain Listed Material

A. Manuals

Those wishing to subscribe to program manuals should contact either the Government Printing Office (GPO) or the National Technical Information Service (NTIS) at the following addresses: Superintendent of Documents, Government Printing Office, Attn: New Orders, P.O. Box 371954, Pittsburgh, PA 15250–7954, Telephone (202) 512–1800, Fax number (202) 512–2250 (for credit card orders); or National Technical Information Service, Department of Commerce, 5825 Port Royal Road, Springfield. VA 22161, Telephone (703) 487–4630.

In addition, individual manual transmittals and Program Memoranda listed in this notice can be purchased from NTIS. Interested parties should identify the transmittal(s) they want. GPO or NTIS can give complete details on how to obtain the publications they sell. Additionally, most manuals are available at the following Internet address: *http://cms.hhs.gov/manuals/default.asp.*

B. Regulations and Notices

Regulations and notices are published in the daily **Federal Register**. Interested individuals may purchase individual

copies or subscribe to the **Federal Register** by contacting the GPO at the address given above. When ordering individual copies, it is necessary to cite either the date of publication or the volume number and page number.

The **Federal Register** is also available on 24x microfiche and as an online database through *GPO Access.* The online database is updated by 6 a.m. each day the **Federal Register** is published. The database includes both text and graphics from Volume 59, Number 1 (January 2, 1994) forward. Free public access is available on a Wide Area Information Server (WAIS) through the Internet and via asynchronous dial-in. Internet users can access the database by using the World Wide Web; the Superintendent of Documents home page address is *http://www.access.gpo.gov/nara/index.html,* by using local WAIS client software, or by telnet to *swais.access.gpo.gov,* then log in as guest (no password required). Dial-in users should use communications software and modem to call (202) 512–1661; type swais, then log in as guest (no password required).

C. Rulings

We publish rulings on an infrequent basis. Interested individuals can obtain copies from the nearest CMS Regional Office or review them at the nearest regional depository library. We have, on occasion, published rulings in the **Federal Register**. Rulings, beginning with those released in 1995, are available online, through the CMS Home Page. The Internet address is *http://cms.hhs.gov/rulings.*

D. CMS's Compact Disk-Read Only Memory (CD–ROM)

Our laws, regulations, and manuals are also available on CD–ROM and may be purchased from GPO or NTIS on a subscription or single copy basis. The Superintendent of Documents list ID is HCLRM, as the stock number is: 717–319–00000–3. The following material is on the CD–ROM disk:

- Titles XI, XVIII, and XIX of the Act.
- CMS-related regulations.
- CMS manuals and monthly revisions.
- CMS program memoranda.

The titles of the Compilation of the Social Security Laws are current as of January 1, 1999. (Updated titles of the Social Security Laws are available on the Internet at *http:www.ssa.gov/OP_Home/ssact/comp-toc.htm*) The remaining portions of CD–ROM are updated on a monthly basis.

Because of complaints about the unreadability of the Appendices (Interpretive Guidelines) in the State Operations Manual (SOM), as of March 1995, we deleted these appendices from CD–ROM. We intend to re-visit this issue in the near future and, with the aid of newer technology, we may again be able to include the appendices on CD–ROM.

Any cost reports forms incorporated in the manuals are included on the CD–ROM disk as LOTUS files. LOTUS software is needed to view the reports once the files have been copied to a personal computer disk.

IV. How To Review Listed Material

Transmittal or Program Memoranda can be reviewed at a Local Federal Depository Library (FDL). Under the FDL program, government publications are sent to approximately 1,400 designated libraries throughout the United States. Some FDLs may have arrangements to transfer material to a local library not designated as an FDL. Contact any library to locate the nearest FDL.

In addition, individuals may contact regional depository libraries that receive and retain at least one copy of most Federal Government publications, either in printed or microfilm form, for use by the general public. These libraries provide reference services and interlibrary loans; however, they are not sales outlets. Individuals may obtain information about the location of the nearest regional depository library from any library.

Superintendent of Documents numbers for each CMS publication are shown in Addendum III, along with the CMS publication and transmittal numbers. To help FDLs locate the materials, use the Superintendent of Documents number, plus the transmittal number. For example, to find the Part 3—Program Administration, (CMS Pub. 14–3) transmittal entitled ''Payment Requirements,'' use the Superintendent of Documents No. HE 22.8/7 and the transmittal number 1758.

(Catalog of Federal Domestic Assistance Program No. 93.773, Medicare—Hospital Insurance, Program No. 93.774, Medicare—Supplementary Medical Insurance Program, and Program No. 93.714, Medical Assistance Program)

Dated: December 16, 2002.

Jacquelyn Y. White,

Director, Office of Strategic Operations and Regulatory Affairs.

Addendum I

This addendum lists the publication dates of the most recent quarterly listings of program issuances.

August 11, 1998 (63 FR 42857)
September 16, 1998 (63 FR 49598)
December 9, 1998 (63 FR 67899)
May 11, 1999 (64 FR 25351)
November 2, 1999 (64 FR 59185)
December 7, 1999 (64 FR 68357)
January 10, 2000 (65 FR 1400)
May 30, 2000 (65 FR 34481)
June 28, 2002 (67 FR 43762)
September 27, 2002 (67 FR 61130)

Addendum II—Description of Manuals, Memoranda, and HCFA Rulings

An extensive descriptive listing of Medicare manuals and memoranda was published on June 9, 1988, at 53 FR 21730 and supplemented on September 22, 1988, at 53 FR 36891 and December 16, 1988, at 53 FR 50577. Also, a complete description of the Medicare Coverage Issues Manual was published on August 21, 1989, at 54 FR 34555. (Please note that in this publication the 1989 proposed rule referred to, concerning the criteria for national coverage determinations, was withdrawn (64 FR 22619)). A brief description of the various Medicaid manuals and memoranda that we maintain was published on October 6, 1992 (57 FR 47468).

ADDENDUM III.—MEDICARE AND MEDICAID MANUAL INSTRUCTIONS

[July 2002 Through September 2002]

Transmittal No.	Manual/Subject/Publication No.
	Intermediary Manual **Part 2—Audits, Reimbursement Program Administration** **(CMS Pub. 13–2)** **(Superintendent of Documents No. HE 22.8/6–2)**
420	• Provider Services

ADDENDUM III.—MEDICARE AND MEDICAID MANUAL INSTRUCTIONS—Continued

[July 2002 Through September 2002]

Transmittal No.		Manual/Subject/Publication No.
		Intermediary Manual **Part 3—Claims Process** **(CMS Pub. 13–3)** **(Superintendent of Documents No. HE 22.8/6)**
1858	•	Claims Processing Timeliness
1859	•	Coding for Adequacy of Hemodialysis
1860	•	Payment for Services Furnished by a Critical Access Hospital
1861	•	Definitions
1862	•	ICD–9–CM Coding for Diagnostic Tests
		Carriers Manual **Part 3—Program Administration** **(CMS Pub. 14–2)** **(Superintendent of Documents No. HE 22.8/7–3)**
145	•	Provider Services
		Carriers Manual **Part 3—Program Administration** **(CMS Pub. 14–3)** **(Superintendent of Documents No. HE 22.8/7)**
1757	•	Durable Medical Equipment Regional Carriers Mandatory Assignment for Drug Claims
1758	•	Payment Requirements
		Roster Claim Form
1759	•	Splitting Claims for Processing
1760	•	Participating Physician/Supplier Report
		Purpose and Scope
		Definitions of Columns One Through Eight
		Definitions of Lines One Through One Hundred Fifteen
		Checking Reports
		Exhibits
1761	•	Completing Quarterly Report on Provider Enrollment
		Checking Reports
		Type of Provider
		Completing Lines Twelve Through Seventeen—Reason for Denial
		Completing Lines Eighteen Through Twenty-Two-Reason for Return
		Exhibits
1762	•	Diabetes Outpatient Self-Management Training Services
		General Conditions of Coverage and Diabetes Training Hours
		Beneficiaries Eligible for Coverage
		Provider/Supplier Eligibility to Provide the Training
		Quality Standards
		Enrollment of Entities Other Than Durable Medical Equipment Prosthetic, Orthotics & Supplies
		Health Common Procedure Coding System Coding
		General Payment Conditions
1763	•	The ''Do Not Forward'' Initiative
1764	•	Services and Supplies
		Incident to Physician's Professional Services
		Services of Nonphysician Personnel Furnished Incident to Physicians Services
1765	•	Medicare Physician Fee Schedule Database 2003 File Layout
		Medicare Physician Fee Schedule Database Status Indicators
		Maintenance Process for the Medicare Physician Fee Schedule Database
1766	•	Anesthesia Services and Teaching Certified Registered Nurse Anesthetist
1767	•	Entitlement and Enrollment
1768	•	Identifying a Screening Mammography Claim and a Diagnostic
		Mammography Claim
1769	•	Method for Computing Fee Schedule Amounts
		Coding for Diagnostic Tests
1770	•	General Resolution of Common Working File 5232 Rejects
1771	•	Mandatory Assignment and Other Requirements for Home Dialysis Supplies and Equipment Paid Under Method II
		Program Memorandum **Intermediaries (CMS Pub. 60A)** **Superintendent of Documents No. HE 22.8/6–5)**
A–02–057	•	Medicare Part A Skilled Nursing Facility Prospective Payment System Update
A–02–058	•	Inpatient Rehabilitation Facility Annual Update: Prospective Payment System Pricer Changes for FY 2003
A–02–059	•	Medicare Program—Update to the Hospice Payment Rates, Hospice Cap, Hospice Wage Index and the Hospice Pricer for FY 2003

ADDENDUM III.—MEDICARE AND MEDICAID MANUAL INSTRUCTIONS—Continued

[July 2002 Through September 2002]

Transmittal No.	Manual/Subject/Publication No.
A–02–060	• Revision to Billing for Swing Bed Services Under Skilled Nursing Facility Prospective Payment System
A–02–061	• Medicare Program—Update to the Prospective Payment System for Home Health Agencies for Fiscal Year 2003
A–02–062	• Applicable Bill Type for Ambulance Services (Revenue Code 540)
A–02–063	• Scheduled Release for October Updates to Software Programs and Pricing/Coding Files
A–02–064	• Excluding Hospitals that Provide Part B Only Services to Their Inpatients from the Outpatient Prospective Payment System
A–02–065–	• Implementation of the Transmission Control Protocol/Internet Protocol for the Health Insurance Portability and Accountability Act Health Care Eligibility Benefit Inquiry And Response Transaction (270/271) Standard
A–02–066–	• Department of Veterans Affairs Claims Adjudication Services Project: Systems Changes Needed
A–02–067	• Production of Flat Files to Enable Centers for Medicare and Medicaid Services to Populate the Online Survey, Certification and Reporting Online Survey, Certification and Reporting System with the Provider Taxpayer Identification Number
A–02–068	• Enhancements to Home Health Prospective Payment System Claims Processing
A–02–069–	• Health Insurance Protability and Accountability Act Institutional 837 Health Care Claim Additional Implementation Direction
A–02–070	• Health Insurance Portability and Accountability Act Transaction 835v4010 Completion Update
A–02–071	• Updated Instruction on Receipt and Processing of Non-Covered Charges on Other Than Part A Inpatient Claims
A–02–072	• Implementation of the Provider Enrollment, Chain and Ownership System
A–02–073	• Financial Report Instructions for the Fiscal Intermediary Shared System Recovery Tracking System
A–02–074	• Hospital Outpatient Prospective Payment System Implementation Instructions
A–02–075	• Admitting Diagnosis for Observation for the Outpatient Prospective Payment System
A–02–076	• October 2002 Update to the Hospital Outpatient Prospective Payment System
A–02–077	• Intermediaries Must Adjust Their Translators for Reporting Line Item Dates, and Healthcare Common Procedure Coding System Codes for Part A Outpatient Claims
A–02–078	• Health Insurance Portability and Accountability Act Institutional 837 Health Care Claim—Direct Data Entry Updates
A–02–079	• Data Fields that the Fiscal Intermediaries are Required to Enter into the Provider Enrollment, Chain and Ownership System
A–02–080	• October Medicare Outpatient Code Editor Specifications Version 18.0 for Bills From Hospitals That Are Not Paid Under the Outpatient Prospective Payment System
A–02–081	• Modification of Audit and Cost Report Settlement Expectations in Change Request 1468
A–02–082	• October Outpatient Code Editor Specifications Version (V3.2)
A–02–083	• System Tracking for Audit and Reimbursement Instructions: End Stage Renal Disease Audits and Hospice Cost Reports
A–02–084	• Fiscal Year 2003 Prospective Payment System Hospital, Skilled Nursing Facility and Other
A–02–085	• Applicable Bill Types for Ambulance Services (Revenue Code 540)
A–02–086	• The Supplemental Income/Medicare Beneficiary Data for Fiscal Year 2001 For Inpatient Prospective Payment System Hospitals
A–02–087	• Clarification of Provider Billing Requirements Under the Outpatient Prospecitve Payment System
A–02–088	• Installation of Version 28.0 of the Provider Statistical and Reimbursement Report
A–02–089	• Temporary Procedures for Cost-Based Payments for Certified Registered Nurse Anesthetists Services Furnished by Outpatient Prosepctive Payment System Hospitals
A–02–090	• File Descriptions and Instructions for Retrieving the 2003 Physician, Clinical Lab, Durable Medical Equipment, Prosthetics/Orthotics and Supplies, and Therapy Fee Schedule Payment Amounts through CMS's Mainframe Telecommunications Systems
A–02–091	• Modifications to the Health Care Eligibility Benefit Response (271) and Direct Data Entry Screens for Home Health Agencies and Hospice Providers
A–02–092	• Corrections to: Changes to the Hospital Inpatient Prospective Payment Systems and Rates and Costs of Graduate Medical Education, etc.; as Published in the Federal Register, FY 2002 (66 FR 39828, August 1, 2001) and FY 2003 (67 FR 49982, August 1, 2002)
A–02–093	• Instructions for Implementing the Long-Term Care Hospital Prospective Payment System
	Program Memorandum Carriers (CMS Pub. 60B) (Superintendent of Documents No. HE 22.8/6–5)
B–02–039	• Common Working File Category Changes
B–02–040	• Common Working File Category Changes
B–02–041	• Billing for Implanted Durabale Medical Equipment, Prosthetic Devices, Replacement Parts, Accessories and Supplies
B–02–042	• Transmittal B–02–042 was resscinded and will not be used in the future
B–02–043	• Acceptance of Special Characters in the Common Working File and the Durable Medical Equipment Regional Carrier Standard System
B–02–044	• Change in Jurisdiction for Topical Hyperbaric Oxygen Chamber
B–02–045	• VIPS Medicare System Implemntation to Process ICD–9–CM Codes Using Date of Service and Not Date of Receipt
B–02–046	• Updating the Carrier Locality Edit at the Common Working File
B–02–047	• Durable Medical Equipment Regional Carrier—Appeal Messages on Medicare Summary Notice and Medicare Remit Notice
B–02–048	• Reasonable Charge Data Disclosure Requirements for Ambulance Services
B–02–049	• Common Working File Change for Billing for Glucose Test Strips and Supplies—Follow-up to Change Request 1612
B–02–050	• Additional Remark Code for Claims of Therapy Services Possibly Subject to Home Health Conslidated Billing
B–02–051	• Implementation of the Health Insurance Portability and Accountability Act Health Care Eligiblity Benefit Inquiry/Response Transaction (270/271) Standard
B–02–052	• Implementation of the National Council for Prescription Drug Programs Telecommunications Standard Version 5.1 and the Equivalent Batch Standard Version for Retail Pharmacy Drug Transactions
B–02–053	• Implementation of the ASC X12N 278 Version 4010 Implmentation Guide for Electronic Referral Certification and Authorization
B–02–054	• Sending Copies of Appeal Notices to Appointed Representatives, Including the Amount in Controversy Remaining in Review Determination Letters, and Using Bullets in Appeals Correspondence
B–02–055	• Updates to the Place of Service Code Set

ADDENDUM III.—MEDICARE AND MEDICAID MANUAL INSTRUCTIONS—Continued

[July 2002 Through September 2002]

Transmittal No.	Manual/Subject/Publication No.
B–02–056	• Furlong Lawsuit Settlement Payments
B–02–057	• Addition to Two ''WW'' Codes to Identify a New Source for Etoposide
B–02–058	• Changes to Correct Coding Edits, Version 9.0, Effective January 1, 2003
B–02–059	• Activation of the Automated Unsolicited Response for Skilled Nursing Facility Consolidated Billing and Global Payment Demonstrations
B–02–060	• Payment Policy When More Than One Patient is Onboard an Ambulance
B–02–061	• Schedule for Completing the Calendar year 2003 Fee Schedule Updates and the Participating Physician Enrollment Procedures
	Program Memorandum Intermediaries/Carriers (CMS Pub. 60A/B) (Superintendent of Documents No. HE 22.8/6–5)
AB–02–091	• New Waived Tests—June 17, 2002
AB–02–092	• Procedures Subject to Home Health Consolidated Billing
AB–02–093	• Coverage and Billing for Intravenous Immune Globulin (IVIg) for the Treatment of Autoimmune Muccocutaneous Blistering Diseases
AB–02–094	• Disclosure Desk Reference for Call Centers
AB–02–095	• Prohibition on New Trading Partner Agreements with Certain Entities For the Purpose of Coordination of Benefits
AB–02–096	• Coverage and Billing of the Diagnosis and Treatment of Peripheral Neuropathy With Loss of Protective Senation in People with Diabetes
AB–02–097	• Carrier, Durable Medical Equipment Regional Carrier Intermediary and Regional Home Health Intermediary Processing Requirements for Claims Edited by Common Working File for Medicare Beneficiaries in State or Local Custody Under a Penal Authority
AB–02–098	• Process for Entering Local Medical Review Policies and Certain Articles and Frequently Asked Questions into the Medicare Coverage Database
AB–02–099	• Standardize the CICS Level, CICS Transaction Server 1.3 to be Utilized by All Medicare Contractors
AB–02–100	• Modification of Medicare Policy for Erythropoietin
AB–02–101	• Changes to Common Working File Edits for Skilled Nursing Facility Consolidated Billing
AB–02–102	• Medicare Secondary Payer Debt Referral and Write Off Closed Instructions; (1) Expansion and Clarification of Medicare Secondary Payer Debt Collections Improvement Act of 1996 Activities; (2) Additional ''Write—Off—Closed Instructions'' (Supplemental Instructions for PM AB–01–24)
AB–02–103	• Expand Standard Date Format and Review Common Working File Y2K Wrapper Logic for Beneficiary Cross Reference Internal Files and Satellite File Header and Response Records
AB–02–104	• October Quarterly Update for 2002 Durable Medical Equipment, Prosthetics, Orthotics, and Supplies Fee Schedule
AB–02–105	• Medical Review of Medicare Payments for Nail Debridgement Services
AB–02–106	• Medicare Summary Notice—Inclusion of Appeals Information, Removal of Fraud References and Office of Inspector General's Hotline Number
AB–02–107	• Modify Application of ''I'' Validity Medicare Secondary Payor Records to the Common Working File by Medicare Contractors
AB–02–108	• Clarification of Medicare Contractor Financial Reporting Instructions Outlined in Section 1900—Section 19602.21 of the Medicare Intermediary Manual and Section 4900—Section 4960.14 of the Medicare Carriers Manual (Issued May 2001)
AB–02–109	• Common Working File, Fiscal Intermediary and Carrier Edits and Policy Clarification for Peripheral Neuropathy With Loss of Protective Sensation in People with Diabetes
AB–02–110	• Implementation of National Coverage Determinations Regarding Clinical Determinations Regarding Clinical Diagnostic Laboratory Services
AB–02–111	• Implementation of Certain Initial Determination and Appeal Provisions Within § 521 of the Medicare, Medicaid and State Child Health Insurance Program Benefits Improvement and Protection Act of 2000
AB–02–112	• Final Update to the 2002 Medicare Physician Fee Schedule Database
AB–02–113	• Elimination of Official Level III Healthcare Common Procedure Coding System Codes/Modifiers and Unapproved Local Codes/Modifiers and Unapproved Local Codes/Modifiers
AB–02–114	• Advanced Beneficiary Notice and Durable Medical Equipment Prosthetics, Orthotics & Supplies Refund Requirements—Implementation of Form CMS–R–131 Advance Beneficiary Notice, and of Limits on Beneficiary Liability for Medicare Equipment and Supplies
AB–02–115	• Expanded Coverage of Position Emission Tomography Scans and Related Claims Processing Changes
AB–02–116	• Data Center Testing and Production—Electronic Correspondence Referral System User Manual 5.0
AB–02–117	• Transition Schedule for Implementation of the Ambulance Fee Schedule
AB–02–118	• Notice of Interest Rate for Medicare Overpayment and Underpayments
AB–02–119	• Medicare Coordinated Care Demonstration Payment for Railroad Retirement Beneficiaries
AB–02–120	• Coding Instructions for IN–111 Zevalin and Y–90 Zevalin
AB–02–121	• Provider/Supplier Plan Quarterly Report Format
AB–02–122	• Appeals Quality Improvement and Data Analysis Activities
AB–02–123	• Information on Medicare+Choice Private Fee-for-Service Plans—Information Only
AB–02–124	• Updates of Rates and Wage Index for Ambulatory Surgical Center Payment Effective October 1, 2002
AB–02–125	• Provider Education Article: Durable Medical Equipment Ordered With Surrogate Unique Physician Identification Number
AB–02–126	• Establishing a Uniform Process for the Preparation and Mailing of Case Files From The Contractor, the Office of Hearings and Appeals, of the Social Security Administration
AB–02–127	• Program Management Provider/Supplier Education and Training
AB–02–128	• Coverage and Billing for Percutaneous Image-Guided Breast Biopsy
AB–02–129	• Claims Processing Requirements for Clinical Diagnostic Laboratory Services Based on the Negotiated Rulemaking

ADDENDUM III.—MEDICARE AND MEDICAID MANUAL INSTRUCTIONS—Continued

[July 2002 Through September 2002]

Transmittal No.	Manual/Subject/Publication No.
AB–02–130	• Definitions of Ambulance Services
AB–02–131	• Clarification of Medicare Policy Regarding the Implementation of the Ambulance Fee Schedule
AB–02–132	• Year 2003 Healthcare Common Procedure Coding System Annual Update Reminder
AB–02–133	• Publication and Maintenance of a Directory of Electronic Billing Ventors
	Hospital Manual (CMS Pub. 10) (Superintendent of Documents No. HE 22.8/2)
787	• Coding for Adequacy of Hemodialysis
788	• Payment for Services Furnished by a Critical Access Hospital
789	• General Information About the Program
790	• ICD–9–CM Coding for Diagnostic Tests
	Home Health Agency Manual (CMS—Pub. 11) (Superintendent of Documents No. HE 22.8/5)
302	• Combined to the Home
303	• General Information About the Program
	Skilled Nursing Facility Manual (CMS—Pub. 12) (Superintendent of Documents No. HE 22.8/3)
373	• Coverage and Patient Classification
374	• General Information About the Program
	Hospice Manual (CMS—Pub. 21) (Superintendent of Documents No. HE 22.8/18)
65	• General Information About the Program
	Outpatient Physical Therapy and Comprehensive Outpatient Rehabilitation Facility Manual (CMS—Pub. 9) (Superintendent of Documents No. HE 22.8/9)
16	• General Information About the Program
	Coverage Issues Manual (CMS—Pub. 6) (Superintendent of Documents No. HE 22.8/14)
157	• Photodynamic Therapy
	• Photosensitive Drugs
158	• Speech Generating Devices
159	• Percutaneous Image-Guided Breast Biopsy
	Rural Health Clinic Manual & Federally Qualified Health Centers Manual (CMS—Pub. 27) (Superintendent of Documents No. HE 22.8/19:985)
37	• General Information About the Program
	Rural Dialysis Facility Manual (Non-Hospital Operated) (CMS—Pub. 29) (Superintendent of Documents No. HE 22.8/13)
93	• Coding for Adequacy of Hemodialysis
	Provider Reimbursement Manual—Part 2 Provider Cost Reporting Forms and Instructions Chapter 36/Form CMS–2552–96 (CMS Pub. 15–2–36)
9	• Hospital and Hospital Healthcare Complex Cost Report

ADDENDUM III.—MEDICARE AND MEDICAID MANUAL INSTRUCTIONS—Continued

[July 2002 Through September 2002]

Transmittal No.	Manual/Subject/Publication No.
	Medicare Program Integrity Manual (CMS—Pub. 100–8)
27	• Contractor must review Local Medical Review Policy
28	• Local Medical Review Policies Reconsideration Process
29	• Introduction
	Definitions Related to Enrollment
	Applicant versus Provider/Supplier
	General Instructions
	Forms
	Contractors
	Forms Disposition
	Application Sectional Instructions for Carriers
	Processing the Application
	Identification
	Adverse Legal Actions
	Practice Location
	Ownership and Managing Control Information (Organizations)
	Ownership and Managing Control Information (Individuals)
	Chain Home Office Information
	Billing Agency
	Electronic Claims Submission Information
	Staffing Company
	Surety Bond Information
	Capitalization Requirement for Home Health Agencies
	Contact Person
	Penalties for Falsifying Information on This Enrollment Application
	Certification Statement
	Delegate Official
	Attachment
	Ambulance Services Suppliers—Attachment 1
	State License Information
	Description of Vehicle
	Qualification of Crew
	Certified Basic Life Support
	Certified Advanced Life Support
	Medical Director Information
	Independent Diagnostic Testing Facilities—Attachment 2
	Entities That Must Enroll as Independent Diagnostic Testing Facilities
	Review of Attachment 2, Independent Diagnostic Testing Facility
	Enrollment Checks
	Special Considerations
	Reassignment of Benefits—Form CMS–855R
	Individual Reassignment of Medicare Benefits
	Supplier Identification
	Individual Practitioner Identification
	Practice Location
	Statement of Termination
	Reassignment of Benefits Statement
	Attestation Statement
	Enrolling Certified Suppliers Who Enroll With Carrier
	Managed Care Organization
	Application Sectional Instructions for Intermediaries
	Processing the Application
	Provider Identification
	Adverse Legal Actions
	Practice Location
	Special Processing Situations
	Community Metal Health Centers
	Benefit Improvement and Protection Act of 2000 Provisions
	Community Mental Health Centers Enrollment and Change of Ownership Site
	Visits
	Process
	Deactivation of Billing Numbers of Inactive Community Mental Health Centers
	State Survey/Regional Offices Process
	Changes in Requested Information—New Form CMS–855 Data
	Change Requirement
	Procedures for Request for Additional Information, Approval, Denial, or Transmission of Recommendations
	Request for Additional Information
	Approval

ADDENDUM III.—MEDICARE AND MEDICAID MANUAL INSTRUCTIONS—Continued

[July 2002 Through September 2002]

Transmittal No.		Manual/Subject/Publication No.
		Denials Failure to Sign and/or Date the Application Processing Matrix Verification and Validation of Information Fraud Investigation Database Healthcare Integrity and Protection Data Bank Social Security Death Index Uncovering Fraud and Abuse General Services Administration Debarment Special Processing Situations Mass Immunizers Who Roster Bill Opt-Out Physicians Enrollment of Hospitals, Assignment of Billing Numbers Railroad Retirement Board Mass Immunization and Roster Billers Site Visits Administrative Appeals Tracking Requirements Retention of Records Provider/Suppliers Education Web Site Security Safeguards Documentation
		Managed Care Manual (CMS–Pub. 100–16) (Superintendent of Documents No. HE 22)
10	•	Quality Assessment and Performance Improvement Projects General Non-Clinical Focus Areas-Non-Clinical Focus Areas Applicable Enrollees Quality Improvement System for Managed Care Document Standard Quality Assessment and Performance Improvement Projects Phase In Requirements Ongoing Requirements Document Standard Focus Areas Clinical Focus Area Applicable to All Enrollees Attributes of Quality Assessment and Performance Improvement Selection of Topics for Medicare+Choice Selected Projects and Local Marketplace Initiatives Sources of Information Medicare+Choice Using Physician Incentive Plans Quality Indicators Significant, Sustained Improvements Sustained Improvement Over Time Types of Quality Assurance Program Improvement Projects National Quality Assurance Program Improvement Projects Medicare+Choice Organization Selected Quality Assurance Program Improvement Projects Other Quality Assurance Program Improvement Projects Process for Centers for Medicare and Medicaid Services Multi-Year Quality Assurance Program Improvement Projects Approval Evaluation of Quality Assurance Program Improvement Projects Terminology Deeming Requirements General Rule Obligations of Deemed Medicare+Choice Organizations Deemed Status and Center for Medicare and Medicaid Services Surveys Removals of a Medicare+Choice Organization's Deemed Status Centers for Medicare and Medicaid Services Role Oversight of Accrediting Organizations Obligations of Accrediting Organizations with Deeming Authority Application Requirements Reporting Requirement Reconsideration of Application Denials, Removal of All Approval of Deeming Authority, or Non-Renewals of Deeming Authority Informal Hearing Procedures Informal Hearing Findings Final Reconsideration Determinations

ADDENDUM III.—MEDICARE AND MEDICAID MANUAL INSTRUCTIONS—Continued

[July 2002 Through September 2002]

Transmittal No.		Manual/Subject/Publication No.
		Background
		Specifics Applicable to Consumer Assessment of Health Plans Study and Health Plan
		Employer Data and Information Set
		Healthplan Employer Data Information Sets Submission Requirements
		The Medicare Health Outcomes Survey Requirements
		Medicare Consumer Assessment of Health Plan Survey Requirements for Enrollees And Disenrollees
11	•	Lock-in Requirements/Selecting a Primary Care Physician—How to Access Care in a Health Maintenance Organization's Emergency Care Cross Reference to Quality Improvement System for Managed Care 2.3.1.7
		Appeal Rights
		Benefits and Plan Premium Information
		Final Verifications Review Process
		Guidelines for Outreach Program
		Submission Requirements
		Center for Medicare and Medicaid Services Review/Approval Process
		Model Direct Mail Letter
		Answers to Frequently Asked Questions About Promotional Activities
		Relationship of Value-Added Items and Services to Benefits and Other Operational Considerations
		Non Benefit Providing Third Party Marketing Materials
		Marketing Material Requirements for Non-English Speaking Populations Standard 2.3.3.2
12	•	Definitions
		Eligibility for Enrollment in Medicare+Choice Plans
		Completion of Enrollment Form
		Election Periods and Effective Dates
		Annual Election Period
		Open Enrollment Period
		Open Enrollment Period Through 2004
		Open Enrollment Period Through 2005
		Open Enrollment Period in 2006 and Beyond
		Open Enrollment for Newly Eligible Individuals in 2005 and Beyond
		Special Election Period
		Special Election Period for Exceptional Conditions
		Special Election Period for Beneficiaries Aged 65
		Effective Date of Coverage
		Effective Date of Voluntary Disenrollment
		Enrollment Procedures
		Format of Enrollment Forms
		Medicare+Choice Organizational Denial of Enrollment
		After the Effective Date of Coverage
		Procedures After Reaching Capacity
		Disenrollment Procedures
		Voluntary Disenrollment by Member
		Medigap Guaranteed Issue Notification Requirements
		Members Who Change Residence
		Failure to Pay Premiums
		Disenrollment Procedure for Employer Group Health Plans
		Multiple Transactions
		Cancellation of Enrollment
		Reinstatement Due to Mistaken Disenrollment Made By Member
		Medicare/Medicaid Sanction—Reinstatement Report (CMS Pub. 69)
06–02	•	Report of Physicians/Practitioners, Providers and/or Other Health Care Suppliers Excluded/Reinstated—June 2002
07–02	•	Report of Physicians/Practitioners, Providers and/or Other Health Care Suppliers Excluded/Reinstated—July 2002
09–02	•	Report of Physicians/Practitioners, Providers and/or Other Health Care Suppliers Excluded/Reinstated—August 2002

ADDENDUM IV.—REGULATION DOCUMENTS PUBLISHED IN THE FEDERAL REGISTER

(July 2002 through September 2002)

Publication date	FR Vol. 67 page	CFR part(s)	File code*	Regulation title
07/01/2002	44073	42 CFR 412, and 413	CMS–1069–F2	Medicare Program; Prospective Payment System for Inpatient Rehabilitation Facilities; Correcting Amendment.
07/17/2002	46949	42 CFR Chap. IV	CMS–1227–N	Medicare Program; Town Hall Meeting on the Outcome Assessment Information Set (OASIS).

ADDENDUM IV.—REGULATION DOCUMENTS PUBLISHED IN THE FEDERAL REGISTER—Continued

(July 2002 through September 2002)

Publication date	FR Vol. 67 page	CFR part(s)	File code*	Regulation title
07/26/2002	48800	42 CFR 405	CMS–3074–F2	Medicare Program; End-Stage Renal Disease: Removing of Waiver Conditions for Coverage Under a State of Emergency in the Houston, Texas Area.
07/26/2002	48801	42 CFR 413	CMS–1883–F3	Medicare Program; Revision of the Procedures for Requesting Exceptions to Cost Limits for Skilled Nursing Facilities and Elimination of Reclassifications; Technical Correction.
07/26/2002	48802	42 CFR 146	CMS–2033–IFC	Technical Change to Requirements for the Group Health Insurance Market; Non-Federal Governmental Plans Exempt From HIPPA Title I Requirements.
07/26/2002	48839	42 CFR Chap. IV	CMS–6012–N2	Medicare Program; Establishment of The Negotiated Rulemaking Committee on Special Payment Provisions and Requirements for Prosthetics and Certain Custom-Fabricate Orthotics; Meeting Announcement.
07/26/2002	48840	42 CFR 413	CMS–1199–P	Medicare Program; Electronic Submission of Cost Reports.
07/26/2002	48905		CMS–4037–N	Medicare Program; Meeting of the Advisory Panel on Medicare Education—September 26, 2002.
07/31/2002	49798		CMS–1202–N	Medicare Program; Prospective Payment System and Consolidated Billing for Skilled Nursing Facilities—Update.
08/01/2002	49928		CMS–1205–N	Medicare Program; Inpatient Rehabilitation Facility Prospective Payment System for FY 2003 Rates.
08/01/2002	49982	42 CFR 405, 412, 413, and 485.	CMS–1203–F	Medicare Program; Changes to the Hospital Inpatient Prospective Payment Systems and Fiscal Year 2003 Rates.
08/09/2002	52092	42 CFR 405, 410, and 419.	CMS–1206–P	Medicare Program; Changes to the Hospital Outpatient Prospective Payment System and Calendar Year 2003 Payment Rates; and Changes to Payment Suspension for Unfiled Cost Reports.
08/16/2002	53644	42 CFR 405, 410 and 419.	CMS–1206–P (OFR correction).	Medicare Program; Changes to the Hospital Outpatient Prospective Payment System and Calendar Year 2003 Payment Rates; and Changes to Payment Suspension for Unfiled Cost Reports; Correction.
08/22/2002	54532	42 CFR 438	CMS–2104–F	Medicare Program; Medicaid Managed Care: New Provisions.
08/22/2002	54534	42 CFR 400, 405, and 426.	CMS–3063–P	Medicare Program; Review of National Coverage Determinations and Local Coverage Determinations.
08/23/2002	54660		CMS–1216–N	Medicare Program; September 23 and 24, 2002, Meeting of the Practicing Physicians Advisory Council and Request for Nominations.
08/23/2002	54657		CMS–2140–FN	Medicare and Medicaid Programs; Approval of Deeming Authority for Critical Access Hospitals by the Joint Commission on Accreditation of Healthcare Organizations (JCAHO).
08/23/2002	54659		CMS–3098–N	Medicare Program; Meeting of the Executive Committee of the Medicare Coverage Advisory Committee—September 25, 2002.
08/30/2002	55851		CMS–2136–PN	Medicare Program; State Allotments for Payment of Medicare Part B Premiums for Qualifying Individuals: Federal Fiscal Year 2002.
08/30/2002	55954	42 CFR 412, 413 and 476.	CMS–1177–F	Medicare Program; Prospective Payment System for Long-Term Care Hospitals: Implementation and FY 2003 Rates.
08/30/2002	56092		CMS–1211–N	Medicare Program; Hospital Wage Index for Fiscal Year 2003.
09/04/2002	56618	42 CFR 403	CMS–4027–F	Medicare Program; Medicare-Endorsed Prescription Drug Card Assistance Initiative.
09/27/2002	60993	42 CFR 408	CMS–1221–F	Medicare Program; Supplementary Medical Insurance Premium Surcharge Agreements.
09/27/2002	61116		CMS–4043–N	Medicare Program; Solicitation for Proposals for the Physician Group Practice Demonstration.

ADDENDUM IV.—REGULATION DOCUMENTS PUBLISHED IN THE FEDERAL REGISTER—Continued

(July 2002 through September 2002)

Publication date	FR Vol. 67 page	CFR part(s)	File code*	Regulation title
09/27/2002	61130		CMS–9014–N	Medicare and Medicaid Programs: Quarterly Listing of Program Issuances—April 2002 Through June 2002.

*N=General Notice; PN=Proposed Notice; NC=Notice with Comment Period; FN=Final Notice; P=Notice of Proposed Rulemaking (NPRM); F=Final Rule; FC=Final Rule with Comment Period; CN=Correction Notice; IFC=Interim FInal Rule with Comment Period; GNC=General Notice with Comment Period.

Addendum V—National Coverage Determinations (April 2002 Through June 2002)

A national coverage determination (NCD) is a determination by the Secretary with respect to whether or not a particular item or service is covered nationally under title XVIII of the Social Security Act, but does not include a determination of what code, if any, is assigned to a particular item or service covered under this title or determination with respect to the amount of payment made for a particular item or service so covered. We include below all of the NCDs that became effective during the quarter covered by this notice. The entries below include information concerning completed decisions as well as sections on program and decision memoranda, which also announce impending decisions or, in some cases, explain why it was not appropriate to issue a NCD. We identify completed decisions by title, effective date, and section of the publication where the decision can be found. Also, please note that in some cases more than one NCD was made affecting single procedure. Information on completed decisions as well as pending decisions has also been posted on the CMS Web site at *http://cms.hhs.gov/coverage.*

NATIONAL COVERAGE DECISIONS FOR QUARTERLY NOTICE

[Coverage Issues Manual—CMS Pub. 06]

Section	Title	Effective date
45–30	Photosensitive Drugs	January 1, 2003.
45–32	Levocarnitine for the Treatment of Carnitine Deficiency in ESRD Patients	January 1, 2003.
35–77	Neuromuscular Electrical	April 1, 2003.
35–102	Electrical Stimulation for Wound Healing	April 1, 2003.

PROGRAM MEMORANDA

PM number	Title	Effective date
No items for this quarterly notice.		

JOINT LETTER AND FEDERAL REGISTER PUBLICATION

Date	Title	Effective date
No items for this quarterly notice.		

Decision Memoranda Announcing Maintenance of Existing National Coverage Determination

The following decision memoranda announce the agency's intention to issue NCDs or they announce the agency's determination that NCDs are inappropriate and thus reasonable and necessary determinations are left to contractor discretion. The relevant sections of the Coverage Issues Manual, however, have not yet been revised. The revisions will occur at a later date.

Date of memo	Title	CIM section
No items for this quarterly notice.		

Addendum VI—Categorization of Food and Drug Administration-Allowed Investigational Device Exemptions

Under the Food, Drug, and Cosmetic Act (21 U.S.C. 360c), devices fall into one of three classes. Also, under the new categorization process to assist CMS, the Food and Drug Administration assigns each device with a Food and Drug Administration-approved investigational device exemption to one of two categories. To obtain more information about the classes or categories, please refer to the **Federal Register** notice published on April 21, 1997 (62 FR 19328).

The following information presents the device number and category (A or B).

Investigational Device Exemption Numbers, 2nd Quarter 2002

IDE/Category

G010013 B

G010134	B
G010188	B
G010328	B
G020002	B
G020025	A
G020030	B
G020046	B
G020048	B
G020050	B
G020051	B
G020052	B
G020054	B
G020056	A
G020057	B
G020061	B
G020062	B
G020063	B
G020064	B
G020065	B
G020068	B
G020070	B
G020072	B
G020073	B
G020075	B
G020079	B
G020080	B
G020082	B
G020085	B
G020087	B
G020090	B
G020092	B
G020094	B
G020096	B
G020097	B
G020098	B
G020099	B
G020100	B
G020106	B
G020107	B
G020108	B
G020109	B
G020112	B
G020113	B
G020114	B
G020116	A
G020119	B
G020121	B
G020122	B
G020126	B
G020127	A
G020130	B
G020132	B
G020133	B
G020135	B
G020165	B

[FR Doc. 02–32197 Filed 12–26–02; 8:45 am]

BILLING CODE 4120–01–M

DEPARTMENT OF HEALTH AND HUMAN SERVICES

Centers for Medicare & Medicaid Services

Notice of Hearing: Reconsideration of Disapproval of New Jersey State Plan Amendment 02–10

AGENCY: Centers for Medicare & Medicaid Services (CMS), HHS.

ACTION: Notice of hearing.

SUMMARY: This notice announces an administrative hearing to be held on February 4, 2003, 10 a.m., Centers for Medicare & Medicaid Services' New York Regional Office, 26 Federal Plaza, Room 38–110A; New York, New York 10278–0063, to reconsider our decision to disapprove New Jersey State Plan Amendment 02–10.

CLOSING DATE: Requests to participate in the hearing as a party must be received by the presiding officer by January 13, 2003.

FOR FURTHER INFORMATION CONTACT: Kathleen Scully-Hayes, Presiding Officer, CMS, 2520 Lord Baltimore Drive, Suite L, Baltimore, Maryland 21244–2670, Telephone: (410) 786–2055.

SUPPLEMENTARY INFORMATION: This notice announces an administrative hearing to reconsider the decision to disapprove New Jersey State Plan Amendment (SPA) 02–10. This SPA was disapproved on September 19, 2002. In this amendment, New Jersey proposes to establish a new target group for case management services for youth and young adults under the age of 21 who are in the care of the Juvenile Justice Commission as a result of a commitment order. The SPA further specifies that the target group is limited to youth and young adults who reside in their own homes, the homes of relatives, community-based residences or residential group centers, or other community-based living arrangements as a result of their original placement or conditional release from a public institution.

At issue is whether CMS properly concluded as a basis for disapproving the amendment that: (1) The State had not demonstrated that the proposed services were within the statutory definition of case management services found in section 1915(g)(2) of the Social Security Act (the Act); (2) the proposed services are available without charge to the user and thus payment under the amendment is not reasonable and necessary and would duplicate payment under other program authorities; and (3) the amendment would restrict beneficiary freedom of choice by limiting providers to employees of New Jersey's Juvenile Justice Commission.

Medicaid coverage of targeted case management is authorized by section 1915(g) of the Act, which defines case management as services that assist beneficiaries in gaining access to needed services and does not include the direct provision of those services. Because the services proposed as Medicaid targeted case management are segments of the State's juvenile justice program, CMS believes that they are integral components of the direct services and administrative functions of that juvenile justice program. In this instance, Medicaid payment for portions of the juvenile justice program would duplicate payment under other programs that are the responsibility of the State Government.

During CMS conversation with the State, section 8435 of the Technical and Miscellaneous Revenue Act of 1988, Public Law Number 100–647 was discussed. In this section, Congress clarified that the Secretary may not deny approval of either an SPA or a claim on the basis that the state is required to provide such services under state law, or is or was otherwise, paying for the services using non-Federal funds. However, section 8435 also expressly states that this was not to be construed to require the Secretary to make payment for case management services that are provided without charge to the users of such services. Approval of this amendment, therefore, would be contrary to this express statutory provision, since this SPA seeks payment from the Medicaid program for services that are available without charge to the users.

In addition, while states are free to set qualifications for providers, a state must comply with Medicaid law and regulations concerning freedom of choice at section 1902(a)(23) of the Act and the implementing regulation at 42 CFR 431.51. These provisions require that a state plan permit beneficiaries to obtain services from any qualified provider that undertakes to provide the services. Section 1915(g)(1) of the Act states, ''The provision of case management services under this subsection shall not restrict the choice of the individual to receive medical assistance in violation of section 1902(a)(23).'' The proposed SPA restricts beneficiary choice of case managers by imposing standards that are not reasonably related to the qualifications of providers, but instead limits available providers to employees of the Juvenile Justice Commission.

Section 1116 of the Act and 42 CFR Part 430 establish Department procedures that provide an administrative hearing for reconsideration of a disapproval of a state plan or plan amendment. The CMS is required to publish a copy of the notice to a state Medicaid agency that informs the agency of the time and place of the hearing and the issues to be considered. If we subsequently notify the agency of additional issues that will be considered at the hearing, we will also publish that notice.

Any individual or group that wants to participate in the hearing as a party

must petition the presiding officer within 15 days after publication of this notice, in accordance with the requirements contained at 42 CFR 430.76(b)(2). Any interested person or organization that wants to participate as amicus curiae must petition the presiding officer before the hearing begins in accordance with the requirements contained at 42 CFR 430.76(c). If the hearing is later rescheduled, the presiding officer will notify all participants. Therefore, based on the reasoning set forth above, and after consultation with the Secretary as required under 42 CFR 430.15(c)(2), CMS is disapproving New Jersey SPA 02–10.

The notice to New Jersey announcing an administrative hearing to reconsider the disapproval of its SPA reads as follows:

Ms. Kathryn A. Plant
Director, Division of Medical Assistance and Health Services, Department of Human Services, P.O. Box 712. Trenton, NJ 08625–0712.

Dear Ms. Plant: I am responding to your request for reconsideration of the decision to disapprove New Jersey State Plan Amendment (SPA) 02–10.

In the SPA, New Jersey proposes to establish a new target group for case management services for youth and young adults under the age of 21 who are in the care of the Juvenile Justice Commission as a result of a commitment order. The SPA further specifies that the target group is limited to youth and young adults who reside in their own homes, the homes of relatives, community-based residences or residential group centers, or other community-based living arrangements as a result of their original placement or conditional release from a public institution.

At issue is whether the Centers for Medicare & Medicaid Services (CMS) properly concluded as a basis for disapproving the amendment that: (1) The State had not demonstrated that the proposed services were within the statutory definition of case management services found in section 1915(g)(2) of the Social Security Act (the Act); (2) the proposed services are available without charge to the user and thus payment under the amendment is not reasonable and necessary and would duplicate payment under other program authorities; and (3) the amendment would restrict beneficiary freedom of choice by limiting providers to employees of New Jersey's Juvenile Justice Commission.

Medicaid coverage of targeted case management is authorized by section 1915(g) of the Act, which defines case management services as services that assist beneficiaries in gaining access to needed services and does not include the direct provision of those services. Because the services proposed as Medicaid targeted case management are segments of the State's juvenile justice program, CMS believes they are integral components of the direct services and administrative functions of that juvenile justice program. In this instance, Medicaid payment for portions of the juvenile justice program would duplicate payment under other programs that are the responsibility of the State Government.

During CMS' conversation with the State, section 8435 of the Technical and Miscellaneous Revenue Act of 1988, Public Law Number 100–647 was discussed. In this section, Congress clarified that the Secretary may not deny approval of either an SPA or a claim on the basis that the state is required to provide such services under state law, or is or was otherwise, paying for the services using non-Federal funds. However, section 8435 also expressly states that this was not to be construed to require the Secretary to make payment for case management services that are provided without charge to the users of such services. Approval of this amendment, therefore, would be contrary to this express statutory provision, since this SPA seeks payment from the Medicaid program for services that are available without charge to the users.

In addition, while states are free to set qualifications for providers, a state must comply with Medicaid law and regulations concerning freedom of choice at section 1902(a)(23) of the Act and the implementing regulation at 42 CFR 431.51. These provisions require that a state plan permit beneficiaries to obtain services from any qualified provider that undertakes to provide the services. Section 1915(g)(1) of the Act states, ''The provision of case management services under this subsection shall not restrict the choice of the individual to receive medical assistance in violation of section 1902(a)(23).'' The proposed SPA restricts beneficiary choice of case managers by imposing standards that are not reasonably related to the qualifications of providers, but instead limits available providers to employees of the Juvenile Justice Commission.

This notice announces an administrative hearing to be held on February 4, 2003, at 10 a.m., Centers for Medicare & Medicaid Services, New York Regional Office, 26 Federal Plaza, Room 38–110A; New York, New York 10278–0063.

If this date is not acceptable, we would be glad to set another date that is mutually agreeable to the parties. The hearing will be governed by the procedures prescribed at 42 CFR, part 430. I am designating Ms. Kathleen Scully-Hayes as the presiding officer. If these arrangements present any problems, please contact the presiding officer. In order to facilitate any communication which may be necessary between the parties to the hearing, please notify the presiding officer to indicate acceptability of the hearing date that has been scheduled and provide names of the individuals who will represent the State at the hearing. The presiding officer may be reached at (410) 786–2055.

Sincerely,

Thomas A. Scully

Section 1116 of the Social Security Act (42 U.S.C. section 1316); 42 CFR Section 430.18)

(Catalog of Federal Domestic Assistance Program No. 13.714, Medicaid Assistance Program)

Dated: December 19, 2002.

Thomas A. Scully,

Administrator, Centers for Medicare & Medicaid Services.

[FR Doc. 02–32654 Filed 12–26–02; 8:45 am]

BILLING CODE 4120–01–P

DEPARTMENT OF HEALTH AND HUMAN SERVICES

Centers For Medicare & Medicaid Services

[CMS–4055–N]

Medicare Program: National Medicare+Choice Risk Adjustment Public Meeting—February 3, 2003

AGENCY: Centers for Medicare & Medicaid Services (CMS), Health and Human Services.

ACTION: Notice of meeting.

SUMMARY: This notice announces a national Medicare+Choice risk adjustment public meeting for Medicare+Choice organizations, Medicare capitated demonstration projects, PACE plans, Evercare plans, Social Health Maintenance Organizations, Wisconsin Partnership program, Minnesota Senior Health Options, providers, practitioners, and other interested parties. The public meeting will provide updated information on the final CMS-HCC (Hierarchical Condition Category) risk adjustment model and risk adjustment data processing. This public meeting builds on information provided at the January 16, 2002 public meeting held at CMS, the draft model released on March 29, 2002, and the regional training sessions held in June 2002.

DATES: The public meeting is scheduled for February 3, 2003 from 9 a.m. until 5 p.m., e.s.t.

ADDRESSES: The public meeting will be held in the CMS Auditorium, 7500 Security Boulevard, Baltimore, Maryland, 21244–1850.

FOR FURTHER INFORMATION CONTACT: Bobbie Knickman at (410) 786–4161 or *bknickman@cms.hhs.gov.* To submit public comments no later than February 18, 2003, 5 p.m., e.s.t., e-mail Angela Porter at *aporter@cms.hhs.gov* or fax to (410) 786–1048.

SUPPLEMENTARY INFORMATION:

Background

The Balanced Budget Act of 1997 (BBA) (Pub. L. 105–33) expanded the Medicare+Choice (M+C) program for

Medicare beneficiaries. Under the BBA, the Secretary of Health and Human Services (the Secretary) was required to implement a risk adjustment methodology that adjusts M+C payments to account for variations in per capita costs based on health status and other demographic factors. The BBA also gave the Secretary the authority to collect inpatient hospital data for discharges on or after July 1, 1997, and additional data for other services occurring on or after July 1, 1998. The Secretary developed an initial risk adjustment methodology that incorporated only inpatient hospital data. As required by the BBA, this methodology was implemented beginning on January 1, 2000. Currently, only 10 percent of the M+C payment rate is risk adjusted under the existing risk adjustment methodology, with the other 90 percent subject only to demographic adjustments. The Medicare, Medicaid, and SCHIP Benefits Improvement and Protection Act of 2000 (BIPA), enacted in December 2000, stipulates that the risk adjustment methodology for 2004 and succeeding years should be based on data from inpatient hospital and ambulatory settings. The BIPA also contains a provision that phases in future risk adjusted payments as follows: 30 percent in 2004; 50 percent in 2005; 75 percent in 2006; and 100 percent in 2007.

The collection of physician encounter data, which began on October 1, 2000, and hospital outpatient encounter data, which began on April 1, 2001, was suspended from May 25, 2001 through July 1, 2002. The Secretary suspended the submission of physician and hospital outpatient encounter data in May 2001 and directed us to develop a risk adjustment approach that balanced payment accuracy with data burden. We worked with M+C organizations, their associations, and other interested parties to develop a risk adjustment approach that significantly reduced the burden of data collection for M+C organizations compared to the approach that was suspended in May of 2001. The result of this effort was to reduce burden by approximately 98 percent. The reduction in burden was accomplished by decreasing the number of data elements submitted (from 50 to 5 elements), only requiring submission of diagnoses that are needed for calculating payments, and creating a simplified data submission format and processing system. The draft CMS–HCC risk adjustment payment model was released on March 29, 2002. The CMS–HCC risk adjustment payment model is a 61 disease group selected significant disease model. Also released on March 29, 2002, was a file of ICD–9–CM codes required to group diagnosis codes for risk adjustment. On April 15, 2002, a reduced set of ICD–9–CM codes were released to further simplify the collection of diagnoses. The Risk Adjustment Processing System (RAPS) became operational on October 1, 2002. Submission of ambulatory risk adjustment data (physician and hospital outpatient) resumed on October 1, 2002 for dates of service beginning July 1, 2002. On March 28, 2003 we will announce the proposed final version of the CMS–HCC risk adjustment payment model that affects risk adjustment payment beginning January 2004 and incorporates hospital inpatient, hospital outpatient and physician data.

This public meeting will cover proposed changes to the draft version of the CMS–HCC risk adjustment model released on March 29, 2002. These changes include proposed adjustments to account for higher costs for community-based enrollees, as well as proposed implementation approaches for 2004. The meeting will focus on the risk adjustment model and data collection and include the following topics:

- Proposed final version of the CMS-HCC risk adjustment payment model.
- Frailty adjuster (soliciting public comment).
- Elimination of the lag between the data collection period and payment (soliciting public comment).
- Risk adjustment data processing.
- Risk adjustment schedule.

A copy of the public meeting agenda is available at: http://*www.aspenxnet.com/meetingagenda.htm.*

The agenda will include presentations by CMS staff, Aspen training staff, as well as question and answer sessions. Written public comments are preferred following the meeting and will be accepted until February 18, 2003, 5 p.m., e.s.t.

Registration

Registration for this public meeting is required and will be on a first-come, first-serve basis, limited to three attendees per organization.

This public meeting is intended for Medicare+Choice organizations, Medicare capitated demonstration projects, PACE plans, Evercare plans, Social Health Maintenance Organizations, Wisconsin Partnership program, Minnesota Senior Health Options, providers, practitioners, and other interested parties. A waiting list will be available for additional requests. The registration deadline is January 29, 2003 at 5 p.m., e.s.t. Registration must be completed via the Internet at the following Web site: http://*www.aspenxnet.com/registration.* A confirmation notice with specific meeting location information will be sent to attendees upon finalization of registration.

Persons who are not registered in advance will not be permitted into the Federal Building and thus not be able to attend the public meeting. Persons attending the public meeting will be required to show photographic identification, preferably a valid driver's license, before entering the building. Please note that if the public meeting is cancelled, then a notice will be posted on our Web site (http://*www.cms.hhs.gov).*

Attendees will be provided with meeting materials at the time of the meeting. Meeting materials will be available at http://*www.mcoservice.com* after February 3, 2003.

Written questions about meeting logistics or requests for meeting materials after February 3, 2003 must be directed to: Kim Slaughter, Aspen Systems Corporation, Telephone Number: (301) 519–5388, Fax Number: (301) 519–6360, e-mail: *encounterdata@aspensys.com.*

Written public comments will be accepted until February 18, 2003, 5 p.m., e.s.t. Written public comments should be sent to Angela Porter at *aporter@cms.hhs.gov* or fax to (410) 786–1048.

(Authority: Sections 1851 through 1859 of the Social Security Act (42 U.S.C. 1395w–21 through 1395w–28)) (Catalog of Federal Domestic Assistance Program No. 93.773 Medicare—Hospital Insurance Program; and No. 93.774, Medicare— Supplementary Medical Insurance Program**)**

Dated: December 4, 2002.

Thomas A. Scully,

Administrator, Centers for Medicare & Medicaid Services.

[FR Doc. 02–31410 Filed 12–26–02; 8:45 am]

BILLING CODE 4120–01–P

DEPARTMENT OF HEALTH AND HUMAN SERVICES

Centers for Medicare & Medicaid Services

[CMS–1202–CN]

Medicare Program; Prospective Payment System and Consolidated Billing for Skilled Nursing Facilities—Correction Notice

AGENCY: Centers for Medicare & Medicaid Services (CMS), HHS.

ACTION: Correction notice.

SUMMARY: This correction notice corrects technical errors that appeared in the notice published in the **Federal Register** on July 31, 2002 entitled ''Medicare Program; Prospective Payment System and Consolidated Billing for Skilled Nursing Facilities—Update.''

EFFECTIVE DATE: This correction is effective October 1, 2002.

FOR FURTHER INFORMATION CONTACT: Bill Ullman, (410) 786–5667.

SUPPLEMENTARY INFORMATION: In the July 31, 2002 notice entitled ''Prospective Payment System and Consolidated Billing for Skilled Nursing Facilities—Update'' (67 FR 49798), there were two technical errors in the preamble involving the Skilled Nursing Facilities Prospective Payment System (SNF PPS) wage index values. In addition, the list of urban areas in one of the wage index tables inadvertently omitted the name of a constituent county for a particular urban area. Finally, the preamble explanation of another table, Table 12, inadvertently cited the wrong figure from that table. Accordingly, we are correcting the SNF PPS wage index values and the list of urban areas, as published in Table 7, and are also correcting the total change figure provided in the explanation of Table 12.

Specifically, in the discussion of Table 12 (''Projected Impact of FY 2003 Update to the SNF PPS'') that appeared on page 49817, the explanation of column 5 of that table erroneously cited the figure at the bottom of the column (−9.1 percent) as the projected total change in aggregate payments for FY 2003. In fact, the figure at the bottom of column 5 represents the projected change in payments only for voluntary facilities, while the figure representing the total projected change for all facilities (−8.8 percent) actually appears at the top of column 5.

In addition, in Table 7, the wage index value for the Kankakee, IL Metropolitan Statistical Area (MSA) (area 3740) is corrected from 0.8122 to 1.0790, and the wage index value for the Killeen-Temple, TX MSA (area 3810) is corrected from 0.9570 to 1.0399. In addition, the county of Bell, TX is added to the list of constituent counties for the Killeen-Temple, TX MSA (area 3810). Finally, in the discussion of Table 12, the figure representing the projected decrease in aggregate payments is corrected from 9.1 percent to 8.8 percent. These corrections are effective October 1, 2002.

In accordance with our longstanding policies, these technical and tabulation errors are being corrected prospectively, effective October 1, 2002. This correction notice conforms the published SNF PPS wage index values to the prospectively revised values. As such, this correction does not represent any changes to the policies set forth in the notice.

The corrections appear in this document under the heading ''Correction of Errors.'' The provisions in this correction notice are effective as if they had been included in the document published in the **Federal Register** on July 31, 2002.

Waiver of Proposed Rulemaking

We ordinarily publish a notice of proposed rulemaking in the **Federal Register** to provide a period for public comment before provisions of a notice such as this take effect. We can waive this procedure, however, if we find good cause that a notice and comment procedure is impracticable, unnecessary, or contrary to the public interest and incorporate a statement of the finding and its reasons in the notice issued.

We find it unnecessary to undertake notice and comment rulemaking because this notice merely provides technical corrections to the regulations and does not make any substantive changes to the regulations. Therefore, for good cause, we waive notice and comment procedures.

Correction of Errors

In FR Doc. 02–19373 of July 31, 2002 (67 FR 49798), we are making the following corrections:

Corrections to Preamble

1. On page 49809, in column 3 of Table 7, ''Wage Index for Urban Areas,'' the entry of ''0.8122'' for the Kankakee, IL MSA (area 3740) is revised to read ''1.0790'' (effective October 1, 2002).

2. On page 49809, in column 3 of Table 7, ''Wage Index for Urban Areas'', the entry of ''0.9570'' for the Killeen-Temple, TX MSA (area 3810) is revised to read ''1.0399'' (effective October 1, 2002).

3. On page 49809, in column 3 of Table 7, ''Bell, TX'' is added to the list of constituent counties for the Killeen-Temple, TX MSA (area 3810) (effective October 1, 2002).

4. On page 49817, in column 3, in the fifth paragraph, the phrase ''9.1 percent'' is revised to read ''8.8 percent.''

Authority: Section 1888 of the Social Security Act (42 U.S.C. 1395yy))

(Catalog of Federal Domestic Assistance Program No. 93–773, Medicare— Hospital Insurance; and Program No. 93.774, Medicare—Supplementary Medical Insurance Program)

Dated: December 7, 2002.

Ann Agnew,

Executive Secretary to the Department.

[FR Doc. 02–31408 Filed 12–26–02; 8:45 am]

BILLING CODE 4120–01–P

DEPARTMENT OF HEALTH AND HUMAN SERVICES

Centers for Medicare & Medicaid Services

[CMS–3105–N]

Medicare Program; Meeting of the Medicare Coverage Advisory Committee—February 12, 2003

AGENCY: Centers for Medicare & Medicaid Services (CMS), HHS.

ACTION: Notice.

SUMMARY: This notice announces a public meeting of the Medicare Coverage Advisory Committee (the Committee). The Committee provides advice and recommendations to us about clinical issues. Among other things, the Committee advises us on whether adequate evidence exists to determine whether specific medical items and services are reasonable and necessary under Medicare law. The Committee will discuss and make recommendations concerning the quality of the evidence and related issues for the use of implantable cardioverter defibrillators (ICDs). We received a request from Guidant Corporation to cover ICDs for patients with a prior myocardial infarction and a left ventricular ejection fraction of ≤.30. We are taking the opportunity to review all indications for ICDs. Notice of this action is given under the Federal Advisory Committee Act (5 U.S.C. App. 2, section 10(a)(1) and (a)(2)).

DATES: *The Meeting:* The public meeting announced will be held on Wednesday, February 12, 2003 from 7:30 a.m. until 3:30 p.m., E.S.T.

Deadline for Presentations and Comments: Interested persons may present data, information, or views orally or in writing, on issues pending before the committee. Written presentations and comments must be submitted to the Executive Secretary by January 29, 2003, 5 p.m., E.S.T.

Special Accommodations: Persons attending the meeting who are hearing or visually impaired, or have a condition that requires special assistance or accommodations, are asked to notify the Executive Secretary by January 29, 2003 (see **FOR FURTHER INFORMATION CONTACT**).

ADDRESSES: *The Meeting:* The meeting will be held at the Baltimore Convention Center, Room 338–339, One West Pratt Street, Baltimore, MD 21201.

Presentations and Comments: Submit formal presentations and written comments to Janet Anderson 410–786–2700, janderson@cms.hhs.gov, Executive Secretary; Office of Clinical Standards and Quality; Centers for Medicare & Medicaid Services; 7500 Security Boulevard; Mail Stop C1–09–06; Baltimore, MD 21244.

Website: You may access up-to-date information on this meeting at www.cms.gov/coverage.

Hotline: You may access up-to-date information on this meeting on the CMS Advisory Committee Information Hotline, 1–877–449–5659 (toll free) or in the Baltimore area (410) 786–9379.

FOR FURTHER INFORMATION CONTACT: Janet Anderson, Executive Secretary, 410–786–2700, *janderson@cms.hhs.gov.*

SUPPLEMENTARY INFORMATION: On December 14, 1998, we published a notice in the **Federal Register** (63 FR 68780) to describe the Medicare Coverage Advisory Committee (the Committee), which provides advice and recommendations to us about clinical issues. A revised charter was signed by the Secretary on November 22, 2002. This notice announces the following public meeting of the Committee.

Meeting Topic

The Committee will discuss the evidence, hear presentations and public comment, and make recommendations regarding the use of implantable cardioverter defibrillators. Background information about this topic, including committee materials, is available on the Internet at *http://www.cms.gov/coverage.*

Procedure and Agenda

This meeting is open to the public. The Committee will hear oral presentations from the public for approximately 45 minutes. The Committee may limit the number and duration of oral presentations to the time available. If you wish to make formal presentations, you must notify the Executive Secretary named in the **FOR FURTHER INFORMATION CONTACT** section, and submit the following by the *Deadline for Presentations and Comments* date listed in the **DATES** section of this notice: a brief statement of the general nature of the evidence or arguments you wish to present, and the names and addresses of proposed participants. A written copy of your presentation must be provided to each Committee member before offering your public comments. We will request that you declare at the meeting whether or not you have any financial involvement with manufacturers of any items or services being discussed (or with their competitors).

After the public and CMS presentations, the Committee will deliberate openly on the topic. Interested persons may observe the deliberations, but the Committee will not hear further comments during this time except at the request of the chairperson. The Committee will also allow a 15-minute unscheduled open public session for any attendee to address issues specific to the topic. At the conclusion of the day, the members will vote and the Committee will make its recommendation.

Authority: 5 U.S.C. App. 2, section 10(a)(1) and (a)(2).

(Catalog of Federal Domestic Assistance Program No. 93.774, Medicare—Supplementary Medical Insurance Program)

Dated: December 17, 2002.

Robert A. Streimer,

Acting Director, Office of Clinical Standards and , Quality, Centers for Medicare & Medicaid Services.

[FR Doc. 02–32652 Filed 12–26–02; 8:45 am]

BILLING CODE 4120–01–P

DEPARTMENT OF HEALTH AND HUMAN SERVICES

Centers for Medicare & Medicaid Services

[CMS–1234–N]

Medicare Program; February 10, 2003, Meeting of the Practicing Physicians Advisory Council

AGENCY: Centers for Medicare & Medicaid Services (CMS), HHS.

ACTION: Notice.

SUMMARY: In accordance with section 10(a) of the Federal Advisory Committee Act, this notice announces a meeting of the Practicing Physicians Advisory Council. The Council will be meeting to discuss certain proposed changes in regulations and carrier manual instructions related to physicians' services, as identified by the Secretary of the Department of Health and Human Services. These meetings are open to the public.

Meeting Registration: Persons wishing to attend this meeting must contact the Practicing Physician Advisory Council Administrative Officer Diana Motsiopoulos at *dmotsiopoulos@cms.hhs.gov* or (410) 786–3379 at least 72 hours in advance to register. Persons who are not registered in advance will not be permitted into the Humphrey Building and thus will not be able to attend the meeting. Persons attending the meeting will be required to show a photographic identification, preferably a valid driver's license, before entering the building.

DATES: The meeting is scheduled for Monday, February 10, 2003 from 8:30 a.m. until 5 p.m., e.s.t.

ADDRESSES: The meeting will be held at CMS Headquarters Multipurpose Room, 7500 Security Blvd., Baltimore, MD 21244–1850.

Web site: You may access the Internet at *http://cms.hhs.gov/faca/ppac/default.asp* for additional information and updates on committee activities.

CMS Advisory Committees Information Line: (1–877–449–5659 toll free)/(410–786–9379 local).

FOR FURTHER INFORMATION CONTACT: Paul Rudolf, M.D., J.D., Executive Director, Practicing Physicians Advisory Council, 7500 Security Boulevard., Mail Stop C4–10–07, Baltimore, MD 21244–1850, (410) 786–3379. News media representatives should contact the CMS Press Office, (202) 690–6145.

SUPPLEMENTARY INFORMATION: The Secretary of the Department of Health and Human Services (the Secretary) is mandated by section 1868 of the Social Security Act (the Act) to appoint a Practicing Physicians Advisory Council (the Council) based on nominations submitted by medical organizations representing physicians. The Council meets quarterly to discuss certain proposed changes in regulations and carrier manual instructions related to physicians' services, as identified by the Secretary. To the extent feasible and consistent with statutory deadlines, the consultation must occur before publication of the proposed changes. The Council submits an annual report on its recommendations to the Secretary and the Administrator of the Centers for Medicare & Medicaid Services not later than December 31 of each year.

The Council consists of 15 physicians, each of whom has submitted at least 250 claims for physicians' services under Medicare in the previous year. Members of the Council include both participating and nonparticipating physicians, and physicians practicing in rural and underserved urban areas. At least 11 of the members of the Council shall be physicians described in section 1861(r)(1) of the Act. The remaining members may include dentists, podiatrists, optometrists, and chiropractors. Members serve for overlapping 4-year terms; terms of more than 2 years are contingent upon the renewal of the Council by appropriate

action before its termination. Section 1868(a) of the Act provides that nominations to the Secretary for Council membership must be made by medical organizations representing physicians.

The Council held its first meeting on May 11, 1992. The current members are: James Bergeron, M.D.; Richard Bronfman, D.P.M.; Ronald Castellanos, M.D., Rebecca Gaughan, M.D.; Joseph Heyman, M.D.; Stephen A. Imbeau, M.D.; Joe Johnson, D.O.; Christopher Leggett, M.D.; Dale Lervick, O.D.; Angelyn L. Moultrie-Lizana, D.O.; Barbara McAneny, M.D.; Michael T. Rapp, M.D. (Chairman); Amilu Rothhammer, M.D.; Victor Vela, M.D.; and Douglas L. Wood, M.D.

Council members will be updated on the status of recommendations. The agenda will provide for discussion and comment on the following topics:

- 2004 Physician Fee Schedule.
- Physicians Regulatory Issues Team Update.

For additional information and clarification on the topics listed, call the contact person in the **FOR FURTHER INFORMATION CONTACT** section of this notice. Individual physicians or medical organizations that represent physicians wishing to make 5-minute oral presentations on agenda issues should contact the Executive Director by 12 noon, Monday, January 27, 2003, to be scheduled. Testimony is limited to agenda topics. The number of oral presentations may be limited by the time available. A written copy of the presenter's oral remarks should be submitted to the meeting coordinator at *dmotsiopoulos@cms.hhs.gov* no later than 12 noon, Friday, January 31, 2003, for distribution to Council members for review before the meeting. Physicians and organizations not scheduled to speak may also submit written comments to the Executive Director and Council members. The meeting is open to the public, but attendance is limited to the space available. Individuals requiring sign language interpretation for the hearing impaired or other special accommodation should contact Diana Motsiopoulos at *dmotsiopoulos@cms.hhs.gov* or (410) 786–3379 at least 10 days before the meeting.

(Section 1868 of the Social Security Act (42 U.S.C. 1395ee) and section 10(a) of Public Law 92–463 (5 U.S.C. App. 2, section 10(a)).

(Catalog of Federal Domestic Assistance Program No. 93.773, Medicare—Hospital Insurance; and Program No. 93.774, Medicare—Supplementary Medical Insurance Program)

Dated: December 7, 2002.

Thomas A. Scully,

Administrator, Centers for Medicare & Medicaid Services.

[FR Doc. 02–32198 Filed 12–26–02; 8:45 am]

BILLING CODE 4120–01–P

DEPARTMENT OF HEALTH AND HUMAN SERVICES

Food and Drug Administration

[Docket No. 02N–0514]

Agency Information Collection Activities; Proposed Collection; Comment Request; Irradiation in the Production, Processing, and Handling of Food

AGENCY: Food and Drug Administration, HHS.

ACTION: Notice.

SUMMARY: The Food and Drug Administration (FDA) is announcing an opportunity for public comment on the proposed collection of certain information by the agency. Under the Paperwork Reduction Act of 1995 (the PRA), Federal agencies are required to publish notice in the **Federal Register** concerning each proposed collection of information, including an extension of an existing collection of information, and to allow 60 days for public comment in response to the notice. This notice solicits comments on the reporting and recordkeeping requirements for food irradiation processors.

DATES: Submit written or electronic comments on the collection of information by February 25, 2003.

ADDRESSES: Submit electronic comments on the collection of information to *http://www.accessdata.fda.gov/scripts/oc/dockets/edockethome.cfm.* Submit written comments on the collection of information to the Dockets Management Branch (HFA–305), Food and Drug Administration, 5630 Fishers Lane., rm. 1061, Rockville, MD 20852. All comments should be identified with the docket number found in brackets in the heading of this document.

FOR FURTHER INFORMATION CONTACT: Peggy Robbins, Office of Information Resources Management (HFA–250), Food and Drug Administration, 5600 Fishers Lane, rm. 16B–26, Rockville, MD 20857, 301–827–1223.

SUPPLEMENTARY INFORMATION: Under the PRA (44 U.S.C. 3501–3520), Federal agencies must obtain approval from the Office of Management and Budget (OMB) for each collection of information they conduct or sponsor. ''Collection of information'' is defined in 44 U.S.C. 3502(3) and 5 CFR 1320.3(c) and includes agency requests or requirements that members of the public submit reports, keep records, or provide information to a third party. Section 3506(c)(2)(A) of the PRA (44 U.S.C. 3506(c)(2)(A)) requires Federal agencies to provide a 60-day notice in the **Federal Register** concerning each proposed collection of information including each proposed extension of an existing collection of information before submitting the collection to OMB for approval. To comply with this requirement, FDA is publishing notice of the proposed collection of information set forth in this document.

With respect to the following collection of information, FDA invites comments on: (1) Whether the proposed collection of information is necessary for the proper performance of FDA's functions, including whether the information will have practical utility; (2) the accuracy of FDA's estimate of the burden of the proposed collection of information, including the validity of the methodology and assumptions used; (3) ways to enhance the quality, utility, and clarity of the information to be collected; and (4) ways to minimize the burden of the collection of information on respondents, including through the use of automated collection techniques, when appropriate, and other forms of information technology.

Irradiation in the Production, Processing, and Handling of Food—21 CFR Part 179 (OMB Control Number 0910–0186)—Extension

Under section 201(s) and 409 of the Federal Food, Drug, and Cosmetic Act (the act) (21 U.S.C. 321(s) and 348), food irradiation is subject to regulation under the food additive premarket approval provisions of the act. The regulations providing for uses of irradiation in the production, processing, and handling of food are found in part 179 (21 CFR part 179). To assure safe use of a radiation source, § 179.21(b)(1) requires that the label of sources bear appropriate and accurate information identifying the source of radiation and the maximum energy of radiation emitted by x-ray tube sources. Section 179.21(b)(2)(i) requires that the label or accompanying labeling bear adequate directions for installation and use. Section 179.25(e) requires that food processors who treat food with radiation make and retain, for 1 year past the expected shelf life of the products up to a maximum of 3 years, specified records relating to the irradiation process (e.g., the food treated, lot identification, scheduled

process, etc.). The records required by § 179.25(e) are used by FDA inspectors to assess compliance with the regulation that establishes limits within which radiation may be safely used to treat food. The agency cannot ensure safe use without a method to assess compliance with the dose limits, and there are no practicable methods for analyzing most foods to determine whether they have been treated with ionizing radiation and are within the limitations set forth in part 179. Records inspection is the only way to determine whether firms are complying with the regulations for treatment of foods with ionizing radiation

FDA estimates the burden of this collection of information as follows:

TABLE 1.—ESTIMATED ANNUAL RECORDKEEPING BURDEN[1]

21 CFR Section	No. of Recordkeepers	Annual Frequency of Recordkeeping	Total Annual Records	Hours per Recordkeeper	Total Hours
179.25(e)	6	120	720	1	720

[1] There are no capital costs or operating and maintenance costs associated with this collection of information.

The number of firms who process food using irradiation is extremely limited. FDA estimates that there are two irradiation plants whose business is devoted primarily (i.e., approximately 100 percent) to irradiation of food and other agricultural products. Four other firms also irradiate small quantities of food. FDA estimates that this irradiation accounts for no more than 10 percent of the business for each of these firms. Therefore, the average estimated burden is based on: Two facilities devoting 100 percent of their business (or 600 hours for recordkeeping annually) to food irradiation; four facilities devoting 10 percent of their business or 120 hours (4 x 30 hours) for recordkeeping annually to food irradiation.

No burden has been estimated for the labeling requirements in §§ 179.21(b)(2)(i) and (b)(2)(ii) and 179.26(c) because the information to be disclosed is information that has been supplied by FDA. Under 5 CFR 1320.3(c)(2), the public disclosure of information originally supplied by the Federal Government to the recipient for the purpose of disclosure to the public is not a collection of information.

Dated: December 19, 2002.

Margaret M. Dotzel,

Assistant Commissioner for Policy.

[FR Doc. 02–32662 Filed 12–26–02; 8:45 am]

BILLING CODE 4160–01–S

DEPARTMENT OF HEALTH AND HUMAN SERVICES

Food and Drug Administration

[Docket No. 02N–0516]

Agency Information Collection Activities; Proposed Collection; Comment Request; Request for Samples and Protocols

AGENCY: Food and Drug Administration, HHS.

ACTION: Notice.

SUMMARY: The Food and Drug Administration (FDA) is announcing an opportunity for public comment on the proposed collection of certain information by the agency. Under the Paperwork Reduction Act of 1995 (the PRA), Federal agencies are required to publish notice in the **Federal Register** concerning each proposed collection of information, including each proposed extension of an existing collection of information, and to allow 60 days for public comment in response to the notice. This notice solicits comments on the information collection provisions relating to the regulations which state that protocols for samples of biological products must be submitted to the agency.

DATES: Submit written or electronic comments on the collection of information by February 25, 2003.

ADDRESSES: Submit electronic comments on the collection of information to http://www.accessdata.fda.gov/scripts/oc/dockets/edockethome.cfm. Submit written comments on the collection of information to the Dockets Management Branch (HFA–305), Food and Drug Administration, 5630 Fishers Lane, rm. 1061, Rockville, MD 20852. All comments should be identified with the docket number found in brackets in the heading of this document.

FOR FURTHER INFORMATION CONTACT: JonnaLynn P. Capezzuto, Office of Information Resources Management (HFA–250), Food and Drug Administration, 5600 Fishers Lane, rm. 16B–26, Rockville, MD 20857, 301–827–4659.

SUPPLEMENTARY INFORMATION: Under the PRA (44 U.S.C. 3501–3520), Federal agencies must obtain approval from the Office of Management and Budget (OMB) for each collection of information they conduct or sponsor. ''Collection of information'' is defined in 44 U.S.C. 3502(3) and 5 CFR 1320.3(c) and includes agency requests or requirements that members of the public submit reports, keep records, or provide information to a third party. Section 3506(c)(2)(A) of the PRA (44 U.S.C. 3506(c)(2)(A)) requires Federal agencies to provide a 60-day notice in the **Federal Register** concerning each proposed collection of information, including each proposed extension of an existing collection of information, before submitting the collection to OMB for approval. To comply with this requirement, FDA is publishing notice of the proposed collection of information listed below.

With respect to the following collection of information, FDA invites comments on: (1) Whether the proposed collection of information is necessary for the proper performance of FDA's functions, including whether the information will have practical utility; (2) the accuracy of FDA's estimate of the burden of the proposed collection of information, including the validity of the methodology and assumptions used; (3) ways to enhance the quality, utility, and clarity of the information to be collected; and (4) ways to minimize the burden of the collection of information on respondents, including through the use of automated collection techniques when appropriate, and other forms of information technology.

Request for Samples and Protocols (OMB Control Number 0910–0206)—Extension

Under section 351 of the Public Health Service Act (the PHS Act) (42 U.S.C. 262), FDA has the responsibility to issue regulations that prescribe standards designed to ensure the safety, purity, and potency of biological products and to ensure that licenses for such products are only issued when a product meets the prescribed standards. Under § 610.2 (21 CFR 610.2), FDA may at any time require manufacturers of licensed biological products to submit to FDA samples of any lot along with the protocols showing the results of

applicable tests before marketing the lot of the product. In addition to § 610.2, there are other regulations that require the submission of samples and protocols for specific licensed biological products: § 660.6 (21 CFR 660.6) (Antibody to Hepatitis B Surface Antigen), § 660.36 (21 CFR 660.36) (Reagent Red Blood Cells), and § 660.46 (21 CFR 660.46) (Hepatitis B Surface Antigen).

Section 660.6(a) provides requirements for the frequency of submission of samples from each lot of Antibody to Hepatitis B Surface Antigen product, and § 660.6(b) provides the requirements for the submission of a protocol containing specific information along with each required sample. For § 660.6 products subject to official release by FDA, one sample from each filling of each lot is required to be submitted along with a protocol consisting of a summary of the history or manufacture of the product, including all results of each test for which test results are requested by the Center for Biologics Evaluation and Research (CBER). After official release is no longer required, one sample along with a protocol is required to be submitted at an interval of 90 days. In addition, samples, which must be accompanied by a protocol, may at any time be required to be submitted to FDA if continued evaluation is deemed necessary.

Section 660.36(a) requires, after each routine establishment inspection by FDA, the submission of samples from a lot of final Reagent Red Blood Cell product along with a protocol containing specific information. Section 660.36(a)(2) requires a protocol contain information including, but not limited to, manufacturing records, test records, and test results. Section 660.36(b) requires a copy of the antigenic constitution matrix specifying the antigens present or absent to be submitted to FDA at the time of initial distribution of each lot.

Section 660.46(a) provides requirements for the frequency of submission of samples from each lot of Hepatitis B Surface Antigen product, and § 660.46(b) provides the requirements for the submission of a protocol containing specific information along with each required sample. For § 660.46 products subject to official release by FDA, one sample from each filling of each lot is required to be submitted along with a protocol consisting of a summary of the history or manufacture of the product, including all results of each test for which test results are requested by CBER. After notification of official release is received, one sample along with a protocol is required to be submitted at an interval of 90 days. In addition, samples, which must be accompanied by a protocol, may at any time be required to be submitted to FDA if continued evaluation is deemed necessary.

Samples and protocols are required by FDA to help ensure the safety, purity, or potency of the product because of the potential lot-to-lot variability of a product produced from living organisms. In cases of certain biological products (e.g., Albumin, Plasma Protein Fraction, and specified biotechnology and specified synthetic biological products) that are known to have lot-to-lot consistency, official lot release is not normally required. However, submissions of samples and protocols of these products may still be required for surveillance, licensing, and export purposes, or in the event that FDA obtains information that the manufacturing process may not result in consistent quality of the product.

The following burden estimate is for protocols required to be submitted with each sample. The collection of samples is not a collection of information under 5 CFR 1320.3(h)(2). Respondents to the collection of information under § 610.2 are manufacturers of any licensed biological product. Respondents to the collection of information under §§ 660.6(b), 660.36(a)(2) and (b), and 660.46(b) are manufacturers of the specific products referenced above. The estimated number of respondents for each regulation is based on the annual number of manufacturers that submitted samples and protocols for biological products including submissions for lot release, surveillance, licensing, or export. There are an estimated 329 manufacturers of licensed biological products, however, based on information obtained from FDA's database system, approximately 83 manufacturers submitted samples and protocols in fiscal year 1999 and 2000, under the regulations cited previously. FDA estimates that approximately 76 manufacturers submitted protocols under § 610.2 and 7 manufacturers submitted protocols under the regulations for the specific products.

The total annual responses are based on the annual average of FDA's final actions completed in fiscal year 1999 and 2000, which totaled 6,747, for the various submission requirements of samples and protocols for biological products. The rate of final actions is not expected to change significantly in the next few years. The hours per response are based on information provided by industry. The burden estimates provided by industry ranged from 1 to 5.5 hours. Under § 610.2, the hours per response are based on the average of these estimates and rounded to 3 hours. Under the remaining regulations, the hours per response are based on the higher end of the estimate (rounded to 5 or 6 hours) because more information is generally required to be submitted in the protocol than under § 610.2. FDA estimates the burden of this information collection as follows:

TABLE 1.—ESTIMATED ANNUAL REPORTING BURDEN[1]

21 CFR Section	No. of Respondents	Annual Frequency per Response	Total Annual Response	Hours per Response	Total Hours
610.2	76	86.5	6,574	3	19,722
660.6(b)	4	28.5	114	5	570
660.36(a)(2) and (b)	1	1	1	6	6
660.46(b)	2	29	58	5	290
Total	83		6,747		20,588

[1] There are no capital costs or operating and maintenance costs associated with this collection.

Dated: December 19, 2002.

Margaret M. Dotzel,

Assistant Commissioner for Policy.

[FR Doc. 02–32749 Filed 12–26–02; 8:45 am]

BILLING CODE 4160–01–S

DEPARTMENT OF HOUSING AND URBAN DEVELOPMENT

[Docket No. FR–4730–N–52]

Federal Property Suitable as Facilities To Assist the Homeless

AGENCY: Office of the Assistant Secretary for Community Planning and Development, HUD.

ACTION: Notice.

SUMMARY: This Notice identifies unutilized, underutilized, excess, and surplus Federal property reviewed by HUD for suitability for possible use to assist the homeless.

EFFECTIVE DATE: December 27, 2002.

FOR FURTHER INFORMATION CONTACT: Mark Johnston, Department of Housing and Urban Development, Room 7262, 451 Seventh Street SW., Washington, DC 20410; telephone (202) 708–1234; TTY number for the hearing- and speech-impaired (202) 708–2565, (these telephone numbers are not toll-free), or call the toll-free Title V information line at 1–800–927–7588.

SUPPLEMENTARY INFORMATION: In accordance with the December 12, 1988 court order in *National Coalition for the Homeless* v. *Veterans Administration,* No. 88–2503–OG (D.D.C.), HUD publishes a Notice, on a weekly basis, identifying unutilized, underutilized, excess and surplus Federal buildings and real property that HUD has reviewed for suitability for use to assist the homeless. Today's Notice is for the purpose of announcing that no additional properties have been determined suitable or unsuitable this week.

Dated: December 19, 2002.

John D. Garrity,

Director, Office of Special Needs, Assistance Programs.

[FR Doc. 02–32438 Filed 12–26–02; 8:45 am]

BILLING CODE 4210–29–M

DEPARTMENT OF THE INTERIOR

Office of the Secretary

Consultation Meetings on the Department of the Interior's Financial Assistance Programs

AGENCY: Office of the Secretary, Interior.

ACTION: Notice of public regional consultation meetings on the Federal Financial Assistance Management Improvement Act of 1999 (Public Law 106–107).

SUMMARY: The Department of the Interior is conducting several regional consultation meetings to implement the Federal Financial Assistance Management Improvement Act of 1999. The meetings are designed to give interested members of the public a chance to comment on the Department's financial assistance programs and offer suggestions for changes. We encourage any interested individuals or organizations to participate by attending the consultations or by providing written comments. We are especially interested in comments by current financial assistance recipients and applicants.

DATES: See the **SUPPLEMENTARY INFORMATION** section for dates of meetings.

ADDRESSES: Meetings will be held in San Diego, California; Albuquerque, New Mexico; Honolulu, Hawaii; and Washington, DC. See the **SUPPLEMENTARY INFORMATION** section for the locations of the meetings.

FOR FURTHER INFORMATION CONTACT: Tammy Pataluna, telephone: 202–208–4080, e-mail: *tammy_pataluna@ios.doi.gov*, mailing address: 1849 C Street, NW., Mail Stop 5512, Washington, DC 20240, website: *http://www.doi.gov/pam/Grantcomment.html*.

SUPPLEMENTARY INFORMATION: The Department is conducting regional consultation meetings to discuss the Federal Financial Assistance Management Improvement Act of 1999 (Public Law 106–107) (the ''Act''). The Act requires federal agencies to improve the effectiveness and performance of federal financial assistance programs; simplify federal financial assistance application and reporting requirements; improve the delivery of services to the public; and facilitate greater coordination among those responsible for delivering such services. The Act requires agencies to receive comments from the public and to consult with representatives of non-Federal entities regarding the development of a plan to simplify their financial assistance programs. The Department has already participated in a government-wide consultation and is now seeking information specific to Interior's programs. At these meetings, the Department will explain its financial assistance programs and application requirements and solicit suggestions for improvements that it can make. If you or an organization that you represent has an interest in the Department's financial assistance programs, we encourage you to attend these meetings and participate in the consultation process.

The following bureaus and offices of the Department are sponsoring the consultation meetings: The Bureau of Indian Affairs, the Bureau of Land Management, Bureau of Reclamation, the Minerals Management Service, the National Business Center, the National Park Service, the Office of Acquisition and Property Management, the Office of the Assistant Secretary for Policy Management and Budget, the Office of Insular Affairs, the Office of Surface Mining, the U.S. Fish and Wildlife Service, and the U.S. Geological Survey. The meeting in Honolulu is specifically geared toward organizations and individuals interested in obtaining, and authorized to obtain, financial assistance from the Department's Office of Insular Affairs. The second consultation scheduled in Albuquerque, NM, (February 5, 2003, 1 p.m.) is specifically for organizations, individuals and Tribes interested in obtaining further information on the Bureau of Indian Affairs' grants and financial assistance process. The following table shows the dates and times of the regional meetings. For the convenience of those who require accommodations, we have reserved hotel rooms at a special reduced rate at each meeting location. To obtain the special rate, contact the hotel following the instructions given in the table. Be sure to mention that you want the special rate for Consultation Under Public Law 106–107. For further information, contact Tammy Pataluna at the number or address shown in the **FOR FURTHER INFORMATION CONTACT** section.

Date and times of meeting	Location of meeting	How to reserve hotel rooms
January 29, 2003, 9:30 a.m. to 5 p.m., January 30, 2003, 9:30 a.m. to noon.	Catamaran Resort, 3999 Mission Blvd., San Diego, California 92109.	Call the Catamaran Resort at 800–530–8725. To receive the special rate, you must make reservations by January 13, 2003.
February 4, 2003, 9:30 a.m. to 5 p.m., February 5, 2003, 9:30 a.m. to noon.	Doubletree Hotel, Albuquerque, New Mexico 87102.	Call the Doubletree Hotel at 888–223–4113. To receive the special rate, you must make reservations by January 13, 2003.
February 5, 2003, 1 p.m. to 5 p.m., February 6, 2003, 9:30 a.m. to 5 p.m.	Doubletree Hotel, Albuquerque, New Mexico 87102.	Call the Doubletree Hotel at 888–223–4113. To receive the special rate, you must make reservations by January 13, 2003.
February 19, 2003, 9:30 a.m. to 5 p.m., February 20, 2003, 9:30 a.m. to noon.	Hilton Hawaiian Village, 2005 Kalia Road, Honolulu, Hawaii 96815.	Call the Hilton Hawaiian Village at 808–949–4321. To receive the special rate, you must make reservations by February 3, 2003.
March 18, 2003, 9:30 a.m. to 5 p.m., March 19, 2003, 9:30 a.m. to noon.	South Interior Building, 1951 Constitution Avenue, NW., Washington, DC 20240.	Call the State Plaza Hotel, 2117 E Street, NW., at 800–424–2859. To receive the special rate, you must make reservations by February 21, 2003.

Dated: December 20, 2002.

Debra E. Sonderman,

Director, Office of Acquisition and Property Management.

[FR Doc. 02–32665 Filed 12–26–02; 8:45 am]

BILLING CODE 4310–RK–P

DEPARTMENT OF THE INTERIOR

Fish and Wildlife Service

Endangered and Threatened Species Permit Applications

AGENCY: Fish and Wildlife Service

ACTION: Notice of receipt of applications.

SUMMARY: The following applicants have applied for a scientific research permit to conduct certain activities with endangered species pursuant to section 10(a)(1)(A) of the Endangered Species Act of 1973, as amended (16 U.S.C. 1531. *et seq.*).

DATES: Written comments on these permit applications must be received within 30 days of the date of publication.

ADDRESSES: Written data or comments should be submitted to the Chief, Endangered Species Division, Ecological Services, P.O. Box 1306, Room 4102, Albuquerque, New Mexico 87103; (505) 248–6649; Fax (505) 248–6788. Documents will be available for public inspection by written request, by appointment only, during normal business hours (8 to 4:30) at the U.S. Fish and Wildlife Service, 500 Gold Ave. SW, Room 4102, Albuquerque, New Mexico. Please refer tot he respective permit number for each application when submitting comments. All comments received, including names and addresses, will become part of the official administrative record and may be made available to the public.

FOR FURTHER INFORMATION CONTACT: Chief, Endangered Species Division, Ecological Services, P.O. Box 1306, Room 4102, Albuquerque, New Mexico 87103. Documents and other information submitted with these applications are available for review, subject to the requirements of the Privacy Act and Freedom of Information Act, by any party who submits a written request to the address above for a copy of such documents within 30 days of the date of publication of this notice.

SUPPLEMENTARY INFORMATION:

Permit No. TE–835414

Applicant: Northern Arizona University-Department of Biological Sciences, Flagstaff, Arizona.

Applicant requests an amendment to an existing permit to allow collection of Colorado pikeminnow (*Ptychocheilus lucius*) and razorback sucker (*Xyrauchen texanus*) from the Dexter National Fish Hatchery and Technology Center, Dexter, New Mexico for use in research at the Rocky Mountain Ark Wildlife Rehabilitation Center, Telluride, Colorado.

Permit No. TE–026690

Applicant: Dynamac Corporation, Corrallis, Oregon.

Applicant request an amendment, to an existing permit to allow presence/absence surveys within Arizona for the following species: Gila topminnow (*Poeciliopsis occidentalis*), bonytail chub (*Gila elegans*), Virgin River chub (*Gila robusta semidnuda*), humpback chub (*Gila cypha*). Yaqui chumb (*Gila purpurea*). Colorado pikeminnow (*Ptychocheilus lucius*), desert pupfish (*Cytprinodon macularius*), razorback sucker (*Xyrauchen texanus*), Gila trout (*Oncorhynchus gilae*), and woundfin (*Plagopterus argentissimus*).

Permit No. TE–064085

Applicant: Iris Rodden, Tucso, Arizona.

Applicant requests a permit for research and recovery purposes to conduct presence/absence surveys for cactus ferruginous pygmy owl (*Glaucidium brasilianum cactorum*) and southwestern willow flycatcher (*Empidonax traillii extimus*) within Arizona.

Permit No. TE–006655

Applicant: Logan Simpson Design, Inc., Tempe, Arizona.

Applicant requests an amendment to an existing permit to allow presence/absence surveys for the following species within Arizona: Yuma Clapper rail (*Rallus longirostris yumanensis*), black-footed ferret (*Mustela nigripes*), and jaguar (*Panthera onca*).

Permit No. TE–062322

Applicant: Jerry Fant, Wimberly, Texas.

Applicant requests a permit for research and recovery purposes to conduct presence/absence surveys for the following species within Texas: Mexican long-nosed bat (*Leptonycteris nivalis*). Texas blind Salamander (*Typhlomolge rathbuni*), Peck's Cave amphipod (*Stygobromus pecki*), Tooth Cave pseudoscorpion (*Tartarocreagris texana*), Tooth Cave spider (*Neoleptoneta microps*), Madla's Cave meshweaver (*Cicurina madla*), Robber Baron Cave meshweaver (*Cicurina baronia*). Bracken Bat Cave Meshweaver (*Cicurina venii*). Government Canyon Cave meshweaver (*Cicurina vespera*). Bee Creek Cave harvestman (*Texella reddelli*), Bone Cave harvestman (*Texella reyesi*), Cokendolpher Cave harvestman (*Texella cokendolpheri*), Tooth Cave ground beetle (*Rhadine persephone*). Kretschmarr Cave mold beetle (*Texamaurops reddelli*), Coffin

Cave mold beetle (*Batrisodes texanus*), ground beetle (*Rhadine exilis*), ground beetle (*Rhadine infernalis*), and Helotes Mold beetle (*Batrisodes venyivi*).

Permit No. TE–061095

Applicant: Valley Natura Center, Weslaco, Texas.

Applicant requests a permit for research and recovery purposes to allow collection of dead specimens of the following species for educational display: jaguarundi (*Herpailurus yagouaroundi cacomitli*), ocelot (*Leopardus pardalis*), northern aplomado falcon (*Falco femoralis septentrionalis*), piping plover (*Charadrius melodus*), interior least tern (*Sterna antillarum*), green sea turtle (*Chelonia mydas*), hawsbill sea turtle (*Eretmochelys imbricata*), Kemp's ridley sea turtle (*Lepidochelys kempii*), leatherback sea turtle (*Dermochelys coriacea*), and loggerhead seat turtle (*Caretta caretta*)/. Applicant additionally request authorization to collect live specimens and propagate the following species: Texas ayeniz ((*Ayenia limitaris*), South Texas ambrosia (*Ambrosia cheiranthifolia*), star cactus (*Astrophytum asterias*), Waler's manioc (*Manihot walkerage*), ashy dogweed (*Thymophylla tephroleuca*) Johnston's frankenia (*Frankenia johnstonii*), and Zapata bladderpod (*Lesquerella thamnophila*). All plant and wildlife specimens will be collected from within Texas.

Permit No. TE–062323

Applicant: Robert Hershler, Washington, DC.

Applicant request a permit for research and recovery purposes to allow collection of Socorro springsnail (*Pyrgulopsis neomexicana*) form Socorro County, New Mexico.

Permit No. TE–064431

Applicant: AZTEC, Phoenix, Arizona.

Applicant requests a permit for research and recovery purposes to conduct presence/absence surveys for cactus ferrunginous pygmy owl (*Glaucidium brasilianum cactorum*) within Arizona, and for southwestern willow flycatcher (*Empidonax traillii extimus*) and Yuma clapper rail (*Rallus longirostris yumanensis*) within Arizona and California.

Bryan Arroyo,

Assistant Regional Director, Ecological Services Region 2, Albuquerque, New Mexico.

[FR Doc. 02–32674 Filed 12–26–02; 8:45 am]

BILLING CODE 4310–55–M

DEPARTMENT OF THE INTERIOR

Fish and Wildlife Service

RIN 1018–AI59

Tribal Landowner Incentive Program (T–LIP) Implementation Guidelines for Fiscal Year (FY) 2002

AGENCY: Fish and Wildlife Service, Interior.

ACTION: Notice; request for comments.

SUMMARY: The Department of the Interior Related Agencies Appropriations Act of 2002 allocated $40 million from the Land and Water Conservation Fund for conservation grants to States, the District of Columbia, Puerto Rico, Guam, the United States Virgin Islands, the Northern Mariana Islands, American Samoa, States and Tribes under a Landowner Incentive Program. The U.S. Fish and Wildlife Service (Service) herein proposes the guidance for the $4 million tribal component of the Landowner Incentive Program.

DATES: Interested parties should submit comments to the addresses under the heading **ADDRESSES** by January 27, 2003. Comments regarding information collection requirements should note that the Office of Management and Budget has up to 60 days to approve or disapprove information collection submissions, but may respond after 30 days. Therefore, an early comment response would be advised.

ADDRESSES: Comments to this proposed implementation guidance should be sent to: Robyn Thorson, Assistant Director—External Affairs, U.S. Fish and Wildlife Service, 1849 C Street, NW., Mail Stop 3012 MIB, Washington, DC 20240. Comments may be telefaxed as well to: 202/501–3524. For information collection requirements under the Paperwork Reduction Act, send comments to: Interior Desk Officer, Attn: 1018–0109, Office of Management and Budget, 725 17th Street, NW., Washington, DC 20503, and send a copy of these paperwork burden comments to U.S. Fish and Wildlife Service, Information Collection Clearance Officer, 4401 North Fairfax Drive, Room 224, Arlington, VA 22203.

The Service will make all comments received in response to this Notice available for public review during regular business hours at the Office of the Native American Liaison. If a respondent wishes his or her name or address to be withheld from public view, we will honor these wishes to the extent allowable by law, if the respondent makes this request known at the time of comment submission.

FOR FURTHER INFORMATION CONTACT: Patrick Durham, Office of the Native American Liaison, U.S. Fish and Wildlife Service, 1849 C Street, Mail Stop 3012 MIB, Washington, DC 20240, 202/208–4133.

SUPPLEMENTARY INFORMATION:

I. Background

The Department of the Interior and Related Agencies Appropriations Act of 2002 allocated $40 million from the Land and Water Conservation Fund for conservation grants to States, the District of Columbia, Puerto Rico, Guam, the United States Virgin Islands, the Northern Mariana Islands, American Samoa, States and Tribes under the Landowner Incentive Program. The U.S. Fish and Wildlife Service (Service) herein proposes the implementation guidance for the $4 million tribal component of the Landowner Incentive Program.

In recent years, natural resource managers have increasingly recognized that private lands play a pivotal role in linking or providing important habitats for fish, wildlife, and plant species. To protect and enhance these habitats through incentives for private landowners, Congress appropriated $40 million for the Service to administer a new Landowner Incentive Program (LIP) for States and tribes. The Service will award grants to States for actions and activities that protect and restore habitats that benefit Federally listed, proposed or candidate species, or other at-risk species on private lands. A primary objective of LIP is to establish, or supplement existing, landowner incentive programs that provide technical and financial assistance, including habitat protection and restoration, to private landowners for the protection and management of habitat to benefit Federally listed, proposed, or candidate species, or other at-risk species on private lands as stated in the appropriations language. LIP complements other Federal private lands conservation programs that focus on the conservation of habitat.

The Service is providing guidance to the public and, particularly, to federally-recognized tribes, in the administration of this $4 million Tribal Landowner Incentive Program (T–LIP). T–LIP will provide conservation monies to federally recognized tribes for actions and activities that protect and restore habitats that benefit Federally listed, proposed, or candidate species, or other at-risk species on tribal lands. T–LIP was created because of the unique relationship between the Federal government and tribes and because tribal lands are not private lands and

would not be eligible for funding under a State-administered LIP with a private lands grant distribution system. Because the tribes directly administer the funds rather than further distribute them to individual landowners, the criteria used in evaluating program proposals differ to some extent from those used in the LIP. The results of both the LIP and T–LIP would be similar in effect as both encourage voluntary conservation of natural resources. A series of questions and answers follow that describe the proposed guidelines in some detail.

The Service is proposing this guidance with the intent of gathering input from the affected communities. Whereas the Service is seeking comments on all aspects of T–LIP, several items are of particular interest. The Service wishes to determine whether it should limit funding to any one tribe to 5 percent (%) or some other amount of the total available funding. Secondly, the Service wishes to confirm whether the proposed ranking criteria appropriately addresses the intent of current law establishing the program. Thirdly, we seek comment whether the proposed 25 percent matching contribution is the appropriate matching amount. Finally, public opinion will also be helpful in determining whether or not and to what level tribal organizations may participate in T–LIP.

II. Proposed Implementation Guidelines

A. Eligibility

1. Who May Participate in the T–LIP?

The Service proposes a competitive process that affords *federally-recognized tribes* in all parts of the United States an opportunity to participate in the grant program.

2. Are State-Recognized Tribes or Petitioning Tribes Eligible To Receive Grants Under This Program?

No, only federally-recognized tribes are eligible to receive grants under this program. Federally-recognized tribes are listed in the **Federal Register** / Volume 67, Number 134 / July 12, 2002 / Notices.

3. Can Tribal Organizations or Other Non-Tribal Entities Receive Grants Under This Program?

No, however, the Service proposes that tribal organizations or other non-tribal entities that could not enter into grant agreements may do so as subgrantees or contractors to federally-recognized tribes. The Service is aware of various types of tribal organizations and other non-tribal entities and seeks public comments regarding their participation in T–LIP.

4. What Process Does the Service Propose To Use To Distribute T–LIP Funds?

The Service will request proposals through a **Federal Register** notice, direct contact, and other forms of outreach to eligible applicants. The Service's Regional Directors will receive all proposals.

5. Who Will Coordinate Regional Grant Application Submissions?

The Regional Native American Liaisons of the Service will coordinate the process to screen these proposals and rank them according to nationally uniform criteria.

6. How Will the Various Regional Grant Application Submissions Be Reviewed for National Funding?

A national panel will review Regionally-ranked proposals for recommendations to the Director of the Service (Director).

7. Who Will Be Empaneled To Serve as the National Review Panel?

The Regional Native American Liaisons of the Service will serve on the panel in addition to other Service and other Federal agency personnel, as appropriate and as may be identified by the Director.

8. Will Tribal Representatives Be Involved in Reviewing or Ranking Proposals?

No, only Federal employees will review and rank proposals in this initial year. However, the Service is interested in receiving comments from the public on ways to involve tribal representatives in this process in future years.

9. Who Will Make the Final Determination for Grant Approval?

The Director will make the final determination for grant approval.

B. Application Requirements

1. Is T–LIP Exempt From Federal Grant Program Compliance?

No, T–LIP is not exempt from any of the Federal grant program compliance requirements as specified in 43 CFR part 12, OMB Circulars A–102 and A–87, and Service Manual Chapters 552 FW1 and 523 FW1.

2. What Must Proposals Include for Participation in T–LIP?

Proposals must include a cover letter, program summary, program narrative, budget narrative, and tribal resolution of support as described herein.

—*A cover letter* briefly states the main features of the proposed program.

—*A program summary* describes, in one-half page, the type of activity that would take place if the Service funds the program.

—*A program narrative* clearly identifies the problems that the proposal will correct or help solve for the protection and management of habitat to benefit Federally listed, proposed, or candidate species, or other at-risk species on tribal lands, and the expected results or benefits. It must contain a needs assessment, objectives, time line, methodology, geographic location (with maps), monitoring plan, and identification of clear, obtainable and quantifiable goals and performance measures that will help achieve the management goals and objectives of the T–LIP and Service performance goals. The two relevant Service goals are the Sustainability of Fish and Wildlife Populations (Goal 1.2) and Habitat Conservation (Goal 2.3), which can be found in the Service's Long Term Strategic Plan for 2000 to 2005 at *http://planning.fws.gov/USFWStrategicPlanv3.pdf.* Related Service planning and results reports can be found at *http://planning.fws.gov.*

—*A budget narrative* clearly justifies all proposed costs and indicates that the grantee will provide adequate management systems for fiscal and contractual accountability, including annual monitoring and evaluation of progress toward desired project objectives, goals, and performance measures. It should include discussion of direct cost items such as salaries, equipment, consultant services, subcontracts and travel, as well as program matching or cost sharing information. Applicants may cover new project administrative costs, but they cannot include pre-existing administrative costs.

—*A resolution of support* from the appropriate tribal governing body states its support for the proposal.

3. Where Can Applicants Obtain a Grant Proposal Package?

Applicants can obtain a grant proposal package from the appropriate Regional Native American Liaison of the Service, as listed in Subpart IV of this document.

4. Are Matching Funds Required?

Yes, the Service proposes a minimum of 25 percent (%) non-Federal matching funds for participation in this program. This is the same matching contribution

requirement States must make under the LIP.

5. Are In-Kind Contributions Eligible as Matching Funds?

In kind contributions may be counted towards the required 25% non-federal matching requirement. Any in-kind contributions in excess of the required 25 percent (%) may be used as a match to improve the potential ranking of a proposal. The federal government has defined ''in-kind'' as non-cash contributions made by the tribe. In-kind contributions must be necessary and reasonable for carrying out the project, and must represent the same value that the Service would have paid for similar services or property if purchased on the open market. Allowable in-kind contributions are defined in 43 CFR part 12.64. The following website provides additional information: *http://training.fws.gov/fedaid/toolkit/inkind.pdf.*

6. Can a Tribe Submit More Than One Grant Proposal?

Tribes are encouraged to submit a single comprehensive grant proposal. After all proposals have been ranked, the Service may allow tribes to submit additional proposals if all of the funding has not been obligated.

7. Is There a Maximum Level of Funding That Will Be Considered Under T–LIP?

The Service wants to encourage the maximum amount of participants in the T–LIP program. Therefore, the Service recommends a maximum of no more than 5 percent (%) of the total available funds should be awarded to any tribe. However, depending upon the number of proposals submitted and the relative merit of each proposal, some tribes may be awarded sums which would exceed this proposed 5 percent (%) funding level.

8. Is There a Minimum Level of Funding That Will Be Considered Under the T–LIP?

No, the Service recommends no minimum level of funding.

C. Ranking Criteria

What Ranking Criteria Is the Service Proposing To Use?

The Service has developed the following potential ranking criteria and weight factors for review and comment. The Service will be using these criteria in evaluating each proposal on a scale of zero (0) through one hundred (100) points.

Benefit of the Program: What are the probable significant benefits to fish and wildlife resources and their habitat if this program is successfully completed? (0–15 points)

Performance Measures: To what extent does the proposal provide obtainable and quantifiable performance measures and a means to monitor, evaluate, and report on these measures compared to an initial baseline? The measures should be specific, clear, and provide demonstrable benefits to the target species of the action. These actions should support the goals of the T–LIP and relevant Service performance goals. The two relevant Service goals are Sustainability of Fish and Wildlife Populations (Goal 1.2) and Habitat Conservation (Goal 2.3) which can be found at *http://planning.fws.gov/USFWStrategicPlanv3.pdf.* (0–15 points)

Work Plan: Are the program activities and objectives well-designed and achievable? (0–10 points)

Budget: Are all major budget items justified in relation to the program objectives and clearly explained in the narrative description? (0–15 points)

Capacity Building: To what extent does the program increase the grantee's capacity to provide for the protection, restoration and management of habitat to benefit Federally listed, proposed, or candidate species, or other at-risk species on tribal lands as stated in the appropriations language? (0–10 points)

Commitment: To what extent does the applicant display commitment to the program through in-kind contribution or matching funds? (0–10 points)

Partnerships: To what extent does the program incorporate contributions from other non-Federal partners in the form of either cash or in-kind services? (0–15 points)

Administrative Costs: What is the percentage (%) of program funds identified for use on actual projects as opposed to staff and related administrative costs? Ranking will be improved as the percentage of funds identified for staff and related administrative costs decrease. (0–10 points)

D. T–LIP Operations and Management

1. In the Course of Implementing a T–LIP Project Can Grantees Use T–LIP Funds To Cover Costs of Environmental Review, Habitat Evaluation, Permit Review (e.g., Section 404), and Other Environmental Compliance Activities Associated With a T–LIP Project or Program?

Yes, the T–LIP funds can cover these activities provided they are directly related to the T–LIP project or program being funded and are included in the budget and discussed in the program and budget narratives.

2. What Activities Are Eligible Under T–LIP?

Eligible programs include those that improve, preserve or maintain habitat for endangered, threatened, candidate or other at-risk species. Examples of the types of projects within identified tribal programs that the Service may fund include using prescribed burning to restore grasslands that support imperiled species, fencing to exclude animals from sensitive habitats, or planting native vegetation to restore degraded habitat.

3. Are There Any Specific Activities That Are Not Allowable Under the Guidance of T–LIP?

A proposal cannot include activities required to comply with a Biological Opinion or include activities required to comply with a permit (e.g., mitigation responsibilities). However, a proposal can include activities that implement conservation recommendations.

4. What Species Are Considered Endangered, Threatened, Candidate or At-Risk?

Those species federally listed as endangered or threatened under the Endangered Species Act of 1973, as amended, or species proposed or candidates for such listing, or at-risk species (*e.g.*, species recognized as a species of conservation concern, such as species listed or identified by a State or a tribe).

5. Does the Term ''Private Lands'' in the Landowner Incentive Program Appropriation Language Exclude Tribal Trust Lands From Participation in T–LIP?

No, tribal trust lands are not ''public lands.'' For the purposes of inclusion under T–LIP, federally recognized tribes are considered landowners and are eligible.

6. Is the T–LIP Program a Continuous Revenue Source for Tribal Wildlife Programs?

No, there is no authorization for appropriation of funds beyond FY 2002. Funds appropriated in FY 2002 are available until spent.

7. Can the Grantee hold T–LIP Funds in an Interest-Bearing Account?

No, T–LIP grant funds may not be held in interest-bearing accounts.

E. Grant Award Procedures

1. What Additional Information Must Be Provided to the Service by the Grantees Once Awards Are Announced?

Once the Director notifies grantees that their proposal was selected for

funding, the recipient must submit a Standard Form 424 (Application for Federal Assistance) along with a grant agreement and attachments as required by Federal regulations. As with our other Federal programs, T–LIP agreements must comply with 43 CFR part 12, the National Environmental Policy Act, Section 7 of the Endangered Species Act, the National Historic Preservation Act, and all other applicable Federal laws and regulations. This grant program is also subject to provisions of Office of Management and Budget Circulars No. A–87, A–102, and A–133 (*http://www.whitehouse.gov/omb/circulars*).

2. Once Ggrants Are Awarded, Who Should the Grantee Consider as the Lead Contact Person?

Once grants have been awarded, the grantee should consider the appropriate Regional Native American Liaison of the Service as the lead contact person for all matters pertaining to the particular award.

3. When Will the Service Award T–LIP Grants?

Once the Service has reviewed and ranked all eligible T–LIP grant proposals, the Director will make his final decision within 30 days of the recommendations of the national review panel.

4. How Will Funds Be Disbursed Once the Service Has Awarded T–LIP Grants?

Subsequent to funding approval, grant funds are electronically delivered to the Health and Human Services' SMARTLINK payment system. Through this electronic funds transfer (EFT) grantees will be able to receive their funds on a reimbursement basis. Some of the tribal grantees may not be EFT compliant. In order to insure optimal service to potential grantees within the current Federal Aid process, grantees will need to obtain EFT capabilities. Grantees may request an advance of no more than 25 percent (%) of the total grant. Such requests will be individually reviewed by the Service and honored if sufficient hardship or need is demonstrated that would preclude the success of the proposal if advance funds are not made available.

5. What Reporting Requirements Must Tribes Meet Once Funds Are Obligated Under a T–LIP Grant Agreement?

The Service requires an annual progress report and Financial Status Report (FSR) for grants longer than one year. A final performance report and FSR (SF–269) are due to the Regional Office within 90 days of the grant agreement ending date. In the annual progress report, the tribes must include a list of project accomplishments relative to those which were planned in the grant agreement. The effectiveness of each tribe's program, as reported in the annual progress reports, will be an important factor considered during the grant award selection process in subsequent years.

III. Procedural Requirements

A. Regulatory Planning and Review (Executive Order 12866)

This policy document identifies proposed eligibility criteria and selection factors that may be used to award grants under the T–LIP program. The Service developed this draft policy to ensure consistent and adequate evaluation of grant proposals that are voluntarily submitted and to help perspective applicants understand how the Service will award grants. According to Executive Order 12866, this policy document is significant and has been reviewed by the Office of Management and Budget (OMB) in accordance with the four criteria discussed below.

1. The T–LIP will not have an annual effect on the economy of $100 million or more or adversely affect in a material way the economy, a sector of the economy, productivity, jobs, the environment, public health or safety, or State or local communities. The Department of the Interior and Related Agencies Appropriations Act for Fiscal Year (FY) 2002 allowed the Secretary to create the T–LIP program. In addition, grants that are funded will generate other, secondary benefits, including benefits to natural systems (*e.g.*, air, water) and local economies. All of these benefits are widely distributed and are not likely to be significant in any single location. It is likely that some residents where projects are initiated will experience some level of benefit, but quantifying these effects at this time is not possible. We do not expect the sum of all the benefits from this program, however, to have an annual effect on the economy of $100 million or more.

2. We do not believe the T–LIP would create inconsistencies with other agencies' actions. Congress has given the Service the responsibility to administer this program.

3. As a new grant program, the T–LIP would not materially alter the budgetary impact of entitlements, user fees, loan programs, or the rights and obligations of their recipients. This policy document establishes a new grant program that Public Law 107–63 authorizes, which should make greater resources available to applicants. The submission of grant proposals is completely voluntary, but necessary to receive benefits. When an applicant decides to submit a grant proposal, the proposed eligibility criteria and selection factors identified in this policy can be construed as requirements placed on the awarding of the grants. Additionally, we will place further requirements on grantees that are selected to receive funding under the T–LIP program in order to obtain and retain the benefit they are seeking. These requirements include specific Federal financial management and reporting requirements as well as specific habitat improvements or other management activities described in the applicant's grant proposal.

4. OMB has determined that this policy raises novel legal or policy issues, and, as a result, this document has undergone OMB review.

B. Regulatory Flexibility Act (5 U.S.C. 601 et seq.)

Under the Regulatory Flexibility Act, 5 U.S.C. 601 *et seq.*, as amended, whenever an agency is required to publish a notice of rulemaking for any proposed or final rule, it must prepare and make available for public comment a regulatory flexibility analysis that describes the effects of the rule on small entities (*e.g.*, small businesses, small organizations, and small government jurisdictions). Indian tribes are not considered to be small entities for purposes of the Act and, consequently, no regulatory flexibility analysis has been done.

C. Small Business Regulatory Enforcement Fairness Act (SBREFA) of 1996

This proposed implementation guidance is not considered a major rule under the Small Business Regulatory Enforcement Fairness Act (SBREFA) of 1996 (5 U.S.C. 804(2)) because it does not have an annual effect on the economy of $100 million or more. The yearly amount of T–LIP program funds is limited to $4 million.

This proposed implementation guidance will not cause a major increase in costs or prices for consumers, individual industries, Federal, state, or local government agencies, or geographic regions. Actions under this proposed implementation guidance will distribute Federal funds to Indian tribal governments and tribal entities for purposes consistent with activities akin to other Service programs designed to enable landowners to protect and conserve species as may be protected

under the Endangered Species Act and the habitat that supports such species.

This proposed implementation guidance does not have significant adverse effects on competition, employment, investment, productivity, innovation, or the ability of U.S.-based enterprises to compete with foreign-based enterprises.

D. Unfunded Mandates Reform Act

This proposed implementation guidance would not impose unfunded mandates as defined by the Unfunded Mandates Reform Act of 1995 (Public Law 104–4, March 22, 1995, 109 Stat. 48). This proposed rule will not result in the expenditure by State, local and tribal governments, in the aggregate, or by the private sector, of $100 million or more in any one year (2 U.S.C. 1532).

E. Takings Implication Assessment (Executive Order 12630)

This proposed implementation guidance does not have significant ''takings'' implications. This proposed implementation guidance does not pertain to ''taking'' of private property interests, and its impact on private property would be an incentive that is totally landowner driven.

F. Executive Order 13211—Energy Effects

On May 18, 2001, the President issued Executive Order 13211 which speaks to regulations that significantly affect energy supply, distribution, and use. The Executive Order requires agencies to prepare Statements of Energy Effects when undertaking certain actions. This proposed implementation guidance is not expected to significantly affect energy supplies, distribution, or use. Therefore, no Statement of Energy Effects has been prepared.

G. Executive Order 12612—Federalism

This proposed implementation guidance does not have significant Federalism effects because it pertains solely to Federal-tribal relations and will not interfere with the roles, rights, and responsibilities of States.

H. Civil Justice Reform (Executive Order 12988)

This proposed implementation guidance does not unduly burden the judicial system and meets the applicable standards provided in sections 3(a) and 3(b)(2) of the Executive Order 12988.

I. National Environmental Policy Act (NEPA)

This proposed implementation guidance does not constitute a Federal action significantly affecting the quality of the human environment. The Service has determined that the issuance of the proposed implementation guidance is categorically excluded under the Department of the Interior's NEPA procedures in 516 DM 2, Appendix 1 and 516 DM 6, Appendix 1. The Service will ensure that grants funded through the T-LIP program are in compliance with NEPA.

J. Consultation and Coordination with Indian Tribal Governments (Executive Order 13175)

Pursuant to Executive Order 13175 of November 6, 2000, ''Consultation and Coordination with Indian Tribal Governments,'' we have committed to consulting with tribal representatives in the finalization of the implementation guidance for the T-LIP. We have evaluated any potential effects on federally-recognized Indian tribes and have determined that there are no potential adverse effects. This guidance expands tribal participation in Service programs and allows for opportunities for tribal wildlife management and conservation initiatives across Indian Country. We will continue to consult with tribal governments and tribal entities throughout the comment period, as a part of the rulemaking process, and beyond in furthering our mutual goals for the T-LIP.

K. Paperwork Reduction Act (44 U.S.C. 3501)

The information collection requirements of this program will be largely met through the Federal Aid Grants Application Booklet. Federal Aid has applied for OMB approval under Control Number 1018–1019. This approval applies to grants managed by the Division of Federal Aid, even if for other Divisions of the Service. We are collecting this information relevant to the eligibility, substantiality, relative value, and budget information from applicants in order to make awards of grants under these programs. We are collecting financial and performance information to track costs and accomplishments of these grant programs. Completion of these application and reporting requirements will involve a paperwork burden of approximately 80 hours per grant proposal. *This does not include any burden hours previously approved by OMB for standard or Fish and Wildlife Service forms.* Your response to this information collection is required to receive benefits in the form of a grant, and does not carry any premise of confidentiality. An agency may not conduct or sponsor, and a person is not required to respond to, a collection of information unless it displays a currently valid OMB control number. With respect to this 80 hour per application increase in burden hours, interested parties should contact the Information Collection Clearance Officer listed in the **ADDRESSES** section of this document.

IV. Native American Liaisons for the Fish and Wildlife Service

Regional correspondence and telephone contacts for the Service for this proposed implementation guidance and other appropriate purposes are as follows:

Region 1—Hawaii, Idaho, Oregon, Washington, Nevada, and California

Native American Liaison, U.S. Fish and Wildlife Service, 911 N.E. 11th Avenue, Portland, Oregon 97232–4181, T–LIP Contact: Scott Aiken (503) 231–6121

Region 2—Arizona, New Mexico, Oklahoma, and Texas

Native American Liaison, U.S. Fish and Wildlife Service, 500 Gold Avenue, SW., Albuquerque, New Mexico 87103, T–LIP Contact: John Antonio (505) 248–6810

Region 3—Illinois, Indiana, Iowa, Michigan, Minnesota, Missouri, Ohio, and Wisconsin

Native American Liaison, U.S. Fish and Wildlife Service, One Federal Drive, Fort Snelling, Minnesota, T–LIP Contact: John Leonard (612) 713–5108

Region 4—Alabama, Arkansas, Florida, Georgia, Kentucky, Louisiana, Mississippi, North Carolina, South Carolina, and Tennessee

Native American Liaison, U.S. Fish and Wildlife Service, 1875 Century Boulevard, Suite 410, Atlanta, Georgia 30345, T–LIP Contact: Jim Brown (404) 679–7125

Region 5—Connecticut, Delaware, District of Columbia, Maine, Maryland, Massachusetts, New Hampshire, New Jersey, New York, Pennsylvania, Rhode Island, Vermont, Virginia, and West Virginia

Native American Liaison, U.S. Fish and Wildlife Service, 300 Westgate Center Drive, Hadley, Massachusetts 01035–9589, T–LIP Contact: D.J. Monette (413) 253–8662 or (609) 646–9310

Region 6—Colorado, Kansas, Montana, Nebraska, North Dakota, South Dakota, Utah, and Wyoming

Native American Liaison, U.S. Fish and Wildlife Service, PO Box 25486—Denver Federal Center, Denver,

Colorado 80225–0486, T–LIP Contact: David Redhorse (303) 236–7905 x253

Region 7—Alaska

Native American Liaison, U.S. Fish and Wildlife Service, 1011 East Tudor Road, Anchorage, Alaska 99503–6199, T–LIP Contact: Tony DeGange (907) 786–3492

Dated: October 1, 2002.

Paul Hoffman,

Acting Assistant Secretary, Fish and Wildlife and Parks.

[FR Doc. 02–32701 Filed 12–26–02; 8:45 am]

BILLING CODE 4310–55–P

DEPARTMENT OF THE INTERIOR

Fish and Wildlife Service

RIN 1018–AI58

Tribal Wildlife Grants (TWG) Program Implementation Guidelines for Fiscal Year (FY) 2002

AGENCY: Fish and Wildlife Service, Interior.

ACTION: Notice; request for comments.

SUMMARY: The Department of the Interior and Related Agencies Appropriations Act for Fiscal Year (FY) 2002 authorized an appropriation of $85 million for wildlife conservation grants to States and to the District of Columbia, U.S. Territories, and Tribes under provisions of the Fish and Wildlife Act of 1956 and the Fish and Wildlife Coordination Act, for the development and implementation of programs for the benefit of wildlife and their habitat, including species that are not hunted or fished. The Act further specified that the Fish and Wildlife Service (Service) use $5 million of the funds to establish a competitive grant program available to federally-recognized Indian tribes. This language allows the Secretary, through the Director of the Service, to establish a separate tribal grant program that would not be subject to the provisions of the formula-based State Wildlife Grant program, or other requirements of the State Wildlife Grants portion of Public Law 107–63. The Service is providing draft implementation guidance for this $5 million Tribal Wildlife Grant program.

DATES: Interested parties should submit comments to the addresses under the heading **ADDRESSES** by January 27, 2003. Commentors regarding information collection requirements should note that the Office of Management and Budget has up to 60 days to approve or disapprove information collection submissions, but may respond after 30 days. Therefore, an early comment response would be advised.

ADDRESSES: Comments to this proposed implementation guidance should be sent to: Robyn Thorson, Assistant Director—External Affairs, U.S. Fish and Wildlife Service, 1849 C Street, NW, Mail Stop 3012 MIB, Washington, DC 20240. Comments may be telefaxed as well to: 202/501–3524. For information collection requirements under the Paperwork Reduction Act, send comments to: Interior Desk Officer, Attn: 1018–0109, Office of Management and Budget, 725 17th Street, NW, Washington, DC 20503, and send a copy of these paperwork burden comments to U.S. Fish and Wildlife Service, Information Collection Clearance Officer, 4401 North Fairfax Drive, Room 224, Arlington, VA 22203.

The Service will make all comments received in response to this Notice available for public review during regular business hours at the Office of the Native American Liaison. If a respondent wishes his or her name or address to be withheld from public view, we will honor these wishes to the extent allowable by law, if the respondent makes this request known at the time of comment submission.

FOR FURTHER INFORMATION CONTACT: Patrick Durham, Office of the Native American Liaison, U.S. Fish and Wildlife Service, 1849 C Street, Mail Stop 3012 MIB, Washington, DC 20240, 202/208–4133.

SUPPLEMENTARY INFORMATION:

I. Background

The Department of the Interior and Related Agencies Appropriations Act for Fiscal Year (FY) 2002 (Public Law 107–63) authorized an appropriation of $85 million for wildlife conservation grants to States and to the District of Columbia, U.S. Territories, and Tribes under provisions of the Fish and Wildlife Act of 1956 and the Fish and Wildlife Coordination Act, for the development and implementation of programs for the benefit of wildlife and their habitat, including species that are not hunted or fished. The Act further specified that the U.S. Fish and Wildlife Service (Service) use $5 million of the funds to establish a competitive grant program available to federally-recognized tribes. This language allows the Secretary, through the Director of the Service, to establish a separate tribal grant program that would not be subject to the provisions of the formula-based State Wildlife Grant program, or other requirements of the State Wildlife Grants portion of Public Law 107–63. The Service is providing guidance to the public and, particularly, to federally-recognized tribes, in the administration of this $5 million Tribal Wildlife Grant (TWG) program. A series of questions and answers follow that describe the proposed guidelines in some detail.

The Service is proposing this guidance with the intent of gathering input from the affected communities. Whereas the Service is seeking comments on all aspects of TWG, several items are of particular interest. The Service is soliciting comments on whether it should limit funding to any one tribe to 5 percent (%) or some other amount of the total available funding. The Service also wishes to determine whether the proposed ranking criteria appropriately addresses Congressional intent for the use of such funds. Public input will also be helpful in the appropriate participation level of tribal organizations in implementing TWG-funded activities.

II. Proposed Implementation Guidelines

A. Eligibility

1. Who May Participate in the TWG Program?

The Service proposes a competitive process that affords federally-recognized tribes in all parts of the United States an opportunity to participate in the grant program.

2. Are State-Recognized Tribes or Petitioning Tribes Eligible To Receive Grants Under This Program?

No, only federally-recognized tribes are eligible to receive grants under this program. Federally-recognized tribes are listed in the **Federal Register**/Volume 67, Number 134/July 12, 2002/Notices.

3. Can Tribal Organizations or Other Non-Tribal Entities Receive Grants Under This Program?

No, however, the Service proposes that tribal organizations or other non-tribal entities that could not enter into grant agreements may do so as subgrantees or contractors to federally-recognized tribes. The Service is aware of various types of tribal organizations and other non-tribal entities and seeks public comments regarding their participation in TWG.

4. What Process Does the Service Propose To Use To Distribute TWG Funds?

The Service will request proposals through a **Federal Register** notice, direct contact, and other forms of outreach to eligible applicants. The Service's Regional Directors will receive all proposals.

5. Who Will Coordinate Regional Grant Application Submissions?

The Regional Native American Liaisons of the Service will coordinate the process to screen these proposals and rank them according to nationally uniform criteria.

6. How Will the Various Regional Grant Application Submissions Be Reviewed for National Funding?

A national panel will review Regionally-ranked proposals for recommendations to the Director of the Service (Director).

7. Who Will Be Empaneled To Serve as the National Review Panel?

The Regional Native American Liaisons of the Service will serve on the panel in addition to other Service and other Federal agency personnel, as appropriate and as may be identified by the Director.

8. Will Tribal Representatives Be Involved in Reviewing or Ranking Proposals?

No, only Federal employees will review and rank proposals in this initial year. However, we are interested in receiving comments from the public on ways to involve tribal representatives in this process in future years.

9. Who Will Make the Final Determination for Grant Approval?

The Director will make the final determination for grant approval.

B. Application Requirements

1. Is the TWG Program Exempt From Federal Grant Program Compliance?

No, the TWG program is not exempt from any of the Federal grant program compliance requirements as specified in 43 CFR part 12, OMB Circulars A–102 and A–87, and Service Manual Chapters 552 FW1 and 523 FW1.

2. What Must Proposals for Participation in the TWG Program Include?

Proposals must include a cover letter, program summary, program narrative, budget narrative, and tribal resolution of support as described herein.

- A cover letter briefly states the main features of the proposed project.
- A program summary describes, in one-half page, the type of activity that would take place if the service funds the program.
- A program narrative clearly identifies the problems that the proposal will correct or help solve as they relate to the development and implementation of programs for the benefit of wildlife and their habitat, including species that are not hunted or fished, and the expected results or benefits. It must contain a needs assessment, objectives, time line, methodology, geographic location (with maps), monitoring plan, and identification of clear, obtainable, and quantifiable goals and performance measures that will help achieve the management goals and objectives of the TWG and relevant Service performance goals. The two relevant Service goals are the Sustainability of Fish and Wildlife Populations (Goal 1.2) and Habitat Conservation (Goal 2.3), which can be found in the Service's Long Term Strategic Plan for 2000 to 2005 at *http://planning.fws.gov/USFWStrategicPlanv3.pdf.* Related Service planning and results can be found at *http://planning.fws.gov/.*
- A budget narrative clearly justifies all proposed costs and indicates that the grantee will provide adequate management systems for fiscal and contractual accountability, including annual monitoring and evaluation of progress toward desired project objectives, goals, and performance measures. It should include discussion of direct cost items such as salaries, equipment, consultant services, subcontracts and travel, as well as project matching or cost sharing information. Applicants may cover new administrative costs, but they cannot include pre-existing administrative costs.
- A resolution of support from the appropriate tribal governing body stating its support for the proposal.

3. Where Can Applicants Obtain a Grant Proposal Package?

Applicants can obtain a grant proposal package from the appropriate Service Regional Native American Liaison, as listed in Subpart IV of this document.

4. Are Matching Funds Required?

No, however, it is encouraged and the proposed ranking criteria will consider matching funds as an indication of tribal commitment to the program and to encourage partnerships.

5. Are In-Kind Contributions Eligible as Matching Funds?

Yes, in-kind contributions may be used as a match to improve the potential ranking of a proposal. The Service has defined ''in-kind'' as non-cash contributions made by the tribe. In-kind contributions must be necessary and reasonable for carrying out the program, and must represent the same value that the Service would have paid for similar services or property if purchased on the open market. Allowable in-kind contributions are defined in 43 CFR part 12.64. The following website provides additional information: *http://training.fws.gov/fedaid/toolkit/inkind.pdf.*

6. Can a Tribe Submit More Than One Grant Proposal?

Tribes are encouraged to submit a single comprehensive grant proposal. After all proposals have been ranked, the Service may allow tribes to submit additional proposals if the funding has not all been obligated.

7. Is There a Maximum Level of Funding That Will Be Considered Under the TWG Program?

The Service wants to encourage the maximum amount of participants in the TWG program. Therefore, the Service recommends a maximum of no more than 5 percent (%) of the total available funds be awarded to any tribe. However, depending upon the number of proposals submitted and the relative merit of each proposal, some tribes may be awarded sums which would exceed this proposed 5 percent (%) funding level.

8. Is There a Minimum Level of Funding That Will Be Considered Under the TWG Program?

No, the Service recommends no minimum level of funding.

C. Ranking Criteria

What ranking criteria is the Service proposing to use?

The Service has developed the following potential ranking criteria and weight factors for review and comment. The Service will be using these criteria in evaluating each proposal on a scale of zero (0) through one hundred (100) points.

Benefit: What are the expected benefits to fish and wildlife resources, including species that are not hunted or fished, and their habitat if this program is successfully completed? (0–15 points)

Performance Measures: To what extent does the proposal provide obtainable and quantifiable performance measures and a means to monitor, evaluate, and report on these measures compared to an initial baseline? The measures should be specific, clear and provide demonstrable benefits to the target species of the action. These actions should support the goals of the TWG and relevant Service performance goals. The two relevant Service performance goals are Sustainability of Fish and Wildlife Populations (Goal 1.2) and Habitat Conservation (Goal 2.3) which can be found at *http://*

planning.fws.gov/USFWStrategicPlanv3.pdf. (0–15 points)

Work Plan: Are the program activities and objectives well-designed and achievable? (0–10 points)

Budget: Are all major budget items justified in relation to the program objectives and clearly explained in the narrative description? (0–15 points)

Capacity Building: To what extent does the program increase the grantee's capacity to provide for the benefit of wildlife and their habitat? (0–10 points)

Commitment: To what extent does the applicant display commitment to the program through in-kind contribution or matching funds? (0–10 points)

Partnerships: To what extent does the program incorporate contributions from other non-Federal partners in the form of either cash or in-kind services? (0–15 points)

Administrative Costs: What is the percentage (%) of program funds identified for use on actual projects as opposed to staff and related administrative costs? Ranking will be improved as the percentage of funds identified for staff and related administrative costs decrease. (0–10 points)

D. TWG Operations and Management

1. In the Course of Implementing a TWG Project or Program Can Grantees Use TWG Funds To Pay for Costs of Conservation Law Enforcement?

Yes, however, such effort must be critical to the development and implementation of the TWG project or program and for the benefit of wildlife and their habitat.

2. What Activities Are Included in the ''Development and Implementation of Programs for the Benefit of Wildlife'' as Referenced in the Department of the Interior and Related Agencies Appropriations Act for FY 2002?

Activities may include, but are not limited to, planning for wildlife and habitat conservation; ongoing and/or new fish and wildlife management actions; fish and wildlife related laboratory and field research; natural history studies; habitat mapping; field surveys and population monitoring; habitat preservation; land acquisition; conservation easements; and outreach efforts.

3. Can Grantees Use TWG Funds To Cover Costs of Environmental Review, Habitat Evaluation, Permit Review (*e.g.*, Section 404), and Other Environmental Compliance Activities Associated With a TWG Project?

Yes, they can fund these activities provided they are directly related to the TWG program or project being funded and are included in the budget and discussed in the program and budget narratives.

4. Are There Any Specific Activities That Are Not Allowable Under the Guidance of TWG?

A proposal cannot include activities required to comply with a Biological Opinion or include activities required to comply with a permit (*e.g.*, mitigation responsibilities). However, a proposal can include activities that implement conservation recommendations.

5. Is the TWG Program a Continuous Revenue Source for Tribal Wildlife Programs?

No, there is no authorization for appropriation of funds beyond FY 2002. Funds appropriated in FY 2002 are available until spent.

6. Can the Grantee Hold TWG Funds in an Interest-Bearing Account?

No, TWG grant funds may not be held in interest-bearing accounts.

E. Grant Award Procedures

1. What Additional Information Must Be Provided to the Service by the Grantees Once Awards Are Announced?

Once the Director notifies grantees that their proposal was selected for funding, the recipient must submit a Standard Form 424 (Application for Federal Assistance) along with a grant agreement and attachments as required by Federal regulations. As with our other Federal programs, TWG agreements must comply with 43 CFR part 12, the National Environmental Policy Act, Section 7 of the Endangered Species Act, the National Historic Preservation Act, and all other applicable Federal laws and regulations. This grant program is also subject to provisions of Office of Management and Budget Circulars No. A–87, A–102, and A–133 (*http://www.whitehouse.gov/omb/circulars*).

2. Once Grants Are Awarded, Who Should the Grantee Consider as the Lead Contact Person?

Once grants have been awarded, the grantee should consider the appropriate Regional Native American Liaison of the Service as the lead contact person for all matters pertaining to the particular award.

3. When Will the Service Award TWG Grants?

Once the Service has reviewed and ranked all eligible TWG grant proposals, the Director will make his final decision within 30 days of the recommendations of the national review panel.

4. How Will Funds Be Disbursed Once the Service Has Awarded TWG Grants?

Subsequent to funding approval, grant funds are electronically delivered to the Health and Human Services' SMARTLINK payment system. Through this electronic funds transfer (EFT) grantees will be able to receive their funds on a reimbursement basis. Some of the tribal grantees may not be EFT compliant. In order to insure optimal service to potential grantees within the current Federal Aid process, grantees will need to obtain EFT capabilities. Grantees may request an advance of no more than 25 percent (%) of the total grant. Such requests will be individually reviewed by the Service and honored if sufficient hardship or need is demonstrated that would preclude the success of the proposal if advance funds are not made available.

5. What Reporting Requirements Must Tribes Meet Once Funds Are Obligated Under a TWG Grant Agreement?

The Service requires an annual progress report and Financial Status Report (FSR) for grants longer than one year. A final performance report and FSR (SF–269) are due to the Regional Office within 90 days of the grant agreement ending date. In the annual progress report, the tribes must include a list of project accomplishments relative to those which were planned in the grant agreement. The effectiveness of each tribe's program, as reported in the annual progress reports, will be an important factor considered during the grant award selection process in subsequent years.

III. Procedural Requirements

A. Regulatory Planning and Review (Executive Order 12866)

This policy document identifies proposed eligibility criteria and selection factors that may be used to award grants under the TWG program. The Service developed this draft policy to ensure consistent and adequate evaluation of grant proposals that are voluntarily submitted and to help perspective applicants understand how the Service will award grants. According to Executive Order 12866, this policy document is significant and has been reviewed by the Office of Management and Budget (OMB) in accordance with the four criteria discussed below.

1. The TWG will not have an annual effect on the economy of $100 million or more or adversely affect in a material

way the economy, a sector of the economy, productivity, jobs, the environment, public health or safety, or State or local communities. The Department of the Interior and Related Agencies Appropriations Act for Fiscal Year (FY) 2002 allowed the Secretary to create the TWG program. In addition, grants that are funded will generate other, secondary benefits, including benefits to natural systems (*e.g.*, air, water) and local economies. All of these benefits are widely distributed and are not likely to be significant in any single location. It is likely that some residents where projects are initiated will experience some level of benefit, but quantifying these effects at this time is not possible. We do not expect the sum of all the benefits from this program, however, to have an annual effect on the economy of $100 million or more.

2. We do not believe the TWG program would create inconsistencies with other agencies' actions. Congress has given the Service the responsibility to administer this program.

3. As a new grant program, the TWG program would not materially alter the budgetary impact of entitlements, user fees, loan programs, or the rights and obligations of their recipients. This policy document establishes a new grant program that Public Law 107–63 authorizes, which should make greater resources available to applicants. The submission of grant proposals is completely voluntary, but necessary to receive benefits. When an applicant decides to submit a grant proposal, the proposed eligibility criteria and selection factors identified in this policy can be construed as requirements placed on the awarding of the grants. Additionally, we will place further requirements on grantees that are selected to receive funding under the TWG program in order to obtain and retain the benefit they are seeking. These requirements include specific Federal financial management and reporting requirements as well as specific habitat improvements or other management activities described in the applicant's grant proposal.

4. OMB has determined that this policy raises novel legal or policy issues, and, as a result, this document has undergone OMB review.

B. Regulatory Flexibility Act (5 U.S.C. 601 et seq.)

Under the Regulatory Flexibility Act, 5 U.S.C. 601 *et seq.*, as amended, whenever an agency is required to publish a notice of rulemaking for any proposed or final rule, it must prepare and make available for public comment a regulatory flexibility analysis that describes the effects of the rule on small entities (*e.g.*, small businesses, small organizations, and small government jurisdictions). Indian tribes are not considered to be small entities for purposes of the Act and, consequently, no regulatory flexibility analysis has been done.

C. Small Business Regulatory Enforcement Fairness Act (SBREFA) of 1996

This proposed implementation guidance is not considered a major rule under the Small Business Regulatory Enforcement Fairness Act (SBREFA) of 1996 (5 U.S.C. 804(2)) because it does not have an annual effect on the economy of $100 million or more. The yearly amount of TWG program funds is limited to $5 million.

This proposed implementation guidance will not cause a major increase in costs or prices for consumers, individual industries, Federal, state, or local government agencies, or geographic regions. Actions under this proposed implementation guidance will distribute Federal funds to Indian tribal governments and tribal entities for purposes consistent with activities akin to programs under the Fish and Wildlife Act of 1956 and the Fish and Wildlife Coordination Act.

This proposed implementation guidance does not have significant adverse effects on competition, employment, investment, productivity, innovation, or the ability of U.S.-based enterprises to compete with foreign-based enterprises.

D. Unfunded Mandates Reform Act

This proposed implementation guidance would not impose unfunded mandates as defined by the Unfunded Mandates Reform Act of 1995 (Public Law 104–4, March 22, 1995, 109 Stat. 48). This proposed rule will not result in the expenditure by State, local and tribal governments, in the aggregate, or by the private sector, of $100 million or more in any one year (2 U.S.C. 1532).

E. Takings Implication Assessment (Executive Order 12630)

This proposed implementation guidance does not have significant ''takings'' implications. This proposed implementation guidance does not pertain to ''taking'' of private property interests, nor does it impact private property.

F. Executive Order 13211—Energy Effects

On May 18, 2001, the President issued Executive Order 13211 which speaks to regulations that significantly affect energy supply, distribution, and use. The Executive Order requires agencies to prepare Statements of Energy Effects when undertaking certain actions. This proposed implementation guidance is not expected to significantly affect energy supplies, distribution, or use. Therefore, no Statement of Energy Effects has been prepared.

G. Executive Order 12612—Federalism

This proposed implementation guidance does not have significant Federalism effects because it pertains solely to Federal-tribal relations and will not interfere with the roles, rights, and responsibilities of States.

H. Civil Justice Reform (Executive Order 12988)

This proposed implementation guidance does not unduly burden the judicial system and meets the applicable standards provided in sections 3(a) and 3(b)(2) of the Executive Order 12988.

I. National Environmental Policy Act (NEPA)

This proposed implementation guidance does not constitute a Federal action significantly affecting the quality of the human environment. The Service has determined that the issuance of the proposed implementation guidance is categorically excluded under the Department of the Interior's NEPA procedures in 516 DM 2, Appendix 1 and 516 DM 6, Appendix 1. The Service will ensure that grants funded through the TWG program are in compliance with NEPA.

J. Consultation and Coordination With Indian Tribal Governments (Executive Order 13175)

Pursuant to Executive Order 13175 of November 6, 2000, ''Consultation and Coordination with Indian Tribal Governments,'' we have committed to consulting with tribal representatives in the finalization of the implementation guidance for the TWG program. We have evaluated any potential effects on federally-recognized Indian tribes and have determined that there are no potential adverse effects. This guidance expands tribal participation in Service programs and allows for opportunities for tribal wildlife management and conservation initiatives across Indian Country. We will continue to consult with tribal governments and tribal entities throughout the comment period, as a part of the rulemaking process, and beyond in furthering our mutual goals for the TWG program.

K. Paperwork Reduction Act (44 U.S.C. 3501)

The information collection requirements of this program will be largely met through the Federal Aid Grants Application Booklet. Federal Aid has applied for OMB approval under Control Number 1018–1019. This approval applies to grants managed by the Division of Federal Aid, even if for other Divisions of the Service. We are collecting this information relevant to the eligibility, substantiality, relative value, and budget information from applicants in order to make awards of grants under these programs. We are collecting financial and performance information to track costs and accomplishments of these grant programs. Completion of these application and reporting requirements will involve a paperwork burden of approximately 80 hours per grant proposal. This does not include any burden hours previously approved by OMB for standard or Fish and Wildlife Service forms. Your response to this information collection is required to receive benefits in the form of a grant, and does not carry any premise of confidentiality. An agency may not conduct or sponsor, and a person is not required to respond to, a collection of information unless it displays a currently valid OMB control number. With respect to this 80 hour per application increase in burden hours, interested parties should contact the Information Collection Clearance Officer listed in the **ADDRESSES** section of this document.

IV. Native American Liaisons for the Fish and Wildlife Service

Regional correspondence and telephone contacts for the Service for this proposed implementation guidance and other appropriate purposes are as follows:

Region 1—Hawaii, Idaho, Oregon, Washington, Nevada, and California

Native American Liaison, U.S. Fish and Wildlife Service, 911 NE. 11th Avenue, Portland, Oregon 97232–4181, TWG Contact: Scott Aiken (503) 231–6121.

Region 2—Arizona, New Mexico, Oklahoma, and Texas

Native American Liaison, U.S. Fish and Wildlife Service, 500 Gold Avenue, SW., Albuquerque, New Mexico 87103, TWG Contact: John Antonio (505) 248–6810.

Region 3—Illinois, Indiana, Iowa, Michigan, Minnesota, Missouri, Ohio, and Wisconsin

Native American Liaison, U.S. Fish and Wildlife Service, One Federal Drive, Fort Snelling, Minnesota, TWG Contact: John Leonard (612) 713–5108.

Region 4—Alabama, Arkansas, Florida, Georgia, Kentucky, Louisiana, Mississippi, North Carolina, South Carolina, and Tennessee

Native American Liaison, U.S. Fish and Wildlife Service, 1875 Century Boulevard, Suite 410, Atlanta, Georgia 30345, TWG Contact: Jim Brown (404) 679–7125.

Region 5—Connecticut, Delaware, District of Columbia, Maine, Maryland, Massachusetts, New Hampshire, New Jersey, New York, Pennsylvania, Rhode Island, Vermont, Virginia, and West Virginia

Native American Liaison, U.S. Fish and Wildlife Service, 300 Westgate Center Drive, Hadley, Massachusetts 01035–9589, TWG Contact: D.J. Monette (413) 253–8662 or (609) 646–9310.

Region 6—Colorado, Kansas, Montana, Nebraska, North Dakota, South Dakota, Utah, and Wyoming

Native American Liaison, U.S. Fish and Wildlife Service, PO Box 25486—Denver Federal Center, Denver, Colorado 80225–0486, TWG Contact: David Redhorse (303) 236–7905 x253.

Region 7—Alaska

Native American Liaison, U.S. Fish and Wildlife Service, 1011 East Tudor Road, Anchorage, Alaska 99503–6199, TWG Contact: Tony DeGange (907) 786–3492.

Dated: October 1, 2002.

Paul Hoffman,

Acting Assistant Secretary, Fish and Wildlife and Parks.

[FR Doc. 02–32700 Filed 12–26–02; 8:45 am]

BILLING CODE 4310–55–P

DEPARTMENT OF THE INTERIOR

Bureau of Land Management

[CO–600–03–1010–BN–241A]

Notice of Public Meetings, Southwest Colorado and Northwest Colorado Resource Advisory Council Meetings

AGENCY: Bureau of Land Management, DOI.

ACTION: Notice of public meetings.

SUMMARY: In accordance with the Federal Land Policy and Management Act (FLPMA) and the Federal Advisory Committee Act of 1972 (FACA), the U.S. Department of the Interior, Bureau of Land Management (BLM), Southwest Colorado Resource Advisory Council (RAC) and Northwest Colorado RAC will meet as indicated below.

The Southwest Colorado RAC meetings will be held February 7, 2003 at the Bureau of Land Management, Western Slope Center Office located at 2465 South Townsend in Montrose, Colorado; April 11, 2003 at the Center of Southwest Colorado—Ft. Lewis College located at 1000 Rim Drive in Durango, Colorado; June 27, 2003 at the Paonia Community Center located at 214 Grand in Paonia, Colorado; and August 8, 2003 at the Land Use Dept. Conference Room located at 110 Mall Road in Ridgway, Colorado.

The Northwest Colorado RAC meeting will be held February 21, 2003 at the Holiday Inn located at 755 Horizon Drive in Grand Junction, Colorado.

Both the Southwest and Northwest Colorado RAC meetings will begin at 9 a.m. and adjourn at approximately 4 p.m. Public comment periods at the meetings will be in the morning at 9:30 a.m. and in the afternoon, to start no later than 3 p.m.

DATES: Southwest Colorado RAC meetings are February 7, 2003, April 11, 2003, June 27, 2003, and August 8, 2003; Northwest Colorado RAC meeting is February 21, 2003.

FOR FURTHER INFORMATION CONTACT: Larry J. Porter, RAC Coordinator, Bureau of Land Management, 2815 H Road, Grand Junction, Colorado 81506; Telephone (970) 244–3012.

SUPPLEMENTARY INFORMATION: The Southwest and Northwest Colorado RACs advise the Secretary of the Interior, through the Bureau of Land Management, on a variety of planning and management issues associated with public land management in Colorado.

Purpose of the Southwest Colorado RAC February 7, 2003 meeting is to consider several resource management related topics including: RAC Goals and Priorities, Coal Bed Methane Development, Gunnison Gourge National Conservation Area planning update, and Canyon of the Ancients National Monument management update. Topics of discussion for the following Southwest Colorado RAC meetings scheduled for April 11, 2003, June 27, 2003, and August 8, 2003 will include drought issues, fire management, land use planning, weeds management, travel management, Native American consultation, wilderness, wild horse program update, land

exchange proposals, cultural resources, and other issues as appropriate.

Purpose of the Northwest Colorado RAC February 21, 2003 meeting is to consider several resource management related topics including RAC Goals and Priorities, Moffat County Pilot Project update, Committee reports and/or actions, Standards for Public Land Health update, and Field Office Managers' and Staff presentations.

These Northwest and Southwest Colorado RAC meetings are open to the public. The public may present written comments to the RACs. Each RAC meeting will also have time, as identified above, allocated for hearing public comments. Depending on the number of persons wishing to comment and time available, the time for individual oral comments may be limited. Individuals planning to attend the meetings who need special assistance should contact the RAC Coordinator listed above.

Dated: December 20, 2002.

Larry Porter,

Acting Western Slope Center Manager.

[FR Doc. 02–32683 Filed 12–26–02; 8:45 am]

BILLING CODE 4310–JB–P

DEPARTMENT OF THE INTERIOR

Bureau of Land Management

[AZ–910–0777–26–241A]

State of Arizona Resource Advisory Council Meeting

AGENCY: Bureau of Land Management, Interior.

ACTION: Arizona Resource Advisory Council Meeting notice.

SUMMARY: This notice announces a meeting of the Arizona Resource Advisory Council (RAC).

The business meeting will be held on January 27, 2003, at the Crowe Plaza, 2532 W. Peoria Avenue in Phoenix, Arizona. It will begin at 9:30 a.m. and conclude at 4 p.m. The agenda items to be covered include: review of the October 3, and November 20, 2002 meeting minutes; BLM State Director's Update on Statewide Issues; Briefing on three-issues (Burro-Herd Management Area, Palamarita Burro Gather, and Range Allotment Monitoring) requested by the Mohave Livestock Association; Update on Land Use Planning Efforts. Update on the Southwest Strategy, RAC Questions on Written Reports from BLM Field Office Managers; Update Proposed Field Office Rangeland Resource Teams, Reports by the Standards and Guidelines, Recreation, Public Relations, Land Use Planning, Wild Horse and Burro Working Groups; Reports from RAC members; and Discussion of future meetings. A public comment period will be provided at 11:30 a.m. on January 27, for any interested publics who wish to address the Council.

FOR FURTHER INFORMATION CONTACT: Deborah Stevens, Bureau of Land Management, Arizona State Office, 222 North Central Avenue, Phoenix, Arizona 85004–2203, (602) 417–9215.

Elaine Y. Zielinski,

Arizona State Director.

[FR Doc. 02–32702 Filed 12–26–02; 8:45 am]

BILLING CODE 4310–32–M

DEPARTMENT OF THE INTERIOR

Bureau of Land Management

[MTM 90527/IDI 33690]

Public Land Order No. 7549; Withdrawal of National Forest System Land to Preserve Lemhi Pass National Historic Landmark; Montana and Idaho

AGENCY: Bureau of Land Management, Interior.

ACTION: Public land order.

SUMMARY: This order withdraws 1,328.84 acres of National Forest System land from mining for a period of 20 years to preserve the unique resources of Lemhi Pass National Historic Landmark. The land has been and will remain open to such forms of disposition as may by law be made of National Forest System land and to mineral leasing. An additional 176.45 acres would become subject to the terms and conditions of this withdrawal upon acquisition of the mineral estate by the United States.

EFFECTIVE DATE: December 27, 2002.

FOR FURTHER INFORMATION CONTACT: Katie Bump, Project Coordinator, Beaverhead-Deerlodge National Forest, 420 Barrett Street, Dillon, Montana 59725–3572, 406–683–3955.

Order

By virtue of the authority vested in the Secretary of the Interior by section 204 of the Federal Land Policy and Management Act of 1976, 43 U.S.C. 1714 (1994), it is ordered as follows:

1. Subject to valid existing rights, the following described National Forest System land is hereby withdrawn from location or entry under the United States mining laws (30 U.S.C. Ch. 2 (1994)), to preserve the unique resources of Lemhi Pass National Historic Landmark:

(a) *Beaverhead-Deerlodge National Forest*

Principal Meridian, Montana,

T. 10 S., R. 15 W.,
Sec. 9, lots 1 to 4, inclusive, and E½E½;

The area described contains 285.71 acres in Beaverhead County.

(b) *Salmon-Challis National Forest*

Boise Meridian, Idaho,

T. 19 N., R. 25 E.,
Sec. 10, S½SE¼;
Sec. 11, lot 4, S½SW¼, and SW¼SE¼;
Sec. 14, lots 1 to 5, inclusive, lots 7 and 8, NW¼, and W½E½;
Sec. 15, NE¼ and N½SE¼.

The area described contains 1,043.13 acres in Lemhi County.

The areas described in (a) and (b) above aggregate 1,328.84 acres.

2. The following described land, which is located within the boundary of the Lemhi Pass National Historic Landmark, would become subject to the terms and conditions of this withdrawal upon acquisition of the mineral estate by the United States:

Beaverhead-Deerlodge National Forest

Principal Meridian, Montana,

T. 10 S., R. 15 W.,
Sec. 16, lots 1 and 2, and E½NE¼.

The area described contains 176.45 acres in Beaverhead County.

3. The withdrawal made by this order does not alter the applicability of those public land laws governing the use of National Forest System lands under lease, license, or permit, or governing the disposal of their mineral or vegetative resources other than under the mining laws.

4. This withdrawal will expire 20 years from the effective date of this order unless, as a result of a review conducted before the expiration date pursuant to section 204(f) of the Federal Land Policy and Management Act of 1976, 43 U.S.C. 1714(f) (1994), the Secretary determines that the withdrawal shall be extended.

Dated: December 10, 2002.

Rebecca W. Watson,

Assistant Secretary—Land and Minerals Management.

[FR Doc. 02–32800 Filed 12–26–02; 8:45 am]

BILLING CODE 3410–11–P

DEPARTMENT OF THE INTERIOR

Bureau of Land Management

[WY–957–02–1420–BJ]

Survey Plat Filings; Wyoming

AGENCY: Bureau of Land Management, Interior.

ACTION: Notice of filing of plats of survey, Wyoming.

SUMMARY: The Bureau of Land Management (BLM) has filed the plats of survey of the lands described below in the BLM Wyoming State Office, Cheyenne, Wyoming, on November 14, 2002.

FOR FURTHER INFORMATION CONTACT: Bureau of Land Management, 5353 Yellowstone Road, PO Box 1828, Cheyenne, Wyoming 82003.

SUPPLEMENTARY INFORMATION: These surveys were executed at the request of the Bureau of Land Management, and are necessary for the management of resources. The lands surveyed are:

The plat representing the dependent resurvey of a portion of the east boundary, and a portion of the subdivisional lines, and the subdivision of certain sections, Township 27 North, Range 85 West, Sixth Principal Meridian, Wyoming, was accepted November 14, 2002.

The plat representing the dependent resurvey of portion of the Seventh Standard Parallel North, through Ranges 84 and 85 West, a portion of the east boundary, and a portion of the subdivisional lines, and the subdivision of certain sections, Township 28 North, Range 85 West, Sixth Principal Meridian, Wyoming, was accepted November 14, 2002.

The plat representing the dependent resurvey of a portion of the subdivisional lines, and the subdivision of section 12, Township 29 North, Range 86 West, Sixth Principal Meridian, Wyoming, was accepted November 14, 2002.

The plat representing the dependent resurvey of a portion of the east boundary, and a portion of the subdivisional lines, and the subdivision of section 25, Township 30 North, Range 86 West, Sixth Principal Meridian, Wyoming, was accepted November 14, 2002.

Copies of the preceding described plats are available to the public.

Dated: December 20, 2002.

John P. Lee,

Chief Cadastral Surveyor, Division of Support Services.

[FR Doc. 02–32682 Filed 12–26–02; 8:45 am]

BILLING CODE 4310–22–P

DEPARTMENT OF THE INTERIOR

Minerals Management Service

Agency Information Collection Activities: Proposed Collection, Comment Request

AGENCY: Minerals Management Service (MMS), Interior.

ACTION: Notice of extension of a currently approved information collection (OMB Control Number 1010–0126).

SUMMARY: To comply with the Paperwork Reduction Act (PRA) of 1995, we are inviting comments on a collection of information we will submit to the Office of Management and Budget (OMB) for review and approval. The information collection request (ICR) is titled ''Royalty-in-Kind (RIK) Pilot Program—Directed Communications by Operators of Federal Oil and Gas Leases.''

DATES: Submit written comments on or before February 25, 2003.

ADDRESSES: Submit written comments to Sharron L. Gebhardt, Regulatory Specialist, Minerals Management Service, Minerals Revenue Management, P.O. Box 25165, MS320B2, Denver, Colorado 80225. If you use an overnight courier service, our courier address is Building 85, Room A–614, Denver Federal Center, Denver, Colorado 80225. You may also e-mail your comments to us at *mrm.comments@mms.gov.* Include the title of the information collection and the OMB control number in the ''Attention'' line of your comment. Also include your name and return address. Submit electronic comments as an ASCII file avoiding the use of special characters and any form of encryption. If you do not receive a confirmation we have received your e-mail, contact Ms. Gebhardt at (303) 231–3211.

FOR FURTHER INFORMATION CONTACT: Sharron L. Gebhardt, telephone (303) 231–3211, FAX (303) 231–3385, or e-mail *sharron.gebhardt@mms.gov.*

SUPPLEMENTARY INFORMATION: *Title:* ''Royalty-in-Kind (RIK) Pilot Program—Directed Communications by Operators of Federal Oil and Gas Leases.''

OMB Control Number: 1010–0126.

Abstract: The Department of the Interior (DOI) is responsible for matters relevant to mineral resource development on Federal and Indian Lands and the Outer Continental Shelf (OCS). The Secretary of the Interior (Secretary) under the Mineral Leasing Act (30 U.S.C. 192) and the OCS Lands Act (43 U.S.C. 1353) is responsible for managing the production of minerals from Federal and Indian lands and the OCS; collecting royalties from lessees who produce minerals; and distributing the funds collected in accordance with applicable laws. MMS performs the royalty management functions for the Secretary.

Most royalties are now paid in value. For example, when a company or individual enters into a contract to develop, produce, and dispose of minerals from Federal lands, that company or individual agrees to pay the United States a share (royalty) of the full value received for the minerals taken from leased lands. MMS has undertaken several pilot programs to study the feasibility of taking the Government's royalty in the form of production, that is, as RIK.

Collection of RIK requires communication between MMS and the operators of a lease to assure accurate and timely delivery of MMS's royalty share of production volumes.

MMS, as responsible steward of oil and gas royalties, must direct operators of affected MMS leases to carry out three types of communication to take MMS's RIK crude oil or natural gas. The types of information that operators must provide are as follows:

(1) About 8–10 days before end of the month, report initial information about the projected volumes and qualities of RIK production the operator expects to make available in the next month, and corrections to those projected volumes and qualities for the month, submitted at varying frequencies during the month;

(2) When needed, report billing information about transportation/billing arrangements for the RIK to the delivery point, and

(3) Report month-end summary information (lease imbalance statement) about total RIK volumes and qualities needed to carry over to the next month to resolve aggregated imbalances that have incurred in prior months of RIK deliveries.

Experience with the Wyoming and Texas 8(g) Pilots demonstrate directed communication requirements differed according to the needs of each pilot situation. For example, in the Wyoming Pilot, RIK was delivered to the purchasers at the lease. Therefore, the direction to make transportation arrangements was included in ''Dear Operator'' letters issued to those operators. For these reasons, we are not requesting OMB approval of specific ''Dear Operator'' letters to operators but, instead, requesting OMB approval to continue collecting the three kinds of reporting requirements concerning communications between operators and

MMS. By obtaining continued approval for these three kinds of reporting requirements, MMS will be able to select the types of directed communications needed for each situation and include only those types in a ''Dear Operator'' letter appropriate to the operation.

The types of communication and the supporting data MMS will require operators to use in setting up the monthly delivery of RIK to the purchaser are standard business practices in the oil and gas industry. The information in the directed communication is essential to the delivery and acceptance of verifiable quantities and qualities of oil and gas and is exchanged as a normal part of the conduct of those business activities, even when the operators are not directed to do so.

In addition, due to their similarity, we are merging this ICR with OMB Control Number 1010–0130, Directed Communications between Operators of Federal RIK Leases and Deliverers of Equivalent Oil Production to the Strategic Petroleum Reserve (SPR).

On February 11, 1999, DOI announced that it would assist in an initiative to refill the SPR. This initiative involved collecting RIK oil production from Federal lessees in the Gulf of Mexico and transferring it to the Department of Energy (DOE). DOE issued contracts to companies to take Federal RIK crude oil delivered by MMS's operators and, in exchange, to deliver to DOE's SPR an equivalent volume and quality of crude oil. DOE was projected to use 28 million barrels of RIK oil to refill the SPR.

On November 6, 2001, President Bush announced an initiative to refill the SPR. MMS, in coordination with DOE, entered into a joint, 3-year initiative to fill the remaining capacity of the SPR. Operators of Federal leases in the Gulf of Mexico will deliver MMS's royalty oil to MMS's exchange partner at or near the lease. MMS's exchange partner will then deliver similar quantities of crude oil to MMS or its designated agent at Gulf Coast market centers. MMS's designated agent will be either DOE or its exchange contractor. DOE will then contract for the exchange or direct movement of exchange oil to the SPR.

MMS, as responsible steward of oil royalties, must direct operators of affected MMS leases to carry out three types of communication with MMS. The types of information operators must provide are as stated previously.

These types of information are necessary so that DOE's exchange contractors can arrange to timely accept accurate amounts and qualities of royalty oil that will be delivered by MMS's exchange partner and for MMS to verify timely fulfillment of operators' and lessees' royalty obligations to the Federal Government.

MMS received OMB approval for the three types of communications between MMS operators and MMS rather than approval of a single ''Dear Operator'' letter directing these communications. By obtaining approval for these kinds of reporting requirements, MMS is able to draft situation-specific ''Dear Operator'' letters—that is, letters addressing only the types of directed communications and other issues relevant to the specific situation.

No proprietary information will be submitted to MMS under this collection. No items of a sensitive nature are collected. The requirement to respond is mandatory.

Frequency of Response: Intra-monthly (variable).

Estimated Number and Description of Respondents: 145 lessees or operators of Federal oil and gas leases participating in RIK.

Estimated Annual Reporting and Recordkeeping ''Hour'' Burden: 4,050 hours.

The following chart shows the breakdown of the estimated burden hours:

RIK pilot programs	Reporting requirement	Burden hours per response	Annual number of responses	Annual burden hours
Wyoming Oil	Intra-monthly (variable)	1	100	100
Natural Gas (Texas 8G and GOM)	Intra-monthly (variable)	1	3,600	3,600
GOM Oil	Intra-monthly (variable)	1	50	50
SPR Fill Initiative	Intra-monthly (variable)	1	300	300
Total			4,050	4,050

Estimated Annual Reporting and Record keeping ''Non-Hour Cost'' Burden: We have identified no cost burdens for this collection.

Comments: The PRA (44 U.S.C. 3501, *et seq.*) provides that an agency may not conduct or sponsor, and a person is not required to respond to, a collection of information unless it displays a currently valid OMB control number. Before submitting an ICR to OMB, PRA Section 3506(c)(2)(A) requires each agency ''* * * to provide notice * * * and otherwise consult with members of the public and affected agencies concerning each proposed collection of information * * *. Agencies must specifically solicit comments to: (a) Evaluate whether the proposed collection of information is necessary for the agency to perform its duties, including whether the information is useful; (b) evaluate the accuracy of the agency's estimate of the burden of the proposed collection of information; (c) enhance the quality, usefulness, and clarity of the information to be collected; and (d) minimize the burden on the respondents, including the use of automated collection techniques or other forms of information technology.

The PRA also requires agencies to estimate the total annual reporting ''non-hour cost'' burden to respondents or recordkeepers resulting from the collection of information. We have not identified non-hour cost burdens for this information collection. If you have costs to generate, maintain, and disclose this information, you should comment and provide your total capital and startup cost components or annual operation, maintenance, and purchase of service components. You should describe the methods you use to estimate major cost factors, including system and technology acquisition, expected useful life of capital equipment, discount rate(s), and the period over which you incur costs. Capital and startup costs include, among other items, computers and software you purchase to prepare for collecting information; monitoring, sampling, testing equipment; and record storage facilities. Generally, your estimates should not include equipment or services purchased: (i) Before October 1, 1995; (ii) to comply with requirements not associated with the information collection; (iii) for reasons other than to provide information or keep records for the Government; or (iv) as part of customary and usual business or private practices.

We will summarize written responses to this notice and address them in our ICR submission for OMB approval, including appropriate adjustments to the estimated burden. We will provide a copy of the ICR to you without charge upon request and the ICR will also be posted on our Web site at *http://www.mrm.mms.gov/Laws_R_D/FRNotices/FRInfColl.htm.*

Public Comment Policy: We will post all comments in response to this notice on our Web site at *http://www.mrm.mms.gov/Laws_R_D/FRNotices/FRInfColl.htm.* We will also make copies of the comments available for public review, including names and addresses of respondents, during regular business hours at our offices in Lakewood, Colorado. Individual respondents may request we withhold their home address from the public record, which we will honor to the extent allowable by law. There also may be circumstances in which we would withhold from the rulemaking record a respondent's identity, as allowable by law. If you request that we withhold your name and/or address, state this prominently at the beginning of your comment. However, we will not consider anonymous comments. We will make all submissions from organizations or businesses, and from individuals identifying themselves as representatives or officials of organizations or businesses, available for public inspection in their entirety.

MMS Information Collection Clearance Officer: Jo Ann Lauterbach, (202) 208–7744.

Dated: December 20, 2002.

Cathy J. Hamilton,

Acting Associate Director for Minerals Revenue Management.

[FR Doc. 02–32623 Filed 12–26–02; 8:45 am]

BILLING CODE 4310–MR–P

DEPARTMENT OF THE INTERIOR

Bureau of Reclamation

Agency Information Collection; Proposed Revisions to a Currently Approved Information Collection; Comment Request

AGENCY: Bureau of Reclamation, Interior.

ACTION: Notice of renewal of a currently approved collection (OMB No. 1006–0005).

SUMMARY: In accordance with the Paperwork Reduction Act of 1995 (44 U.S.C. 3501 et seq.), the Bureau of Reclamation (we, our, or us) intends to submit a request for renewal (with revisions) of an existing approved information collection to the Office of Management and Budget (OMB): Individual Landholder's and Farm Operator's Certification and Reporting Forms for Acreage Limitation, 43 CFR part 426 and 43 CFR part 428, OMB Control Number: 1006–0005. This information collection is required under the Reclamation Reform Act of 1982 (RRA), Acreage Limitation Rules and Regulations, 43 CFR part 426, and Information Requirements for Certain Farm Operations In Excess of 960 Acres and the Eligibility of Certain Formerly Excess Land, 43 CFR part 428. We request your comments on the revised RRA forms and specific aspects of the information collection.

DATES: Your written comments must be received on or before February 25, 2003.

ADDRESSES: You may send written comments to the Bureau of Reclamation, Attention: D–5200, PO Box 25007, Denver, CO 80225–0007. You may request copies of the proposed revised forms by writing to the above address or by contacting Stephanie McPhee at (303) 445–2897.

FOR FURTHER INFORMATION CONTACT: Stephanie McPhee at: (303) 445–2897.

SUPPLEMENTARY INFORMATION: *Changes to the RRA forms and the instructions to those forms.*

We made a few editorial changes to the currently approved RRA forms and the instructions to those forms that are designed to assist the respondents by increasing their understanding of the forms, clarifying the instructions for use when completing the forms, and clarifying the information that is required to be submitted to the districts with the forms. The proposed revisions to the RRA forms will be included starting in the 2004 water year.

In response to landholding situations that have arisen in certain districts that are subject to the acreage limitation provisions where a public entity owns or leases land through a legal entity, a new ''Attachment Sheet for Form 7–21PE'' (Form 7–21PE–IND) has been developed for approval as part of this information collection. In lieu of modifying the ''Declaration of Public Entities Landholdings'' (Form 7–21PE) to address the rare instances where a public entity indirectly owns or leases land, the one-page Form 7–21PE–IND will be completed in conjunction with the Form 7–21PE. There is no increase in burden hours resulting from the addition of this form because (1) the occurrence of public entities that indirectly hold land is isolated at best, and (2) this information is currently required from the applicable public entities on a separate sheet of paper. Therefore, the burden hours applicable to Form 7–21PE–IND are included in those listed below for Form 7–21PE. The development of Form 7–21PE–IND provides a consistent format in which to gather information that is currently required.

Title: Individual Landholder's and Farm Operator's Certification and Reporting Forms for Acreage Limitation, 43 CFR part 426 and 43 CFR part 428.

Abstract: This information collection requires certain landholders (direct or indirect landowners or lessees) and farm operators to complete forms demonstrating their compliance with the acreage limitation provisions of Federal reclamation law. These forms are submitted to districts who use the information to establish each landholder's status with respect to landownership limitations, full-cost pricing thresholds, lease requirements, and other provisions of Federal reclamation law. In addition, forms are submitted by certain farm operators to provide information concerning the services they provide and the nature of their farm operating arrangements. All landholders whose entire westwide landholdings total 40 acres or less are exempt from the requirement to submit RRA forms. Landholders who are ''qualified recipients'' have RRA forms submittal thresholds of 80 acres or 240 acres depending on the district's RRA forms submittal threshold category where the land is held. Only farm operators who provide multiple services to more than 960 acres held in trusts or by legal entities are required to submit forms.

Frequency: Annually.

Respondents: Landholders and farm operators of certain lands in our projects, whose landholdings exceed specified RRA forms submittal thresholds.

Estimated Total Number of Respondents: 19,202.

Estimated Number of Responses per Respondent: 1.02.

Estimated Total Number of Annual Responses: 19,586.

Estimated Total Annual Burden on Respondents: 14,829 hours.

Estimate of Burden for Each Form:

Form No.	Burden estimate per form (in minutes)	Number of respondents	Annual number of responses	Annual burden on respondents (in hours)
Form 7–2180	60	5,358	5,465	5,465
Form 7–2180EZ	45	537	548	411
Form 7–2181	78	1,758	1,793	2,331
Form 7–2184	45	40	41	31
Form 7–2190	60	1,910	1,948	1,948
Form 7–2190EZ	45	113	115	86
Form 7–2191	78	891	909	1,182
Form 7–2194	45	4	4	3
Form 7–21PE	66	205	209	230
Form 7–21TRUST	60	1,331	1,358	1,358
Form 7–21VERIFY	12	6,452	6,581	1,316
Form 7–21FC	30	243	248	124
Form 7–21XS	30	164	167	84
Form 7–21FARMOP	78	196	200	260

Comments.

Comments are invited on:

(a) Whether the proposed collection of information is necessary for the proper performance of our functions, including whether the information will have practical use;

(b) The accuracy of our burden estimate for the proposed collection of information;

(c) Ways to enhance the quality, usefulness, and clarity of the information to be collected; and

(d) Ways to minimize the burden of the collection of information on respondents, including the use of automated collection techniques or other forms of information technology.

We will summarize all comments received regarding this notice. We will publish that summary in the **Federal Register** when the information collection request is submitted to OMB for review and approval.

Department of the Interior practice is to make comments, including names and home addresses of respondents, available for public review. Individual respondents may request that we withhold their home address from public disclosure, which we will honor to the extent allowable by law. There also may be circumstances in which we would withhold a respondent's identity from public disclosure, as allowable by law. If you wish us to withhold your name and/or address, you must state this prominently at the beginning of your comment. We will make all submissions from organizations or businesses, and from individuals identifying themselves as representatives or officials of organizations or businesses, available for public disclosure in their entirety.

Dated: December 10, 2002.

Elizabeth Cordova-Harrison,

Deputy Director, Office of Policy.

[FR Doc. 02–32666 Filed 12–26–02; 8:45 am]

BILLING CODE 4310–MN–M

DEPARTMENT OF THE INTERIOR

Bureau of Reclamation

Agency Information Collection Activities; Proposed Revisions to a Currently Approved Information Collection; Comment Request

AGENCY: Bureau of Reclamation, Interior.

ACTION: Notice of renewal of a currently approved collection (OMB No. 1006–0023).

SUMMARY: In accordance with the Paperwork Reduction Act of 1995 (44 U.S.C. 3501 *et seq.*), the Bureau of Reclamation (we, our, or us) intends to submit a request for renewal (with revisions) of an existing approved information collection to the Office of Management and Budget (OMB): Limited Recipient Identification Sheet, Trust Information Sheet for Acreage Limitation, 43 CFR part 426, OMB Control Number: 1006–0023. This information collection is required by provisions under the Reclamation Reform Act of 1982 (RRA) and Acreage Limitation Rules and Regulations, 43 CFR part 426. We request your comments on the proposed RRA forms and specific aspects of the information collection.

DATES: Your written comments must be received on or before February 25, 2003.

ADDRESSES: You may send written comments to the Bureau of Reclamation, Attention: D–5200, PO Box 25007, Denver, CO 80225–0007. You may request copies of the proposed forms by writing to the above address or by contacting Stephanie McPhee at: (303) 445–2897.

FOR FURTHER INFORMATION CONTACT: Stephanie McPhee at: (303) 445–2897.

SUPPLEMENTARY INFORMATION:

Title: Limited Recipient Identification Sheet, Trust Information Sheet for Acreage Limitation, 43 CFR part 426.

Abstract: Identification of limited recipients—Some entities that receive Reclamation irrigation water may believe themselves to be under the RRA forms submittal threshold and consequently, may not submit the appropriate RRA form(s). However, some of these entities may in fact have a different RRA forms submittal threshold than what they believe it to be due to the number of natural persons benefiting from each entity and the location of the land held by each entity. In addition, some entities that are exempt from the requirement to submit RRA forms due to the size of their landholdings (directly and indirectly owned and leased land) may in fact be receiving Reclamation irrigation water for which the full-cost rate must be paid because the start of Reclamation irrigation water deliveries occurred after October 1, 1981 [43 CFR 426.6(b)(2)]. The information obtained through completion of the Limited Recipient Identification Sheet allows us to establish entities' compliance with Federal reclamation law. The Limited Recipient Identification Sheet is disbursed at our discretion. The proposed revisions to the Limited Recipient Identification Sheet will be included starting in the 2004 water year, and are designed to facilitate ease of completion.

Trust review—We are required to review and approve all trusts [43 CFR part 426.7(b)(2)] in order to ensure trusts meet the regulatory criteria specified in 43 CFR part 426.7. Land held in trust generally will be attributed to the

beneficiaries of the trust rather than the trustee if the criteria are met. When we become aware of trusts with a relatively small landholding (40 acres or less), we may extend to those trusts the option to complete and submit for our review the Trust Information Sheet instead of actual trust documents. If we find nothing on the completed Trust Information Sheet that would warrant the further investigation of a particular trust, that trustee will not be burdened with submitting trust documents to us for in-depth review. The Trust Information Sheet is disbursed at our discretion. The proposed revisions to the Trust Information Sheet will be included starting in the 2004 water year, and are designed to facilitate ease of completion.

Frequency: Generally, these forms will be submitted once per identified entity or trust. Each year, we expect new responses in accordance with the following numbers.

Respondents: Entity landholders and trusts identified by Reclamation that are subject to the acreage limitation provisions of Federal reclamation law.

Estimated Total Number of Respondents: 1,105.

Estimated Number of Responses per Respondent: 1.0.

Estimated Total Number of Annual Responses: 1,105.

Estimated Total Annual Burden on Respondents: 92 hours.

Estimate of Burden for Each Form:

Form No.	Burden estimate per form (in minutes)	Number of respondents	Annual number of responses	Annual burden on respondents (in hours)
Limited Recipient Identification Sheet	5	635	635	53
Trust Information	5	470	470	39

Comments.

Comments are invited on:

(a) Whether the proposed new collection of information is necessary for the proper performance of our functions, including whether the information will have practical use;

(b) The accuracy of our burden estimate for the proposed new collection of information;

(c) Ways to enhance the quality, usefulness, and clarity of the information to be collected; and

(d) Ways to minimize the burden of the collection of information on respondents, including the use of automated collection techniques or other forms of information technology.

We will summarize all comments received regarding this notice. We will publish that summary in the **Federal Register** when the information collection request is submitted to OMB for review and approval.

Department of the Interior practice is to make comments, including names and home addresses of respondents, available for public review. Individual respondents may request that we withhold their home address from public disclosure, which we will honor to the extent allowable by law. There also may be circumstances in which we would withhold a respondent's identity from public disclosure, as allowable by law. If you wish us to withhold your name and/or address, you must state this prominently at the beginning of your comment. We will make all submissions from organizations or businesses, and from individuals identifying themselves as representatives or officials of organizations or businesses, available for public disclosure in their entirety.

Dated: December 10, 2002.

Elizabeth Cordova-Harrison,

Deputy Director, Office of Policy.

[FR Doc. 02–32667 Filed 12–26–02; 8:45 am]

BILLING CODE 4310–MN–P

DEPARTMENT OF THE INTERIOR

Bureau of Reclamation

Information Collection Activities; Request for Comments

AGENCY: Bureau of Reclamation, Interior.

ACTION: Notice and request for comments.

SUMMARY: The Bureau of Reclamation (Reclamation), as part of its continuing effort to reduce paperwork and respondent burdens, invites other Federal agencies, State, local, or tribal governments which manage recreation sites at Reclamation projects; concessionaires, subconcessionaires, and not-for-profit organizations who operate concessions on Reclamation lands; and the public, to comment on continuing information collection as required under the Paperwork Reduction Act of 1995 (44 U.S.C. Chapter 35). Currently, comments are being solicited about information Reclamation obtains to assess the relevance of recreation and concession activities at Reclamation projects.

DATES: Written comments must be received by the office listed in the addresses section on or before February 25, 2003.

ADDRESSES: Direct comments on the collection of recreation and concession information to: Bureau of Reclamation, Land, Recreation, and Cultural Resources Office, D–5300, Attention: Mr. Vernon Lovejoy, PO Box 25007, Denver, Colorado 80225–0007.

FOR FURTHER INFORMATION CONTACT: For additional information or a copy of the proposed Recreation Data Use Report forms, contact Mr. Lovejoy at the address provided above or by telephone at (303) 445–2913.

SUPPLEMENTARY INFORMATION: Reclamation collects Reclamation-wide recreation and concession information in support of existing public laws including the Federal Water Project Recreation Act (Pub. L. 89–72) and the Land and Water Conservation Fund Act (Pub. L. 88–578) and to fulfill reports to the President and the Congress. This collection of information allows Reclamation to meet the requirements of the Government Performance and Results Act (GPRA), financial reporting requirements, and pursue Reclamation's mission to manage, develop, and protect water and related resources in an environmentally and economically sound manner in the interest of the American people. Collection of Reclamation-wide recreation and concessionaire information supports specific information required by the Land and Water Conservation Fund Act and the Department of the Interior's GPRA-based strategic plan.

The two-part Recreation Use Data Report is an extension of a currently approved information collection with changes. Collected information will be used by Reclamation and its region and area offices to fulfill annual assessments and reporting requirements. Collected information will permit relevant program assessments of resources managed by Reclamation, its recreation managing partners, and/or concessionaires for the purpose of protecting the public interest and the

resources managed by Reclamation. In addition, the collection of information will fulfill congressional and financial reporting requirements.

Collection of Information

Title: Recreation Use Data Report.

Form No. 7–2534—Part 1, Managing Partners.

Form No. 7–2535—Part 2, Concessionaires.

OMB No.: OMB No. 1006–0002.

Type of Review: Recreation Use Data Report—extension of a currently approved information collection with change.

Abstract: Collect Reclamation-wide recreation and concession information in support of existing public laws, reporting requirements, and Reclamation's mission. The information will further Reclamation's ability to evaluate program and management effectiveness of existing recreation and concessionaire resources and facilities and validate effective public use of managed recreation resources, located on Reclamation project lands in the 17 Western States. Information collection primarily affects other Federal agencies, State, local or tribal governments or agencies who manage Reclamation's recreation resources and facilities; and for commercial concessions and nonprofit organizations located on reclamation lands with associated recreation services. A portion of the information collected may include individual or group users of these managed recreation resources or concessionaires.

Description of respondents: The information collection primarily affects other Federal agencies, State, local, or tribal governments, or agencies who manage Reclamation's recreation resources and facilities; and commercial concessions, subconcessionaires, and nonprofit organizations located on Reclamation lands with associated recreation services.

Frequency: Annually.

Form No. 7–2534, Managing Partners

Estimated completion time: 2 hours.

Annual responses: 310.

Annual burden hours: 620.

Form No. 7–2535, Concessionaires

Estimated completion time: 2 hours.

Annual responses: 225.

Annual burden hours: 450.

Comments are invited on: (a) Whether the proposed collection of information is necessary for the proper performance of the functions of Reclamation, including whether the information shall have practical use; (b) the accuracy of Reclamation's estimated burden of the proposed collection of information; (c) ways to enhance the quality, use, and clarity of the information to be collected; and (d) ways to minimize the burden of the collection of information on those who are to respond, including through the use of automated collection techniques or other forms of information technology.

Our practice is to make comments, including names and home addresses of respondents, available for public review. Individual respondents may request that we withhold their home address from public disclosure, which we will honor to the extent allowable by law. There also may be circumstances in which we would withhold a respondent's identity from public disclosure, as allowable by law. If you wish us to withhold your name and/or address, you must state this prominently at the beginning of your comment. We will make all submissions from organizations or businesses, and from individuals identifying themselves as representatives or officials of organizations or businesses, available for public disclosure in their entirety.

Dated: December 12, 2002.

Elizabeth Cordova-Harrison,

Deputy Director, Office of Policy.

[FR Doc. 02–32686 Filed 12–26–02; 8:45 am]

BILLING CODE 4310–MN–P

DEPARTMENT OF THE INTERIOR

Bureau of Reclamation

Agency Information Collection; Proposed Revisions to a Currently Approved Information Collection; Comment Request

AGENCY: Bureau of Reclamation, Interior.

ACTION: Notice of renewal of a currently approved collection (OMB No. 1006–0006).

SUMMARY: In accordance with the Paperwork Reduction Act of 1995 (44 U.S.C. 3501 *et seq.*), the Bureau of Reclamation (we, our, or us) intends to submit a request for renewal (with revisions) of an existing approved information collection to the Office of Management and Budget (OMB): Certification Summary Form, Reporting Summary Form for Acreage Limitation, 43 CFR part 426 and 43 CFR part 428, OMB Control Number: 1006–0006. This information collection is required under the Reclamation Reform Act of 1982 (RRA), Acreage Limitation Rules and Regulations, 43 CFR part 426, and Information Requirements for Certain Farm Operations In Excess of 960 Acres and the Eligibility of Certain Formerly Excess Land, 43 CFR part 428. We request your comments on the revised RRA forms and specific aspects of the information collection.

DATES: Your written comments must be received on or before February 25, 2003.

ADDRESSES: You may send written comments to the Bureau of Reclamation, Attention: D–5200, PO Box 25007, Denver, CO 80225–0007. You may request copies of the proposed revised forms by writing to the above address or by contacting Stephanie McPhee at: (303) 445–2897.

FOR FURTHER INFORMATION CONTACT: Stephanie McPhee at: (303) 445–2897.

SUPPLEMENTARY INFORMATION:

Changes to the RRA Forms and the Instructions to Those Forms

The changes made to the current Form 7–21SUMM–C, Form 7–21SUMM–R, and the corresponding instructions clarify the completion instructions for these forms (for example, how to number the pages of the tabulation sheets being submitted). Other changes to the forms and the corresponding instructions are editorial in nature and are designed to assist the respondents by increasing their understanding of the forms, and clarifying the instructions for use when completing the forms. The proposed revisions to the RRA forms will be effective in the 2004 water year.

Title: Certification Summary Form, Reporting Summary Form for Acreage Limitation, 43 CFR part 426 and 43 CFR part 428.

Abstract: These forms are to be used by district offices to summarize individual landholder (direct or indirect landowner or lessee) and farm operator certification and reporting forms as required by the RRA, 43 CFR part 426, and 43 CFR part 428. This information allows us to establish water user compliance with Federal reclamation law.

Frequency: Annually.

Respondents: Contracting entities that are subject to the acreage limitation provisions of Federal reclamation law.

Estimated Total Number of Respondents: 276.

Estimated Number of Responses per Respondent: 1.25.

Estimated Total Number of Annual Responses: 345.

Estimated Total Annual Burden on Respondents: 13,800 hours.

Estimate of Burden for Each Form:

Form No.	Burden estimate per form (in hours)	Number of respondents	Annual number of responses	Annual burden on respondents (in hours)
7–21SUMM–C and associated tabulation sheets	40	222	278	11,120
7–21SUMM–R and associated tabulation sheets	40	54	67	2,680

Comments

Comments are invited on:

(a) Whether the proposed collection of information is necessary for the proper performance of our functions, including whether the information will have practical use;

(b) The accuracy of our burden estimate for the proposed collection of information;

(c) Ways to enhance the quality, usefulness, and clarity of the information to be collected; and

(d) Ways to minimize the burden of the collection of information on respondents, including the use of automated collection techniques or other forms of information technology.

We will summarize all comments received regarding this notice. We will publish that summary in the **Federal Register** when the information collection request is submitted to OMB for review and approval.

Department of the Interior practice is to make comments, including names and home addresses of respondents, available for public review. Individual respondents may request that we withhold their home address from public disclosure, which we will honor to the extent allowable by law. There also may be circumstances in which we would withhold a respondent's identity from public disclosure, as allowable by law. If you wish us to withhold your name and/or address, you must state this prominently at the beginning of your comment. We will make all submissions from organizations or businesses, and from individuals identifying themselves as representatives or officials of organizations or businesses, available for public disclosure in their entirety.

Dated: December 10, 2002.

Elizabeth Cordova-Harrison,

Deputy Director, Office of Policy.

[FR Doc. 02–32687 Filed 12–26–02; 8:45 am]

BILLING CODE 4310–MN–P

INTERNATIONAL TRADE COMMISSION

[Investigation No. 701–TA–431 (Preliminary)]

Drams and Dram Modules From Korea

Determination

On the basis of the record [1] developed in the subject investigation, the United States International Trade Commission (Commission) determines,[2] pursuant to section 703(a) of the Tariff Act of 1930 (19 U.S.C. § 167b(a)) (the Act), that there is a reasonable indication that an industry in the United States is materially injured by reason of imports from Korea of dynamic random access memory semiconductors (DRAMs) and DRAM modules, provided for in subheading 8473.30.10 and 8542.21.80 of the Harmonized Tariff Schedule of the United States, that are alleged to be subsidized by the Government of Korea.

Pursuant to section 207.18 of the Commission's rules, the Commission also gives notice of the commencement of the final phase of its investigation. The Commission will issue a final phase notice of scheduling, which will be published in the **Federal Register** as provided in section 207.21 of the Commission's rules, upon notice from the Department of Commerce (Commerce) of an affirmative preliminary determination in the investigation under section 703(b) of the Act, or, if the preliminary determination is negative, upon notice of an affirmative final determination in that investigation under section 705(a) of the Act. Parties that field entries of appearance in the preliminary phase of the investigation need not enter a separate appearance for the final phase of the investigation. Industrial users, and, if the merchandise under investigation is sold at the retail level, representative consumer organizations have the right to appear as parties in Commission antidumping and countervailing duty investigation. The Secretary will prepare a public service list containing the names and addresses of all persons, or their representatives, who are parties to the investigation.

Background

On November 1, 2002, a petition was filed with the Commission and Commerce by Micron Technology, Inc., Boise, ID, alleging that an industry in the United States is materially injured or threatened with material injury by reason of subsidized imports of DRAMs and DRAM modules from Korea. Accordingly, effective November 1, 2002, the Commission instituted countervailing duty investigation No. 701–ATA–431 (Preliminary).

Notice of the institution of the Commission's investigation and of a public conference to be held in connection therewith was given by posting copies of the notice in the Office of the Secretary, U.S. International Trade Commission, Washington, DC, and by publishing the notice in the **Federal Register** of November 8, 2002 (67 FR 68176). The conference was held in Washington, DC, on November 22, 2002, and all persons who requested the opportunity were permitted to appear in person or by counsel.

The Commission transmitted its determination in this investigation to the Secretary of Commerce on December 16, 2002. The views of the Commission are contained in USITIC Publication 3569 (December 2002), entitled DRAMs and DRAM Models from Korea: Investigation No. 701–TA–431 (Preliminary).

Issued: December 20, 2002.

By order of the Commission.

Marilyn R. Abbott,

Secretary to the Commission.

[FR Doc. 02–32708 Filed 12–26–02; 8:45 am]

BILLING CODE 7020–02–P

[1] The record is defined in sec. 207.2(f) of the Commission's Rules of Practice and Procedure (19 CFR § 207.2(f)).

[2] Commissioner Marcia E. Miller has recused herself from this investigation.

INTERNATIONAL TRADE COMMISSION

[Inv. No. 337–TA–483]

Certain Tool Handles, Tool Holders, Tool Sets, and Components Therefor; Notice of Investigation

AGENCY: U.S. International Trade Commission.

ACTION: Institution of investigation pursuant to 19 U.S.C. 1337.

SUMMARY: Notice is hereby given that a complaint was filed with the U.S. International Trade Commission on November 26, 2002, under section 337 of the Tariff Act of 1930, as amended, 19 U.S.C. 1337, on behalf of Allen-Pal, LLC of San Jose and Los Gatos, California. Letters supplementing the complaint were filed on December 16, 17, and 20, 2002. The complaint as supplemented alleges violations of section 337 in the importation into the United States and the sale within the United States after importation of certain tool handles, tool holders, tool sets, and components therefor, by reason of infringement of claims 1, 2, 11, 12, 23, 24, and 28–30 of U.S. Patent No. 5,911,799 and claims 1, 14, 18, 19, 34, 37, 40, and 41 of U.S. Patent No. 6,311,587. The complaint further alleges that an industry in the United States exists as required by subsection (a)(2) of section 337.

The complainant requests that the Commission institute an investigation and, after the investigation, issue a permanent exclusion order and permanent cease and desist orders.

ADDRESSES: The complaint and supplements, except for any confidential information contained therein, are available for inspection during official business hours (8:45 a.m. to 5:15 p.m.) in the Office of the Secretary, U.S. International Trade Commission, 500 E Street, SW., Room 112, Washington, DC 20436, telephone 202–205–2000. Hearing impaired individuals are advised that information on this matter can be obtained by contacting the Commission's TDD terminal on 202–205–1810. Persons with mobility impairments who will need special assistance in gaining access to the Commission should contact the Office of the Secretary at 202–205–2000. General information concerning the Commission may also be obtained by accessing its Internet server at *http://www.usitc.gov.* The public record for this investigation may be viewed on the Commission's electronic docket (EDIS–ON–LINE) at *http://dockets.usitc.gov/eol/public.*

FOR FURTHER INFORMATION CONTACT: Juan Cockburn, Esq., Office of Unfair Import Investigations, U.S. International Trade Commission, telephone 202–205–2572.

Authority: The authority for institution of this investigation is contained in section 337 of the Tariff Act of 1930, as amended, and in section 210.10 of the Commission's Rules of Practice and Procedure, 19 C.F.R. § 210.10 (2002).

Scope of Investigation: Having considered the complaint, the U.S. International Trade Commission, on December 19, 2002, ordered that—

(1) Pursuant to subsection (b) of section 337 of the Tariff Act of 1930, as amended, an investigation be instituted to determine whether there is a violation of subsection (a)(1)(B) of section 337 in the importation into the United States, the sale for importation, or the sale within the United States after importation, of certain tool handles, tool holders, tool sets, or components therefor by reason of infringement of claims 1, 2, 11, 12, 23, 24, 28, 29, or 30 of U.S. Patent No. 5,911,799 or claims 1, 14, 18, 19, 34, 37, 40, or 41 of U.S. Patent No. 6,311,587, and whether an industry in the United States exists as required by subsection (a)(2) of section 337.

(2) For the purpose of the investigation so instituted, the following are hereby named as parties upon which this notice of investigation shall be served:

(a) The complainant is—Allen-Pal, LLC, 16780 Lark Avenue, Los Gatos, California 95032.

(b) The respondents are the following companies alleged to be in violation of section 337, and are the parties upon which the complaint is to be served: Danaher Corporation, 2099 Pennsylvania Avenue, NW., Washington, DC 20006, Danaher Tool Corporation, 11011 McCormick Road, Suite 150, Hunt Valley, Maryland 21031.

(c) Juan Cockburn, Esq., Office of Unfair Import Investigations, U.S. International Trade Commission, 500 E Street, SW., Suite 401, Washington, DC 20436, who shall be the Commission investigative attorney, party to this investigation; and

(3) For the investigation so instituted, the Honorable Paul J. Luckern is designated as the presiding administrative law judge.

Responses to the complaint and the notice of investigation must be submitted by the named respondents in accordance with section 210.13 of the Commission's rules of practice and procedure, 19 CFR 210.13. Pursuant to 19 CFR 201.16(d) and 210.13(a), such responses will be considered by the Commission if received no later than 20 days after the date of service by the Commission of the complaint and the notice of investigation. Extensions of time for submitting responses to the complaint will not be granted unless good cause therefor is shown. Failure of a respondent to file a timely response to each allegation in the complaint and in this notice may be deemed to constitute a waiver of the right to appear and contest the allegations of the complaint and to authorize the administrative law judge and the Commission, without further notice to that respondent, to find the facts to be as alleged in the complaint and this notice and to enter both an initial determination and a final determination containing such findings, and may result in the issuance of a limited exclusion order or a cease and desist order or both directed against that respondent.

Issued: December 23, 2002.

By order of the Commission.

Marilyn R. Abbott,

Secretary to the Commission.

[FR Doc. 02–32710 Filed 12–26–02; 8:45 am]

BILLING CODE 7020–02–P

INTERNATIONAL TRADE COMMISSION

[Inv. Nos. TA–131–24 and TA–2104–04]

U.S.-Australia Free Trade Agreement: Advice Concerning the Probable Economic Effect

AGENCY: International Trade Commission.

ACTION: Institution of investigation and scheduling of public hearing.

EFFECTIVE DATE: December 20, 2002.

SUMMARY: Following receipt of a request on December 6, 2002, from the United States Trade Representative (USTR), the Commission instituted investigation Nos. TA–131–24 and TA–2104–04, *U.S.-Australia Free Trade Agreement: Advice Concerning the Probable Economic Effect,* under section 131 of the Trade Act of 1974 and section 2104(b)(2) of the Trade Act of 2002.

FOR FURTHER INFORMATION CONTACT: Information specific to this investigation may be obtained from David Lundy, Project Leader (202–205–3439; *lundy@usitc.gov*), or Laura Polly, Deputy Project Leader (202–205–3408; *polly@usitc.gov*), Office of Industries, U.S. International Trade Commission, Washington, DC, 20436. For information on the legal aspects of this investigation, contact William Gearhart of the Office of the General Counsel (202–205–3091; *wgearhart@usitc.gov*). Hearing impaired individuals are advised that information on this matter can be obtained by contacting the TDD terminal on (202) 205–1810. General information concerning the Commission may also be obtained by accessing its internet server (*http://www.usitc.gov*). The public record for these investigations may be viewed on the Commission's electronic docket (EDIS–ON–LINE) at *http://dockets.usitc.gov/eol/public.*

Background: As requested by the USTR pursuant to section 131 of the Trade Act of 1974 (19 U.S.C. 2151), in its report the Commission will provide advice as to the probable economic effect of providing duty-free treatment for imports of products of Australia (i) on industries in the United States producing like or directly competitive products, and (ii) on consumers. The import analysis will consider each article in chapters 1 through 97 of the Harmonized Tariff Schedule of the United States for which U.S. tariffs will remain after the United States fully implements its Uruguay Round tariff commitments. The import advice will be based on the 2002 Harmonized Tariff System nomenclature and 2001 trade data. The advice with respect to the removal of U.S. duties on imports from Australia will assume that any known U.S. non-tariff barrier will not be applicable to such imports. The Commission will note in its report any instance in which the continued application of a U.S. non-tariff barrier to such imports would result in different advice with respect to the effect of the removal of the duty.

As also requested, pursuant to section 2104(b)(2) of the Trade Act of 2002 (19 U.S.C. 3804(b)(2)), the Commission will provide advice as to the probable economic effect of eliminating tariffs on imports of certain agricultural products of Australia on (i) industries in the United States producing the product concerned and (ii) the U.S. economy as a whole.

USTR indicated that the Commission's report will be classified and considered to be an inter-agency memorandum containing pre-decisional advice and subject to the deliberative process privilege. The Commission expects to provide its report to USTR by June 6, 2003.

Public Hearing: A public hearing in connection with this investigation will be held at the U.S. International Trade Commission Building, 500 E Street SW, Washington, DC, beginning at 9:30 a.m. on February 6, 2003. All persons shall have the right to appear, by counsel or in person, to present information and to be heard. Requests to appear at the public hearing should be filed with the Secretary, United States International Trade Commission, 500 E Street SW, Washington, DC 20436, no later than 5:15 p.m., January 21, 2003. Any prehearing briefs (original and 14 copies) should be filed not later than 5:15 p.m., January 23, 2003; the deadline for filing post-hearing briefs or statements is 5:15 p.m., February 13, 2003. In the event that, as of the close of business on January 21, 2003, no witnesses are scheduled to appear at the hearing, the hearing will be canceled. Any person interested in attending the hearing as an observer or non-participant may call the Secretary to the Commission (202–205–1806) after January 21, 2003, for information concerning whether the hearing will be held.

Written Submissions: In lieu of or in addition to participating in the hearing, interested parties are invited to submit written statements (original and 14 copies) concerning the matters to be addressed by the Commission in its report on this investigation. Commercial or financial information that a submitter desires the Commission to treat as confidential must be submitted on separate sheets of paper, each clearly marked ''Confidential Business Information'' at the top. All submissions requesting confidential treatment must conform with the requirements of section 201.6 of the Commission's Rules of Practice and Procedure (19 CFR 201.6). All written submissions, except for confidential business information, will be made available in the Office of the Secretary to the Commission for inspection by interested parties. The Commission may include such confidential business information in the report it sends to the USTR. To be assured of consideration by the Commission, written statements relating to the Commission's report should be submitted to the Commission at the earliest practical date and should be received no later than the close of business on February 13, 2003. All submissions should be addressed to the Secretary, United States International Trade Commission, 500 E Street SW, Washington, DC 20436. The Commission's rules do not authorize filing submissions with the Secretary by facsimile or electronic means. Persons with mobility impairments who will need special assistance in gaining access to the Commission should contact the Office of the Secretary at 202–205–2000. General information concerning the Commission may also be obtained by accessing its Internet server (*http://www.usitc.gov*).

List of Subjects

Australia, tariffs and imports.

By order of the Commission.

Issued: December 23, 2002.

Marilyn R. Abbott,

Secretary to the Commission.

[FR Doc. 02–32709 Filed 12–26–02; 8:45 am]

BILLING CODE 7020–02–P

DEPARTMENT OF JUSTICE

Antitrust Division

Notice Pursuant to the National Cooperative Research and Production Act of 1993—National Center for Manufacturing Sciences, Inc.

Notice is hereby given that, on December 3, 2002, pursuant to Section 6(a) of the National Cooperative Research and Production Act of 1993, 15 U.S.C. 4301 *et seq.* (''the Act''), the National Center for Manufacturing Sciences, Inc. (''NCMS'') has filed written notifications simultaneously with the Attorney General and the Federal Trade Commission disclosing changes in its membership status. The notifications were filed for the purpose of extending the Act's provisions limiting the recovery of antitrust plaintiffs to actual damages under specified circumstances. Specifically, Eclypse International Corporation, Corona, CA; General Lasertronics Corporation, San Jose CA; IMES, Inc., Norwell, MA; Pennsylvania State University, State College, PA; and the Aerostructures Corporation, Nashville, TN have been added as parties to this venture. Also, Concentus Technology Corporation, Dublin, OH has resigned or has had their membership in NCMS terminated.

No other changes have been made in either the membership or planned activity of the group research project. Membership in this group research project remains open, and NCMS intends to file additional written notification disclosing all changes in membership.

On February 20, 1987, NCMS filed its original notification pursuant to Section 6(a) of the Act. The Department of Justice published a notice in the **Federal Register** pursuant to Section 6(b) of the Act on March 17, 1987 (52 FR 8375).

The last notification was filed with the Department on August 28, 2002. A notice was published in the **Federal Register** pursuant to Section 6(b) of the Act on October 8, 2002 (67 FR 62816).

Constance K. Robinson,

Director of Operations Antitrust Division.

[FR Doc. 02–32635 Filed 12–26–02; 8:45 am]

BILLING CODE 4410–11–M

DEPARTMENT OF JUSTICE

Antitrust Division

Notice Pursuant to the National Cooperative Research and Production Act of 1993—PKI Forum, Inc.

Notice is hereby given that, on November 27, 2002, pursuant to Section 6(a) of the National Cooperative Research and Production Act of 1993, 15 U.S.C. 4301 *et seq.* (''the Act''), PKI Forum, Inc. has filed written notifications simultaneously with the Attorney General and the Federal Trade Commission disclosing changes in its membership status. The notifications were filed for the purpose of extending the Act's provisions limiting the recovery of antitrust plaintiffs to actual damages under specified circumstances. Specifically, Entrust Technologies, Addison, TX has been added as a party to this venture. Also, Seiko Instruments, Inc., Chiba, Japan, TRW, Inc., Cleveland, OH; e-Scotia, Toronto, Ontario, Canada; EEMA Worcester, United Kingdom; Neucom Corporation, Tokyo, Japan; Wells Fargo Bank, San Francisco, CA; Baltimore Technologies, Dublin 8, Ireland; RSA Security, Inc., Bedford, MA; FundServ, Toronto, Ontario, Canada; Fujitsu Limited, Yokohama, Japan; VeriSign, Inc., Mountain View, CA; Japan PKI Forum, Tokyo, Japan; GlaxoSmithKline, Philadelphia, PA; DataKey, Inc., Minneapolis, MN; Korea Information Security Agency, Seoul, Republic of Korea; Visa International, Foster City, CA; ICSA.net, Mechanicsburg, PA; Schlumberger Network Solutions, Houston, TX; KPMG LLP, Boston, MA; TeleTrustT Deutschland e.V, Erfurt, Germany; Canadian Payments Association, Ottawa, Ontario, Canada; Asia PKI Forum, Tokyo, Japan; Merck & Co., Inc., Whitehouse Station, NJ; Johnson & Johnson, New Brunswick, NJ; SSH Communications Security Corp., Helsinki, Finland; Computer Associates International, Inc., Herndon, VA; PKI Forum Singapore, Singapore, Singapore; Government of Canada PKI Secretariat, Ottawa, Ontario, Canada; Chunghwa Telecom Laboratories, Taoyuan, Taiwan; DOD/Federal PKI PMP, Ft. Meade, MD; Entrust Technologies, Addison, TX; and Mitsubishi Electric Corporation, Kanagawa, Japan have been dropped as parties to this venture.

No other changes have been made in either the membership or planned activity of the group research project. Membership in this group research project remains open, and PKI Forum, Inc. intends to file additional written notification disclosing all changes in membership.

On April 2, 2001, PKI Forum, Inc. filed its original notification pursuant to Section 6(a) of the Act. The Department of Justice published a notice in the **Federal Register** pursuant to Section 6(b) of the Act on May 3, 2001 (66 FR 22260).

The last notification was filed with the Department on September 5, 2002. A notice was published in the **Federal Register** pursuant to Section 6(b) of the Act on November 6, 2002 (67 FR 67649).

Constance K. Robinson,

Director of Operations, Antitrust Division.

[FR Doc. 02–32634 Filed 12–26–02; 8:45 am]

BILLING CODE 4410–11–M

DEPARTMENT OF LABOR

Employment Standards Administration; Wage and Hour Division

Minimum Wages for Federal and Federally Assisted Construction; General Wage Determination Decisions

General wage determination decisions of the Secretary of Labor are issued in accordance with applicable law and are based on the information obtained by the Department of Labor from its study of local wage conditions and data made available from other sources. They specify the basic hourly wage rates and fringe benefits which are determined to be prevailing for the described classes of laborers and mechanics employed on construction projects of a similar character and in the localities specified therein.

The determinations in these decisions of prevailing rates and fringe benefits have been made in accordance with 29 CFR part 1, by authority of the Secretary of Labor pursuant to the provisions of the Davis-Bacon Act of March 3, 1931, as amended (46 Stat. 1494, as amended, 40 U.S.C. 276a) and of other Federal statutes referred to in 29 CFR part 1, Appendix, as well as such additional statutes as may from time to time be enacted containing provisions for the payment of wages determined to be prevailing by the Secretary of Labor in accordance with the Davis-Bacon Act. The prevailing rates and fringe benefits determined in these decisions shall, in accordance with the provisions of the foregoing statutes, constitute the minimum wages payable on Federal and federally assisted construction projects to laborers and mechanics of the specified classes engaged on contract work of the character and in the localities described therein.

Good cause is hereby found for not utilizing notice and public comment procedure thereon prior to the issuance of these determinations as prescribed in 5 U.S.C. 553 and not providing for delay in the effective date as prescribed in that section, because the necessity to issue current construction industry wage determinations frequently and in large volume causes procedures to be impractical and contrary to the public interest.

Good cause is hereby found for not utilizing notice and public comment procedure thereon prior to the issuance of these determinations as prescribed in 5 U.S.C. 553 and not providing for delay in the effective date as prescribed in that section, because the necessity to issue current construction industry wage determinations frequently and in large volume causes procedures to be impractical and contrary tot he public interest.

General wage determination decisions, and modifications and supersedes decisions thereto, contain no expiration dates and are effective from their date of notice in the **Federal Register**, or on the date written notice is received by the agency, whichever is earlier. These decisions are to be used in accordance with the provisions of 29 CFR parts 1 and 5. Accordingly, the applicable decision, together with any modifications issued, must be made a part of every contract for performance of the described work within the geographic area indicated as required by an applicable Federal prevailing wage law and 29 CFR part 5. The wage rates and fringe benefits, notice of which is published herein, and which are contained in the Government Printing Office (GPO) document entitled ''General Wage Determinations Issued Under The Davis-Bacon And Related Acts,'' shall be the minimum paid by contractors and subcontractors to laborers and mechanics.

Any person, organization, or governmental agency having an interest in the rates determined as prevailing is encouraged to submit wage rate and fringe benefit information for consideration by the Department.

Further information and self-explanatory forms for the purpose of submitting this data may be obtained by writing to the U.S. Department of Labor, Employment Standards Administration, Wage and Hour Division, Division of Wage Determinations, 200 Constitution Avenue, NW., Room S–3014, Washington, DC 20210.

Modification to General Wage Determination Decisions

The number of the decisions listed to the Government Printing Office document entitled ''General Wage Determinations Issued Under the Davis-Bacon and related Acts'' being modified are listed by Volume and State. Dates of publication in the **Federal Register** are in parentheses following the decisions being modified.

Volume I

New York
NY02003 (Mar.01,2002)

Volume II

Maryland
MD020002 (Mar. 1, 2002)
MD020015 (Mar. 1, 2002)
MD020023 (Mar. 1, 2002)
MD020031 (Mar. 1, 2002)
MD020055 (Mar. 1, 2002)

Volume III

None
Indiana
IN020001 (Mar. 1, 2002)
IN020002 (Mar. 1, 2002)
IN020003 (Mar. 1, 2002)
IN020004 (Mar. 1, 2002)
IN020005 (Mar. 1, 2002)
IN020006 (Mar. 1, 2002)
IN020007 (Mar. 1, 2002)
IN020008 (Mar. 1, 2002)
IN020009 (Mar. 1, 2002)
IN020010 (Mar. 1, 2002)
IN020011 (Mar. 1, 2002)
IN020017 (Mar. 1, 2002)
IN020019 (Mar. 1, 2002)
Michigan
MI020001 (Mar. 1, 2002)
MI020004 (Mar. 1, 2002)
MI020005 (Mar. 1, 2002)
MI020007 (Mar. 1, 2002)
MI020027 (Mar. 1, 2002)
MI020030 (Mar. 1, 2002)
MI020047 (Mar. 1, 2002)
MI020060 (Mar. 1, 2002)
MI020063 (Mar. 1, 2002)
MI020064 (Mar. 1, 2002)
MI020066 (Mar. 1, 2002)
MI020067 (Mar. 1, 2002)
MI020068 (Mar. 1, 2002)
MI020069 (Mar. 1, 2002)
MI020070 (Mar. 1, 2002)
MI020071 (Mar. 1, 2002)
MI020072 (Mar. 1, 2002)
MI020073 (Mar. 1, 2002)
MI020074 (Mar. 1, 2002)
MI020076 (Mar. 1, 2002)
MI020077 (Mar. 1, 2002)
MI020079 (Mar. 1, 2002)
MI020080 (Mar. 1, 2002)
MI020081 (Mar. 1, 2002)
MI020082 (Mar. 1, 2002)
MI020083 (Mar. 1, 2002)
MI020084 (Mar. 1, 2002)
MI020089 (Mar. 1, 2002)
MI020090 (Mar. 1, 2002)
MI020091 (Mar. 1, 2002)
MI020092 (Mar. 1, 2002)
MI020093 (Mar. 1, 2002)
MI020094 (Mar. 1, 2002)
MI020095 (Mar. 1, 2002)
MI020096 (Mar. 1, 2002)
MI020097 (Mar. 1, 2002)

Volume V

None

Volume VI

MT020001 (Mar. 1, 2002)
MT020003 (Mar. 1, 2002)
MT020004 (Mar. 1, 2002)
MT020005 (Mar. 1, 2002)
MT020008 (Mar. 1, 2002)
MT020033 (Mar. 1, 2002)
MT020035 (Mar. 1, 2002)
Utah
UT020001 (Mar. 1, 2002)
UT020006 (Mar. 1, 2002)
UT020007 (Mar. 1, 2002)
UT020008 (Mar. 1, 2002)
UT020009 (Mar. 1, 2002)
UT020011 (Mar. 1, 2002)
UT020012 (Mar. 1, 2002)
UT020013 (Mar. 1, 2002)
UT020015 (Mar. 1, 2002)
UT020023 (Mar. 1, 2002)
UT020024 (Mar. 1, 2002)
UT020025 (Mar. 1, 2002)
UT020026 (Mar. 1, 2002)
UT020028 (Mar. 1, 2002)
UT020029 (Mar. 1, 2002)
UT020034 (Mar. 1, 2002)

Volume VII

NV020002 (Mar. 1, 2002)
NV020009 (Mar. 1, 2002)

General Wage Determination Publication

General wage determinations issued under the Davis-Bacon and related Acts, including those noted above, may be found in the Government Printing Office (GPO) document entitled ''General Wage determinations Issued Under the Davis-Bacon And Related Acts''. This publication is available at each of the 50 Regional Government Depository Libraries and many of the 1,400 Government Depository Libraries across the country.

General wage determinations issued under the Davis-Bacon and related Acts are available electronically at no cost on the Government Printing Office site at *www.access.gpo.gov/davisbacon.* They are also available electronically by subscription to the Davis-Bacon Online Service (*http://davisbacon.fedworld.gov*) of the National Technical Information Service (NTIS) of the U.S. Department of Commerce at 1–800–363–2068. This subscription offers value-added features such as electronic delivery of modified wage decisions directly to the user's desktop, the ability to access prior wage decisions issued during the year, extensive Help desk Support, etc.

Hard-copy subscriptions may be purchased from: Superintendent of Documents, U.S. Government Printing Office, Washington, DC 20402. (202) 512–1800.

When ordering hard-copy subscription(s), be sure to specify the State(s) of interest, since subscriptions may be ordered for any or all of the six separate Volumes, arranged by State. Subscriptions include an annual edition (issued in January or February) which includes all current general wage determinations for the States covered by each volume. Throughout the remainder of the year, regular weekly updates will be distributed to subscribers.

Signed in Washington, DC, this 19th day of December, 2002.

Carl J. Poleskey,

Chief, Branch of Construction Wage Determinations.

[FR Doc. 02–32507 Filed 12–26–02; 8:45 am]

BILLING CODE 4510–27–M

NATIONAL CREDIT UNION ADMINISTRATION

Agency Information Collection Activities: Submission to OMB for Review; Comment Request

AGENCY: National Credit Union Administration (NCUA).

ACTION: Request for comment.

SUMMARY: The NCUA intends to submit the following information collection to the Office of Management and Budget (OMB) for review and clearance under the Paperwork Reduction Act of 1995 (Pub. L. 104–13, 44 U.S.C. Chapter 35). This information collection is published to obtain comments from the public.

DATES: Comments will be accepted until February 25, 2003.

ADDRESSES: Interested parties are invited to submit written comments to NCUA Clearance Officer or OMB Reviewer listed below:

Clearance Officer: Mr. Neil McNamara (703) 518–6447, National Credit Union Administration, 1775 Duke Street, Alexandria, VA 22314–3428, Fax No. 703–518–6489, E-mail: *mcnamara@ncua.gov.*

OMB Reviewer: Mr. Joseph F. Lackey (202) 395–4741, Office of Management and Budget, Room 10226, New Executive Office Building, Washington, DC 20503.

FOR FURTHER INFORMATION CONTACT: Copies of the information collection requests, with applicable supporting documentation, may be obtained by calling the: NCUA Clearance Officer, Neil McNamara, (703) 518–6447. It is also available on the following Web site: *http://www.NCUA.gov.*

SUPPLEMENTARY INFORMATION: Proposal for the following collection of information:

OMB Number: 3133–0141.

Form Number: N/A.

Type of Review: Reinstatement, without change, of a previously approved collection for which approval has expired.

Title: 12 CFR part 701.22 Organization and Operation of Credit Unions.

Description: NCUA has authorized federal credit unions to engage in loan participations, provided they establish written policies and enter into a written loan participation agreement. NCUA believes written policies are necessary to ensure a plan is fully considered before being adopted by the Board.

Respondents: All Federal Credit Unions.

Estimated No. of Respondents/Record keepers: 1,000.

Estimated Burden Hours Per Response: 4 hours.

Frequency of Response: On occasion.

Estimated Total Annual Burden Hours: 4,000.

Estimated Total Annual Cost: $100,000.

By the National Credit Union Administration Board on December 19, 2002.

Becky Baker,

Secretary of the Board.

[FR Doc. 02–32782 Filed 12–26–02; 8:45 am]

BILLING CODE 7535–01–M

NATIONAL CREDIT UNION ADMINISTRATION

Community Development Revolving Loan Program for Credit Unions

AGENCY: National Credit Union Administration.

ACTION: Notice of application period.

SUMMARY: The National Credit Union Administration (NCUA) will accept applications for participation in the Community Development Revolving Loan Fund's Loan Program throughout calendar year 2003, subject to availability of funds. Application procedures for qualified low-income credit unions are in NCUA Rules and Regulations.

ADDRESS: Applications for participation may be obtained from and should be submitted to: NCUA, Office of Credit Union Development, 1775 Duke Street, Alexandria, VA 22314–3428.

DATES: Applications may be submitted throughout calendar year 2003.

FOR FURTHER INFORMATION CONTACT: The Office of Credit Union Development at the above address or telephone (703) 518–6610.

SUPPLEMENTARY INFORMATION: Part 705 of the NCUA Rules and Regulations implements the Community Development Revolving Loan Program for Credit Unions. The purpose of the Program is to assist officially designated ''low-income'' credit unions in providing basic financial services to residents in their communities that result in increased income, ownership, and employment. The Program makes available low interest loans in amounts up to $300,000 in the aggregate to qualified participating ''low-income'' credit unions. Program participation is limited to existing credit unions with an official ''low-income'' designation. Student credit unions are not eligible to participate in this Program.

This notice is published pursuant to section 705.9 of the NCUA Rules and Regulations that states NCUA will provide notice in the **Federal Register** when funds in the Program are available.

By the National Credit Union Administration Board on December 19, 2002.

Becky Baker,

Secretary, National Credit Union Administration Board.

[FR Doc. 02–32781 Filed 12–26–02; 8:45 am]

BILLING CODE 7535–01–P

NATIONAL CREDIT UNION ADMINISTRATION

Corporate Federal Credit Union Bylaws

AGENCY: National Credit Union Administration (NCUA).

ACTION: Notice and request for comment.

SUMMARY: The proposed changes update the corporate federal credit union (FCU) bylaws. This action is necessary because several of the bylaws had become outdated or obsolete. The proposal is intended to modernize and clarify the corporate FCU bylaws.

DATES: Comments must be received by February 25, 2003.

ADDRESSES: Comments should be directed to Becky Baker, Secretary of the Board. Mail or hand-deliver comments to: National Credit Union Administration, 1775 Duke Street, Alexandria, Virginia 22314–3428. You may Fax comments to (703) 518–6319 or E-mail comments to *boardmail@ncua.gov. Please send comments by one method only.*

FOR FURTHER INFORMATION CONTACT: Kent D. Buckham, Director, Office of Corporate Credit Unions (OCCU), National Credit Union Administration, 1775 Duke Street, Alexandria, Virginia 22314–3428 or telephone: (703) 518–6640.

SUPPLEMENTARY INFORMATION:

Background

Section 108 of the Federal Credit Union Act (the Act) requires the NCUA Board to prepare bylaws to be used by all federal credit unions (FCUs). 12 U.S.C. 1758. The Garn-St Germain Depository Institutions Act of 1982 authorized the NCUA Board to differentiate the activities of corporate credit unions from natural person credit unions through rules, regulations, and orders of the NCUA Board. In recognition of the unique mission and operating needs of corporate FCUs, the NCUA Board, in coordination with the corporate credit union community, developed and adopted a set of standard Corporate Federal Credit Union Bylaws (bylaws) in March of 1983. Some revisions to specific bylaw articles related to Meetings of Members and Elections were published in the **Federal Register** in November 1994 amending the bylaws that were published in 1983. In the past 20 years significant regulatory, economic and institutional changes have taken place. The proposed revisions to the bylaws reflect the current legal and financial environment within which corporate credit unions operate.

Proposed Corporate FCU Bylaws

The proposed bylaws have been revised so that they are more user friendly for corporate FCUs. Every effort was made to draft the proposed bylaws in plain English. Provisions in the existing bylaws that are outdated are deleted. Those provisions that are operational or addressed in law or regulations are deleted, unless it was determined that because of their importance they should also be included in the bylaws. In addition, revisions are proposed to modernize the bylaws, recognizing technological advances utilized by corporate credit unions. A table of contents will be provided with the final version of the bylaws.

Corporate FCUs will be strongly encouraged to adopt the revised bylaws when they are finalized, but are not required to do so and may continue to use their previously approved bylaws. The Board, in an effort to achieve maximum participation by corporate FCUs, will allow them to adopt portions of the revised bylaws, if a corporate FCU finds that adoption of the entire revised bylaws is impracticable. The Board cautions corporate FCUs adopting only a portion of the revised bylaws to use extreme care because they run the risk of having inconsistent or conflicting bylaw provisions. In addition, although the Act requires corporate FCUs to use

the bylaws published by NCUA, corporate FCUs will continue to have the flexibility to request a nonstandard bylaw amendment if the need arises. 12 U.S.C. 1758. A corporate FCU must obtain approval from the Director of OCCU to adopt a non-standard bylaw.

Article by Article Analysis

The following articles and sections have no substantive changes. There may be some minor editing or technical corrections:

Article I (renumbered Article II), Sections 1 and 2;

Article II (renumbered Article III), Section 1 and 2;

Article III (renumbered Article IV) Section 4 (renumbered Section 2) and Section 5 (renumbered Section 3);

Article IV (renumbered Article V) Section 1;

Article VI (renumbered Article VII) Section 1, 2, 3, 5, 6, 8, 9, and 10;

Article VII (renumbered Article VIII) Section 1, 2, 3, 4, 5, 6, 7, 8, 9 and addendum;

Article VIII (renumbered Article IX) Section 1, 3, 4, 5, 6, 7 and addendum;

Article IX (renumbered Article X) Section 1, 2, 3, 4, 5 and 6;

Article XV (renumbered Article XI) Section 3; and

Article XVII (renumbered Article XIII) Section 1.

The following articles and sections have substantive changes:

Article II Renumbered Article III, Membership

In *Section 3,* the consideration that the account of a member who has subscribed to a share and is current on the installment payments will not be terminated under the provisions of this section has been removed. It was eliminated due to the inapplicability to current corporate operations.

Section 4 has been deleted because it required members to be terminated that were no longer within the field of membership on the day the bylaw was effective. The section has been amended to allow a member to remain a member until the person or entity withdraws or is expelled. It also permits a corporate FCU to restrict services to a member no longer in the field of membership and addresses the termination of membership in the case of a member converting to another form of financial institution.

The portion of *Section 5* following the first sentence has been deleted. It has been eliminated because it addressed operational procedures regarding the expulsion or withdrawal of a member of the corporate FCU.

Article III—Renumbered Article IV, Shares of Members

Section 1 addresses the par value of a share. It eliminates the alternative of paying for the share in installments and requires the payment of the share to be made at the time of subscription. This change reflects current corporate FCU procedure.

Section 2 (Maximum Shares), *Section 3* (Receipt of Transactions), *Section 6* (Trust Accounts), and *Section 7* (Notice of Withdrawal) were deleted. These sections were operational in nature or antiquated.

Article IV—Renumbered Article V, Meetings of Members

Section 2 addresses notice of meetings. This section was revised in November 1994 when amendments were adopted for both Part 704 and the bylaws as published in the **Federal Register**. The following proposed revisions address changes to the November 1994 version of this section. The words ''must give'' have replaced ''mailed'' in regard to meeting notification. It broadens the manner in which notification can be accomplished to allow electronic delivery. This section was also revised to address meeting notification for members who have consented to the electronic delivery of documents.

Section 3 was amended to allow a special meeting request by 5 percent of the members instead of at least 25 members or 5 percent of the members. This relaxed the threshold for smaller corporate FCUs to request a special meeting.

Section 4 was amended by inserting the lesser of 15 members or 20 percent of the membership instead of 15 members being required for a quorum.

Article V-Renumbered Article VI, Elections

Sections 1 and 2 of this Article were revised and *Sections 4 and 5* were added in November 1994 when amendments where adopted for both Part 704 and the bylaws as published in the **Federal Register**. The following proposed revisions address changes to the November 1994 version of this section.

In *Section 1*, references to candidate have been changed to member. The wording ''Notice may be accomplished as prescribed in Article V, Section 2.'' was inserted referring to members consenting to the electronic delivery of documents. The regulatory reference was updated, changed from 704.12(a) to 704.14(a), to reflect the appropriate section of Part 704.

Section 2 regarding the election process was deleted. It has been replaced by Section 2 of option A4 from Article V of the Federal Credit Union Bylaws revised October 1999. This option allows election by electronic device, including but not limited to telephone and electronic mail. In addition, the following amendments were added to the section: A sentence stating that all elections are determined by plurality vote; in subsection (c)(1), the requirement that a brief statement of qualifications and biographical data be provided for each candidate and the order of the candidates' names be printed on the notice of balloting as determined by the drawing of lots; and in subsections (c)(5) and (d)(8), the phrase ''by the secretary'' has been added as the person responsible for verifying the vote at the annual meeting.

Section 3 regarding proxy voting was deleted. It has been replaced by Article V, Section 3 of option A4 from the Federal Credit Union Bylaws revised October 1999 pertaining to nominations.

Section 4 regarding mail balloting was deleted. It has been replaced by Article V, Section 4 of option A4 from the Federal Credit Union Bylaws revised October 1999 pertaining to proxy voting. Added to this section was the limitation that a voting representative may serve as a voting representative of only one member and a member has only one vote.

A *Section 5* has been added requiring notification to NCUA of the names and addresses of various officials and committee members.

Article VI (Renumbered Article VII), Board of Directors

In *Section 4*, the following terms have been replaced: ''conference-telephone-call meetings'' with meetings ''using audio or video teleconference methods,'' ''executive officer'' with ''chair,'' ''ranking assistant executive officer'' with ''ranking vice chair'' and ''conferee'' with ''participant''. This section now allows teleconference methods for conducting special meetings. The requirement of in person meetings has been relaxed from one per quarter to one per year.

In *Section 7*, Asset/Liability Management Committee (ALCO) member replaces investment committee member. The section previously allowed the board to designate another member of the corporate credit union to act temporarily in the place of a board member, membership officer, executive committee or investment committee member who is absent, disqualified, or unable to perform the duties of their office. This section has been revised to

include credit committee members as also eligible for temporary replacement by a designee of the board. In addition, the board may designate a member or members of the corporate to act on all committees mentioned in this section, when necessary, to attain a quorum. This was broadened from just the credit committee.

Article VII (Renumbered Article VIII), Board Officers, Executive Committee, Asset/Liability Management Committee (ALCO), and Management Staff

In *Section 10*, the ALCO replaces the investment committee. This section now requires the appointment of an ALCO of at least three. The previous section allowed the board's discretion in appointing an investment committee of at least two. This section is amended to reflect the inclusion of at least one board member on the ALCO, providing consistency with regulatory requirements.

In *Section 11*, the ALCO replaces the investment committee.

Article VIII (Renumbered Article IX), Credit Committee

Section 2 has been revised to include qualified corporate credit union staff as eligible for selection to the credit committee.

Article X, Loan and Lines of Credit; Article XI, Reserves; Article XII, Dividends; and Article XIII, Deposit and Disbursement of Funds—Investments and Borrowing

These Articles have been deleted. They addressed operational procedures, more appropriately covered by internal corporate FCU guidance.

Article XIV (Renumbered Article I), Definitions

The definitions for the terms ''paid-in and unimpaired capital'', and ''surplus'' were deleted. Such terms are operational in nature. The term ''board'' was added and defined.

Article XV (Renumbered Article XI), General

In *Section 1*, the confidentiality of members' transactions was previously qualified ''except to the extent deemed necessary by the board.'' It has been changed to ''except when permitted by state or federal law.''

Section 2 has been revised to state that the ALCO members as well as any member of the credit committee or the supervisory committee that has been disqualified must withdraw from deliberation or determination of a committee matter.

Article XVI (Renumbered Article XII), Operations Following an Attack on the United States (Title amended to: Operations Following an Attack on the United States or Catastrophic Occurrence Otherwise Rendering the Corporate Credit Union Inoperable)

Section 1 has been revised to include ''or other catastrophic occurrence causing a contingency situation.''

Section 2 has been revised to include ''catastrophic occurrence'' and a ''contingency situation.''

Section 3 was added to this article. It requires maintaining and periodically testing an organization-wide contingency plan that addresses all reasonable emergency and disaster scenarios.

Request for Comment

The Board is interested in receiving comments on the proposed format of the FCU Bylaws, as well as any substantive issues those commenting wish to see addressed in the final bylaws.

By the National Credit Union Administration Board on December 19, 2002.

Becky Baker,

Secretary of the Board.

Bylaws

Federal Credit Union, Charter No. _____

(A Corporation Chartered Under the Laws of the United States)

Article I. Definitions

Section 1. When used in these bylaws the terms:

(a) ''Act'' means the Federal Credit Union Act, as amended.

(b) ''Administration'' means the National Credit Union Administration.

(c) ''Regulation'' or ''regulations'' means rules and regulations issued by the National Credit Union Administration.

(d) ''Share'' or ''shares'' means any amount deposited for the credit of a member or other account holder and includes, but is not limited to, share accounts, share certificate accounts, share draft accounts, and nonmember accounts (however denominated) permitted by law.

(e) ''Board'' means board of directors of this corporate credit union.

Section 2. If included in the definition of the field of membership in the organization certificate (charter) of this corporate credit union, the term or expression ''organizations of such members'' means an organization or organizations composed of entities that are within the field of membership of this corporate credit union.

Article II. Name—Purposes

Section 1. The name of this corporate credit union is as stated in Section 5 of the charter (approved organization certificate) of this corporate credit union.

Section 2. The purpose of this corporate credit union is to foster and promote the economic well-being, growth and development of its members through effective funds management, interlending, investment services and such other activities and services that may be beneficial to its members and are authorized by Act and regulations.

Article III. Membership

Section 1. The field of membership of this corporate credit union is limited to that stated in Section 5 of its charter.

Section 2. Applications for membership eligibility under Section 5 of the charter must be signed by the applicant on forms approved by the board. Upon approval of the application and upon subscription to a share with par value as established by the board in Article IV and the payment of a uniform entrance fee, if required by the board, the applicant is admitted to membership. Application must be approved by a majority of the directors, a majority of the members of a duly authorized executive committee, or by a membership officer. If a membership application is denied, the reasons must be furnished in writing to the applicant upon written request.

Section 3. Membership of any member whose account contains less than the minimum required in Article IV, Section 1 may be terminated in accordance with procedures established by the board of directors.

Section 4. Once a person or entity becomes a member that person or entity may remain a member until the person or organization chooses to withdraw or is expelled in accordance with the Act. A corporate credit union that wishes to restrict services to members no longer within the field of membership should specify the restrictions in this section. In the case of a member credit union that converts to another form of financial institution outside the field of membership, membership ceases at a mutually agreeable time not to exceed six months from the conversion date.

Section 5. A member may be expelled only in the manner provided by the Act.

Article IV. Shares of Members

Section 1. The par value of each share will be_____(as determined by the board) and payable at the time of the subscription.

Section 2. Shares of a member may be transferred among the member's

accounts or to another member in such manner as the board may prescribe.

Section 3. Unless otherwise provided by the board, shares may be withdrawn on any day when payment on shares may be made; provided that no member may withdraw shareholdings that are pledged as required security on loans without the written approval of the credit committee or a loan officer, except to the extent that such shares exceed the member's total primary and contingent liability to the corporate credit union.

Article V. Meetings of Members

Section 1. The annual meeting of the members must be held at such time and place as the board will determine and announce in the notice prescribed in section 2 of this Article.

Section 2. At least 75 days before the date of any annual meeting or 10 days before the date of any special meeting of the members, the secretary must give written notice to each member appearing on the records of this corporate credit union. Such notice must state the date, time, and location of the meeting and such other information as the board of directors determine consistent with these bylaws. Any meeting of the members, whether annual or special, may be held without prior notice, at any place or time, if all the members entitled to vote, who are not present at the meeting, waive notice in writing, before, during, or after the meeting. The notice for the annual meeting will advise the members of the deadlines for elections.

In the case of members who have previously consented to the electronic delivery of documents, said notice may be sent by electronic mail to the e-mail address that appears on the records of the corporate credit union.

Section 3. Special meetings of the members may be called by the executive officer or the supervisory committee as provided in these bylaws, or by applicable law or regulation, and may be held at any place permitted for the annual meeting. A special meeting must be called by the executive officer within 45 days of receipt of a request of 5 percent of the members as of the day of request; provided that a request of no more than 100 members is required. Notice must be given as provided in section 2 of this article and must state the purpose for which it is to be held. No business other than that related to this purpose may be transacted at the meeting.

Section 4. The lesser of 15 members or 20 percent of the membership constitutes a quorum at any annual or special meeting. If a quorum is not present on the date first designated for the meeting, an adjournment may be taken to a date not fewer than 7 days or more than 30 days thereafter, and a second notice will be given to all members setting forth the date, time, and place of the adjourned meeting. The members then present constitute a quorum, regardless of the number of members present.

Article VI. Elections

Section 1. At least 120 days before each annual meeting, the board of directors will appoint a nominating committee of not fewer than three members. It is the duty of the nominating committee to nominate at least one member for each vacancy, including any unexpired term vacancy, for which elections are being held, and to determine that the members nominated are agreeable to the placing of their names in nomination and will accept office if elected. The nominating committee files its nominations with the secretary of the corporate credit union at least 90 days prior to the annual meeting, and the secretary notifies in writing all members eligible to vote at least 75 days prior to the annual meeting that nominations for vacancies may also be made by petition signed by 5 percent of the members with a minimum of 5 and a maximum of 100.

Notice may be accomplished as prescribed in Article V, Section 2.

The written notice must indicate that the election will not be conducted by ballot and there will be no nominations from the floor when there is only one nominee for each position to be filled. A brief statement of qualifications and biographical data in a form approved by the board of directors will be included for each nominee submitted by the nominating committee with the written notice to all eligible members. Each nominee by petition must submit a similar statement of qualifications and biographical data with the petition. The written notice must state the closing date for receiving nominations by petition. In all cases, the period for receiving nominations by petition must extend at least 30 days from the date of the petition requirement and the list of nominating committee's nominees are mailed to all members. To be effective, such nominations must be accompanied by a signed certificate from the nominee or nominees stating that they are agreeable to nomination and will serve if elected to office. Such nominations must be filed with the secretary of the corporate credit union at least 40 days prior to the annual meeting.

In carrying out their responsibilities, the nominating committee and board of directors must ensure that the requirements of § 704.14 (a) of the regulations are satisfied.

Section 2. All elections are determined by plurality vote. All elections will be by electronic device or mail ballot, subject to the following conditions:

(a) The election tellers will be appointed by the board of directors;

(b) If sufficient nominations are made by the nominating committee or by petition to provide more than one nominee for any position to be filled, the secretary, at least 30 days prior to the annual meeting, will cause either a printed ballot or notice of ballot to be mailed to all members eligible to vote;

(c) If the corporate credit union is conducting its elections electronically, the secretary will cause the following materials to be mailed to each eligible voter and the following procedures will be followed:

(1) One notice of balloting stating the names of the candidates for the board of directors and the candidates for other separately identified offices or committees are printed in order as determined by the draw of lots. The name of each candidate must be followed by a brief statement of qualifications and biographical data in a form approved by the board of directors.

(2) One instruction sheet stating specific instructions for the electronic election procedure, including how to access and use the system, and the period of time in which votes will be taken. The instruction will state that members without the requisite electronic device necessary to vote on the system may vote by mail ballot upon written or telephone request and specify the date the request must be received by the corporate credit union.

(3) It is the duty of the tellers of election to verify, or cause to be verified the name of the voter and the corporate credit union account number as they are registered in the electronic balloting system. It is the duty of the teller to test the integrity of the balloting system at regular intervals during the election period.

(4) Ballots must be received no later than midnight 5 calendar days prior to the annual meeting.

(5) Voting will be closed at the midnight deadline specified in subsection (4) hereof and the vote will be tallied by the tellers. The result must be verified at the annual meeting by the secretary and the chair will make the result of the vote public at the annual meeting.

(6) In the event of malfunction of the electronic balloting system, the board of directors may in its discretion order

elections be held by mail ballot only. Such mail ballots must conform to section 2(d) of this Article and must be mailed to all eligible members 30 days prior to the annual meeting. The board may make reasonable adjustments to the voting time frames above, or postpone the annual meeting when necessary, to complete the elections prior to the annual meeting.

(d) If the corporate credit union is conducting its election by mail ballot, the secretary will cause the following materials to be mailed to each member and the following procedures will be followed:

(1) One ballot, clearly identified as such, on which the names of the candidates for the board of directors and the candidates for other separately identified offices or committees are printed in order as determined by the draw of lots. The name of each candidate will be followed by a brief statement of qualifications and biographical data in a form approved by the board of directors.

(2) One ballot envelope clearly marked with instructions that the completed ballot must be placed in that envelope and sealed.

(3) One identification form to be completed so as to include the name, address, signature and corporate credit union account number of the voter.

(4) One mailing envelope in which the voter, pursuant to instructions provided with the mailing envelope, must insert the sealed ballot envelope and the identification form, and which must have postage prepaid and be preaddressed for return to the tellers.

(5) When properly designed, one form can be printed that represents a combined ballot and identification form, and postage prepaid and preaddressed return envelope.

(6) It is the duty of the tellers to verify, or cause to be verified, the name and corporate credit union account number of the voter as appearing on the identification form; to place the verified identification form and the sealed ballot envelope in a place of safekeeping pending the count of the vote; in the case of a questionable or challenged identification form, to retain the identification form and sealed ballot envelope together until the verification or challenge has been resolved.

(7) Ballots mailed to the tellers must be received by the tellers no later than midnight 5 days prior to the date of the annual meeting.

(8) Voting will be closed at the midnight deadline specified in subsection (7) hereof and the vote will be tallied by the tellers. The result will be verified at the annual meeting by the secretary and the chair will make the result of the vote public at the annual meeting.

Section 3. Nominations may be in the following order:

(a) Nominations for directors;

(b) Nominations for credit committee members, if applicable; elections may be by separate ballots following the same order as the above nominations or, if preferred, may be by one ballot for all offices.

Section 4. Members cannot vote by proxy, but a member other than a natural person may vote through an agent designated in writing for the purpose. A trustee, or other person acting in a representative capacity, is not, as such, entitled to vote. No voting representative may serve as a voting representative of more than one member. Irrespective of the number of shares, no member has more than one vote.

Section 5. The names and addresses of members of the board, board officers, executive committee, and members of the credit committee, if applicable, and supervisory committees must be forwarded to NCUA in accordance with the Act and regulations in the manner as may be required by NCUA.

Article VII. Board of Directors

Section 1. The board consists of ____ members elected from among the members and/or designated representatives of members. The number of directors may be changed to an odd number not fewer than five by resolution of the board. No reduction in the number of directors may be made unless corresponding vacancies exist as a result of deaths, resignations, expiration of terms of office, or other actions provided by these bylaws. A copy of the resolution of the board covering any increase or decrease in the number of directors must be filed with the official copy of the bylaws of this corporate credit union.

Section 2. Regular terms of office for directors must be periods of either 1, 2 or 3 years as the board determines; provided that all regular terms must be for the same number of years and until the election and qualification of successors. The regular terms must be fixed at the beginning, or upon any increase or decrease in the number of directors, so that approximately an equal number of regular terms must expire at each annual meeting.

Section 3. Any vacancy on the board, credit committee, or supervisory committee will be filled by vote of a majority of the directors then holding office. Directors and credit committee members so appointed will hold office only until the next annual meeting, at which any unexpired terms will be filled by vote of the members, and until the qualification of their successors. Members of the supervisory committee so appointed will hold office until the first regular meeting of the board following the next annual meeting of members at which the regular term expires and until the appointment and qualification of their successors.

Section 4. A regular meeting of the board must be held each month at the time and place fixed by resolution of the board. One regular meeting each calendar year must be conducted in person. If a quorum is present in person for the annual in person meeting, the remaining board members may participate using audio or video teleconference methods. The other regular meetings may be conducted using audio or video teleconference methods. At least 7 days prior to each meeting, the secretary will cause the following information to be distributed to each director:

(a) Minutes of the last meeting;

(b) Reports of officers, standing committees, or of any special committee;

(c) Special orders, or matters which have been assigned priority; and

(d) Any written information on unfinished business or new business that has been given to the secretary by any director.

Each participant of a teleconference meeting at the next regularly convened meeting of the board at which the participant is present must sign minutes of audio or video teleconference meetings.

The chair, or in the chair's absence the ranking vice chair, may call a special meeting of the board at any time and must do so upon written request of a majority of the directors then holding office. Unless the board prescribes otherwise, the chair, or in the chair's absence the ranking vice chair, will fix the time and place of special meetings. Notice of all meetings will be given in such manner as the board may from time to time by resolution prescribe. Special meetings may be conducted using audio or video teleconference methods.

Section 5. The board has the general direction and control of the affairs of this corporate credit union and is responsible for establishing programs to achieve the purposes of this corporate credit union as stated in Article II, section 2, of these bylaws. While the board may, as authorized herein, delegate the performance of administrative duties, the board is not

relieved from its responsibility for their performance.

Section 6. A majority of the number of directors constitutes a quorum for the transaction of business at any meeting thereof, but fewer than a quorum may adjourn from time to time until a quorum is in attendance.

Section 7. If a director or credit committee member fails to attend three consecutive regular meetings of the board or credit committee; respectively, or otherwise fails to perform any of the duties devolving upon him/her as a director or credit committee member, his/her office may be declared vacant by the board and the vacancy filled as herein provided. The board may remove any board officer from office for failure to perform the duties thereof, after giving the officer reasonable notice and opportunity to be heard.

When any board officer, membership officer, executive committee member, or Asset/Liability Management Committee (ALCO) member, or credit committee member is absent, disqualified, or otherwise unable to perform the duties of his/her office, the board may, by resolution, designate another member of this corporate credit union to act temporarily in his/her place. The board may also, by resolution, designate another member or members of this corporate credit union to act on said committees, when necessary, in order to attain a quorum.

Section 8. Any member of the supervisory committee may be suspended by a majority vote of the board of directors. The members of this corporate credit union will decide, at a special meeting held not fewer than 7 nor more than 14 days after any such suspension, whether the suspended committee member will be removed from or restored to the supervisory committee.

Section 9. No member of the board of directors may receive any compensation or benefit solely as a result or by virtue of service as a member of the board of directors except for reimbursement for reasonable expenses incurred in the performance of official duties and as provided for in Article VIII of these bylaws.

Section 10. The board of directors will determine that monthly financial statements are prepared showing the condition of this corporate credit union. These financial statements will be readily available to members on a monthly basis in a manner deemed appropriate by the board.

Article VIII. Board Officers, Executive Committee, Asset/Liability Management Committee (ALCO), and Management Staff

Section 1. The board officers of this corporate credit union are comprised of an executive officer, one or more assistant executive officers, a financial officer, and a secretary, all of whom will be elected by the board and from their number. The board will determine the title and rank of each board officer and record them in the addendum to this article. One board officer, the _____, may be compensated for his/her services to such extent as may be determined by the board. If more than one assistant executive officer is elected, the board will determine their rank as first assistant executive officer, second assistant executive officer, and so on. The offices of financial officer and secretary only may be held by the same person. Unless removed as provided in these bylaws, the officers elected at the first meeting of the board will hold office until the first meeting of the board following the first annual meeting of the members and until the election and qualification of their respective successors.

Section 2. Board officers will be elected at the first meeting of the board following the annual meeting of the members, which must be held not later than 7 days after the annual meeting. The elected officers will hold office until the first board meeting following the next annual meeting of the members and until the election and qualification of their respective successors; provided that any person elected to fill a vacancy caused by the death, resignation, or removal of an officer is elected by the board to serve only for the unexpired term of such officer and until a successor is duly elected and qualified.

Section 3. The executive officer will call and will preside at all meetings of the members and at all meetings of the board unless disqualified through suspension by the supervisory committee. The executive officer also performs such other duties as customarily appertain to the office of the executive officer or as may be directed to perform by resolution of the board not inconsistent with the Act and regulations and these bylaws.

Section 4. The ranking assistant executive officer available has and may exercise all the powers, the authority, and the duties of the executive officer during the absence of the latter or his/her inability to act.

Section 5. Unless the board employs a separate management official, the financial officer is responsible for the management of the corporate credit union and has such authority and such powers as delegated by the board to conduct business from day to day. If actually managing the corporate credit union, the financial officer may be compensated as may be determined by the board. The financial officer may employ or designate one or more assistants, as well as other employees, and may authorize them to perform any of the duties devolving on the financial officer, including the signing of checks. When so designated by the financial officer or the board, any assistant may also act as financial officer during the temporary absence of the financial officer or in the event of the financial officer's inability to act.

Section 6. The board may employ a management official who is not a member of the board and who is under the direction and control of the board, and has all of the duties, powers, rights and responsibilities of the financial officer described in Section 5. The board determines the title and the rank of each management official and records them in the addendum to this article.

Section 7. The secretary causes to be prepared and maintained full and correct records of all meetings of the members and of the board, which records will be prepared within 7 days after the respective meetings. The secretary promptly informs NCUA in writing of any change in the address of the office of this corporate credit union, or the location of its principal records. The secretary gives, or causes to be given, in the manner prescribed in these bylaws, proper notice of all meetings of the members, and performs such other duties as he/she may be directed by resolution of the board not inconsistent with the Act, regulations and these bylaws.

The board may employ one or more assistant secretaries, none of whom may also hold office as executive officer, assistant executive officer, or financial officer, and may authorize them under direction of the secretary to perform any of the duties devolving on the secretary.

Section 8. The board may appoint an executive committee of not fewer than three directors to act for it with respect to specifically delegated functions and subject to such limitations as prescribed by the board.

Section 9. The board may appoint one or more membership officers to approve applications for membership under such conditions as the board and these bylaws may prescribe. Such membership officer or officers may not be a person or persons authorized to disburse funds.

Section 10. The board will appoint an ALCO composed of not less than three, including at least one board member, to have charge of making investments under rules and procedures established by the board.

Section 11. No member of the executive committee, ALCO or membership officer may be compensated as such. Members of the executive committee, ALCO, and membership officers serve at the pleasure of the board of directors.

Addendum

The title and rank of the board officers and management officials of this corporate credit union are as follows:

(a) The executive officer is to have the title of _____.

(b) The assistant executive officer is to have the title of _____.

(c) The financial officer is to have the title of _____.

(d) The assistant financial officer is to have the title of _____.

(e) The recording officer is to have the title of _____.

(f) The assistant recording officer is to have the title of _____.

(g) The management official is to have the title of _____.

(h) The assistant management official is to have the title of _____.

Article IX. Credit Committee

Section 1. The board must determine whether or not this corporate credit union will have a credit committee, and if so, whether the committee members will be elected by the membership or appointed by the board. The board's determination is recorded in the addendum to this Article. If this corporate credit union has a credit committee, either elected or appointed, sections 2 through 7 of this Article apply. If this corporate credit union does not have a credit committee, the board will establish by resolution the procedures for appointing loan officers, delegating authority to the loan officers, and for appeal of loan officer decisions to the board of directors in accordance with applicable law and regulation.

Section 2. The credit committee consists of _____ members. Members of the credit committee must be selected from among the members of the corporate credit union and/or the designated representatives of members or qualified corporate credit union staff. The number of members of the credit committee may be changed to an odd number not fewer than three nor more than seven by resolution of the board. No reduction in the number of members may be made unless corresponding vacancies exist as a result of deaths, resignations, expiration of terms of office, or other actions provided by these bylaws. A copy of the resolution of the board covering any increase or decrease in the number of committee members must be filed with the official copy of the bylaws of this corporate credit union.

Section 3. Regular terms of office for credit committee members are for periods of either 1, 2, or 3 years as the board will determine; provided that all regular terms are for the same number of years and until the election and qualification of successors. The regular terms are fixed at the beginning, or upon any increase or decrease in the number of committee members, so that approximately an equal number of regular terms expire at each annual meeting.

Section 4. The credit committee chooses from their number a chairman and a secretary. The secretary of the committee prepares and maintains full and correct records of all actions taken by it, and such records must be prepared within 3 days after the action. The offices of chairman and of secretary may be held by the same person.

Section 5. The credit committee may, by majority vote of its members, appoint one or more loan officers to serve at its pleasure and delegate its powers to such loan officers.

Section 6. The credit committee or loan officer must inquire into the financial condition of each loan applicant. No loan or line of credit will be made unless approved by the committee or a loan officer in accordance with applicable law and regulations.

Section 7. Subject to the limits imposed by law, regulation, these bylaws, and the general policies of the board, the credit committee, or a loan officer, will determine the security, if any, required for each application and the terms of repayment.

Addendum

(a) This corporate credit union (1) will, (2) will not (delete one) have a credit committee (date of board action _____).

(b) The members of the credit committee of this corporate credit union will be: (1) Elected by the members (2) appointed by the board of directors (delete one or indicate not applicable) (date of board action _____).

Article X. Supervisory Committee

Section 1. The supervisory committee is appointed by the board from among the members and/or from among the members' designated representatives. The board determines the number of members on the committee, which may not be fewer than three nor more than five. No member of the credit committee or any employee of this corporate credit union may be appointed to the committee. Regular terms of committee members are for periods 1, 2, or 3 years as the board determines; provided that all regular terms are for the same number of years and until the appointment and qualification of successors. The regular terms expire at the first regular meeting of the board following each annual meeting.

Section 2. The supervisory committee members choose from among their number a chairman and a secretary. The secretary of the supervisory committee prepares, maintains, and has custody of full and correct records of all actions taken by it. The same person may hold the offices of chairman and of secretary.

Section 3. The supervisory committee causes to be made such audits and to prepare and submit such written reports to the board and the members as are required by the Act and regulations.

Section 4. The supervisory committee verifies or causes to be verified the accounts of members in accordance with the Act and regulations.

Section 5. By unanimous vote, the supervisory committee may suspend until the next meeting of the members any director, executive officer, or member of the credit committee. In the event of any such suspension, the supervisory committee will call a special meeting of the members to act on said suspension, which meeting will be held not fewer than 7 nor more than 14 days after such suspension. The chairman of the committee will act as chairman of the meeting unless the members select another person to act as chairman.

Section 6. By the affirmative vote of a majority of its members, the supervisory committee may, after notification to the board, call a special meeting of the members to consider any violation of the provisions of the Act or of the regulations, or of the charter, or of the bylaws of this corporate credit union, or to consider any practice of this corporate credit union which the committee deems to be unsafe or unauthorized.

Article XI. General

Section 1. The officers, directors, members of committees, and employees of this corporate credit union must hold in confidence all transactions of this corporate credit union with its members and all information respecting their business affairs, except when permitted by state or federal law.

Section 2. No director, committee member, officer, agent, or employee of this corporate credit union may participate in any manner, directly, or indirectly, in the deliberation upon or the determination of any question affecting his/her pecuniary interest or the pecuniary interest of any corporation, partnership, or association (other than this corporate credit union) in which he/she is directly or indirectly interested. In the event of the disqualification of any director respecting any matter presented to the board for deliberation or determination, such director must withdraw from such deliberation or determination and, in such event, the remaining qualified directors present at the meeting, if constituting a quorum with the disqualified director or directors, may exercise with respect to this matter, by majority vote, all the powers of the board. In the event of the disqualification of any member of the credit committee, ALCO or the supervisory committee, such committee member must withdraw from such deliberation or determination.

Section 3. The board has the right, at any time, to impose fees for such services and activities, as it deems necessary or desirable.

Article XII. Operations Following an Attack on the United States or Catastrophic Occurrence Otherwise Rendering the Corporate Credit Union Inoperable

Section 1. In the event of an attack upon the United States, or other catastrophic occurrence causing a contingency situation, the officers and employees of the corporate credit union will continue to conduct the affairs of the corporate credit union under such guidance from the directors as may be available and subject to conformance with any government directives during the emergency.

Section 2. In the event of an attack upon the United States, catastrophic occurrence, or a contingency situation, of sufficient severity to prevent the conduct and management of the affairs and business of the corporate credit union by its regularly elected directors, officers, and properly constituted committees as contemplated by these bylaws, any three available members of the then incumbent board of directors will constitute a quorum of the board of directors for the full conduct and management of the affairs and business of the corporate credit union including the approval of loans to members if the regularly elected credit committee is not available. In the event of the unavailability at such time of three members of the board, the vacancies, in order to provide a quorum of three, will be filled by a succession list established by the board of directors.

Section 3. Pursuant to this section the corporate credit union will maintain and periodically test an organization-wide contingency plan that addresses all reasonable emergency and disaster scenarios.

This bylaw is subject to implementation by resolutions of the board of directors passed from time to time for that purpose, and any provisions of these bylaws (other than this section) and any resolutions which are contrary to the provisions of this section or to the provisions of any such implemented resolutions will be suspended until a regularly constituted board of directors can be obtained.

Article XIII. Amendments of Bylaws and Charter

Section 1. Amendments of these bylaws may be adopted and amendments of the charter may be requested by the affirmative vote of two-thirds of the authorized number of members of the board at any duly held board meeting, if the members of the board have been given prior written notice of the meeting and the notice has contained a copy of the proposed amendment or amendments. No amendment of the bylaws or charter becomes effective until approved in writing by NCUA.

[FR Doc. 02–32780 Filed 12–26–02; 8:45 am]

BILLING CODE 7535–01–P

THE NATIONAL FOUNDATION ON THE ARTS AND THE HUMANITIES

Meetings of Humanities Panel

AGENCY: The National Endowment for the Humanities.

ACTION: Notice of meetings.

SUMMARY: Pursuant to the provisions of the Federal Advisory Committee Act (Pub. L. 92–463, as amended), notice is hereby given that the following meetings of the Humanities Panel will be held at the Old Post Office, 1100 Pennsylvania Avenue, NW., Washington, DC 20506.

FOR FURTHER INFORMATION CONTACT: Daniel Schneider, Advisory Committee Management Officer, National Endowment for the Humanities, Washington, DC 20506; telephone (202) 606–8322. Hearing-impaired individuals are advised that information on this matter may be obtained by contacting the Endowment's TDD terminal on (202) 606–8282.

SUPPLEMENTARY INFORMATION: The proposed meetings are for the purpose of panel review, discussion, evaluation and recommendation on applications for financial assistance under the National Foundation on the Arts and the Humanities Act of 1965, as amended, including discussion of information given in confidence to the agency by the grant applicants. Because the proposed meetings will consider information that is likely to disclose trade secrets and commercial or financial information obtained from a person and privileged or confidential and/or information of a personal nature the disclosure of which would constitute a clearly unwarranted invasion of personal privacy, pursuant to authority granted me by the Chairman's Delegation of Authority to Close Advisory Committee meetings, dated July 19, 1993, I have determined that these meetings will be closed to the public pursuant to subsections (c) (4), and (6) of section 552b of Title 5, United States Code.

1. *Date:* January 6, 2003.
Time: 8:30 a.m. to 5 p.m.
Room: 415.
Program: This meeting will review applications for Exemplary Education Projects, submitted to the Division of Education Programs at the October 15, 2002 deadline.

2. *Date:* January 6, 2003.
Time: 9 a.m. to 5 p.m.
Room: 315.
Program: This meeting will review applications for Fellowship Programs at Independent Research Institutions, submitted to the Division of Research Programs at the September 1, 2002 deadline.

3. *Date:* January 8, 2003.
Time: 8:30 a.m. to 5 p.m.
Room: 730.
Program: This meeting will review applications for Humanities Projects in Media, submitted to the Division of Public Programs at the November 1, 2002 deadline.

4. *Date:* January 8, 2003.
Time: 8:30 a.m. to 5 p.m.
Room: 415.
Program: This meeting will review applications for Exemplary Education Projects, submitted to the Division of Education Programs at the October 15, 2002 deadline.

5. *Date:* January 8, 2003.
Time: 9 a.m. to 5 p.m.
Room: Library of Congress, Jefferson Building, Wilson Room
Program: This meeting will review applications for Library of Congress John W. Kluge Fellowships Program, submitted to the Division of Research Programs, at the August 15, 2002 deadline.

6. *Date:* January 9, 2003.
Time: 8:30 a.m. to 5 p.m.
Room: 315.
Program: This meeting will review applications for Collaborative Research, submitted to the Division of Research Programs at the September 1, 2002 deadline.
7. *Date:* January 9, 2003.
Time: 8:30 a.m. to 5 p.m.
Room: 415.
Program: This meeting will review applications for Exemplary Education Projects, submitted to the Division of Education Programs at the October 15, 2002 deadline.
8. *Date:* January 10, 2003.
Time: 9 a.m. to 5 p.m.
Room: 315.
Program: This meeting will review applications for Scholarly Editions, submitted to the Division of Research Programs at the September 1, 2002 deadline.
9. *Date:* January 10, 2003.
Time: 8:30 a.m. to 5 p.m.
Room: 415.
Program: This meeting will review applications for Exemplary Education Projects, submitted to the Division of Education Programs at the October 15, 2002 deadline.
10. *Date:* January 13, 2003.
Time: 9 a.m. to 5 p.m.
Room: 315.
Program: This meeting will review applications for Collaborative Research, submitted to the Division of Research Programs at the September 1, 2002 deadline.
11. *Date:* January 13, 2003.
Time: 8:30 a.m. to 5 p.m.
Room: 415.
Program: This meeting will review applications for Humanities Projects in Media, submitted to the Division of Public Programs Education at the November 1, 2002 deadline.
12. *Date:* January 15, 2003.
Time: 9 a.m. to 5 p.m.
Room: Library of Congress, Jefferson Building, Wilson Room
Program: This meeting will review applications for Library of Congress John W. Kluge Fellowships Program, submitted to the Division of Research Programs at the August 15, 2002 deadline.
13. *Date:* January 16, 2003.
Time: 8:30 a.m. to 5 p.m.
Room: 415.
Program: This meeting will review applications for Humanities Projects in Media, submitted to the Division of Public Programs, at the November 1, 2002 deadline.
14. *Date:* January 16, 2003.
Time: 8:45 a.m. to 5 p.m.
Room: 315.
Program: This meeting will review applications for Collaborative Research, submitted to the Division of Research Programs at the September 1, 2002 deadline.
15. *Date:* January 22, 2003.
Time: 9 a.m. to 5 p.m.
Room: 315.
Program: This meeting will review applications for Collaborative Research, submitted to the Division of Research Programs at the September 1, 2002 deadline.
16. *Date:* January 22, 2003.
Time: 8:30 to 5 p.m.
Room: 415.
Program: This meeting will review applications for Humanities Projects in Media, submitted to the Division of Public Programs at the November 1, 2002 deadline.
17. *Date:* January 24, 2003.
Time: 9 a.m. to 5 p.m.
Room: 315.
Program: This meeting will review applications for Scholarly Editions, submitted to the Division of Research Programs at the September 1, 2002 deadline.
18. *Date:* January 29, 2003.
Time: 8:30 a.m. to 5 p.m.
Room: 415.
Program: This meeting will review applications for Humanities Projects in Media, submitted to the Division of Public Programs at the November 1, 2002 deadline.
19. *Date:* January 30, 2003.
Time: 8:45 a.m. to 5 p.m.
Room: 315.
Program: This meeting will review applications for Collaborative Research, submitted to the Division of Research Programs at the September 1, 2002 deadline.
20. *Date:* January 31, 2003.
Time: 9 a.m. to 5 p.m.
Room: 315.
Program: This meeting will review applications for Collaborative Research, submitted to the Division of Research Programs at the September 1, 2002 deadline.

Daniel Schneider,
Advisory Committee Management Officer.

[FR Doc. 02–32646 Filed 12–26–02; 8:45 am]
BILLING CODE 7536–01–P

NATIONAL SCIENCE FOUNDATION

Agency Information Collection Activities: Proposed Collection; Comment Request

AGENCY: National Science Foundation.

ACTION: Notice and request for comments.

SUMMARY: Under the Paperwork Reduction Act of 1995, Public Law 104–13 (44 U.S.C. 3501 *et seq.*), and as part of its continuing effort to reduce paperwork and respondent burden, the National Science Foundation (NSF) is inviting the general public or other Federal agencies to comment on this proposed continuing information collection. The National Science Foundation (NSF) will publish periodic summaries of the proposed projects.

COMMENTS: Comments are invited on (a) whether the proposed collection of information is necessary for the proper performance of the functions of the Foundation, including whether the information will have practical utility; (b) the accuracy of the Foundation's estimate of the burden of the proposed collection of information; (c) ways to enhance the quality, utility, and clarity of the information to be collected; and (d) ways to minimize the burden of the collection of information on those who are to respond, including through the use of automated collection techniques or other forms of information technology.

DATES: Written comments on this notice must be received by February 25, 2003 to be assured consideration. Comments received after that date will be considered to the extent practicable. Send comments to address below.

FOR FURTHER INFORMATION CONTACT: Ms. Suzanne H. Plimpton, Reports Clearance Officer, National Science Foundation, 4201 Wilson Boulevard, Suite 295, Arlington, Virginia 22230; telephone (703) 292–7556; or send e-mail to *splimpto@nsf.gov.* Individuals who use a telecommunications device for the deaf (TDD) may call the Federal Information Relay Service (FIRS) at 1–800–877–8339 between 8 a.m. and 8 p.m., Eastern time, Monday through Friday.

SUPPLEMENTARY INFORMATION:
Title of Collection: 2003 National Survey of Recent College Graduates.
OMB Approval Number: 3145–0077.
Expiration Date of Approval: May 31, 2004.
Type of Request: Intent to seek approval to extend an information collection for three years.

1. Abstract

The National Survey of Recent College Graduates (NSRCG) has been conducted biennially since 1974. The 2003 NSRCG will consist of a sample of individuals who have completed bachelor's and master's degrees in science and engineering from U.S. institutions. The purpose of this study is to provide national estimates on the

new entrants in the science and engineering workforce and to provide estimates on the characteristics of recent bachelor's and master's graduates with science and engineering degrees. The study is one of three components of the Scientists and Engineers Statistical Data System (SESTAT), which produces national estimates of the size and characteristics of the nation's science and engineering population.

The National Science Foundation Act of 1950, as subsequently amended, includes a statutory charge to ''* * * provide a central clearinghouse for the collection, interpretation, and analysis of data on scientific and engineering resources, and to provide a source of information for policy formulation by other agencies of the Federal Government.'' The NSRCG is designed to comply with these mandates by providing information on the supply and utilization of the nation's recent bachelor's and master's level scientists and engineers. Collected data will be used to produce estimates of the characteristics of these individuals. They will also provide necessary input into the SESTAT labor force data system, which produces national estimates of the size and characteristics of the country's science and engineering population. The Foundation uses this information to prepare congressionally mandated reports such as Women, Minorities and Persons with Disability in Science and Engineering and Science and Engineering Indicators. NSF publishes statistics from the survey in many reports, but primarily in the biennial series, Characteristics of Recent Science and Engineering Graduates in the United States. A public release file of collected data, designed to protect respondent confidentiality, also is expected to be made available to researchers on CD–ROM and on the World Wide Web.

Mathematica Policy Research, Inc. of Princeton, New Jersey will conduct the study for NSF. Data are obtained by mail questionnaire, computer assisted telephone interviews and web survey beginning October 2003. The survey will be collected in conformance with the Privacy Act of 1974 and the individual's response to the survey is voluntary. NSF will insure that all information collected will be kept strictly confidential and will be used only for research or statistical purposes, analyzing data, and preparing scientific reports and articles.

2. Expected Respondents

A statistical sample of approximately 18,000 bachelor's and master's degree recipients in science, engineering, and health will be contacted in 2003. A total response rate in 2001 was 80%.

3. Estimate of Burden

The amount of time to complete the questionnaire may vary depending on an individual's circumstances; however, on average it will take approximately 25 minutes to complete the survey. We estimate that the total annual burden will be 7,500 hours during the year.

Dated: December 23, 2002.

Suzanne H. Plimpton,

Reports Clearance Officer, National Science Foundation.

[FR Doc. 02–32768 Filed 12–26–02; 8:45 am]

BILLING CODE 7555–01–M

NUCLEAR REGULATORY COMMISSION

[Docket No. 030–13573]

In the Matter of PermaGrain Products, Incorporated, 4789 West Chester Pike, Newtown Square, Pennsylvania, 19073; License Nos. 37–17860–01, EA–02–260; Demand for Information

I

PermaGrain Products, Inc. (the Licensee) is the holder of Byproduct Material License No. 37–17860–01 issued by the Nuclear Regulatory Commission (NRC or Commission) pursuant to 10 CFR part 30. The license authorizes the possession and use of 2,000,000 curies of cobalt 60 for the irradiation of materials other than explosives or corrosive materials. The license further authorizes an additional 5,000 curies of cobalt 60 for use in a NUMEC Model NRI–300A self-shielded irradiator for irradiation of materials. The license, originally issued on December 21, 1977, was last renewed on March 7, 1997, and is due to expire on March 31, 2007. The license permits use of material at the Licensee's facilities at Reactor Road, Karthaus, Pennsylvania. PermaGrain Products, Inc., leases the location from the Commonwealth of Pennsylvania, the owner of the site.

II

On November 12, 2002, Dr. A. E. Witt, President of PermaGrain Products, Inc. informed the NRC that the Licensee was having financial difficulty and that it might declare bankruptcy. On November 13, 2002, Dr. Witt provided a letter to NRC Region I which made certain staffing and security commitments for the Karthaus facility that would continue until NRC was notified otherwise. Since that notification, PermaGrain was engaged in negotiations with a potential buyer which, if they had been successful, could have alleviated the Licensee's financial difficulties.

On December 6, 2002, Jeffrey Kurtzman, counsel to PermaGrain Products, Inc. notified the NRC that the negotiations had not been successful. He also notified the NRC that the Licensee intended to file a voluntary petition pursuant to chapter 7 of title 11 of the United States Code (the ''Bankruptcy Code'') in the United States Bankruptcy Court of the Eastern District of Pennsylvania. On December 16, 2002, Mr. Kurtzman notified NRC of the Licensee's intention to file for bankruptcy on or about December 17, 2002.

The NRC is concerned that PermaGrain's financial situation will not allow continued funding of activities that are essential to ensure radiological safety and security of licensed material present at the site. Therefore, further information is needed to determine whether the Commission can have reasonable assurance that in the future the Licensee will maintain security of licensed material as well as continued maintenance of the required safety features, including the security alarm system, ventilation system, appropriate water level in the pool, the demineralizer system, the heating system, electric and water supply in the facility, all of which are essential to ensure radiological safety at the premises.

III

Accordingly, pursuant to sections 161c, 161o, 182 and 186 of the Atomic Energy Act of 1954, as amended, and the Commission's regulations in 10 CFR 2.204 and 10 CFR part 30, in order for the Commission to determine whether your licenses should be modified, suspended or revoked, or other enforcement action taken to ensure compliance with NRC regulatory requirements, the Licensee is required to submit to the Director, Office of Enforcement, U.S. Nuclear Regulatory Commission, Washington, DC 20555, within 48 hours of the date of this Demand for Information, in writing and under oath or affirmation:

A. 1. A written description of its plan to continue to provide security over and control access to the Karthaus site, in accordance with 10 CFR parts 20 and 36;

2. A list of the essential services necessary to maintain radiation safety and security of the radioactive material on the site, and the Licensee's plan for continuation of these services. The list should include utilities, periodic maintenance and contract services, such

as a security alarm monitoring service. If the Licensee is unable to provide any of the essential services, the plan should include provisions for a third party to provide for the service(s), including providing the training necessary to adequately provide the service(s).

B. In light of the findings set forth in section II of this demand for information, the Licensee shall provide to NRC a written plan for disposition of the cobalt 60 sources (including those in the self contained irradiator) in compliance with 10 CFR 30.36. The plan shall contain:

1. A description of how the sources will be removed, packaged, transported and disposed of; and,

2. A timetable for the transfer of all licensed material from the site to an authorized recipient.

Copies also shall be sent to the Assistant General Counsel for Materials Litigation and Enforcement at the same address, and to the Regional Administrator, NRC Region I, 475 Allendale Road, King of Prussia, Pennsylvania, 19406–1415.

After reviewing your response, the NRC will determine whether further action is necessary to ensure compliance with regulatory requirements.

Dated this 17th day of December, 2002.

For the Nuclear Regulatory Commission.

Frank J. Congel,

Director, Office of Enforcement.

[FR Doc. 02–32696 Filed 12–26–02; 8:45 am]

BILLING CODE 7590–01–P

NUCLEAR REGULATORY COMMISSION

[Docket No. 50–354]

PSEG Nuclear LLC; Notice of Consideration of Issuance of Amendment to Facility Operating License, Proposed No Significant Hazards Consideration Determination, and Opportunity for a Hearing

The U.S. Nuclear Regulatory Commission (NRC or the Commission) is considering issuance of an amendment to Facility Operating License No. NPF–57, issued to PSEG Nuclear LLC (PSEG or the licensee), for operation of the Hope Creek Generating Station (Hope Creek) located in Salem County, New Jersey.

The proposed amendment would provide a one-time change to Technical Specification (TS) 4.8.1.1.2.h.14 to allow the testing of Hope Creek's emergency diesel generator (EDG) lockout relays to be performed at power until startup from its eleventh refueling outage (spring 2003). The current TS surveillance requirement (SR) only allows the EDG lockout relays to be tested during shutdown conditions. Approval and implementation of the proposed TS change would allow the testing that has been completed to be used to comply with TS 4.8.1.1.2.h.14.

PSEG has requested that the proposed TS change be issued on an exigent basis in accordance with Title 10 of the Code of Federal Regulations (10 CFR) Section 50.91(a)(6). On December 12, 2002, all 4 Hope Creek EDGs were declared inoperable at 1:07 p.m. due to the licensee's failure to fully comply with TS SR 4.8.1.1.2.h.14.a. PSEG invoked TS 4.0.3, thus permitting 24 hours to complete the required surveillance activities. The SR that was not met required the licensee to demonstrate that the EDG differential current and low lube oil pressure could independently provide trip and lockout inputs to the lockout relay 86R. TS 4.8.1.1.2.h requires this test to be performed during shutdown conditions. At 11:20 a.m. on December 13, 2002, PSEG invoked TS 4.0.3 when it determined that portions of SRs 4.8.1.1.2.h.14.b (backup relay 86B) and 4.8.1.1.2.h.14.c (breaker failure relay 86F) were missed for EDG ''A'' and EDG ''C.'' TS 4.0.3 allows the licensee to complete missed surveillance tests within a 24-hour period following discovery that a SR was not done. On December 13, 2002, PSEG requested that the NRC exercise discretion in accordance with Section VII.C of the ''General Statement of Policy and Procedures for NRC Enforcement Actions'' (Enforcement Policy), NUREG–1600, by granting a Notice of Enforcement Discretion (NOED). At the time of the NOED request, the licensee was conducting portions of testing to meet 4.8.1.1.2.h.14.b and 4.8.1.1.2.h.14.c. Because TS 4.8.1.1.2.h currently requires that these tests be performed during shutdown conditions and the time to Hope Creek's next scheduled outage would exceed the non-compliance period beyond 14 days, PSEG further requested a one-time change to TS 4.8.1.1.2.h under exigent circumstances. Approval of this one-time TS change would allow testing recently conducted during power operations to satisfy the SR on the EDG lockout relays.

Before issuance of the proposed license amendment, the Commission will have made findings required by the Atomic Energy Act of 1954, as amended (the Act) and the Commission's regulations.

Pursuant to 10 CFR 50.91(a)(6) for amendments to be granted under exigent circumstances, the NRC staff must determine that the amendment request involves no significant hazards consideration. Under the Commission's regulations in 10 CFR 50.92, this means that operation of the facility in accordance with the proposed amendment would not (1) involve a significant increase in the probability or consequences of an accident previously evaluated; or (2) create the possibility of a new or different kind of accident from any accident previously evaluated; or (3) involve a significant reduction in a margin of safety. As required by 10 CFR 50.91(a), the licensee has provided its analysis of the issue of no significant hazards consideration, which is presented below:

1. The proposed amendment does not involve a significant increase in the probability or consequences of an accident previously evaluated.

This request is only administrative in nature. Portions of the protective Emergency Diesel Generator (EDG) lockout function testing required by Technical Specification (TS) 4.8.1.1.2.h.14 were discovered to have been missed and have since been satisfactorily performed during power operation. The provision of TS 4.8.1.1.2.h that requires testing be performed during shutdown precludes PSEG from taking credit for the on-line testing to meet the surveillance requirement. The scope of this amendment request is to enable PSEG to take credit for the testing that has been performed at power to satisfy TS 4.8.1.1.2.h.14. The requested amendment applies on a one-time basis until the next refueling outage. The change is administrative and cannot affect the initiation of any accident, nor does it affect the capability of the EDGs to fulfill their design basis accident functions.

Therefore, the request does not involve a significant increase in the probability or consequences of an accident previously evaluated.

2. The proposed amendment does not create the possibility of a new or different kind of accident from any accident previously evaluated.

The request is only administrative in nature in that surveillance requirement 4.8.1.1.2.h requires the surveillance to be performed during shutdown. The operability of the EDG lockout functions has been satisfactorily demonstrated; however the surveillance requirement as presently written cannot be administratively completed due to the shutdown conditions identified in the surveillance requirement. Since no physical changes are being made to the plant and there are no changes being made to the operation of Hope Creek, this request does not create the possibility of a new or different kind of accident from any accident previously evaluated.

3. The proposed amendment does not involve a significant reduction in a margin of safety.

The operability of the EDG lockout functions has been satisfactorily demonstrated, however the surveillance

requirement as written cannot be administratively completed due to the shutdown conditions identified in the surveillance requirement. Since there is no impact to the ability of the EDG's to function during a design basis accident, this request does not involve a significant reduction in a margin of safety.

The NRC staff has reviewed the licensee's analysis and, based on this review, it appears that the three standards of 10 CFR 50.92(c) are satisfied. Therefore, the NRC staff proposes to determine that the amendment request involves no significant hazards consideration.

The Commission is seeking public comments on this proposed determination. Any comments received within 14 days after the date of publication of this notice will be considered in making any final determination.

Normally, the Commission will not issue the amendment until the expiration of the 14-day notice period. However, should circumstances change during the notice period, such that failure to act in a timely way would result, for example, in derating or shutdown of the facility, the Commission may issue the license amendment before the expiration of the 14-day notice period, provided that its final determination is that the amendment involves no significant hazards consideration. The final determination will consider all public and State comments received. Should the Commission take this action, it will publish in the **Federal Register** a notice of issuance. The Commission expects that the need to take this action will occur very infrequently.

Written comments may be submitted by mail to the Chief, Rules and Directives Branch, Division of Administrative Services, Office of Administration, U.S. Nuclear Regulatory Commission, Washington, DC 20555–0001, and should cite the publication date and page number of this **Federal Register** notice. Written comments may also be delivered to Room 6D59, Two White Flint North, 11545 Rockville Pike, Rockville, Maryland, from 7:30 a.m. to 4:15 p.m. Federal workdays. Documents may be examined, and/or copied for a fee, at the NRC's Public Document Room, located at One White Flint North, 11555 Rockville Pike (first floor), Rockville, Maryland.

The filing of requests for hearing and petitions for leave to intervene is discussed below.

By January 27, 2003, the licensee may file a request for a hearing with respect to issuance of the amendment to the subject facility operating license and any person whose interest may be affected by this proceeding and who wishes to participate as a party in the proceeding must file a written request for a hearing and a petition for leave to intervene. Requests for a hearing and a petition for leave to intervene shall be filed in accordance with the Commission's ''Rules of Practice for Domestic Licensing Proceedings'' in 10 CFR Part 2. Interested persons should consult a current copy of 10 CFR 2.714,[1] which is available at the Commission's Public Document Room, located at One White Flint North, 11555 Rockville Pike (first floor), Rockville, Maryland, and available electronically on the Internet at the NRC Web site *http://www.nrc.gov/reading-rm/doc-collections/cfr/.* If a request for a hearing or petition for leave to intervene is filed by the above date, the Commission or an Atomic Safety and Licensing Board, designated by the Commission or by the Chairman of the Atomic Safety and Licensing Board Panel, will rule on the request and/or petition; and the Secretary or the designated Atomic Safety and Licensing Board will issue a notice of hearing or an appropriate order.

As required by 10 CFR 2.714, a petition for leave to intervene shall set forth with particularity the interest of the petitioner in the proceeding, and how that interest may be affected by the results of the proceeding. The petition should specifically explain the reasons why intervention should be permitted with particular reference to the following factors: (1) the nature of the petitioner's right under the Act to be made a party to the proceeding; (2) the nature and extent of the petitioner's property, financial, or other interest in the proceeding; and (3) the possible effect of any order which may be entered in the proceeding on the petitioner's interest. The petition should also identify the specific aspect(s) of the subject matter of the proceeding as to which petitioner wishes to intervene. Any person who has filed a petition for leave to intervene or who has been admitted as a party may amend the petition without requesting leave of the Board up to 15 days prior to the first prehearing conference scheduled in the proceeding, but such an amended petition must satisfy the specificity requirements described above.

Not later than 15 days prior to the first prehearing conference scheduled in the proceeding, a petitioner shall file a supplement to the petition to intervene which must include a list of the contentions which are sought to be litigated in the matter. Each contention must consist of a specific statement of the issue of law or fact to be raised or controverted. In addition, the petitioner shall provide a brief explanation of the bases of the contention and a concise statement of the alleged facts or expert opinion which support the contention and on which the petitioner intends to rely in proving the contention at the hearing. The petitioner must also provide references to those specific sources and documents of which the petitioner is aware and on which the petitioner intends to rely to establish those facts or expert opinion. Petitioner must provide sufficient information to show that a genuine dispute exists with the applicant on a material issue of law or fact. Contentions shall be limited to matters within the scope of the amendment under consideration. The contention must be one which, if proven, would entitle the petitioner to relief. A petitioner who fails to file such a supplement which satisfies these requirements with respect to at least one contention will not be permitted to participate as a party.

Those permitted to intervene become parties to the proceeding, subject to any limitations in the order granting leave to intervene, and have the opportunity to participate fully in the conduct of the hearing, including the opportunity to present evidence and cross-examine witnesses.

If the amendment is issued before the expiration of the 30-day hearing period, the Commission will make a final determination on the issue of no significant hazards consideration. If a hearing is requested, the final determination will serve to decide when the hearing is held.

If the final determination is that the amendment request involves no significant hazards consideration, the Commission may issue the amendment and make it immediately effective, notwithstanding the request for a hearing. Any hearing held would take place after issuance of the amendment.

If the final determination is that the amendment request involves a significant hazards consideration, any hearing held would take place before the issuance of any amendment.

A request for a hearing or a petition for leave to intervene must be filed with the Secretary of the Commission, U.S. Nuclear Regulatory Commission, Washington, DC 20555–0001, Attention: Rulemakings and Adjudications Staff, or may be delivered to the Commission's

[1] The most recent version of Title 10 of the Code of Federal Regulations, published January 1, 2002, inadvertently omitted the last sentence of 10 CFR 2.714(d) and subparagraphs (d)(1) and (2), regarding petitions to intervene and contentions. For the complete, corrected text of 10 CFR 2.714(d), please see 67 FR 20884; April 20, 2002.

Public Document Room, located at One White Flint North, 11555 Rockville Pike (first floor), Rockville, Maryland, by the above date. Because of continuing disruptions in delivery of mail to United States Government offices, it is requested that petitions for leave to intervene and requests for hearing be transmitted to the Secretary of the Commission either by means of facsimile transmission to 301–415–1101 or by e-mail to *hearingdocket@nrc.gov*. A copy of the request for hearing and petition for leave to intervene should also be sent to the Office of the General Counsel, U.S. Nuclear Regulatory Commission, Washington, DC 20555–0001, and because of continuing disruptions in delivery of mail to United States Government offices, it is requested that copies be transmitted either by means of facsimile transmission to 301–415–3725 or by e-mail to *OGCMailCenter@nrc.gov*. A copy of the request for hearing and petition for leave to intervene should also be sent to Jeffrie J. Keenan, Esquire, Nuclear Business Unit—N21, P.O. Box 236, Hancocks Bridge, NJ 08038, attorney for the licensee.

Nontimely filings of petitions for leave to intervene, amended petitions, supplemental petitions and/or requests for hearing will not be entertained absent a determination by the Commission, the presiding officer or the presiding Atomic Safety and Licensing Board that the petition and/or request should be granted based upon a balancing of the factors specified in 10 CFR 2.714(a)(1)(i)–(v) and 2.714(d).

For further details with respect to this action, see the application for amendment dated December 17, 2002, which is available for public inspection at the Commission's Public Document Room (PDR), located at One White Flint North, 11555 Rockville Pike (first floor), Rockville, Maryland. Publicly available records will be accessible electronically from the Agencywide Documents Access and Management System's (ADAMS) Public Electronic Reading Room on the Internet at the NRC Web site *http://www.nrc.gov/reading-rm/adams.html.* Persons who do not have access to ADAMS or who encounter problems in accessing the documents located in ADAMS, should contact the NRC PDR Reference staff by telephone at 1–800–397–4209, 301–415–4737, or by e-mail to *pdr@nrc.gov.*

Dated at Rockville, Maryland, this 20th day of December 2002.

For the Nuclear Regulatory Commission.

Robert J. Fretz,

Project Manager, Section 2, Project Directorate I, Division of Licensing Project Management, Office of Nuclear Reactor Regulation.

[FR Doc. 02–32698 Filed 12–26–02; 8:45 am]

BILLING CODE 7590–01–P

NUCLEAR REGULATORY COMMISSION

Criteria for the Review of Alternative Sites: Meeting

AGENCY: Nuclear Regulatory Commission.

ACTION: Notice of public meeting.

SUMMARY: The Nuclear Regulatory Commission (NRC) is announcing a public meeting to obtain public input, which the agency will consider in deciding whether to undertake rulemaking to specifically define the criteria for review of candidate and alternative sites for commercial nuclear power plants. The NRC has environmental protection responsibilities under the National Environmental Policy Act (NEPA) that lead to a review of alternative sites in connection with a decision to grant an early site permit, a construction permit, or a combined operating license. In addition to environmental protection considerations pertaining to alternative sites, the meeting will cover whether and how the NRC should consider emergency planning in reviewing alternative sites.

DATES: January 28, 2003 from 9 a.m. to 5 p.m.

ADDRESSES: The public meeting will be held in the TWFN Auditorium in the NRC's headquarters at Two White Flint North, 11545 Rockville Pike, Rockville, Maryland 20852.

FOR FURTHER INFORMATION CONTACT: Lee Banic, Office of Nuclear Reactor Regulation, U.S. Nuclear Regulatory Commission, Washington DC 20555–0001, e-mail *mjb@nrc.gov*, telephone (301) 415–2771.

SUPPLEMENTARY INFORMATION:

Purpose

The purpose of the meeting is to obtain public input, which the agency will consider in deciding whether to undertake rulemaking to specifically define the criteria for review of candidate and alternative sites for commercial nuclear power plants. The NRC has environmental protection responsibilities under NEPA that lead to a review of alternative sites in connection with a decision to grant an early site permit, a construction permit, or a combined operating license. In addition to environmental protection considerations pertaining to alternative sites, the meeting will cover whether and how the NRC should consider emergency planning in reviewing alternative sites.

Participation

The meeting will be facilitated to ensure that all participants have the opportunity to share their views with the NRC staff. Members of the public who wish to speak should contact the cognizant NRC staff member listed above under the heading, **FOR FURTHER INFORMATION CONTACT** to register before the meeting. Provide your name and a telephone number where you can be contacted, if necessary, before the meeting. Depending on the number of participants, NRC may need to limit the amount of time available for presentations. Members of the public will also be able to register to speak at the meeting on a first come basis to the extent that time is available.

Background

Under NEPA, Federal agencies must study the impacts of ''major Federal actions significantly affecting the quality of the human environment'' and prepare detailed statements on the environmental impacts of a proposed action and alternatives to the proposed action. Granting an early site permit, a construction permit, or a combined operating license qualifies as a major Federal action significantly affecting the quality of the human environment. In addition, Appendix Q to 10 CFR part 50 provides a process whereby an applicant may request an early review of site suitability issues prior to submitting an application. An applicant might request an early review of alternative site issues under these provisions. Although NEPA and the NRC's regulations contain many elements that shape the NRC's environmental reviews, they do not specify in detail the nature and extent of alternative site reviews.

On April 9, 1980, the NRC published in the **Federal Register** a proposed rule to address procedures and performance criteria for considering alternative sites (45 FR 24168). On May 28, 1981, the NRC published a final rule that addressed alternative site issues in operating license proceedings (48 FR 28630). Subsequently, the agency suspended work on other aspects of the proposed rule because of reduced interest in building new nuclear power plants. More recently, on March 31, 2000, the NRC published relevant guidance in NUREG–1555,

''Environmental Standard Review Plan.'' This plan guides the NRC staff in reviewing an application for an early site permit, construction permit, or combined operating license. However, the guidance is general and not binding.

On July 18, 2001, the Nuclear Energy Institute submitted two petitions for rulemaking (Docket Nos. PRM–52–1, PRM–52–2). Among other things, PRM–52–1 requested that the NRC treat as resolved certain information (including siting information) for a proposed nuclear power plant to be built on a site of an existing licensed plant. PRM–52–2 requested elimination of the requirement to consider alternative sites for nuclear power plants. The NRC published a notice of receipt and request for comment in the **Federal Register** on September 24, 2001 (66 FR 48828). A decision on this petition has not yet been issued by the NRC.

Meeting Topics

The discussions will include the topics discussed below.

(1) Regulatory options:

(a) Maintain the status quo. In this case, the suitability of the candidate site and whether an ''obviously superior'' alternative site exists would be reviewed on a case-by-case basis, using the current Standard Review Plan as a source of general and non-binding guidance.

(b) Conduct rulemaking to specifically define the criteria for candidate and alternative site reviews. In this case, specific and binding criteria would be developed and implemented.

(c) Issue revised guidance, such as a revised Standard Review Plan. In this case, specific criteria might be developed, but they would not be binding.

(2) Criteria for candidate and alternative site reviews might take one of two broad forms. One type of criterion would focus on the sites selected by the applicant. The other type would focus on the applicant's site-selection process.

(3) The region of interest is the area from which an applicant may select candidate and alternative sites. In the past, likely areas were the State in which the applicant would locate the proposed site or the applicant's service area. Now, deregulation of the electric utility industry might affect the region of interest. In a deregulated industry, the power purchase agreements of a merchant power producer could have considerable reach. It may not be reasonable, however, to expand the region of interest to include areas at great distance from the proposed site.

(4) The review of alternative sites might be subject to a numerical limit. The 1980 proposed rule would have restricted the review to four sites (the proposed site and three alternative sites).

(5) In the past, the NRC has employed an ''obviously superior'' standard. Some of the ideas that have been suggested for making a determination on whether an alternative site is obviously superior are the following:

(a) If the proposed site is the site of an existing nuclear power plant, the search for reasonable alternatives may be restricted because it is unlikely that an alternative site would be obviously superior.

(b) If the proposed site is the site of an existing nuclear power plant and no potentially disqualifying factors are identified, no review of alternative sites should be required.

(c) The 1980 proposed rule would have indicated that the NRC would use a sequential two-part analytical test. The first part would give primary consideration to hydrology, water quality, aquatic biological resources, terrestrial resources, water and land use, socioeconomics, and population to determine whether any alternative sites are environmentally preferred to the proposed site. If such an environmentally preferred site exists, the second part would overlay consideration of project economics, technology, and institutional factors to determine whether such a site is in fact an obviously superior site.

(6) Emergency preparedness is essentially a safety topic, rather than an environmental protection consideration. However, in some circumstances emergency preparedness considerations might have an effect on the determination of whether an alternative site is obviously superior to the proposed site. For example, there might be physical characteristics unique to an alternative site that could pose a significant impediment to the development of emergency plans. Accordingly, an applicant might be required to identify any physical characteristics unique to an alternative site, such as egress limitations from the area surrounding the site, that could pose a significant impediment to the development of emergency plans, *i.e.*, similar to what is currently required for an early site permit under 10 CFR part 52.

(7) Other topics may be introduced by the participants.

The agenda schedule is as follows:

9–9:30 a.m.: Introductory Remarks
9–12 p.m.: Background and Discussion of Issues
12–1:30 p.m.: Break
1:30–5 p.m. Discussion Continued and Concluding Remarks*

*The meeting may end earlier if a full day is not needed to discuss the issues.

The Environmental Standard Review Plan, discussed above, is available for public inspection at the Commission's Public Document Room, located at One White Flint North, 11555 Rockville Pike (first floor), Rockville, Maryland. It is also accessible from the Agencywide Documents Assess and Management Systems (ADAMS) Public Electronic Reading Room on the Internet at the NRC Web site, *http://www.nrc.gov/reading-rm/adams.html* under the following ADAMS accession number: ML003702134. If you do not have access to ADAMS or if you have problems in accessing the document in Adams, contact the NRC Public Document Room (PDR) Reference Staff at 1–800–397–4209, 301–415–4737 or by e-mail to *pdr@nrc.gov*. You may obtain single copies of the document from the contact listed above under the heading **FOR FURTHER INFORMATION CONTACT.**

Dated at Rockville, Maryland, this 20th day of December, 2002.

For the Nuclear Regulatory Commission.

Brian E. Thomas,

Acting Program Director, Policy and Rulemaking Program, Division of Regulatory Improvement Programs, Office of Nuclear Reactor Regulation.

[FR Doc. 02–32697 Filed 12–26–02; 8:45 am]

BILLING CODE 7590–01–P

NUCLEAR REGULATORY COMMISSION

Advisory Committee on Reactor Safeguards Meeting of the ACRS Subcommittee on Reliability and Probabilistic Risk Assessment; Notice of Meeting

The ACRS Subcommittee on Reliability and Probabilistic Risk Assessment will hold a meeting on January 22, 2003, Room T–2B3, 11545 Rockville Pike, Rockville, Maryland.

The entire meeting will be open to public attendance.

The agenda for the subject meeting shall be as follows: *Wednesday, January 22, 2003—8:30 a.m. until 10 a.m.*

The Subcommittee will review the draft Plan for achieving coherence in regulatory safety arena. The Plan would provide an approach in which reactor regulations, staff programs, and processes are built on a unified safety concept and are properly integrated so that they complement one another. The purpose of this meeting is to gather

information, analyze relevant issues and facts, and formulate proposed positions and actions, as appropriate, for deliberation by the full Committee.

Oral statements may be presented by members of the public with the concurrence of the Subcommittee Chairman; written statements will be accepted and made available to the Committee. Persons desiring to make oral statements should notify one of the staff engineers named below five days prior to the meeting, if possible, so that appropriate arrangements can be made. Electronic recordings will be permitted only during those portions of the meeting that are open to the public.

During the initial portion of the meeting, the Subcommittee, along with any of its consultants who may be present, may exchange preliminary views regarding matters to be considered during the balance of the meeting.

The Subcommittee will then hear presentations by and hold discussions with representatives of the NRC staff and other interested persons regarding these matters.

Further information regarding topics to be discussed, whether the meeting has been canceled or rescheduled, and the Chairman's ruling on requests for the opportunity to present oral statements and the time allotted therefor can be obtained by contacting the Designated Federal Official, Mr. Sam Duraiswamy (telephone: 301–415–7364) or Mr. Michael R. Snodderly, Cognizant Staff Engineer, (telephone: 301–415–6927) between 7:30 a.m. and 4:15 p.m. (EST). Persons planning to attend this meeting are urged to contact one of the above named individuals at least two working days prior to the meeting to be advised of any potential changes to the agenda.

Dated: December 20, 2002.

Sher Bahadur,

Associate Director, for Technical Support, ACRS/ACNW.

[FR Doc. 02–32692 Filed 12–26–02; 8:45 am]

BILLING CODE 7590–01–P

NUCLEAR REGULATORY COMMISSION

Advisory Committee on Reactor Safeguards Joint Meeting of the ACRS Subcommittees on Reliability and Probabilistic Risk Assessment and on Plant Operations; Notice of Meeting

The ACRS Subcommittees on Reliability and Probabilistic Risk Assessment and on Plant Operations will hold a joint meeting on January 21, 2003, Room T–2B3, 11545 Rockville Pike, Rockville, Maryland.

The entire meeting will be open to public attendance.

The agenda for the subject meeting shall be as follows:

Tuesday, January 21, 2003—8:30 a.m. Until the Conclusion of Business

The Subcommittee will continue its discussion of activities associated with the Reactor Oversight Process (ROP), specifically staff activities to address the issues in the Staff Requirements Memorandum of December 20, 2001, in which the Commission directed that the NRC staff, with input from ACRS, should provide recommendations for resolving in a transparent manner, apparent conflicts and discrepancies between aspects of the revised ROP process that are risk-informed (*e.g.*, significance determination process) and those that are performance based (*e.g.*, performance indicators). The purpose of this meeting is to gather information, analyze relevant issues and facts, and formulate proposed positions and actions, as appropriate, for deliberation by the full Committee.

Oral statements may be presented by members of the public with the concurrence of the Subcommittee Chairman and written statements will be accepted and made available to the Subcommittees, their consultants, and staff. Persons desiring to make oral statements should notify the Designated Federal Official named below five days prior to the meeting, if possible, so that appropriate arrangements can be made. Electronic recordings will be permitted only during those portions of the meeting that are open to the public.

During the initial portion of the meeting, the Subcommittees, along with any of their consultants who may be present, may exchange preliminary views regarding matters to be considered during the balance of the meeting.

The Subcommittees will then hear presentations by and hold discussions with representatives of the NRC staff and other interested persons regarding matters scheduled for this meeting.

Further information regarding topics to be discussed, whether the meeting has been canceled or rescheduled, and the Chairman's ruling on requests for the opportunity to present oral statements and the time allotted therefor can be obtained by contacting the Designated Federal Official, Ms. Maggalean W. Weston (telephone: 301–415–3151) between 8 a.m. and 5:30 p.m. (EST). Persons planning to attend this meeting are urged to contact the above named individual at least two working days prior to the meeting to be advised of any potential changes to the agenda that may have occurred.

Dated: December 20, 2002.

Sher Bahadur,

Associate Director for Technical Support, ACRS/ACNW.

[FR Doc. 02–32693 Filed 12–26–02; 8:45 am]

BILLING CODE 7590–01–P

NUCLEAR REGULATORY COMMISSION

Advisory Committee on Reactor Safeguards Subcommittee Meeting on Safety Research Program; Notice of Meeting

The ACRS Subcommittee on Safety Research Program will hold a meeting on January 22, 2003, Room T–2B3, 11545 Rockville Pike, Rockville, Maryland.

The entire meeting will be open to public attendance.

The agenda for the subject meeting shall be as follows:

Wednesday, January 22, 2003—10 a.m. Until the Conclusion of Business

The Subcommittee will continue to discuss the ACRS 2003 report on the NRC-sponsored research programs. The purpose of this meeting is to gather information, analyze relevant issues and facts, and formulate proposed positions and actions, as appropriate, for deliberation by the full Committee.

Oral statements may be presented by members of the public with the concurrence of the Subcommittee Chairman; written statements will be accepted and made available to the Committee. Persons desiring to make oral statements should notify the Designated Federal Official named below five days prior to the meeting, if possible, so that appropriate arrangements can be made. Electronic recordings will be permitted only during those portions of the meeting that are open to the public.

During the initial portion of the meeting, the Subcommittee, along with any of its consultants who may be present, may exchange preliminary views regarding matters to be considered during the balance of the meeting.

Further information regarding topics to be discussed, whether the meeting has been canceled or rescheduled, and the Chairman's ruling on requests for the opportunity to present oral statements and the time allotted therefor can be obtained by contacting the Designated Federal Official, Dr. Richard P. Savio (telephone 301/415–7363)

between 7:30 a.m. and 4:15 p.m. (EST). Persons planning to attend this meeting are urged to contact the above named individual at least two working days prior to the meeting to be advised of any potential changes in the proposed agenda.

Dated: December 19, 2002.

Sher Bahadur,

Associate Director for Technical Support, ACRS/ACNW.

[FR Doc. 02–32694 Filed 12–26–02; 8:45 am]

BILLING CODE 7590–01–P

NUCLEAR REGULATORY COMMISSION

Advisory Committee on Reactor Safeguards Meeting of the ACRS Subcommittee on Reliability and Probabilistic Risk Assessment; Notice of Meeting

The ACRS Subcommittee on Reliability and Probabilistic Risk Assessment will hold a meeting on January 23–24, 2003, Room T–2B3, 11545 Rockville Pike, Rockville, Maryland.

The entire meeting will be open to public attendance.

The agenda for the subject meeting shall be as follows:

Thursday, January 23, 2003—8:30 a.m. Until the Conclusion of Business

The Subcommittee will meet with representatives of the Westinghouse Electric Company and members of the NRC staff to review the Probabilistic Risk Assessment for the AP1000 passive plant design.

Friday, January 24, 2003—8:30 a.m. Until the Conclusion of Business

The Subcommittee will continue its discussion of the AP1000 Probabilistic Risk Assessment, including fire, low power and shutdown, and external event risk assessments.

The purpose of this meeting is to gather information, analyze relevant issues and facts, and formulate proposed positions and actions, as appropriate, for deliberation by the full Committee.

Oral statements may be presented by members of the public with the concurrence of the Subcommittee Chairman; written statements will be accepted and made available to the Committee. Persons desiring to make oral statements should notify one of the staff engineers named below five days prior to the meeting, if possible, so that appropriate arrangements can be made. Electronic recordings will be permitted only during those portions of the meeting that are open to the public.

During the initial portion of the meeting, the Subcommittee, along with any of its consultants who may be present, may exchange preliminary views regarding matters to be considered during the balance of the meeting.

The Subcommittee will then hear presentations by and hold discussions with representatives of the NRC staff, Westinghouse Electric Company, and other interested persons regarding these matters.

Further information regarding topics to be discussed, whether the meeting has been canceled or rescheduled, and the Chairman's ruling on requests for the opportunity to present oral statements and the time allotted therefor can be obtained by contacting the Designated Federal Official, Dr. Medhat M. El-Zeftawy (telephone: 301–415–6889) or Mr. Michael R. Snodderly, Cognizant Staff Engineer, (telephone: 301–415–6927) between 7:30 a.m. and 4:15 p.m. (EST). Persons planning to attend this meeting are urged to contact one of the above named individuals at least two working days prior to the meeting to be advised of any potential changes to the agenda.

Dated: December 20, 2002.

Sher Bahadur,

Associate Director for Technical Support, ACRS/ACNW.

[FR Doc. 02–32695 Filed 12–26–02; 8:45 am]

BILLING CODE 7590–01–P

NUCLEAR REGULATORY COMMISSION

Announcement of Public Meeting on Proposed Plan to Risk-Inform Post-Fire Safe-Shutdown Circuit Analysis Inspection

AGENCY: Nuclear Regulatory Commission.

ACTION: Notice of meeting.

SUMMARY: The Nuclear Regulatory Commission (NRC) will hold a public meeting, in the form of a facilitated workshop, to discuss and gather stakeholder input on proposed risk-informed post-fire safe-shutdown circuit analysis inspection.

DATES: February 19, 2003, 9 a.m. to 4:45 p.m.

ADDRESSES: The meeting will be held at the Nuclear Regulatory Commission, Two White Flint North, Auditorium, 11545 Rockville Pike, Rockville, Maryland 20852.

Referenced documents are available for review in ADAMS, NRC's online document management system at *http://www.nrc.gov* or from the NRC's Public Document Room (PDR), www.pdr.gov, 1–800–397–4209 or 301–415–4737, located on the first floor of One White Flint North, 11555 Rockville Pike, Rockville, MD 20852. Referenced documents and their Accession Nos. are: NRC Information Notice 99–17, ''Problems Associated with Post-Fire Safe-Shutdown Circuit Analyses,'' (ADAMS Accession No. ML023510114); Enforcement Guidance Memorandum EGM–98–002, Revision 2, (ADAMS Accession No. ML003710123); Memorandum dated, 11/29/2000, ''Rationale for Temporarily Halting Certain Associated Circuits Inspection Lines of Inquiry During Fire Protection Baseline Triennial Inspections,'' (ADAMS Accession No. ML003773142); Draft Revision D of NEI 00–01, ''Guidance for Post-Fire Safe Shutdown Analysis, 10–15–2002,'' (ADAMS Accession No. ML023010376); Draft NUREG/CR, ''Guidance for Post Fire Safe Shutdown Analysis,'' (ADAMS Accession No. ML023430533).

FOR FURTHER INFORMATION CONTACT: Joseph Birmingham, Mail Stop O–11F1, Office of Nuclear Reactor Regulation, U.S. Nuclear Regulatory Commission, Washington, DC 20555–0001, Telephone: 1–800–368–5642, extension 2829, or e-mail *jlb4@nrc.gov.*

SUPPLEMENTARY INFORMATION: Beginning in 1997, the NRC noticed a number of Licensee Event Reports (LERs) that identified plant specific problems related to potential fire induced electrical circuit failures that could prevent operation or cause mal-operation of equipment necessary to achieve and maintain post-fire safe shutdown. LERs identified problems involving Associated Circuits, Cable Routing, Redundant Train Separation, Wiring Errors, Fire-Induced Hot Shorts, Evaluations of Spurious Operations, Motor Operated Valve Evaluations, Transfer and Isolation Capability, Fuse/Breaker Coordination, High Impedance Faults, High-Pressure/Low-Pressure Interfaces (See NRC Information Notice 99–17 for more information) (Agencywide Documents Access and Management System (ADAMS) Accession No. ML023510114). On November 29, 2000, a memorandum was written that outlined the rationale for halting certain associated circuits inspections while the industry worked to resolve the issue (ADAMS Accession No. ML003773142).

In response to this issue, the Nuclear Energy Institute (NEI), with support from the Boiling Water Reactor Owners Group (BWROG), formed a circuit

analysis issue task force. As part of this task force's efforts, a series of cable fire tests were performed. The results of these tests were reviewed by a panel of technical experts and their work was assembled by a technical integrator into a coherent overall evaluation. The final report, ''Spurious Actuation of Electrical Circuits Due to Cable Fires: Results of an Expert Elicitation,'' was issued by the Electric Power Research Institute (EPRI) in May 2002 (Report No. 1006961). EPRI also developed a document titled, ''Characterization of Fire-Induced Circuit Faults, Results of Cable Fire Testing,'' December 2002 (Report No. 1003326), that provides the results of the EPRI/NEI initiative examining circuit failures. These EPRI reports are EPRI Licensed Material and are available through EPRI, www.epri.com. (a fee may be applicable).

NEI has also been preparing a guidance document for a risk based evaluation method as part of the industry initiative. This document is currently in Draft Revision D, NEI 00–01, ''Guidance for Post-Fire Safe Shutdown Analysis, 10/15/2002'' (ADAMS Accession No. ML023010376).

The NRC has contracted with Brookhaven National Laboratory to develop a NUREG/CR that will assemble all NRC positions concerning post-fire safe-shutdown circuit analysis into one source document. A preliminary draft copy is being made available for purposes of this meeting (ADAMS Accession No. ML023430533). The NUREG/CR will also identify successful strategies used by licensees and identify how risk-informed techniques can be used to inspect this program area.

The purpose of this workshop is to identify: (1) The most risk significant associated circuit configurations for inspection so the Enforcement Guidance Memorandum (EGM) EGM–98–002 (ADAMS Accession No. ML003710123) may be withdrawn and inspections resumed in a risk-informed manner, (2) other associated circuit configurations that require further research before focusing inspection in these areas, and (3) the least risk significant associated circuit configurations so that inspection resources will not be expended on low risk/small consequence items. The meeting may gather other information and serve as a vehicle for members of the public to express concerns and to provide advice.

The facilitated workshop will be conducted in a ''roundtable'' format to encourage a dialogue on the safe shutdown circuit analysis issues among the broad spectrum of stakeholders affected by and concerned about these issues. To have a manageable discussion, the number of participants around the table will, of necessity, be limited. Other members of the public are welcome to attend, and will be given the opportunity to comment on each agenda item to be discussed by the roundtable participants. All questions regarding participation should be directed to the workshop facilitator, Francis ''Chip'' Cameron by phone at 301–415–1642 or e-mail *fxc@nrc.gov.*

If participants need to provide more detailed explanations than time in the workshop permits, written comments may be delivered before or up to 10 days after the workshop to Joseph Birmingham, MS 11F1, One White Flint North, 11555 Rockville Pike, Rockville, Maryland, from 7:30 a.m. to 4:15 p.m. Federal workdays. Electronic comments may be submitted to the NRC by e-mail to *jlb4@nrc.gov* for consideration by the NRC staff.

All comments received by the Commission, including those made by Federal, State, and local agencies, Indian tribes, or other interested persons, will be made available electronically at the Commission's PDR in Rockville, Maryland, and from the Public Access Record System (PARS) component of ADAMS.

Persons may pre-register to attend the facilitated workshop by contacting Joseph Birmingham (see **FOR FURTHER INFORMATION CONTACT**). Individual oral comments will be limited by the time available and at the discretion of the facilitator. If special equipment or accommodations are needed to attend or present information at the public meeting, the need should be brought to Mr. Birmingham's attention no later than February 1, 2003, to provide the NRC time to determine whether the request can be accommodated.

Members of the public may register to attend or present oral comments at this workshop by contacting Mr. Birmingham, no later than January 15, 2003. Those who wish to make comments may also register outside the Public Meeting Room within 15 minutes of the start of the meeting. Individual oral comments may be limited by the time available, depending on the number of persons who register. Participants who do not have adequate time to fully express their views during the workshop may submit written comments to Mr. Birmingham up to 10 days following the meeting.

Dated at Rockville, Maryland, this 20th day of December 2002.

For the Nuclear Regulatory Commission.

John N. Hannon,

Chief, Plant Systems Branch, Division of Systems Safety and Analysis, Office of Nuclear Reactor Regulation.

[FR Doc. 02–32699 Filed 12–26–02; 8:45 am]

BILLING CODE 7590–01–P

NUCLEAR WASTE TECHNICAL REVIEW BOARD

Notice of Meeting

Board Meeting: January 28, 2003—Las Vegas, Nevada: The Nuclear Waste Technical Review Board will hold a meeting to discuss DOE technical and scientific activities related to the proposed development of a repository for spent nuclear fuel and high-level radioactive waste disposal at Yucca Mountain, Nevada. Issues to be discussed include the Yucca Mountain science program, materials testing, and barrier analyses.

Pursuant to its authority under section 5051 of Public Law 100–203, Nuclear Waste Policy Amendments Act of 1987, on Tuesday, January 28, 2003, the Nuclear Waste Technical Review Board (Board) will meet in Las Vegas, Nevada, to discuss U.S. Department of Energy (DOE) technical and scientific activities related to a proposed repository for spent nuclear fuel and high-level radioactive waste at Yucca Mountain, Nevada. The meeting is open to the public, and opportunities for public comment will be provided. The Board is charged by Congress with reviewing the technical and scientific validity of DOE activities related to managing spent nuclear fuel and high-level radioactive waste.

The Board meeting will be held at the Crowne Plaza Hotel; 4255 South Paradise Road; Las Vegas, Nevada 89109. The telephone number is (702) 369–4400; the fax number is (702) 369–4330. The meeting will start at 8 a.m.

Following the call to order and introductory statements, a general overview of the DOE program and a briefing on the Yucca Mountain project will be presented. The DOE will then discuss its plans related to operating a waste management system, including waste acceptance, packaging, transportation, repackaging, and emplacement. This presentation will be followed by an update on the DOE's science and engineering activities. After lunch, a contractor for the State of Nevada will present a status report on state-sponsored corrosion studies, and the DOE will update the Board on its materials testing activities, followed by a presentation on waste package

manufacturing and closure welds. That presentation will be followed by discussions of barrier analyses.

Two public comment periods have been scheduled: a short period just before lunch for those who are unable to attend the entire meeting and a second session at the end of the day. Those wanting to speak during the public comment periods are encouraged to sign the ''Public Comment Register'' at the check-in table. A time limit may have to be set on individual remarks, but written comments of any length may be submitted for the record.

A detailed agenda will be available approximately one week before the meeting. Copies of the agenda can be requested by telephone or obtained from the Board's Web site at *http://www.nwtrb.gov.* Beginning on March 2, 2003, transcripts of the meeting will be available on the Board's Web site, via e-mail, on computer disk, and on a library-loan basis in paper format from Davonya Barnes of the Board staff.

A block of rooms has been reserved at the Crowne Plaza. Reservations must be made by January 10, 2003, to obtain the meeting rate. When making a reservation, please state that you are attending the Nuclear Waste Technical Review Board meeting. For more information, contact the NWTRB; Karyn Severson, External Affairs; 2300 Clarendon Boulevard, Suite 1300; Arlington, VA 22201–3367; telephone 703–235–4473; fax 703–235–4495; or by ''contact form'' at *http://www.nwtrb.gov.*

The Nuclear Waste Technical Review Board was created by Congress in the Nuclear Waste Policy Amendments Act of 1987. The Board's purpose is to evaluate the technical and scientific validity of activities undertaken by the Secretary of Energy related to disposal of the nation's spent nuclear fuel and high-level radioactive waste. In the same legislation, Congress directed the DOE to characterize a site at Yucca Mountain, Nevada, to determine its suitability as the location of a potential repository for permanently disposing of spent nuclear fuel and high-level radioactive waste.

Dated: December 20, 2002.

William D. Barnard,

Executive Director, Nuclear Waste Technical Review Board.

[FR Doc. 02–32633 Filed 12–26–02; 8:45 am]

BILLING CODE 6820–AM–M

SECURITIES AND EXCHANGE COMMISSION

[Release No. IC–25871]

Notice of Applications for Deregistration Under Section 8(f) of the Investment Company Act of 1940

December 20, 2002.

The following is a notice of applications for deregistration under section 8(f) of the Investment Company Act of 1940 for the month of December, 2002. A copy of each application may be obtained for a fee at the SEC's Public Reference Branch, 450 Fifth St., NW., Washington, DC 20549–0102 (tel. 202–942–8090). An order granting each application will be issued unless the SEC orders a hearing. Interested persons may request a hearing on any application by writing to the SEC's Secretary at the address below and serving the relevant applicant with a copy of the request, personally or by mail. Hearing requests should be received by the SEC by 5:30 p.m. on January 16, 2003, and should be accompanied by proof of service on the applicant, in the form of an affidavit or, for lawyers, a certificate of service. Hearing requests should state the nature of the writer's interest, the reason for the request, and the issues contested. Persons who wish to be notified of a hearing may request notification by writing to the Secretary, SEC, 450 Fifth Street, NW., Washington, DC 20549–0609. For Further Information Contact: Diane L. Titus at (202) 942–0564, SEC, Division of Investment Management, Office of Investment Company Regulation, 450 Fifth Street, NW., Washington, DC 20549–0506.

Principal Partners LargeCap Growth Fund, Inc. [File No. 811–9757], Principal European Equity Fund, Inc. [File No. 811–9801], Principal Pacific Basin Fund, Inc. [File No. 811–9803]

Summary: Each applicant seeks an order declaring that it has ceased to be an investment company. By October 31, 2002, each applicant had transferred its assets to Principal International Fund, Inc., based on net asset value. Expenses of $42,721, $3,314 and $3,314, respectively, incurred in connection with the reorganizations and were paid by Principal Management Corporation, investment adviser to each applicant.

Filing Date: The applications were filed on November 22, 2002, and amended on December 17, 2002.

Applicants' Address: The Principal Financial Group, 711 High St., Des Moines, IA 50392–0200.

Stockback Fund [File No. 811–9587]

Summary: Applicant seeks an order declaring that it has ceased to be an investment company. On April 16, 2002, applicant made a liquidating distribution to its shareholders, based on net asset value. Expenses of $11,450 incurred in connection with the liquidation were paid by Stockback Holdings, Inc. on behalf of Stockback Advisers, LLC, applicant's investment adviser.

Filing Dates: The application was filed on November 18, 2002, and amended on December 13, 2002.

Applicant's Address: 11 Broadway, 17th Floor, New York, NY 10004.

Waddell & Reed Advisors Municipal Money Market Fund, Inc. [File No. 811–10137]

Summary: Applicant seeks an order declaring that it has ceased to be an investment company. On May 2, 2002, applicant made a liquidating distribution to its shareholders, based on net asset value. Expenses of $15,590 incurred in connection with the liquidation were paid by Waddell & Reed, Inc., applicant's underwriter and distributor.

Filing Date: The application was filed on November 26, 2002.

Applicant's Address: 6300 Lamar Ave., Overland Park, KS 66202.

FirstMerit Funds [File No. 811–6224]

Summary: Applicant seeks an order declaring that it has ceased to be an investment company. On August 16, 2002, applicant transferred its assets to Federated Capital Appreciation Fund and Automated Government Cash Reserves, based on net asset value. Applicant incurred no expenses in connection with the reorganization.

Filing Dates: The application was filed on November 5, 2002, and amended on December 6, 2002.

Applicant's Address: Federated Investors Tower, 5800 Corporate Dr., Pittsburgh, PA 15237–7010.

LMCG Funds [File No. 811–10069]

Summary: Applicant seeks an order declaring that it has ceased to be an investment company. On August 29, 2002, applicant made a final liquidating distribution to its shareholders, based on net asset value. Expenses of $5,000 incurred in connection with the liquidation were paid by Lee Munder Investments Ltd., applicant's investment adviser.

Filing Date: The application was filed on November 19, 2002.

Applicant's Address: 60 State St., Suite 1300, Boston, MA 02109.

Glen Rauch Buy-Write Fund [File No. 811–10175]

Summary: Applicant seeks an order declaring that it has ceased to be an investment company. On December 28, 2001, applicant made a liquidating distribution to its shareholders, based on net asset value. Applicant incurred no expenses in connection with the liquidation.

Filing Date: The application was filed on November 19, 2002.

Applicant's Address: 44 Wall St., New York, NY 10005.

Oppenheimer Multi-Cap Value Fund I [File No. 811–10259]

Summary: Applicant seeks an order declaring that it has ceased to be an investment company. Applicant has never made a public offering of its securities and does not propose to make a public offering or engage in business of any kind.

Filing Dates: The application was filed on October 18, 2002, and amended on November 25, 2002.

Applicant's Address: OppenheimerFunds, Inc., 6803 Tucson Way, Englewood, CO 80112.

Nuveen Multistate Tax-Free Trust [File No. 811–6435]

Summary: Applicant seeks an order declaring that it has ceased to be an investment company. On January 31, 1997, each series of applicant transferred its assets to a corresponding series of Nuveen Flagship Multistate Trust I, Nuveen Flagship Multistate Trust II, or Nuveen Flagship Multistate Trust IV, based on net asset value. Expenses of $277,595 incurred in connection with the reorganization were paid by applicant, and Nuveen Advisory Corp. and Flagship Financial Inc., the investment advisers of applicant and the acquiring funds, respectively.

Filing Dates: The application was filed on July 19, 2002, and amended on November 21, 2002.

Applicant's Address: 333 West Wacker Dr., Chicago, IL 60606.

Nuveen Insured Tax-Free Bond Fund, Inc. [File No. 811–4821]

Summary: Applicant seeks an order declaring that it has ceased to be an investment company. On January 31, 1997, each series of applicant transferred its assets to a corresponding series of Nuveen Flagship Municipal Trust or Nuveen Flagship Multistate Trust II, based on net asset value. Expenses of $225,430 incurred in connection with the reorganization were paid by applicant.

Filing Dates: The application was filed on July 19, 2002, and amended on November 21, 2002.

Applicant's Address: 333 West Wacker Dr., Chicago, IL 60606.

Nuveen Insured Premium Income Municipal Fund, Inc. [File No. 811–7130]

Summary: Applicant, a closed-end investment company, seeks an order declaring that it has ceased to be an investment company. On September 9, 1996, applicant transferred its assets to Nuveen Insured Premium Income Municipal Fund 2, based on net asset value. Applicant's shareholders who held preferred stock received one share of preferred stock of the acquiring fund for each share of applicant's preferred stock. Expenses of $657,613 incurred in connection with the reorganization were paid by applicant and the acquiring fund.

Filing Dates: The application was filed on July 19, 2002, and amended on November 21, 2002.

Applicant's Address: 333 West Wacker Dr., Chicago, IL 60606.

Nuveen Municipal Bond Fund [File No. 811–2692]

Summary: Applicant seeks an order declaring that it has ceased to be an investment company. On January 31, 1997, applicant transferred its assets to a series of Nuveen Flagship Municipal Trust, based on net asset value. Expenses of $530,658 incurred in connection with the reorganization were paid by applicant.

Filing Dates: The application was filed on July 19, 2002, and amended on November 21, 2002.

Applicant's Address: 333 West Wacker Dr., Chicago, IL 60606.

Nuveen Tax-Free Bond Fund, Inc. [File No. 811–4817]

Summary: Applicant seeks an order declaring that it has ceased to be an investment company. On January 31, 1997, each series of applicant transferred its assets to a corresponding series of Nuveen Flagship Multistate Trust II or Nuveen Flagship Multistate Trust IV, based on net asset value. Expenses of $281,910 incurred in connection with the reorganization were paid by applicant, and Nuveen Advisory Corp. and Flagship Financial Inc., the investment advisers of applicant and the acquiring funds, respectively.

Filing Dates: The application was filed on July 19, 2002, and amended on November 21, 2002.

Applicant's Address: 333 West Wacker Dr., Chicago, IL 60606.

Flagship Tax Exempt Funds Trust [File No. 811–4263]

Summary: Applicant seeks an order declaring that it has ceased to be an investment company. On November 1, 1997, each series of applicant transferred its assets to a corresponding series of Nuveen Flagship Multistate Trust I, Nuveen Flagship Multistate Trust II, Nuveen Flagship Multistate Trust III, Nuveen Flagship Multistate Trust IV, or Nuveen Flagship Municipal Trust, based on net asset value. Expenses of $1,202,000 incurred in connection with the reorganization were paid by applicant, and Flagship Financial Inc. and Nuveen Advisory Corp., the investment advisers of applicant and the acquiring funds, respectively.

Filing Dates: The application was filed on July 19, 2002, and amended on November 21, 2002.

Applicant's Address: 333 West Wacker Dr., Chicago, IL 60606.

Franklin Government Securities Trust [File No. 811–5709]

Summary: Applicant seeks an order declaring that it has ceased to be an investment company. On November 26, 1997, applicant made a liquidating distribution to its shareholders based on net asset value. Applicant incurred no expenses in connection with the liquidation.

Filing Dates: The application was filed on May 18, 2001 and amended and restated on September 24, 2002.

Applicant's Address: One Franklin Parkway, San Mateo, CA 94403–1906

For the Commission, by the Division of Investment Management, pursuant to delegated authority.

Margaret H. McFarland,

Deputy Secretary.

[FR Doc. 02–32791 Filed 12–26–02; 8:45 am]

BILLING CODE 8010–01–P

SECURITIES AND EXCHANGE COMMISSION

[Release No. 34–47028; File No. 4–429]

Joint Industry Plan; Notice of Filing of Joint Amendment No. 4 to the Options Intermarket Linkage Plan Relating to Satisfaction Orders, Trade-Throughs and Other Nonsubstantive Changes

December 18, 2002.

Pursuant to Section 11A of the Securities Exchange Act of 1934 (''Act'')[1] and Rule 11Aa3–2 thereunder,[2] notice is hereby given that

[1] 15 U.S.C. 78k–1.

[2] 17 CFR 240.11Aa3–2.

on September 24, 2002, October 1, 2002, October 9, 2002, November 6, 2002, and November 26, 2002, the International Stock Exchange, Inc. (''ISE''), the Pacific Exchange, Inc. (''PCX''), the Chicago Board Options Exchange, Inc. (''CBOE''), the Philadelphia Stock Exchange, Inc. (''Phlx''), and the American Stock Exchange LLC (''Amex'') (collectively, the ''Participants''), respectively, filed with the Securities and Exchange Commission (''SEC'' or ''Commission'') an amendment (''Joint Amendment No. 4'') to the Options Intermarket Linkage Plan (''Linkage Plan'').[3]

In proposed Joint Amendment No. 4, the Participants propose to limit the liability for trade-throughs for the last seven minutes of the trading day to the filling of 10 contracts per exchange, per transaction. The proposed Linkage Plan Amendment also would: (1) Decrease the time period a member must wait after sending a linkage order to a market before that member can trade through that market from 30 seconds to 20 seconds; (2) prohibit linkage fees for executing satisfaction orders; and (3) make other nonsubstantive revisions to the Linkage Plan. The Commission is publishing this notice to solicit comments from interested persons on proposed Joint Amendment No. 4 to the Linkage Plan.

I. Description and Purpose of the Proposed Amendment

The primary purpose of proposed Joint Amendment No. 4 is to effect three substantive changes to the Linkage Plan. In addition, the proposed amendment corrects a typographical error in the Linkage Plan, makes a technical change to the requirements for Linkage orders, changes the name of one Participant and the address of another Participant.

First, the proposed amendment would establish special provisions for filling Satisfaction Orders (as defined in the Linkage Plan) during the final seven minutes of the trading day. The Participants represent that as they have worked towards implementing the Linkage, members of various exchanges have raised concerns regarding their obligation to fill Satisfaction Orders (which result after a trade-through) at the close of trading in the underlying security. Specifically, these members are concerned that they may not have time to hedge the positions they acquire.[4] Thus, the Participants propose to limit liability for trade-throughs for the last five minutes of the trading day in the underlying security to the filling of 10 contracts per exchange, per transaction. The Participants believe this proposal will protect small customer orders, yet establish a reasonable limit for their members' liability. The Participants represent this proposal will not affect a member's potential liability under an exchange's disciplinary rule for engaging in a pattern or practice of trading through other markets under Section 8(c)(i)(C) of the Linkage Plan.

Second, the proposed amendment would reduce the amount of time a member must wait after sending a Linkage order to a market before that member can trade through that market. Specifically, the Participants propose to decrease this time period from 30 seconds to 20 seconds. The Linkage Plan will retain the requirement that a Participant respond to a Linkage order within 15 seconds of receipt of that order.[5]

Finally, the Participants propose to establish a general prohibition against Linkage fees for executing Satisfaction Orders. While each Participant will be able to propose non-discriminatory fees for Principal and Principal Acting as Agent Orders (as defined in the Linkage Plan), the Participants do not believe it would be appropriate to charge a fee for Satisfaction Orders. An exchange will receive a Satisfaction Order only when it has traded through customer orders on another exchange. The Participants see no basis to allow an exchange that traded through another market to impose a fee on the aggrieved party to satisfy that party's customers.

II. Implementation of the Plan Amendment

The Participants propose to make the proposed amendment to the Linkage Plan reflected in this filing effective when the Commission approves the amendment.

III. Solicitation of Comments

Interested persons are invited to submit written data, views, and arguments concerning the foregoing, including whether the proposed Linkage Plan amendment is consistent with the Act. Persons making written submissions should file six copies thereof with the Secretary, Securities and Exchange Commission, 450 Fifth Street, NW, Washington DC 20549–0609. Copies of the submissions, all subsequent amendments, all written statements with respect to the proposed Linkage Plan amendment that are filed with the Commission, and all written communications relating to the proposed Linkage Plan amendment between the Commission and any person, other than those that may be withheld from the public in accordance with the provisions of 5 U.S.C. 552, will be available for inspection and copying at the Commission's Public Reference Room. Copies of such filings will also be available for inspection and copying at the principal offices of the Amex, CBOE, ISE, Phlx, and PCX. All submissions should refer to File No. 4–429 and should be submitted by January 17, 2003.

For the Commission, by the Division of Market Regulation, pursuant to delegated authority.[6]

J. Lynn Taylor,

Assistant Secretary.

[FR Doc. 02–32643 Filed 12–26–02; 8:45 am]

BILLING CODE 8010–01–P

[3] On July 28, 2000, the Commission approved a national market system plan for the purpose of creating and operating an intermarket options market linkage (''Linkage'') proposed by Amex, CBOE, and ISE. *See* Securities Exchange Act Release No. 43086 (July 28, 2000), 65 FR 48023 (August 4, 2000). Subsequently, Phlx and PCX joined the Linkage Plan. *See* Securities Exchange Act Release Nos. 43573 (November 16, 2000), 65 FR 70850 (November 28, 2000) and 43574 (November 16, 2000), 65 FR 70851 (November 28, 2000). On June 27, 2001 and May 30, 2002, respectively, the Commission approved amendments to the Linkage Plan. *See* Securities Exchange Act Release Nos. 44482 (June 27, 2001), 66 FR 35470 (July 5, 2001) and 46001 (May 30, 2002), 67 FR 38687 (June 5, 2002).

[4] *See* letter from Michael Simon, Senior Vice President and General Counsel, ISE, to Annette Nazareth, Director, Division of Market Regulation, Commission, dated November 19, 2002.

[5] However, because the Linkage is highly automated and an exchange should receive a response to a Linkage Order within a second after it is sent, the Participants do not believe it is necessary to wait 15 seconds for such a response. Especially in fast-moving markets like the options market, the Participants believe that waiting five seconds for the response will provide an opportunity for the transmittal of responses to orders, while also allowing their members to execute orders on their own exchanges in a timely manner.

[6] 17 CFR 200.30–3(a)(29).

SECURITIES AND EXCHANGE COMMISSION

[Release No. 34–47061; File No. 600–19]

Philadelphia Depository Trust Company; Notice of Request for Comment and Order Granting Request for Withdrawal from and Cancellation of Registration as Clearing Agency

December 20, 2002.

On September 23, 1983, pursuant to Section 17A of the Securities Exchange Act of 1934 (Exchange Act)[1] and Rule 17Ab2–1,[2] the Securities and Exchange Commission (Commission) registered

[1] 15 U.S.C. 78q–1.

[2] 17 CFR 240.17Ab2–1.

the Philadelphia Depository Trust Company (Philadep) as a clearing agency.[3] Philadep is a wholly-owned subsidiary of the Philadelphia Stock Exchange, Inc. (Phlx). As a regional depository facility and limited purpose trust company organized under the laws of Pennsylvania, it offered its participants, among other services, automated, book-entry transfer of securities positions, vault facilities, and securities lending services.[4]

On June 18, 1997, Philadep, Phlx, the Stock Clearing Corporation of Philadelphia (SCCP),[5] the National Securities Clearing Corporation (NSCC) and The Depository Trust Company (DTC) entered into an Agreement in connection with Philadep's withdrawal from the securities depository business and SCCP's restructured and limited clearance and settlement business. In the Agreement, Philadep and SCCP agreed to certain provisions, including that: (i) Philadep would cease providing securities depository services; (ii) SCCP would make available to its participants access to the facilities of one or more other organizations providing depository services; (iii) SCCP would make available to SCCP participants access to the facilities of one or more other organizations providing securities clearing services; and (iv) SCCP would transfer to the books of such other organizations the CNS system open positions of SCCP participants on the books of SCCP. On August 11, 1997, the Commission instituted public administrative and cease-and-desist proceedings pursuant to Sections 19(h) and 21C of the Exchange Act against Philadep and SCCP (Administrative Order).[6] On December 11, 1997, the Commission approved a proposed rule change which gave effect to the Agreement and which reflected Philadep's withdrawal from the depository business and SCCP's restructured and limited clearance and settlement business.[7]

In a letter dated October 1, 2002, Philadep requested that the Commission permit Philadep to withdraw its registration as a clearing agency.[8] Philadep stated that its request for withdrawal of its clearing agency registration was being made pursuant to the remedial sanctions imposed in the Order Instituting Administrative Proceedings. Philadep requested that its withdrawal as a registered clearing agency be made effective as of December 31, 2002, in order to coincide with its dissolution as a trust company under the laws of the Commonwealth of Pennsylvania.

As a condition of Philadep's withdrawal as a registered clearing agency, Phlx represents that it will ''maintain all documents, books and records in Philadep's possession as required by Rule 17a–1 under the Exchange Act for a period of 5 years following the Effective Date [of the cancellation of Philadep's registration as a clearing agency].'' [9] In addition, Phlx represents that all known outstanding claims against Philadep as of the effective date of its withdrawal will have been researched and, where appropriate, paid.[10]

Philadep represents that it has been diligent and thorough in researching and where appropriate has paid, all known outstanding claims. Philadep has represented that it has sent letters to all former Philadep participants and known creditors giving notice of its dissolution and that notice of the dissolution was published in the Philadelphia Daily News and the Legal Intelligencer.[11]

Section 19(a)(3) of the Exchange Act provides in part that a self-regulatory organization may ''withdraw from registration by filing a written notice of withdrawal with the Commission.'' Section 19(a)(3) also provides that in the event any self-regulatory organization is no longer in existence or has ceased to do business in the capacity specified in its application for registration, ''the Commission, by order, shall cancel its registration.'' Based upon representations made by Philadep to the Commission and based upon the undertakings discussed herein, the Commission has determined that granting Philadep's request for withdrawal from registration would be consistent with the requirements of the Act. Furthermore, because Philadep has ceased to do business in the capacity specified in their registration application, the Commission is canceling its registration effective December 31, 2002.

The Commission believes that it is appropriate as a part of this registration cancellation to require Phlx to comply in substance with the recordkeeping provisions of Rule 17a–1(a) with respect to the records of Philadep.[12] Specifically, Phlx, as it has consented to do, will maintain all documents, books, and records (collectively records) which are required to be maintained under Rule 17a–1(a) and which are in Philadep's possession, will produce such records at the request of any representative of the Commission, and will maintain such records for a period of 5 years from the effective date of the cancellation of Philadep's registration as a clearing agency.

The Commission believes that it would be appropriate and consistent with the policies expressed in Section 19 to notify interested persons about and to solicit public comment concerning the cancellation of Philadep's registration as a clearing agency. To assist the Commission in determining whether it should allow the cancellation to become effective as set forth in this order or whether it should modify this order, interested persons are invited to submit, until December 30, 2002, written data, views, and arguments concerning this order and the undertakings discussed herein. Comments should be submitted in triplicate to Jonathan G. Katz, Secretary, Securities and Exchange Commission, 450 5th Street, NW, Washington, DC

[3] Securities Exchange Act Release No. 20221 (September 23, 1983), 48 FR 45167 (October 3, 1983).

[4] *Id.* at 45173.

[5] SCCP is also a wholly-owned subsidiary of the Phlx. It is also registered as a clearing agency with the Commission.

[6] Among other things, the Administrative Order required Philadep to file a Section 19(b) proposed rule change describing its withdrawal from the securities depository business and to file with the Commission a request to withdraw its clearing agency registration. Securities Exchange Act Release Nos. 38918 (August 11, 1997), (Administrative Proceeding File No. 3–9360); 39644 (February 11, 1998), (Administrative Proceeding File No. 3–9360) (Order modifying August 11, 1997, Order).

[7] Securities Exchange Act Release No. 39444 (December 11, 1997), 62 FR 66703 (December 19, 1997).

[8] Letter from Meyer S. Frucher, Chairman, Philadep, and Chairman, Phlx, to Jerry Carpenter, Assistant Director, Division of Market Regulation, Commission. (October 1, 2002).

[9] *Id.*

[10] In connection with Philadep's voluntary plan of dissolution, Philadep and Phlx entered into an Assumption and Guarantee Agreement dated February 21, 2001, whereby Phlx assumes certain obligations and liabilities of Philadep. As part of Philadep's request for withdrawal as a registered clearing agency, Phlx has reaffirmed to the Commission its undertakings under the Assumption and Guarantee Agreement.

[11] E-mail from Murray L. Ross, Vice President and Secretary, Philadep, SCCP, and Phlx, to Jerry Carpenter, Assistant Director, Division of Market Regulation, Commission. (December 12, 2002).

[12] Exchange Act Rule 17a–1 requires a clearing agency to: (1) ''Keep and preserve at least one copy of all documents, including all correspondence, memoranda, papers, books, notices, accounts, and other such records as shall be made or received by it in the course of its business as such and in the conduct of its self-regulatory activity;'' (2) ''keep all such documents for a period of not less than five years, the first two years in an easily accessible place;'' and (3) ''upon request of any representative of the Commission, promptly furnish to the possession of such representative copies of any documents required to be kept and preserved by it. * * *'' 17 CFR 240.17a–1.

20549–0609. Comments may also be submitted electronically at the following e-mail address: *rule-comments@sec.gov.* All comment letters should refer to File No. 600–19. This file number should be included on the subject line if e-mail is used. Comment letters will be available for public inspection and copying in the Commission's Public Reference Room, 450 5th Street, NW, Washington, DC. Electronically submitted comment letters also will be posted on the Commission's Web site (*http://www.sec.gov*).[13]

It is therefore ordered that:

(1) Effective December 31, 2002, Philadep's registration as a clearing agency under Section 17A of the Exchange Act and Rule 17Ab2–1 thereunder is terminated and

(2) Phlx for a period of 5 years from the effective date of the termination of Philadep's registration as a clearing agency will maintain all the records required to be maintained pursuant to Rule 17a–1(a) which are in Philadep's possession and will produce such records upon the request of any representative of the Commission.

By the Commission.

J. Lynn Taylor,

Assistant Secretary.

[FR Doc. 02–32641 Filed 12–26–02; 8:45 am]

BILLING CODE 8010–01–P

[13] We do not edit personal, identifying information such as names, or e-mail addresses, from electronic submissions. Submit only information you wish to make publicly available.

[1] 15 U.S.C. 78s(b)(1).

[2] 17 CFR 240.19b–4.

SECURITIES AND EXCHANGE COMMISSION

[Release No. 34–47017; File No. SR–Amex–2002–96]

Self-Regulatory Organizations; Notice of Filing of Proposed Rule Change and Amendment No. 1 Thereto by the American Stock Exchange LLC To Permit Limited Side-by-Side Trading and Integrated Market Making of Certain iShares Lehman Treasury Index Exchange-Traded Fund Shares and Their Related Options

December 18, 2002.

Pursuant to section 19(b)(1) of the Securities Exchange Act of 1934 (''Act''),[1] and rule 19b–4 thereunder,[2] notice is hereby given that on November 20, 2002, the American Stock Exchange LLC (''Amex'' or ''Exchange'') filed with the Securities and Exchange Commission (''Commission'') the proposed rule change as described in items I, II, and III below, which items have been prepared by the Exchange. The Exchange filed Amendment No. 1 to the proposed rule change on December 3, 2002.[3] The Commission is publishing this notice to solicit comments on the proposed rule change from interested persons.

I. Self-Regulatory Organization's Statement of the Terms of Substance of the Proposed Rule Change

The Exchange proposes to amend Exchange rules 175, 900 and 958 to permit the trading of the iShares Lehman 1–3 Year Treasury Bond Fund (the ''1–3 Year Bond Fund''), the iShares Lehman 7–10 Year Treasury Bond Fund (the ''7–10 Year Bond Fund''), the iShares Lehman 20+ Year Treasury Bond Fund (the ''20+Year Bond Fund'') (collectively, the ''iShares Lehman Treasury Index ETFs''),[4] and any other exchange-traded fund shares (''ETFs'') approved by the Commission, and their related options contracts by the same specialist unit and registered options traders (''ROTs'') and the approved persons of such specialist unit or ROT without informational or physical barriers. The text of the proposed rule change appears below. New text is in *italics.*

Specialist Prohibitions

Rule 175

(a)–(b) No change.

(c) No specialist or his member organization or any member, limited partner, officer, or approved person thereof shall act as an options specialist or function in any capacity involving market making responsibilities in any option as to which the underlying security is a stock in which the specialist is registered as such. Notwithstanding the foregoing:

(1) A specialist member organization or an approved person of a specialist registered in a stock admitted to dealings on an unlisted basis may act as a specialist, Registered Options Trader or other registered market maker in the related option provided that such persons have established and obtained Exchange approval for procedures restricting the flow of material, non-public corporate or market information between them pursuant to Exchange rule 193, and

(2) A specialist, specialist member organization or approved person of a specialist or specialist member organization registered in an Exchange Traded Fund Share or Trust Issued Receipt that meets the criteria set forth in Commentary .03(a) to Amex rule 1000 or Commentary .02(a) to Amex rule 1000A *or approved by the Securities and Exchange Commission for trading arrangements under this paragraph and rule 958(e)* may act as a specialist, Registered Options Trader or other registered market maker in the related option without implementing procedures to restrict the flow of information between them and without any physical separation between the underlying Exchange Traded Fund Share or Trust Issued Receipt and the related option. In addition, paragraph (b) of this rule and the Guidelines to this rule are inapplicable to a specialist or specialist member organization registered in an Exchange Traded Fund Share or Trust Issued Receipt that meets the criteria set forth in Commentary .03(a) to Amex rule 1000 or Commentary .02(a) to Amex rule 1000A *or approved by the Securities and Exchange Commission for trading arrangements under this paragraph and rule 958(e)* and the approved persons of such specialist or specialist member organization.

* * * * *

Applicability, Definitions and References

Rule 900

A. (a) No change.

(b) Definitions—The following terms as used in the Rules of this Chapter shall, unless the context otherwise indicates, have the meanings herein specified:

(1) through (37). No change.

(38) Paired Security—The term ''Paired Security'' means a security which is the subject of securities trading on the Exchange and Exchange option trading, provided, however, that the term ''Paired Security'' shall not mean an Exchange-Traded Fund Share or Trust Issued Receipt which is the subject of securities trading on the Exchange and Exchange option trading if the Exchange-Traded Fund Share or Trust Issued Receipt meet the criteria

[3] *See* letter from Jeffrey P. Burns, Assistant General Counsel, Amex, to Kelly McCormick Riley, Senior Special Counsel, Division of Market Regulation, Commission, dated November 27, 2002 (''Amendment No. 1''). In Amendment No. 1, the Exchange revised the rule text of the proposal to clarify that the Commission must approved integrated market making and side-by-side trading in Exchange Traded Fund (''ETF'') or Trust Issued Receipt (''TIR'') that does not meet the criteria set forth in Commentary .03(a) or Amex rule 1000 or Commentary .02(a) to Amex rule 1000A.

[4] *See* Securities Exchange Act Release No. 46252 (July 24, 2002), 67 FR 49715 (July 31, 2002), (''iShares Treasury Index ETF Approval''). *See also* Investment Company Act Release Nos. 25622 (June 25, 2002), (approval0; and 25594 (May 29, 2002), 67 FR 38681 (June 5, 2002), (notice) (Trust, Advisor and Distributor of the funds applied and received a Commission order exemption the funds from various provisions of the Investment Company Act of 1940 (''1940 Act'')).

set forth in Commentary .03(a) to Amex rule 1000 or Commentary .02(a) to Amex rule 1000A or approved by the Securities and Exchange Commission for trading arrangements under rule 175(c)(2) and rule 958(e).

(39) through end. No change.

* * * * *

Options Transactions of Registered Traders

Rule 958. No Registered Trader shall initiate an Exchange options transaction on the Floor for any account in which he has an interest except in accordance with the following provisions:

(a) through (d). No change.

(e) No equity specialist, odd-lot dealer or NASDAQ market maker may act as a registered trader in a class of stock options on a stock in which he is registered in the primary market therefor, provided, however, that an equity specialist may act as a registered trader in a class of stock options on an Exchange-Traded Fund Share or a Trust Issued Receipt in which he is registered in the primary market therefor if the Exchange-Traded Fund Share or Trust Issued Receipt meets the criteria set forth in Commentary .03(a) to Amex rule 1000 or Commentary .02(a) to Amex rule 1000A *or approved by the Securities and Exchange Commission for trading arrangements under this paragraph and rule 175(c)(2).*

(f) through end. No change.

* * * * *

II. Self-Regulatory Organization's Statement of the Purpose of, and Statutory Basis for, the Proposed Rule Change

In its filing with the Commission, the Exchange included statements concerning the purpose of and basis for the proposed rule change and discussed any comments it received on the proposed rule change. The text of these statements may be examined at the places specified in item IV below. The Exchange has prepared summaries, set forth in sections A, B, and C below, of the most significant aspects of such statements.

A. Self-Regulatory Organization's Statement of the Purpose of, and Statutory Basis for, Proposed Rule Change

1. Purpose

The purpose of this proposed rule change is to permit the trading of the iShares Lehman Treasury Index ETFs and their related options by the same specialist, specialist firm, and the approved persons of such specialist or specialist firm without any information or physical barriers on the floor of the Exchange. Accordingly, this proposal would permit integrated market making[5] and side-by-side trading[6] in iShares Lehman Treasury Index ETFs and their related options. It would exempt the underlying ETF specialists and their approved persons from Amex rule 175(b) and the Guidelines to Amex rule 175.

The Exchange files this rule change in connection with its listing and trading of options on the iShares Lehman Treasury Index ETFs.[7] Current Exchange rules impose certain restrictions on the approved persons[8] and other persons that are affiliated with a specialist or specialist unit (collectively ''specialist affiliates''). Among these rules, Amex rule 175(c) generally prohibits the specialist affiliates of an Amex equity specialist from acting as an options specialist or functioning in any capacity involving market making responsibilities in any option as to which stock the specialist is registered.[9] A recent amendment to Amex rule 175(c) added paragraph (c)(2), which permits integrated market making of certain ''broad-based'' equity ETFs.[10] Here, the Exchange proposes to amend Amex rules 175, 900 and 958 to allow integrated market making and side-by-side trading in the iShares Lehman Treasury Index ETFs and their related options as well as integrated market making and side-by-side trading of any ETF and its related option with separate Commission approval.

In light of the Commission's recent approval to permit side-by-side trading and integrated market making on the Amex in certain equity-based ETFs,[11] the Exchange believes that iShares Treasury Index ETFs should be similarly treated. The ETF Integrated Market Making Approval established a generic criteria for equity-based ETFs that requires such ETFs to be ''broad-based'' in order be for integrated market making and side-by-side trading to apply.[12] For purposes of the instant proposal, the Exchange requests that the Commission approve certain fixed-income ETFs, based on various segments or durations of the U.S. Treasury securities market (arguably, the most liquid and active securities market in the world), for integrated market making and side-by-side trading separate from the previously adopted equity-based ETF generic standards. Accordingly, the Exchange proposes to amend Amex rule 175(c)(2) to permit the same specialists, their member organizations, and their approved persons to trade an ETF and its related options, if approved to do so by the Commission, without reference to the limitations of Amex rule 175(b) and the Guidelines to Amex rule 175. The Exchange also proposes to amend the definition of ''Paired Security'' in Amex rule 900 to provide that in addition to those ETFs that meet the equity-based generic criteria, those ETFs that are specifically approved for integrated market making and side-by-side trading by the Commission.

a. The Market for Treasury Securities

The market for U.S. Treasury securities is the largest and most liquid securities market in the world.[13]

[5] ''Integrated market making'' refers to the trading of options and their underlying securities by the same specialist and/or specialist firm.

[6] ''Side-by-side trading'' refers to the trading of options and the underlying stocks at the same location, though not necessarily by the same specialist.

[7] The underlying iShares Treasury Index ETFs commenced trading on the Amex on July 26, 2002. *See* iShares Treasury Index ETF Approval, *supra* note 4.

[8] The Exchange defines an ''approved person'' as an individual or corporation, partnership or other entity which controls a member or member organization, or which is engaged in the securities business and is under common control with, or controlled by, a member or member organization or which is the owner of a membership held subject to a special transfer agreement. *See* article I, section 3(g) of the Exchange Constitution. The term ''control'' is defined in Exchange Definitional rule 13.

[9] This rule was adopted in connection with the Exchange's application in the late 1980s to list options on its listed equities. *See* Securities Exchange Act Release No. 26147 (October 3, 1988), 53 FR 39556 (October 7, 1988) (File No. SR–Amex–88–16).

[10] *See* Securities Exchange Act Release No. 46213 (July 16, 2002), 67 FR 48232 (July 23, 2002) (''ETF Integrated Market Making Approval'').

[11] *See id.* The Exchange has filed a proposed rule change that would allow the trading on a pilot program basis of specified Nasdaq stocks, ETFs, TIRs and their related options at the same location on the Trading Floor and by the same specialist units and registered traders. *See* SR–Amex–2001–75 (September 6, 2001). The ETF Integrated Market Making Approval neither amended nor withdrew SR–Amex–2001–75.

[12] Commentary .03(a) to Amex rule 1000 and Commentary .02(a) to Amex rule 1000A provide that each component of an index or portfolio underlying an ETF must meet the following criteria: (1) Component securities that in the aggregate account for at least 90% of the weight of the portfolio must have a minimum market value of at least $75 million; (2) the component securities representing 90% of the weight of the portfolio each have a minimum monthly trading volume during each of the last six months of at least 250,000 shares; (3) the most heavily weighted component security cannot exceed 25% of the weight of the portfolio and the five most heavily weighted component securities cannot exceed 65% of the weight of the portfolio; (4) the underlying portfolio must include a minimum of 13 securities; and (5) all securities in the portfolio must be listed on a national securities exchange or the Nasdaq Stock Market (the ''broad-based criteria'').

[13] *See The Treasury Securities Market: Overview and Recent Developments,* The Federal Reserve

Continued

Through the 3rd quarter of 2002, total daily average transaction volume for primary dealers [14] in U.S. Treasury coupon securities was approximately $316 billion. During this same period, primary dealer average daily transaction volume in the 1–3 year range was approximately $132.07 billion; average daily transaction volume in the 3–6 year range was approximately $92.73 billion; average daily transaction volume in the 6–11 year range was approximately $74.8 billion; and average daily transaction volume in the more than 11 year range was approximately $18.9 billion.[15] In the 3rd quarter of 2002, average daily transaction volumes for the same duration U.S. Treasury coupon securities were $134.03 billion, $106.97 billion, $83.57 billion and $20.57 billion, respectively. Most of this trading volume occurs in the most recently issued security in a particular maturity class.[16]

The secondary market for Treasury securities is the over-the-counter (''OTC'') market. Many dealers, and particularly primary dealers, make markets in Treasury securities. Trading activity takes place between primary dealers, non-primary dealers, and customers of these dealers, including financial institutions, non-financial institutions and individuals. Increasingly, trading in Treasury securities occurs through automated trading systems.[17]

The primary dealers are among the most active participants in the secondary market for Treasury securities. The primary dealers and other large market participants frequently trade with each other, and most of these transactions occur through an interdealer broker.[18] The interdealer brokers provide primary dealers and other large participants in the Treasury market with electronic screens that display the bid and offer prices among dealers and allow trades to be consummated.

Quote and trade information regarding Treasury securities is widely available to market participants from a variety of sources. The electronic trade and quote systems of the dealers and interdealer broker are one such source. Groups of dealers also furnish trade and quote information to vendors such as Bloomberg, Reuters, Bridge, Moneyline Telerate, and CQG. GovPX,[19] for example, is a consortium of government securities interdealer brokers that provides market data from these government securities interdealer brokers to market data vendors. TradeWeb, another example, is a consortium of 18 primary dealers that, in addition to providing a trading platform, also provides market data direct to subscribers or to other market data vendors.[20] In addition, the leading interdealer broker of government securities (Cantor Fitzgerald) for many years has provided Moneyline Telerate with market data.

b. iShares Lehman Treasury Index ETFs

The Lehman U.S. Treasury Indexes are each market capitalization weighted and include all of the securities that meet the particular Index criteria. Each Index includes all publicly issued, U.S. Treasury securities that have a remaining maturity of between 1–3 years, 7–10 years or over 20 years (depending on the Index), are non-convertible, are denominated in U.S. dollars, are rated investment grade (Baa3 or better) by Moody's Investors Service, are fixed rate, and have more than $150 million par outstanding. Excluded from each Index are certain special issues, such as flower bonds,[21] targeted investor notes (TINs), state and local government series bonds (SLGs), and coupon issues that have been stripped from assets that are already included in the Index. Each Index's constituents are updated on the last calendar day of each month.

Each Index is valued using end of day bid side prices, as marked by Lehman. Intra-month cash flows contribute to monthly returns, but they are not reinvested during the month and do not earn a reinvestment return. Total returns are calculated based on the sum of price changes, gain/loss on repayments of principal, and coupon received or accrued, expressed as a percentage of beginning market value.[22]

i. Lehman 1–3 Year Treasury Bond Fund (1–3 Year Bond Fund). The 1–3 Year Bond Fund invests primarily in a portfolio of fixed income securities with the objective of approximating the total rate of return of the short term sector of the U.S. Treasury market as defined by the Lehman Brothers 1–3 Year U.S. Treasury Index. The Lehman 1–3 Year U.S. Treasury Index represents public obligations of the U.S. Treasury that have a remaining maturity of between 1 and 3 years. As of September 30, 2002, there were 31'issues included in the Index with the Fund using a representative sampling strategy to track the Index.[23]

ii. Lehman 7–10 Year Treasury Bond Fund (7–10 Year Bond Fund) The 7–10 Year Bond Fund invests primarily in a portfolio of fixed income securities with the objective of approximating the total rate of return of the intermediate term sector of the U.S. Treasury market as defined by the Lehman Brothers 7–10 Year U.S. Treasury Index. The Lehman 7–10 Year U.S. Treasury Index represents public obligations of the U.S. Treasury that have a remaining maturity of between 7 and 10 years. As of September 30, 2002, there were 12 issues included in the Index with the Fund using a representative sampling strategy to track the Index.[24]

iii. Lehman 20+ Year Treasury Bond Fund (20+ Year Bond Fund). The 20+ Year Bond Fund invests primarily in a portfolio of fixed income securities with the objective of approximating the total rate of return of the long term sector of the U.S. Treasury market as defined by the Lehman Brothers 20+ Year U.S. Treasury Index. The Lehman 20+ Year U.S. Treasury Index represents public

Bulletin, December 1999, available at *http://www.federalreserve.gov/pubs/bulletin/1999/1299lead.pdf.*

[14] The Federal Reserve Bank of New York selects Primary dealers to act as counter parties for its open market operations (government securities transactions related to the Federal Reserve's implementation of monetary policy). Primary dealers are required to participate meaningfully in both open market operations and Treasury auctions as well as to provide policy relevant market information to The Federal Reserve Bank of New York.

[15] Primary dealers in Treasury securities submit statistics on their transactions in Treasuries to The Federal Reserve Bank of New York. These statistics are available on their web site at *http://www.newyorkfed.org/pihome/statistics/primdeal.html?expand=9.*

[16] *See The Treasury Securities Market: Overview and Recent Developments, supra* note 13.

[17] *See, e.g., eCommerce in the Fixed-Income Markets: The 2001 Review of Electronic Transaction Systems,* November 2001, *http://www.bondmarkets.com/research/ ecommerce/ecommercedraft.shtml.*

[18] *E.g.,* BrokerTec Global LLC, Cantor Fitzgerald, Inc., Garban-Intercapital, and Liberty Brokerage Investment Corp.

[19] *www.govpx.com.*

[20] *www.tradeweb.com.*

[21] A ''flower bond'' is a type of U.S. government bond that, regardless of its cost price, is acceptable at par value in payment of estate taxes if the decedent was the legal holder at the time of death.

[22] The Monthly Statement of the Public Debt of the United States may be obtained at *www.publicdebt.treas.gov.*

[23] As of September 30, 2002, the Index exhibited the following characteristics: (1) Weighted average maturity of 1.77 years; (2) weighted average coupon of 4.58%; (3) an effective duration of 1.68 years; (4) yield to maturity of 1.64% and (5) a current yield of 4.37%. In addition, the top holding of the Index constituted 6% of the Index while the top five (5) holdings represented 30% of the Index.

[24] As of September 30, 2002, the Index exhibited the following characteristics: (1) Weighted average maturity of 8.55 years; (2) weighted average coupon of 5.98%; (3) an effective duration of 6.65 years; (4) yield to maturity of 3.63% and (5) a current yield of 5.36%. In addition, the top holding of the Index constituted 17% of the Index while the top five (5) holdings represented 76% of the Index.

obligations of the U.S. Treasury that have a remaining maturity greater than 20 years. As of September 30, 2002, there were 18 issues included in the Index with the Fund using a representative sampling strategy to track the Index.[25]

c. Broad-Based ETF Criteria

As discussed above, the Commission has approved a proposal to permit integrated market making and side-by-side trading of equity-based ETFs that meet the broad-based criteria.[26] For the purpose of this proposal, the Exchange submits that the iShares Treasury Index ETFs comply with the broad-based criteria, as applicable, to fixed income U.S. government securities.

First, the broad-based criteria requires that at least 90% of the component securities of an Index have a minimum market value of at least $75 million. The Exchange submits that all three iShares Treasury Index ETFs meet this criteria based on the requirement that all Treasury securities of each respective U.S. Treasury Index must have more than $150 million outstanding in par value. Second, the broad-based criteria also requires that at least 90% of the component securities of an Index have a minimum monthly trading volume during each of the last six months of at least 250,000 shares. Because the trading of U.S. Treasury securities is based on the underlying transaction or notional amount rather than ''share'' amounts, the Exchange submits that this second criteria cannot strictly be applied to the U.S. Treasury Indexes. However, the Exchange believes that a comparison can be made if the monthly trading volumes identified in the broad-based criteria are converted to U.S. dollar amounts. In connection with the iShares Treasury Index ETFs the average daily transaction volume through the 3rd quarter of 2002 for primary dealers in the 1–3 Year Treasury security was approximately $132.07 billion; for the 3–6 Year Treasury security the average daily transaction volume for primary dealers was $92.73 billion; for the 6–11 Treasury security the average daily transaction volume was $74.8 billion; and for Treasury securities over 11 Years the average daily trading volume was approximately $18.9 billion. For comparison purposes, Microsoft Corporation (MSFT) which is a component in several broad-based Indexes underlying ETFs, would be required to have a minimum monthly trading dollar value of at least $13.25 million given the current price of MSFT of $53 per share on October 23, 2002 (250,000 × $53). Clearly, the monthly trading volumes for the U.S. Treasury securities of the Indexes underlying the three iShares Treasury Index ETFs far exceeds the comparative dollar amounts for the largest-capitalized components of the equity-based indexes under this second requirement of the broad-based criteria.

Third, under the broad-based criteria, a component security cannot exceed 25% of the weight of the Index and the five most heavily weighted component securities cannot exceed 65% of the weight of such Index. The Lehman 1–3 Year U.S. Treasury Index and the Lehman 20+ Year U.S. Treasury Index strictly comply with this requirement of the broad-based criteria applicable to equity-based ETFs. However, the Lehman 7–10 Year U.S. Treasury Index does not meet the 65% test for the top five (5) holdings of an Index. The broad-based criteria originally developed for equity-based ETFs does not correspond well to the U.S. Treasury securities market. The Exchange believes that the nature of the U.S. Treasury securities market, renders this third criteria particularly difficult to apply to certain U.S. Treasury indexes or portfolios because of the specific duration of the yield curve that the U.S. Treasury index or portfolio is attempting to track or benchmark. Furthermore, the Exchange submits that the only differences in these U.S. Treasury securities held by the corresponding indexes are related to the rate of interest and maturities. Accordingly, the Exchange believes that the market for U.S. Treasury securities, which is the most liquid market in the world, is not particularly susceptible to manipulation. The Exchange also notes that in connection with the sale and issue of U.S. Treasury bills, notes and bonds, the Department of the Treasury limits to 35% the amount that any one bidder may be awarded in any auction.[27]

In contrast, an index or portfolio of equity securities depends on several corporate issuers rather than the full faith and credit of the U.S. Government in the case of U.S. Treasury securities. As a result, the broad-based criteria includes a diversification requirement so that integrated market making and side-by-side trading would not be permitted if such Index underlying or ETF was dominated by one (1) or a few stocks. The Exchange submits that iShares Treasure Index ETFs do not have similar diversification concerns because the objective of each such ETF is to approximate the total return of their respective sector or duration of the U.S. Treasury market.

Fourth, the broad-based criteria requires an index or portfolio underlying an equity-based ETF to have at least 13 component securities. The Lehman 7–10 year U.S. Treasury Index currently contains 12 component securities, and therefore, fails this requirement of the broad-based criteria. The Exchange believes that because the Lehman 7–10 Year U.S. Treasury Index measures a specific duration of the U.S. Treasury securities market, the application of this fourth criteria is unnecessary here. For example, from the time of the launch of the 7–10 Year Bond Fund through September 30, 2002, the Index contained 13 component securities. The Exchange submits that slight modifications to the Index to better reflect the appropriate market should not determine whether integrated market making and side-by-side trading are permissible. Therefore, the Exchange believes that the Lehman 1–3 Year U.S. Treasury Index and the Lehman 20+ Year U.S. Treasury Index both strictly comply with this requirement of the broad-based criteria by containing 31 and 19 U.S. Treasury securities, respectively.

Fifth, the broad-based criteria requires that all securities in the portfolio be listed on a national securities exchange or the Nasdaq Stock Market. The Exchange contends that this requirement is inapplicable on its face to all iShares Treasury Index ETFs because the component securities of each related Index are not listed on a national securities exchange or traded through the Nasdaq Stock Market. As described above, U.S. Treasury securities are traded OTC through a network of designated primary dealers, non-primary dealers, financial institutions, non-financial institutions and individuals.

The Exchange further submits that the application of the broad-based criteria that was developed to ensure that equity-based ETFs are not susceptible to manipulation is not particularly useful in connection with this proposal for the integrated market making and side-by-side trading of ETFs based on U.S. Treasury Indexes. In particular, the Exchange contends that the nature of the U.S. Treasury securities market itself

[25] As of September 30, 2002, the Index exhibited the following characteristics: (1) Weighted average maturity of 24.18 years; (2) weighted average coupon of 6.30%; (3) an effective duration of 13.70 years; (4) yield to maturity of 5.14% and (5) a current yield of 5.45%. In addition, the top holding of the Index constituted 11% of the Index while the top five holdings represented 44% of the Index.

[26] *See supra,* note 12; *see also ETF Integrated Market Making Approval,* supra note 10.

[27] *See* 31 CFR 356.22; Department of the Treasury, Final Rules Relating to the Sale and Issue of Marketable Book-Entry Treasury Bills, Notes and Bonds, 58 FR 412 (January 5, 1993).

suggests that it is not susceptible to manipulation due to the tremendous liquidity and limits on the percentage ownership in any Treasury auction. As a result, the Exchange believes that the iShares Treasury Index ETFs are broad-based ETFs that represent a specific duration of the U.S. Treasury securities market as measured by the Lehman U.S. Treasury Indexes, and, therefore, such ETFs should be permitted to be part of an Integrated Market Making environment on the floor of the Exchange.

d. Integrated Market Making and Side-by-Side Trading

The Amex believes that integrated market making and side-by-side trading of ETFs and their related options is appropriate. The Exchange expects that the ability to engage in integrated market making and side-by-side trading of iShares Treasury Index ETFs would help to develop deeper, more liquid and efficient markets, as acknowledged by the Commission Staff's Special Study of the Options Markets.[28]

The Exchange believes that the Commission's conclusions and analysis set forth in the ETF Integrated Market Making Approval equally apply to the iShares Treasury Index ETFs and their related options. As the Exchange has previously asserted in connection with equity-based ETFs, the primary trading market will not enjoy perceived informational advantages that may be available in the case of individual stock options, because the pricing of an ETF is not based on the supply and demand of the ETF itself, but instead, on the prices of and information on the underlying portfolio of securities and other associated derivatives.

The Exchange believes that the proposed integrated market making and side-by-side trading for iShares Treasury Index ETFs will increase market quality and provide both price and operational efficiencies while not raising any significant issues of informational advantage.[29] In the case of ETFs, the Exchange submits that informational advantages are minimal because the pricing of ETFs are based almost entirely on the value of the underlying portfolio of securities and other associated derivatives with little if any price impact arising from the supply and demand for the ETF shares. Accordingly, knowledge of limit orders on the specialist's book for ETF shares does not provide an informational advantage to the specialist when pricing or trading ETF shares.

The Commission has previously stated that ''[t]he integration of trading in options and their underlying securities on an exchange floor may create opportunities to engage in manipulative and other improper trading activities that do not presently exist.''[30] In order for integrated market making and side-by-side trading in iShares Treasury Index ETFs and their related options to potentially create opportunities for the specialist and registered traders to engage in improper activity, market making in both the option and the underlying ETF must yield information that can be used in such an endeavor. With respect to shares of an iShares Treasury Index ETF and related options, the Exchange contends that neither the specialist nor the traders are privy to exclusive market information that is useful in pricing such shares. Like all market participants, they have access to last sale information for each of the component securities, the current quotes for the components and information for any other products that may be used in pricing the fund shares. Exchange specialists and traders are unlikely to obtain relevant information from the Exchange floor that is nor already known by other market participants and already factored into prices and quotes, especially since the Exchange does not list and trade the underlying U.S. Treasury securities of the ETFs. Moreover, showing the specialist's limit order book to the trading crowd substantially lessens these informational advantage concerns. Given the enhanced surveillance systems that monitor all trading floor activity today at the Amex, the Exchange submits that attempts to engage in improper conduct by a specialist or trader will be readily detected.

Among other reasons why limit orders in ETF shares such as the iShares Treasury Index Fund are not a source of informational advantage is the number of such shares issued and outstanding may be increased or decreased at a very low cost in response to changing demand for such shares. A defining characteristic of all Amex listed unit investment trusts and management investment companies that hold securities based on an index or a portfolio of securities is that they are open-ended.[31] New ETF shares in these products may be created on any business day in response to an offer to purchase such shares. As a result, the Exchange submits that there is substantially less potential for manipulation of an ETF share's price, because unlike a market in a thinly traded corporate stock, the market for an ETF share cannot be successfully squeezed or cornered. The Exchange contends that this is untrue because the potential supply of ETF shares is, for all practical purposes, unlimited.

The key point of this proposal is that the market for iShares Treasury Index ETFs is a derivative market of the underlying U.S. Treasury securities markets and that the options market is also a derivative of this underlying U.S. Treasury securities market. The Commission recognized the limitations of the information that specialists and market makers can obtain from the supply and demand in derivative products when it noted in the Options Study:

> * * * that even while unitary options specialists and competing options market makers have market information and competitive advantages of their own, the derivative nature of the options markets may strictly limit the significance of these advantages. Stated differently, because stock prices largely determine the prices of related options, market information concerning the supply of and demand for a stock may be substantially more valuable than information concerning supply and demand for options on the stock.[32]

Integrated market making and side-by-side trading in an ETF and its related options, even for an exchange that was the dominant market for the underlying ETF or option, is far less likely to yield significant non-public stock pricing information which would increase any competitive and market information advantages. Consequently, there is little likelihood that iShares Treasury Index ETFs and their related options order flow would provide a meaningful information advantage to the integrated specialist unit or the market makers in the trading crowd. Indeed, the Exchange expects that the specialist units and market makers for such integrated derivative securities markets would depend primarily upon publicly

[28] *See also* Report of the Special Study of the Options Markets to the Securities and Exchange Commission, H.R. Rep. No. IFC 3, 96th Cong. 1st sess. (Comm. Print 1978) (''Options Study'') at 878, *et. seq.*

[29] *See* Amex File Nos. 2001–75 and 98–23 (precursor to File No. 2001–75 withdrawn by the Amex on July 17, 2001).

[30] *See* Options Study, *supra* note 28 at 885.

[31] ETFs are registered under the 1940 Act either as unit investment trusts or open-end management investment companies. Each ETF continuously offers and redeems shares in large aggregation amounts (50,000 shares), called Creation Units, at a price established at the end of each business day based on the net asset value of its portfolio. The individual ETF shares are then listed and traded in a secondary trading market, such as the Amex.

[32] *See* Options Study, *supra* note 28 at 916, note 280.

disseminated quotation and transaction information from the U.S. Treasury securities market when making pricing decisions.[33]

Integrated market making in two related derivatives is not unprecedented. Exchange specialist units and market makers have long made integrated markets in stock options bearing differing strike prices and expirations which are separate but closely linked derivative securities markets. In 1985, the Commission approved an NASD proposal for fully integrated market making in stock options and their underlying stock.[34]

The Exchange contends that integrated market making in derivative products does not entail a materially increased potential for price manipulation or other improper trading practices. The Exchange believes that the primary importance of underlying securities market prices and the arbitrage opportunities of other traders provides natural safeguards against this type of activity. Further, such abuses are unlikely to occur due to the limited influence of derivative markets on the underlying securities price. To the extent that any risk remains, the Exchange believes that it is better addressed by surveillance rather than a restriction that threatens liquidity. The Exchange also notes that the Commission previously approved integrated market making and side-by-side trading of related derivative products.[35] The Exchange submits that the analysis and rationale set forth by the Commission in these orders is equally applicable to this Proposal.

Additionally, the Commission has expressed concern that the integration of trading in options and their underlying securities may increase the difficulty of detecting improper trading practices on an exchange floor.[36] The Exchange notes that it currently has in place safeguards to detect and prevent potential abuses or manipulative activities. The Exchange believes that its market surveillance program will mitigate any regulatory risks that arise from integrated market making and side-by-side trading of iShare Treasury Index ETFs. Furthermore, the Commission found that the NASD's surveillance procedures sufficient to address the regulatory concerns raised by the NASD's 1985 side-by-side trading program for Nasdaq listed stocks and options.[37] The advances in developing comprehensive audit trails for options will give us the ability to provide considerably enhanced surveillance oversight compared to the capabilities available in 1985. Accordingly, the Exchange believes its existing surveillance procedures are sufficient to detect any improper trading activity, deter potential manipulative or improper trading activity and minimize the regulatory risks of integrated market making and side-by-side trading. In sum, the Exchange conducts regular surveillance to detect any abuses or attempted manipulations to ensure compliance with its safeguards. The Exchange believes that the proximity of trading activity in related options products will increase the effectiveness of these safeguards.

2. Statutory Basis

The Exchange believes that the proposed rule change is consistent with section 6(b) of the Act,[38] in general, and furthers the objectives of section 6(b)(5) of the Act,[39] in particular, in that it is designed to prevent fraudulent an manipulative practices, promote just and equitable principles of trade, foster cooperation and coordination with persons engaged in facilitating transactions in securities, to remove impediments and perfect the mechanisms of a free and open market and the national market system, protect investors and the public interest and is not designed to permit unfair discrimination between customers, issuers, brokers or dealers.

B. Self-Regulatory Organization's Statement on Burden on Competition

The Exchange does not believe that the proposed rule change, as amended, will impose any burden on competition.

C. Self-Regulatory Organization's Statement on Comments on the Proposed Rule Change Received From Members, Participants, or Others

No written comments were solicited or received with respect to the proposed rule change.

III. Date of Effectiveness of the Proposed Rule Change and Timing for Commission Action

Within 35 days of the date of publication of this notice in the **Federal Register** or within such longer period (i) as the Commission may designate up to 90 days of such date if it finds such longer period to be appropriate and publishes its reasons for so finding, or (ii) as to which the Exchange consents, the Commission will:

A. By order approve such proposed rule change; or

B. Institute proceedings to determine whether the proposed rule change should be disapproved.

IV. Solicitation of Comments

Interested persons are invited to submit written data, views, and arguments concerning the foregoing, including whether the proposed rule change, as amended, is consistent with the Act. Persons making written submissions should file six copies thereof with the Secretary, Securities and Exchange Commission, 450 Fifth Street, NW., Washington, DC 20549–0609. Copies of the submission, all subsequent amendments, all written statements with respect to the proposed rule change that are filed with the Commission, and all written communications relating to the proposed rule change between the Commission and any person, other than those that may be withheld from the public in accordance with the provisions of 5 U.S.C. 552, will be available for inspection and copying in the Commission's Public Reference Room. Copies of such filings will also be available for inspection and copying at the principal office of the Exchange. All submissions should refer to File No. SR–Amex-2002–96 and should be submitted by January 17, 2003.

For the Commission, by the Division of Market Regulation, pursuant to delegated authority.[40]

J. Lynn Taylor,

Assistant Secretary.

[FR Doc. 02–32739 Filed 12–26–02; 8:45 am]

BILLING CODE 8010–01–P

[33] *See* Options Study, *supra* note 28 at 906.

[34] *See* Securities Exchange Act Release No. 22026 (May 8, 1985), 50 FR 20310 (May 15, 1985).

[35] *See* Securities Exchange Act Release No. 27383 (October 26, 1989), 54 FR 45846 (October 31, 1989) (Order approving a CBOE proposal to list and trade market basket contracts based on the S&P 100 and S&P 500 at trading posts adjacent to the related index options). *See also* ETF Integrated Market Making Approval, *supra* note 10.

[36] *See* Options Study, *supra* note 28 at 896.

[37] *See* Securities Exchange Act Release Nos. 22439 (September 20, 1985), 50 FR 39191 (September 27, 1985). In the ''Conclusions'' section of the Release, the Commission stated:

For the reasons stated in the OTC Options Release, the Commission continues to believe that side-by-side market making in the six pilot stocks should offer substantial market benefits and, with equity and options audit trails in place, also should reduce to surveillable levels the regulatory concerns raised by side by side market making. The Commission also does not believe that the inclusion of exchange specialists and market makers does not appear to create any additional or unique regulatory problems and provides all relevant markets a fair competitive opportunity.

[38] 15 U.S.C. 78f(b).

[39] 15 U.S.C. 78f(b)(5).

[40] 17 CFR 200.30–3(a)(12).

SECURITIES AND EXCHANGE COMMISSION

[Release No. 34–47066; File No. SR–Amex–2002–84]

Self-Regulatory Organizations; Notice of Filing of Proposed Rule Change and Amendment No. 1 Thereto by American Stock Exchange LLC Regarding Rules Implementing the Options Intermarket Linkage Plan

December 20, 2002.

Pursuant to section 19(b)(1) of the Securities Exchange Act of 1934 (''Exchange Act''),[1] and rule 19b–4 thereunder,[2] notice is hereby given that on October 15, 2002, the American Stock Exchange LLC (''Amex'' or ''Exchange'') filed with the Securities and Exchange Commission (''Commission'') the proposed rule change as described in items I, II, and III below, which items have been prepared by the Exchange. The Exchange submitted Amendment No. 1 to the proposed rule change on December 19, 2002.[3] The Commission is publishing this notice to solicit comments on the proposed rule change from interested persons.

I. Self-Regulatory Organization's Statement of the Terms of Substance of the Proposed Rule Change

The Exchange is proposing to add Exchange rules 941 through 945 (''Options Linkage Rules'') implementing the options intermarket linkage (''Linkage''). The Exchange is also proposing to clarify how its fees will apply to Linkage trades.[4] The Options Linkage rules will become effective once the Commission approves this filing and the Exchange implements operation of the applicable provisions of the Linkage. For example, the provisions of proposed Amex rule 942 regarding order protection will not become effective until the Exchange implements Linkage operations governing Satisfaction Orders (as defined in proposed Amex rule 940) and trade-through processing.

The text of the proposed rule change is below. Deleted language is in brackets; proposed new language is italicized.

* * * * *

Rule 941. Options Intermarket Linkage

(a) Applicability

The rules in this section are applicable only to linkage orders (as defined below). In addition, except to the extent that specific rules in this section govern, or unless the context otherwise requires, the provisions of the constitution and of all other rules and policies of the Board of Governors shall be applicable to the trading of options on the Exchange.

(b) Definitions '' The following terms shall have the meaning specified in this rule solely for the purpose of this section 4:

(1) *''Aggrieved Party'' means a member of a Participant Exchange whose bid or offer was traded-through.*

(2) *''Block Trade'' means a trade on a Participant Exchange that:*

(i) *Involves 500 or more contracts and has a premium value of at least $150,000;*

(ii) *Is affected at a price outside of the NBBO; and*

(iii) *Involves either:*

(A) *A cross (where a member of the Participant Exchange represents all or a portion of both sides of the trade), or*

(B) *Any other transaction (i.e., in which such member represents an order of block size on one side of the transaction only) that is not the result of an execution at the current bid or offer on the Participant Exchange.*

Contemporaneous transactions at the same price on a Participant Exchange shall be considered a single transaction for the purpose of this definition.

(3) *,''Complex Trade'' means the execution of an order in an option series in conjunction with the execution of one or more related order(s) in different options series in the same underlying security occurring at or near the same time for the equivalent number of contracts and for the purpose of executing a particular investment strategy.*

(4) *''Crossed Market'' means a quotation in which the Exchange disseminates a bid (offer) in a series of an Eligible Option Class at a price that is greater than (is less than) the price of the offer (bid) for the series then being displayed from another Participant Exchange.*

(5) *''Eligible Market Maker'', with respect to an Eligible Option Class, means a specialist or registered options trader that:*

(i) *Is assigned to, and is providing two-sided quotations in, the Eligible Option Class; and*

(ii) *Is in compliance with the requirements of Rule 945*

(6) *''Eligible Option Class'' means all option series overlying a security (as that term is defined in Section 3(a)(10) of the Exchange Act) or group of securities, including both put options and call options, which class is traded on the Exchange and at least one other Participant Exchange.*

(7) *''Firm Customer Quote Size'' with respect to a P/A Order means the lesser of: (a) The number of option contracts that the Participant Exchange sending a P/A Order guarantees it will automatically execute at its disseminated quotation in a series of an Eligible Option Class for Public Customer orders entered directly for execution in that market; or (b) the number of option contracts that the Participant Exchange receiving a P/A Order guarantees it will automatically execute at its disseminated quotation in a series of an Eligible Option Class for Public Customer orders entered directly for execution in that market. The number shall be at least 10.*

(8) *''Firm Principal Quote Size'' means the number of options contracts that a Participant Exchange guarantees it will execute at its disseminated quotation for incoming Principal Orders in an Eligible Option Class. This number shall be at least 10.*

(9) *''Linkage'' means the systems and data communications network that link electronically the Participant Exchanges for the purposes specified in the Plan.*

(10) *''Linkage Order'' means an order routed through the Linkage as permitted under the Plan. There are three types of Linkage Orders:*

(i) *''Principal Acting as Agent (''P/A'') Order,'' which is an order for the principal account of a specialist (or equivalent entity on another Participant Exchange that is authorized to represent Public Customer orders), reflecting the terms of a related unexecuted Public Customer order for which the specialist is acting as agent;*

(ii) *''Principal Order,'' which is an order for the principal account of an Eligible Market Maker (or equivalent entity on another Participant Exchange) and is not a P/A Order; and*

(iii) *''Satisfaction Order,'' which is an order sent through the Linkage to notify a Participant Exchange of a Trade-Through and to seek satisfaction of the liability arising from that Trade-Through.*

(11) *''Locked Market'' means a quotation in which the Exchange disseminates a bid (offer) in a series of*

---

[1] 15 U.S.C. 78s(b)(1).

[2] 17 CFR 240.19b–4.

[3] *See* letter to Deborah Flynn, Assistant Director, Division of Market Regulation, Commission, from Jeffrey P. Burns, Assistant General Counsel, Amex, dated December 18, 2002 (''Amendment No. 1''). In Amendment No. 1, Amex clarified that it is retaining its interim linkage rules.

[4] On August 10, 2001, the Amex filed SR–Amex–2001–64 proposing Linkage Rules. On September 10, 22001, and October 18, 2001, the Amex submitted Amendments No. 1 and 2, respectively. The Commission has not published that filing for comment, and concurrent with the filing of this proposed rule change, the Amex withdraw File No. SR–Amex–2001–64.

an Eligible Option Class at a price that equals the price of the offer (bid) for the series then being displayed from another Participant Exchange.

(12) *''NBBO'' means the national best bid and offer in an options series as calculated by a Participant Exchange.*

(13) *''Non-Firm'' means, with respect to quotations, that members of a Participant Exchange are relieved of their obligation to be firm for their quotations pursuant to rule 11Ac1–1 under the Exchange Act.*

(14) *''Participant Exchange'' means a registered national securities exchange that is a party to the Plan.*

(15) *''Plan'' means the Plan for the Purpose of Creating and Operating an Intermarket Option Linkage, as such plan may be amended from time to time.*

(16) *''Public Customer'' means an individual or organization that is not a broker-dealer. With respect to a Linkage Order, it means an order which, if executed, results in the purchase or sale for an account in which no broker-dealer has an interest.*

(17) *''Reference Price'' means the limit price attached to a Linkage Order by the sending Participant Exchange. Except with respect to a Satisfaction Order, the Reference Price is equal to the bid disseminated by the receiving Participant Exchange at the time that the Linkage Order is transmitted in the case of a Linkage Order to sell and the offer disseminated by the receiving Participant Exchange at the time that the Linkage Order is transmitted in the case of a Linkage Order to buy. With respect to a Satisfaction Order, the Reference Price is the bid or offer price reflecting order(s) of Public Customers disseminated by the sending Participant Exchange that was traded through, except in the case of a Trade-Through that is a Block Trade, in which case the Reference Price shall be the price of the Block Trade that caused the Trade-Through.*

(18) *''Third Participating Market Center Trade-Through'' means a Trade-Through in a series of an Eligible Option Class that is effected by executing a Linkage Order, and such execution results in a sale (purchase) at a price that is inferior to the best bid (offer) being disseminated by another Participant Exchange.*

(19) *''Trade-Through'' means a transaction in an options series at a price that is inferior to the NBBO.*

(20) *''Verifiable Number of Customer Contracts'' means the number of Public Customer contracts in the book of a Participant Exchange.*

Rule 942. Operation of the Linkage

By subscribing to the Plan, the Exchange has agreed to comply with, and enforce compliance by its Members with, the Plan. In this regard, the following shall apply:

(a) Pricing. Members may send P/A Orders and Principal Orders through the Linkage only if such orders are priced at the NBBO.

(b) P/A Orders.

(1) Sending of P/A Orders for Sizes No Larger than the Firm Customer Quote Size. A specialist may send through the Linkage a P/A Order for execution in the automatic execution system of a Participant Exchange if the size of such P/A Order is no larger than the Firm Customer Quote Size. Except as provided in subparagraph (b)(2)(ii) below, a specialist may not break up an order of a Public Customer that is larger than the Firm Customer Quote Size into multiple P/A Orders, one or more of which is equal to or smaller than the Firm Customer Quote Size, so that such orders could be represented as multiple P/A Orders through the Linkage.

(2) Sending of P/A Orders for Sizes Larger than the Firm Customer Quote Size. If the size of a P/A Order is larger than the Firm Customer Quote Size, a specialist may send through the Linkage such P/A Order in one of two ways:

(i) *The specialist may send a P/A Order representing the entire Public Customer order. If the receiving Participant Exchange's disseminated quotation is equal to or better than the Reference Price when the P/A Order arrives at that market, that exchange will execute the P/A Order at its disseminated quotation for at least the Firm Customer Quote Size. Within 15 seconds of receipt of such order, the receiving Participant Exchange will inform the specialist of the amount of the order executed and the amount, if any, that was canceled.*

(ii) *Alternatively, the specialist may send an initial P/A Order for the Firm Customer Quote Size pursuant to subparagraph (b)(1) above. If the Participant Exchange executes the P/A Order and continues to disseminate the same quotation at the NBBO 15 seconds after reporting the execution of the initial P/A Order, the specialist may send an additional P/A Order to the same Participant Exchange. If sent, such additional P/A Order must be for at least the lesser of 100 contracts or the entire remainder of the Public Customer order.*

In any situation where a receiving Participant Exchange does not execute a P/A Order in full, such Exchange is required to move its quotation to a price inferior to the Reference Price of the P/A Order.

(c) Principal Orders.

(1) *Sending of an Initial Principal Order. An Eligible Market Maker may send a Principal Order through the Linkage at a price equal to the NBBO. Subject to the next paragraph, if the Principal Order is not larger than the Firm Principal Quote Size, the receiving Participant Exchange will execute the order in its automatic execution system, if available, if its disseminated quotation is equal to or better than the price specified in the Principal Order when that order arrives at the receiving Participant Exchange. If the Principal Order is larger than the Firm Principal Quote Size, the receiving Participant Exchange will (a) execute the Principal Order at its disseminated quotation for at least the Firm Principal Quote Size and (b) within 15 seconds of receipt of such order, reply to the sending Participant Exchange, informing such Participant Exchange of the amount of the order that was executed and the amount, if any, canceled. If the receiving Participant Exchange does not execute the Principal Order in full, it will move its quote to a price inferior to the Reference Price of the Principal Order.*

(2) *Receipt of Multiple Principal Orders. Once the Exchange provides an automatic execution of a Principal Order in a series of an Eligible Options Class (the ''initial execution''), the Exchange may reject any Principal Order(s) in the same Eligible Option Class sent by the same Participant Exchange for 15 seconds after the initial execution unless: (a) there is a change of price in the Exchange's disseminated offer (bid) in the series of the Eligible Option Class in which there was the initial execution; and (b) such price continues to be the NBBO. After this 15 second period, and until the sooner of (y) one minute after the initial execution or (z) a change in the Exchange's disseminated bid (offer), the Exchange is not obligated to provide an automatic execution for any Principal Orders in the same Eligible Option Class received from the Participant Exchange that sent the order resulting in the initial execution, and thus may treat any such Principal Orders as being greater than the Firm Principal Quote Size.*

(d) Responses to Linkage Orders.

(1) Failure to Receive a Timely Response. A Member who does not receive a response to a P Order or a P/A Order within 20 seconds of sending the order may reject any response received thereafter purporting to report an execution of all or part of that order. The Member so rejecting the response

shall inform the Exchange Participant sending that response of the rejection within 15 seconds of receipt of the response.

(2) Failure to Send a Timely Response. If a Member responds to a P Order or P/A Order more than 20 seconds after receipt of that order, and the Participant Exchange to whom the Member responded cancels such response, the Member shall cancel any trade resulting from such order and shall report the cancellation to OPRA.

(e) Receipt of Linkage Orders. The Exchange will provide for the execution of P/A Orders and Principal Orders if its disseminated quotation is (i) equal to or better than the Reference Price, and (ii) equal to the then current NBBO. Subject to paragraph (c) above, if the size of a P/A Order or Principal Order is not larger than the Firm Customer Quote Size or Firm Principal Quote Size, respectively, the Exchange will provide for the execution of the entire order, and shall execute such order in its automatic execution system if that system is available. If the size of a P/A Order or Principal Order is larger than the Firm Customer Quote Size or Firm Principal Quote Size, respectively, the specialist must address the order within 15 seconds to provide an execution for at least the Firm Customer Quote Size or Firm Principal Quote Size, respectively. If the order is not executed in full, the Exchange will move its disseminated quotation to a price inferior to the Reference Price.

Rule 943. Order Protection

(a) Avoidance and Satisfaction of Trade-Throughs.

(1) General Provisions. Absent reasonable justification and during normal market conditions, Members should not effect Trade-Throughs. Except as provided in paragraph (b) below, if a Member effects a Trade-Through with respect to the bid or offer of a Participant Exchange in an Eligible Option Class and the Exchange receives a Satisfaction Order from an Aggrieved Party, either:

(i) the Member who initiated the Trade-Through shall satisfy, or cause to be satisfied, the Aggrieved Party by filling the Satisfaction Order in accordance with subparagraph (a)(2) below; or

(ii) if the Member elects not to do so (and, in the case of Third Participating Market Center Trade-Through, the Member obtains the agreement of the contra party that received the Linkage Order that caused the Trade-Through), then the price of the transaction that constituted the Trade-Through shall be corrected to a price at which a Trade-Through would not have occurred. If the price of the transaction is corrected, the Member correcting the price shall report the corrected price to OPRA, notify the Aggrieved Party of the correction and cancel the Satisfaction Order.

(2) Price and Size. The price and size at which a Satisfaction Order shall be filled is as follows:

(i) Price. A Satisfaction Order shall be filled at the Reference Price. However, if the Reference Price is the price of an apparent Block Trade that caused the Trade-Through, and such trade was not, in fact, a Block Trade, then the Member may cancel the Satisfaction Order. In that case, the Member shall inform the Aggrieved Party within three minutes of receipt of the Satisfaction Order the reason for the cancellation. Within three minutes of receipt of such cancellation, the Aggrieved Party may resend the Satisfaction Order with a Reference Price of the bid or offer that was traded through.

(ii) Size. An Aggrieved Party may send a Satisfaction Order up to the size of the Verifiable Number of Customer Contracts that were included in the disseminated bid or offer that was traded through. Subject to subparagraph (2)(i) above and paragraph (b) below, a Member shall fill in full all Satisfaction Orders it receives following a Trade-Through, subject to the following limitations:

(A) If the number of contracts to be satisfied exceeds the size of the transaction that caused the Trade-Through, the size of the Satisfaction Order(s) that must be filled with respect to each Participant Exchange(s) shall be limited to the size of the transaction that caused the Trade-Through, and the remainder of any Satisfaction Order(s) shall be canceled;

(B) If the transaction that caused the Trade-Through was for a size larger than the Firm Customer Quote Size with respect to any of the Participant Exchange(s) traded through, the total number of contracts to be filled, with respect to all Satisfaction Orders received, shall not exceed the size of the transaction that caused the Trade-Through. In that case, the Member shall fill the Satisfaction Orders pro rata based on the Verifiable Number of Customer Contracts traded through on each Participant Exchange, and shall cancel the remainder of such Satisfaction Orders(s); and

(C) Notwithstanding paragraphs (A) and (B) above, if the transaction that caused the Trade-Through occurred during the five minutes prior to the regularly-scheduled close of trading in the principal market in which the underlying security is traded, the maximum number of contracts to be satisfied with respect to any one Participant Exchange is 10 contracts.

(3) Rejection of Fills of Satisfaction Orders. Within 30 seconds of receipt of notification that another Participant Exchange has filled a Member's Satisfaction Order, the Member that sent the Satisfaction Order may reject such fill, but only to the extent that either: (i) the order(s) for the customer contracts underlying the Satisfaction Order already have been filled; or (2) the customer order(s) to buy (sell) the contracts underlying the Satisfaction Order were canceled.

(4) Protection of Customers. Whenever subparagraph (a)(1) applies, if Public Customer orders (or P/A Orders representing Public Customer orders) constituted either or both sides of the transaction involved in the Trade-Through, each such Public Customer order (or P/A Order) shall receive:

(i) The price that caused the Trade-Through; or

(ii) The price at which the bid or offer traded through was satisfied, if it was satisfied pursuant to subparagraph (a)(1)(i), or the adjusted price, if there was an adjustment, pursuant to subparagraph (a)(1)(ii), Whichever price is most beneficial to the Public Customer order. Resulting differences in prices shall be the responsibility of the Member who initiated the Trade-Through.

(b) Exceptions to Trade-Through Liability. The provisions of paragraph (a) pertaining to the satisfaction of Trade-Throughs shall not apply under the following circumstances:

(1) The Member who initiated the Trade-Through made every reasonable effort to avoid the Trade-Through, but was unable to do so because of a systems/equipment failure or malfunction;

(2) The Member trades through the market of a Participant Exchange to which such Member had sent a P/A Order or Principal Order, and within 20 seconds of sending such order the receiving Participant Exchange had neither executed the order in full nor adjusted the quotation traded through to a price inferior to the Reference Price of the P/A Order or Principal Order;

(3) The bid or offer traded through was being disseminated from a Participant Exchange whose quotes were Non-Firm with respect to such Eligible Option Class;

(4) The Trade-Through was other than a Third Participating Market Center Trade-Through and occurred during a period when, with respect to the Eligible Option Class, the Exchange's quotes were Non-Firm; provided, however, that,

unless one of the other conditions of this paragraph (b) applies, during any such period: (i) Members shall make every reasonable effort to avoid trading through the firm quotes of another Participant Exchange; and (ii) it shall not be considered an exception to paragraph (a) if a Member regularly trades through the firm quotes of another Participant Exchange during such period;

(5) The bid or offer traded through was being disseminated by a Participant Exchange during a trading rotation in the Eligible Option Class;

(6) The transaction that caused the Trade-Through occurred during a trading rotation;

(7) The transaction that caused the Trade-Through was the execution of a Complex Trade;

(8) In the case of a Trade-Through other than a Third Participating Market Center Trade-Through, a Satisfaction Order with respect to the Trade-Through was not received by the Exchange from the Aggrieved Party promptly following the Trade-Through and, in any event, (i) except in the final five minutes of trading, within three minutes from the time the report of the transaction(s) that constituted the Trade-Through was disseminated over OPRA, and (ii) in the final five minutes of trading, within one minute from the time the report of the transaction(s) that constituted the Trade-Through was disseminated over OPRA; or

(9) In the case of a Third Participating Market Center Trade-Through, a Satisfaction Order with respect to the Trade-Through was not received by the Exchange promptly following the Trade-Through. In applying this provision, the Aggrieved Party must send the Exchange a Satisfaction Order within three minutes from the time the report of the transaction that constituted the Trade-Through was disseminated over OPRA. To avoid liability for the Trade-Through, the Member receiving such Satisfaction Order must cancel the Satisfaction Order and inform the Aggrieved Party of the identity of the Participant Exchange that initiated the Trade-Through within three minutes of the receipt of such Satisfaction Order (within one minute in the final five minutes of trading). The Aggrieved Party then must send to the Participant Exchange that initiated the Trade-Through, a Satisfaction Order within three minutes of receipt of the cancellation of the initial Satisfaction Order (within one minute in the final five minutes of trading).

(c) Responsibilities and Rights Following Receipt of Satisfaction Orders.

(1) When a Member receives a Satisfaction Order, that Member shall respond as promptly as practicable pursuant to Exchange procedures by either:

(i) Specifying that one of the exceptions to Trade-Through liability specified in paragraph (b) above is applicable and identifying that particular exception; or

(ii) Taking the appropriate corrective action pursuant to paragraph (a) above.

(2) If the Member who initiated the Trade-Through fails to respond to a Satisfaction Order or otherwise fails to take the corrective action required under paragraph (a) within three minutes of receiving the notice of a Satisfaction Order, and the Exchange determines that:

(i) There was a Trade-Through; and

(ii) None of the exceptions to Trade-Through liability specified in paragraph (b) above were applicable;

Then, subject to the next paragraph, the Member who initiated the Trade-Through shall be liable to the Aggrieved Party for the amount of the actual loss resulting from non-compliance with paragraph (a) and caused by the Trade-Through.

If either (a) the Aggrieved Party does not establish the actual loss within 30 seconds from the time the Aggrieved Party received the response to its Satisfaction Order (or, in the event that it did not receive a response, within four minutes from the time the Aggrieved Party sent the Satisfaction Order) or (b) the Aggrieved Party does not notify the Exchange Participant that initiated the Trade-Through of the amount of such loss within one minute of establishing the loss, then the liability shall be the lesser of the actual loss or the loss caused by the Trade-Through that the Aggrieved Party would have suffered had that party purchased or sold the option series subject to the Trade-Through at the ''mitigation price.''

The ''mitigation price'' is the highest reported bid (in the case where an offer was traded through) or the lowest reported offer (in the case where a bid was traded through), in the series in question 30 seconds from the time the Aggrieved Party received the response to its Satisfaction Order (or, in the event that it did not receive a response, four minutes from the time the Aggrieved Party sent the Satisfaction Order). If the Participant Exchange receives a Satisfaction Order within the final four minutes of trading (on any day except the last day of trading prior to the expiration of the series which is the subject of the Trade-Through), then the mitigation price shall be the price established at the opening of trading in that series on the Aggrieved Party's Participant Exchange on the next trading day. However, if the price of the opening transaction is below the opening bid or above the opening offer as established during the opening rotation, then the mitigation price shall be the opening bid (in the case where an offer was traded through) or opening offer (in the case where a bid was traded through). If the Trade-Through involves a series that expires on the day following the day of the Trade-Through and the Satisfaction Order is received within the four minutes of trading, the ''mitigation price'' shall be the final bid (in the case where an offer was traded through) or offer (in the case where a bid was traded through) on the day of the trade that resulted in the Trade-Through.

(3) A Member that is an Aggrieved Party under the rules of another Participant Exchange governing Trade-Through liability must take steps to establish and mitigate any loss such Member might incur as a result of the Trade-Through of the Member's bid or offer. In addition, the Member shall give prompt notice to the other Participant Exchange of any such action in accordance with subparagraph (c)(2) above.

(d) *Limitations on Trade-Throughs. Members may not repeatedly trade through better prices available on other exchanges, whether or not the exchange or exchanges whose quotations are traded through are Participant Exchanges, unless one or more of the provisions of paragraph (b) above are applicable. In applying this provision:*

(1) The Exchange will consider there to have been a Trade-Through if a Member executes a trade at a price inferior to the NBBO even if the Exchange does not receive a Satisfaction Order from an Aggrieved Party pursuant to subparagraph (a)(1);

(2) The Exchange will not consider there to have been a Trade-Through if a Member executes a Block Trade at a price inferior to the NBBO if such Member satisfied all Aggrieved Parties pursuant to subparagraph (a)(2) following the execution of the Block Trade; and

(3) The Exchange will not consider there to have been a Trade-Through if a Member executes a trade at a price inferior to the quotation being disseminated by an exchange that is not a Participant Exchange if the Member made a good faith effort to trade against the superior quotation of the non-Participant Exchange prior to trading through that quotation. A ''good faith effort'' to reach a non-Participant Exchange's quotation requires that a

Member at least had sent an order that day to the non-Participant Exchange in the class of options in which there is a Trade-Through, at a time at which such Non-Participant Exchange was not relieved of its obligation to be firm for its quotations pursuant to Rule 11Ac1–1 under the Exchange Act, and such Non-Participant Exchange neither executed that order nor moved its quotation to a price inferior to the price of the Member's order within 20 seconds of receipt of that order.

Rule 944. Locked Markets

(a) *Eligible Market Maker Locking or Crossing a Market. An Eligible Market Maker that creates a Locked Market or a Crossed Market shall unlock (uncross) that market or shall direct a Principal Order through the Linkage to trade against the bid or offer that the Eligible Market Maker locked (crossed).*

(b) *Members Other than an Eligible Market Maker Locking or Crossing a Market. A Member other than an Eligible Market Maker that creates a Locked Market or a Crossed Market shall unlock or (uncross) the market.*

Rule 945. Limitation on Principal Order Access

A specialist or registered options trader shall not be permitted to send Principal Orders in an Eligible Option Class through the Linkage for a given calendar quarter if the specialist or registered options trader effected less than 80 percent of its volume in that Eligible Option Class on the Exchange in the previous calendar quarter (that is, the specialist or registered options trader effected 20 percent or more of its volume by sending Principal Orders through the Linkage). This ''80/20'' is represented as follows:

$$\frac{X}{X+Y}$$

''X'' equals the total contract volume the specialist or registered options trader effects in an Eligible Option Class against orders of Public Customers on the Exchange during a calendar quarter (a) including contract volume effected by executing P/A Orders sent to the Exchange through the Linkage, but (b) excluding contract volume effected by sending P/A Orders through the Linkage for execution on another Participant Exchange. ''Y'' equals the total contract volume the specialist or registered options trader effects in such Eligible Option Class by sending Principal Orders through the Linkage during that calendar quarter.

* * * * *

II. Self-Regulatory Organization's Statement of the Purpose of, and Statutory Basis for, the Proposed Rule Change

In its filing with the Commission, the Amex included statements concerning the purpose of, and basis for, the proposed rule change and discussed any comments it received on the proposed rule change. The text of these statements may be examined at the places specified in item IV below. The Amex has prepared summaries, set forth in sections A, B, and C below, of the most significant aspects of such statements.

A. Self-Regulatory Organization's Statement of the Purpose of, and the Statutory Basis for, the Proposed Rule Change

1. Purpose

The Exchange is proposing its Options Linkage Rules in connection with the implementation of the Options Linkage Plan (''Plan'') previously approved by the Commission on July 28, 2000,[5] and subsequently amended on June 27, 2001,[6] and May 30, 2002.[7] The proposed Options Linkage rules also incorporate recent amendments to the Plan that are currently being approved and filed by each options exchange.[8] The Plan provides for an options intermarket communications linkage for the purpose of linking the various options markets in the U.S. The purpose of the Plan and related Options Linkage rules is to enable the options exchanges to establish and implement a linkage consistent with the objectives set forth in section 11A of the Exchange Act.[9] These objectives include, but are not limited to, increasing market efficiency, enhancing competition, increasing the information available to brokers and dealers and investors, facilitating the offsetting of investors' orders and contributing to the best execution of such orders.

The SEC Order issued in October 1999 directed the options exchanges to act jointly in discussing, developing, and submitting for Commission approval an intermarket linkage plan for multiply-traded options. The Commission stated in the SEC Order that it believes a linkage among options markets will benefit investors by increasing competition among markets (and market participants) to provide the best execution of customer orders. In furtherance of this belief, the Commission ordered the options exchanges to take such joint action as is necessary to develop and implement a single linkage plan to permit the efficient transmission of orders among the various options exchanges on a nondiscriminatory basis. The SEC Order further stated that the Commission believes that a linkage of all the options exchanges on a nondiscriminatory basis is necessary to increase the opportunities for brokers to secure the best execution of their customers' orders, to ensure effective competition among options exchanges, and to further facilitate the establishment of a national market system as directed by Congress in section 11A of the Exchange Act.[10]

The development of the Plan raised a number of significant issues including, but not limited to: (1) Whether member firms should determine to which exchange they send their orders, or whether orders should be sent to a linkage system first and then routed to the exchange that has posted the best quote; (2) whether there should be any limitation on market maker or member firm principal access to the linkage; (3) whether there should be limits on the size and types of linkage eligible orders; (4) whether orders routed through the linkage system should be able to access an exchange's automatic execution system; (5) whether a trade-through rule should apply during trading rotations and non-firm quote (or fast market) conditions; and (6) whether there should be an exemption from the trade-through rule for block size trades. The proposed Options Linkage Rules address each of these issues in turn.

Proposed Amex rule 941 sets out the definitions specific to the linkage.

[5] *See* Securities Exchange Act Release No. 43086 (July 28, 2000), 65 FR 48023 (August 4, 2000). The Plan was in response to a Commission order pursuant to section 11A(a)(3)(B) of the Exchange Act, 15 U.S.C. 78k–1(a)(3)(B), directing the options exchanges to file a NMS plan within 90 days to link the options markets. *See* Securities Exchange Act Release No. 42029 (October 19, 1999), 64 FR 57674 (October 26, 1999) (''SEC Order''). The options exchanges that are participants to the Plan include the Amex, Chicago Board Options Exchange, Inc., Pacific Exchange, Inc., Philadelphia Stock Exchange, Inc. and the International Securities Exchange, Inc. (the ''options exchanges'').

[6] *See* Securities Exchange Act Release No. 44482 (June 27, 2001), 66 FR 35470 (July 5, 2001) (''Plan Amendment No. 1 Approval'').

[7] *See* Securities Exchange Act Release No. 46001 (May 30, 2002), 67 FR 38687 (June 5, 2002) (''Plan Amendments Nos. 2 and 3 Approval'').

[8] The options exchanges have filed with the Commission Joint Amendment No. 4 (''Amendment No. 4'') to the Plan. The purpose of this Amendment is to effect three substantive changes governing the operation of the Linkage: (1) Establish special provisions for filling Satisfaction Orders at the end of the trading day; (2) reducing the time period that a member must wait after sending a Linkage Order from 30 seconds to 20 seconds before such member is able to trade through that market; and (3) prohibit fees for Satisfaction Orders executed through the Linkage.

[9] 15 U.S.C. 78k–1.

[10] *Id.*

Moreover, existing definitions in Amex rules would also apply to the linkage as required. In general, the definitions set forth in proposed Amex rule 941 would incorporate the definitions agreed to and contained in the Plan.

Proposed Amex rule 942 concerns the operation of the linkage. This proposed Amex rule incorporates section 7 of the Plan into the Amex's rules by dictating how certain orders are handled. In particular, proposed Amex rule 942 sets forth the pricing of Linkage Orders, the manner in which both Principal Acting as Agent (P/A) Orders and Principal Orders are sent through the linkage and how the Exchange handles linkage orders it may receive. Pursuant to proposed Amendment No. 4 to the Plan, a member of the Amex may reject an execution of certain Linkage orders received more than 20 seconds after sending the order. This is a reduction from the 30 second time period currently in the Plan. In effect, this proposed Amex rule establishes the conditions pursuant to which Amex specialists and registered options traders may enter linkage orders and imposes obligations on the Exchange regarding the processing of incoming linkage orders.

Proposed Amex rule 943 is an order protection rule concerned generally with the avoidance and satisfaction of trade-throughs. This proposed Amex rule contains the trade-through provisions required under section 8(c) of the Plan. First, this rule would establish a general standard that members should avoid trade-throughs as defined in proposed Amex rule 941. If a member does effect a trade-through, the member would be responsible for satisfying a member of another exchange pursuant to paragraphs (a)(2) and (c) of proposed Amex rule 943, subject to the exceptions outlined in paragraph (b) of the proposed Amex rule. The Exchange represents that both the satisfaction procedures and the exceptions to the satisfaction requirements incorporate relevant provisions of the Plan. Paragraph (d) of proposed Amex rule 943 would establish potential regulatory liability for members who repeatedly trade through other exchanges, whether or not the exchanges' traded-through are Participants in the Plan.

Proposed Amex rule 943 also reflects pending Amendment No. 4 to the Plan, which proposes to reduce from 30 seconds to 20 seconds the time period a member must wait for a response to a linkage order. If the member does not receive the response within 20 seconds, the member could trade through the non-responding exchange without liability. In addition, proposed Amex rule 943 also reflects pending Amendment No. 4 to the Plan, which proposes to limit liability for trade-throughs in the last few minutes of a trading day to 10 contracts per exchange. The Exchange represents that the purpose of that amendment is to provide protection for small customer orders, but also to limit the potential risk to members who may be unable to hedge options positions they assume near the close of trading.

Proposed Amex rule 944 addresses locked or crossed markets.[11] The Exchange represents that this proposed Amex rule implements section 7(a)(i)(C) of the Plan by indicating that locked and crossed markets should be avoided and providing procedures to unlock and uncross markets that do occur.

Proposed Amex rule 945 provides for a limitation on Principal Order access for Amex specialists and registered options traders. This proposed Amex Rule codifies the ''80/20 Test'' contained in Section 8(b)(iii) of the Plan. Specifically, a specialist or registered options trader on the Exchange would be restricted from sending Principal Orders through the linkage if the specialist or registered options trader effects less than 80 percent of specified order flow on the Exchange. The Exchange would apply this test on a calendar quarter basis.

With respect to the proposed fee change, the Exchange is proposing that its existing fees will apply to Principal Orders but will not impose fees on P/A Orders. The Amex currently does not impose transaction fees for customer orders, and Amex therefore believes that P/A Orders should similarly not be charged a transaction fee because such orders are essentially customer orders executed through the linkage. With respect to Principal Orders, existing transaction fees applicable to away market maker and specialist orders will apply equally to these linkage orders.

This proposal also specifies that existing Amex fees will not apply to Satisfaction Orders. Proposed Amendment No. 4 to the Plan proposes to prohibit a Participant from charging a fee to a member of another Participant that is seeking to satisfy customer orders on its book that were traded through.

[11] A ''Locked Market'' means a quotation in which the Exchange disseminates a bid (offer) in a series of an eligible option class at a price that equals the price of the offer (bid) for the series then being displayed from another participant exchange. A ''Crossed Market'' means a quotation in which the Exchange disseminates a bid (offer) in a series of an eligible option class at a price that is greater than (is less than) the price of the offer (bid) for the series then being displayed from another participant exchange.

2. Statutory Basis

The Exchange believes that the proposed rule change is consistent with section 6(b) of the Exchange Act,[12] in general, and furthers the objectives of section 6(b)(5),[13] in particular, in that it is designed to prevent fraudulent and manipulative acts and practices, to promote just and equitable principles of trade, to foster cooperation and coordination with persons engaged in facilitating transactions in securities, to remove impediments to and perfect the mechanism of a free and open market and a national market system, to protect investors and the public interest and is not designed to permit unfair discrimination between customers, issuers, brokers, or dealers. The Exchange also believes that the proposed fee change is also consistent with section 6(b)(4) of the Exchange Act[14] regarding the equitable allocation of reasonable dues, fees and other charges among exchange members and other persons using exchange facilities. With respect to the proposed disciplinary sanctions for engaging in a pattern of trade-throughs, the Exchange believes the proposal is consistent with section 6(b)(6) of the Exchange Act[15] requiring that an exchange have rules that provide for the appropriate discipline of members for violations of the Exchange Act, the rules and regulations thereunder, and the rules of the Exchange.

B. Self-Regulatory Organization's Statement on Burden on Competition

The Exchange does not believe that the proposed rule change will impose any burden on competition.

C. Self-Regulatory Organization's Statement on Comments on the Proposed Rule Change Received from Members, Participants or Others

The Exchange neither solicited nor received written comments with respect to the proposed rule change.

III. Date of Effectiveness of the Proposed Rule Change and Timing for Commission Action

Within 35 days of the date of publication of this notice in the **Federal Register** or within such longer period (i) as the Commission may designate up to 90 days of such date if it finds such longer period to be appropriate and publishes its reasons for so finding or (ii) as to which the Exchange consents, the Commission will:

[12] 15 U.S.C. 78f(b).

[13] 15 U.S.C. 78f(b)(5).

[14] 15 U.S.C. 78f(b)(4).

[15] 15 U.S.C. 78f(b)(6).

(A) By order approve such proposed rule change, or

(B) Institute proceedings to determine whether the proposed rule change should be disapproved.

IV. Solicitation of Comments

Interested persons are invited to submit written data, views and arguments concerning the foregoing, including whether the proposed rule change, as amended, is consistent with the Exchange Act. Persons making written submissions should file six copies thereof with the Secretary, Securities and Exchange Commission, 450 Fifth Street, NW., Washington, DC 20549–0609. Copies of the submission, all subsequent amendments, all written statements with respect to the proposed rule change that are filed with the Commission, and all written communications relating to the proposed rule change between the Commission and any person, other than those that may be withheld from the public in accordance with the provisions of 5 U.S.C. 552, will be available for inspection and copying in the Commission's Public Reference Room. Copies of such filing will also be available for inspection and copying at the principal office of the Amex. All submissions should refer to File No. SR-Amex-2002–84 and should be submitted by January 17, 2003.

For the Commission by the Division of Market Regulation, pursuant to delegated authority.[16]

Margaret H. McFarland,

Deputy Secretary.

[FR Doc. 02–32795 Filed 12–26–02; 8:45 am]

BILLING CODE 8010–01–P

[16] 17 CFR 200.30–3(a)(12).

SECURITIES AND EXCHANGE COMMISSION

[Release No. 34–47053; File No. SR–Amex–2002–107]

Self-Regulatory Organizations; Notice of Filing and Immediate Effectiveness of Proposed Rule Change by the American Stock Exchange LLC Relating to an Extension of a Temporary Waiver of Associate Member Fees for Persons Trading Nasdaq Securities Admitted to Unlisted Trading Privileges Through the Exchange's Electronic Order Routing Systems

December 19, 2002.

Pursuant to Section 19(b)(1) of the Securities Exchange Act of 1934 (''Act''),[1] and Rule 19b–4 thereunder,[2] notice is hereby given that on December 16, 2002, the American Stock Exchange LLC (''Amex'' or ''Exchange'') filed with the Securities and Exchange Commission (''Commission'' or ''SEC'') the proposed rule change as described in Items I, II and III below, which Items have been prepared by the Exchange. The Amex has designated this proposal as one establishing or changing a due, fee, or other charge imposed by the Exchange under Section 19(b)(3)(A)(ii) of the Act,[3] which renders the proposal effective upon filing with the Commission. The Commission is publishing this notice to solicit comments on the proposed rule change from interested persons.

I. Self-Regulatory Organization's Statement of the Terms of Substance of the Proposed Rule Change

The Exchange proposes to extend through March 31, 2003 the waiver of: (1) Membership Dues, Initiation Fee, Application Processing Fee, Initial Registration Fee and the Electronic Access Fee for new Associate Members that trade only Nasdaq stocks through the Exchange's electronic order routing systems during the period of the waiver, and (2) the Electronic Access Fee for existing Associate Members that currently do not have electronic access privileges and that trade only Nasdaq stocks through the Exchange's electronic order routing systems during the period of the waiver.

The proposed Fee schedule is available at the Office of the Secretary of the Amex and at the Commission.

II. Self-Regulatory Organization's Statement of the Purpose of, and Statutory Basis for, the Proposed Rule Change

In its filing with the Commission, the Exchange included statements concerning the purpose of and basis for its proposal and discussed any comments it received regarding the proposal. The text of these statements may be examined at the places specified in Item IV below. The Amex has prepared summaries, set forth in Sections A, B and C below, of the most significant aspects of such statements.

[1] 15 U.S.C. 78s(b)(1).

[2] 17 CFR 240.19b–4.

[3] 15 U.S.C. 78s(b)(3)(A)(ii).

A. Self-Regulatory Organization's Statement of the Purpose of, and Statutory Basis for, the Proposed Rule Change

1. Purpose

The Exchange is proposing to extend to March 31, 2003, the temporary waiver of Associate Member and Electronic Access Fees for broker/dealer firms that currently do not have electronic access to the Amex Order File (''AOF''). The waiver currently is set to expire on December 31, 2002 and applies to firms that trade only Nasdaq stocks through the Exchange's electronic order routing systems during the period of the waiver. Broker/dealers that become Associate Members during the waiver period will not have to pay: (1) 2002 and 2003 dues applicable to Associate members, (2) Associate Member Initiation Fee, (3) Application Processing Fee, (4) Initial Registration Fee, and (5) the Electronic Access Fee. Existing Associate Members that currently do not have electronic access to AOF also could upgrade to electronic access privileges without paying the customary Electronic Access Fee provided they trade only Nasdaq stocks through the Exchange's electronic order routing systems during the period of the fee waiver.

At the end of the waiver period, firms that become Associate Members during the waiver and trade only Nasdaq stocks through AOF would have to:

(1) Acquire a regular membership and pay the fees and dues associated with becoming a regular member,

(2) Continue their Associate Membership and pay: (i) 75% of the 2003 dues, (ii) the Associate Member Initiation Fee, (iii) Application Processing Fee, (iv) the Renewal Registration Fee, and (v) 75% of the Electronic Access Fee for 2003, or

(3) Terminate their Associate Membership.

New Associate Members that terminate their Associate Membership on or prior to March 31, 2003 will not have to pay 2002 and 2003 dues, Associate Member Initiation Fee, Application Processing Fee, Initial Registration Fee and Electronic Access Fee for 2002 and 2003.

At the end of the waiver period, firms that already were Associate Members prior to the waiver and upgraded to electronic access privileges during the waiver and traded only Nasdaq stocks through AOF would have to: (1) Acquire a regular membership and pay the fees and dues associated with becoming a regular member, or (2) pay the 2003 dues and Electronic Access Fee for 2003 applicable to Associate Members.

2. Statutory Basis

The Exchange believes that the proposal is consistent with Section 6(b) of the Act[4] in general and furthers the objectives of Section 6(b)(4) of the Act[5] in particular in that it is designed to provide for the equitable allocation of reasonable dues, fees, and other charges among Amex members and issuers and other persons using the Amex's facilities.

B. Self-Regulatory Organization's Statement on Burden on Competition

The proposed fee change will impose no burden on competition that is not necessary or appropriate in furtherance of the purposes of the Act.

C. Self-Regulatory Organization's Statement on Comments on the Proposed Rule Change Received From Members, Participants or Others

No written comments were solicited or received with respect to the proposed rule change.

III. Date of Effectiveness of the Proposed Rule Change and Timing for Commission Action

The proposed rule change has become effective pursuant to Section 19(b)(3)(A)(ii) of the Act[6] and subparagraph (f)(2) of Rule 19b–4 thereunder,[7] because it establishes or changes a due, fee, or other charge imposed by the Amex. At any time within 60 days of the filing of the proposed rule change, the Commission may summarily abrogate such rule change if it appears to the Commission that such action is necessary or appropriate in the public interest, for the protection of investors, or otherwise in furtherance of the purposes of the Act.

IV. Solicitation of Comments

Interested persons are invited to submit written data, views, and arguments concerning the foregoing, including whether the proposal is consistent with the Act. Persons making written submissions should file six copies thereof with the Secretary, Securities and Exchange Commission, 450 Fifth Street, NW., Washington, DC 20549–0609. Copies of the submission, all subsequent amendments, all written statements with respect to the proposed rule change that are filed with the Commission, and all written communications relating to the proposed rule change between the Commission and any person, other than those that may be withheld from the public in accordance with the provisions of 5 U.S.C. 552, will be available for inspection and copying in the Commission's Public Reference Room. Copies of such filing will also be available for inspection and copying at the principal office of the Amex. All submissions should refer to file number SR–Amex–2002–107 and should be submitted by January 17, 2003.

For the Commission, by the Division of Market Regulation, pursuant to delegated authority.[8]

J. Lynn Taylor,

Assistant Secretary.

[FR Doc. 02–32796 Filed 12–26–02; 8:45 am]

BILLING CODE 8010–01–P

[4] 15 U.S.C. 78f(b).

[5] 15 U.S.C. 78f(b)(4).

[6] 15 U.S.C. 78s(b)(3)(A)(ii).

[7] 17 CFR 240.19b–4(f)(2).

[8] 17 CFR 200.30–3(a)(12).

SECURITIES AND EXCHANGE COMMISSION

[Release No. 34–47031; File No. SR–BSE–2002–05]

Self-Regulatory Organizations; Notice of Filing of Proposed Rule Change and Amendment Nos. 1, 2, and 3 Thereto by the Boston Stock Exchange, Inc. Relating to the Trading of Nasdaq Securities on the Exchange

December 18, 2002.

Pursuant to Section 19(b)(1) of the Securities Exchange Act of 1934 (''Act''),[1] and Rule 19b–4 thereunder,[2] notice is hereby given that on May 13, 2002, the Boston Stock Exchange, Inc. (''BSE'' or ''Exchange'') filed with the Securities and Exchange Commission (''Commission'') the proposed rule change as described in Items I, II, and III below, which Items have been prepared by the Exchange. The BSE amended the proposed rule change on June 13, 2002,[3] on October 22, 2002,[4] and on November 21, 2002.[5] The Commission is publishing this notice to solicit comments on the proposed rule change, as amended, from interested persons.

[1] 15 U.S.C. 78s(b)(1).

[2] 17 CFR 240.19b–4.

[3] *See* letter from John Boese, Assistant Vice President, Legal and Regulatory, BSE, to Katherine England, Assistant Director, Division of Market Regulation, Commission, dated June 12, 2002 (''Amendment No. 1'').

[4] *See* File No. SR–BSE–2002–05, Amendment No. 2, dated October 18, 2002 (''Amendment No. 2'').

[5] *See* File No. SR–BSE–2002–05, Amendment No. 3, dated November 20, 2002 (''Amendment No. 3'').

I. Self-Regulatory Organization's Statement of the Terms of Substance of the Proposed Rule Change

The Exchange proposes to amend its trading rules for securities listed on The Nasdaq Stock Market, Inc. (''Nasdaq'') to allow for extended hours and remote trading of Nasdaq securities. The text of the proposed rule change, as amended, is below. Proposed new language is in italics; proposed deletions are in brackets.

* * * * *

Chapter XXXV

Trading in Nasdaq Securities

* * * * *

Dealings on the Floor—Hours

Section 8. [Pursuant to Chapter I–B, Sec. 2, Dealings on the Floor—Hours, no member or member organization shall make any bid, offer or transaction upon the floor of the Exchange, issue a commitment to trade through ITS or send an order for a Nasdaq security to a Nasdaq System market maker other than during the hours the Exchange is open for the transaction of business. Nasdaq securities will not be eligible to participate in the Post Primary Session.] *For the purposes of transacting business in Nasdaq securities only, the Exchange shall be open from 7:00 a.m. until 6:30 p.m. Only transactions in Nasdaq securities will be permitted outside the hours of 9:30 a.m. and 4:15 p.m., in accordance with Chapter I–B, Business Hours, Section 1, Primary Session, and Section 1(a) Post Primary Session.*

Remote Trading in Nasdaq Securities

Section 31. Nasdaq trading terminals and related equipment will be provided to remote member firm locations for specialist trading. The remote terminals will be linked to the Exchange's Nasdaq trading system and will provide the same functionality as is available to on-floor specialists. There will be no remote Nasdaq floor brokerage services. Floor broker orders will be routed to remote specialists under the same criteria by which they are routed to on-floor specialists.

(a) All rules and policies of the Board of Governors of the Exchange shall apply except as specifically excluded or amended under this section.

(b) Any eligible firm may apply to the Market Performance Committee to participate in the program. All applicants must meet the current minimum requirements for Nasdaq specialists set forth in Chapters XV and XXXV, including, but not limited to their background, experience, staffing, training procedures, adequacy of

applicant's proposed confidentiality policy, adequacy of applicant's contingency plans for communication or technical failures, adequacy of applicant's offsite facilities, performance standards (as measured by the Exchanges SPEP and Best Execution programs), and the minimum margin, capital and equity requirements as set forth in Chapters VIII and XXII of the Rules of the Exchange, and conform to all other performance requirements and standards set forth in the Rules of the Exchange.

(c) Unless the Market Performance Committee specifically authorizes otherwise, participating member firms shall be prohibited from trading remotely any Nasdaq securities which are currently being traded on-floor by that individual member firm. In evaluating a member firm's petition for changing the location of where a particular security is traded, the Market Performance Committee shall consider the application in light of the requirements set forth in paragraph (b) above. Individual securities, however, may not be traded by one specialist firm in more than one location under any circumstances.

(d) The number of Nasdaq stocks traded remotely shall not exceed two hundred (200) per specialist account.

(e) All rule references pertaining to the trading floor of the Exchange shall be deemed to include any trading done remotely through the Exchange's Nasdaq trading system, and all such trades shall be deemed to be Boston executions.

(f) A written confidentiality policy regarding the location and access to information, terminals and equipment must be adopted by the firm and filed with and approved by the Exchange prior to the commencement of remote trading. Specifically, this policy must conform to the requirements set forth in Chapter II, Section 36 (Specialist Member Organizations Affiliated with an Approved Person), and Section 37 (ITSFEA Procedures) of the Rules of the Board of Governors of the Boston Stock Exchange. In accordance therewith, reasonable principles must be applied to limit access by non-specialists to Remote Specialist facilities and information, and to limit Remote Specialist access to and from other proprietary trading venues, including access from outcry or visible communication, intentional or otherwise.

(g) Floor policies regarding dress code, and smoking shall not apply. Access to the area designated as that of the Remote Specialist's shall be restricted to the specialist, backup specialist, clerks, designated management of the specialist, and Exchange authorized personnel, consistent with the Rules of the Exchange, including, but not limited to, ''Chinese Wall'' procedures set forth in Chapter II, Section 36, (Specialist Member Organizations Affiliated with an Approved Person), and procedures set forth in Chapter XV, Section 6 (The Specialist's Book).

(h) All Exchange correspondence, memoranda, bulletins and other publications shall be sent to the Exchange's Nasdaq Remote Specialists via electronic means and via U.S. mail or overnight delivery.

(i) All Exchange Nasdaq Remote specialists will have stentofon, (or a similarly operational speakerphone), as well as dedicated telephone access, to the physical trading floor. Any regulatory requirements including trading halts, trading practices, policies, procedures or rules requiring floor official involvement will be coordinated by Exchange personnel with the remote specialist through the dedicated telephone line.

(j) Servicing of the Exchange's Nasdaq trading system terminals and related equipment shall be by Exchange authorized and trained personnel only.

(k) The Exchange's examination program of non-DEA floor members would include the remote specialist operations. Every firm must submit specific supervisory procedures relating to the Remote Specialist operations and appropriate identification of all individuals who will have access to the Remote Specialist operation, including all supervisory personnel.

(l) Any arbitration or disciplinary action arising out of trading activity pursuant to this section would be held at the physical offices of the Exchange located in Boston.

(m) Each remote Nasdaq trading terminal assigned and registered by the Exchange will require an ETP, and will be subject to the following:

(1) Each approved Specialist unit may be authorized to trade up to 200 issues.

(2) Each Specialist unit must have at least one registered Exchange seat assigned to the approved specialist.

(a) A specialist may be authorized to obtain additional ETPs for qualified registered clerks to access the Nasdaq trading system in support of the Specialist unit.

(b) All Specialists and registered clerk ETP holders must be approved by the Market Performance Committee and must meet the following:

(i) file an ETP application form with the BSE Surveillance Department;

(ii) completion of the required floor training program;

(iii) successful completion of the BSE floor examination within 90 days of application;

(iv) successful completion of the Series 63 (NASAA Uniform State Law Exam), and registration with the Commonwealth of Massachusetts, and;

(v) submission of fingerprint records to the BSE.

* * * * *

II. Self-Regulatory Organization's Statement of the Purpose of, and Statutory Basis for, the Proposed Rule Change

In its filing with the Commission, the Exchange included statements concerning the purpose of and basis for the proposed rule change and discussed any comments it received on the proposed rule change, as amended. The text of these statements may be examined at the places specified in Item IV below. The Exchange has prepared summaries, set forth in Sections A, B, and C below, of the most significant aspects of such statements.

A. Self-Regulatory Organization's Statement of the Purpose of, and Statutory Basis for, the Proposed Rule Change

1. Purpose

The purpose of the proposed rule change is to amend one section of Chapter XXXV of its Rules related to the trading of Nasdaq securities on the Exchange and to add a new section to the chapter, extending the Exchange's remote trading program to include Nasdaq securities.

The Exchange is proposing an alteration of the hours the Exchange seeks to be open for trading Nasdaq securities. Chapter XXXV, Trading in Nasdaq Securities, Section 8, Dealings on the Floor—Hours, limits the hours of trading in Nasdaq securities on the Exchange to the hours of 9:30 a.m. to 4 p.m. The Exchange will delete the present rule and replace it with one that will permit the transaction of business, in Nasdaq securities only, between the hours of 7 a.m. and 6:30 p.m. Such an extension of hours will allow Exchange specialists who trade Nasdaq securities to remain competitive with their counterparts on other exchanges that trade Nasdaq securities pursuant to unlisted trading privileges (''UTP''), as well as NASD member market makers who are permitted to conduct transactions in Nasdaq securities during this extended period. Furthermore, such extended hours are contemplated and permitted by Article XI of the Joint Self-

Regulatory Organization Plan Governing the Collection, Consolidation and Dissemination of Quotation and Transaction Information for Nasdaq-Listed Securities Traded on Exchanges on an Unlisted Trading Privilege Basis (''UTP Plan'').

The Exchange is also proposing to adopt rules based on its BEACON Remote trading program but modified for Nasdaq securities. As such, the Exchange will republish, in large part, its remote trading rules located in Chapter XXXIII, BEACON, Section 9, BEACON Remote, as a new section 31 in Chapter XXXV, Trading in Nasdaq Securities. As part of the remote trading program, the Exchange will denote separately a rule for the Exchange's Nasdaq trading program. In so doing, the substance of the remote trading rule will not change. For instance, all requirements relating to the applicability of other BSE rules, confidentiality, ''Chinese Walls,'' communications, and Electronic Trading Permits will still apply. The only deletions or amendments will be those necessary to make the rule applicable to the Nasdaq program, such as deleting references to the BEACON trading system, which is presently designed for the trading of listed securities on the Exchange. Such changes will be administrative and non-substantive in nature.

2. Statutory Basis

The Exchange believes that the proposed rule change is consistent with the provisions of Section 6(b) of the Act,[6] in general, and Section 6(b)(5) of the Act,[7] in particular, which requires, among other things, that the rules of an exchange be designed to promote just and equitable principles of trade, to foster cooperation and coordination with persons engaged in regulating transactions in securities, to remove impediments to and perfect the mechanism of a free and open market and a national market system, and, in general, to protect investors and the public interest.

B. Self-Regulatory Organization's Statement on Burden on Competition

The Exchange does not believe that the proposed rule change will impose any burden on competition that is not necessary or appropriate in furtherance of the purposes of the Act.

[6] 15 U.S.C. 78f(b).

[7] 15 U.S.C. 78f(b)(5).

C. Self-Regulatory Organization's Statement on Comments on the Proposed Rule Change Received From Members, Participants or Others

The Exchange has neither solicited nor received written comments on the proposed rule change.

III. Date of Effectiveness of the Proposed Rule Change and Timing for Commission Action

Within 35 days of the date of publication of this notice in the **Federal Register** or within such longer period (i) as the Commission may designate up to 90 days of such date if it finds such longer period to be appropriate and publishes its reasons for so finding or (ii) as to which the Exchange consents, the Commission will:

(A) by order approve such proposed rule change, or

(B) institute proceedings to determine whether the proposed rule change should be disapproved.

IV. Solicitation of Comments

Interested persons are invited to submit written data, views, and arguments concerning the foregoing, including whether the proposed rule change is consistent with the Act. Persons making written submissions should file six copies thereof with the Secretary, Securities and Exchange Commission, 450 Fifth Street, NW., Washington, DC 20549–0609. Copies of the submission, all subsequent amendments, all written statements with respect to the proposed rule change that are filed with the Commission, and all written communications relating to the proposed rule change between the Commission and any person, other than those that may be withheld from the public in accordance with the provisions of 5 U.S.C. 552, will be available for inspection and copying in the Commission's Public Reference Room. Copies of such filing will also be available for inspection and copying at the principal office of the Exchange. All submissions should refer to File No. SR–BSE–2002–05 and should be submitted by January 17, 2003.

For the Commission, by the Division of Market Regulation, pursuant to delegated authority.[8]

J. Lynn Taylor,

Assistant Secretary.

[FR Doc. 02–32736 Filed 12–26–02; 8:45 am]

BILLING CODE 8010–01–P

[8] 17 CFR 200.30–3(a)(12).

SECURITIES AND EXCHANGE COMMISSION

[Release No. 34–47052; File No. SR–CBOE–2002–61]

Self-Regulatory Organizations; Notice of Filing of Proposed Rule Change by the Chicago Board Options Exchange, Inc. Relating to Rules Implementing the Options Intermarket Linkage Plan

December 19, 2002.

Pursuant to section 19(b)(1) of the Securities Exchange Act of 1934 (''Exchange Act''),[1] and Rule 19b–4 thereunder,[2] notice if hereby given that on October 9, 2002, the Chicago Board Options Exchange, Incorporated (''Exchange'' or ''CBOE'') filed with the Securities and Exchange Commission (''Commission'') the proposed rule change as described in Items I, II, and III below, which Items have been prepared by the CBOE. The Commission is publishing this notice to solicit comments on the proposed rule change from interested persons.

I. Self Regulatory Organization's Statement of the Terms of Substance of the Proposed Rule Change

The Exchange proposes to adopt rules implementing the options intermarket linkage. The text of the proposed rule change is below; proposed new language is italicized.

Chicago Board Options Exchange, Incorporated Rules

* * * * *

CHAPTER VI

* * * * *

Doing Business on the Exchange Floor

* * * * *

Section E: Intermarket Linkage

Rule 6.80. Definitions

The following terms shall have the meaning specified in this Rule solely for the purpose of this Section E under Chapter VI:

(1) ''Aggrieved Party'' means a member of a Participant Exchange whose bid or offer was traded-through.

(2) ''Block Trade'' means a trade on a Participant Exchange that:

(i) involves 500 or more contracts and has a premium value of at least $150,000;

(ii) is effected at a price outside of the NBBO; and

(iii) involves either:

[1] 15 U.S.C. 78s(b)(1).

[2] 17 CFR 240.19b–4.

(A) a cross (where a member of the Participant Exchange represents all or a portion of both sides of the trade), or

(B) any other transaction (i.e., in which such member represents an order of block size on one side of the transaction only) that is not the result of an execution at the current bid or offer on the Participant Exchange.

Contemporaneous transactions at the same price on a Participant Exchange shall be considered a single transaction for the purpose of this definition.

(3) ''Broker/Dealer'' means an individual or organization registered with the United States Securities and Exchange Commission in accordance with Section 15(b)(1) of the Exchange Act or foreign broker or dealer exempt from such registration pursuant to Rule 15a–6 under the Exchange Act.

(4) ''Complex Trade'' means the execution of an order in an options series in conjunction with the execution of one or more related order(s) in different options series in the same underlying security occurring at or near the same time for the equivalent number of contracts and for the purpose of executing a particular investment strategy.

(5) ''Crossed Market'' means a quotation in which the Exchange disseminates a bid (offer) in a series of an Eligible Option Class at a price that is greater than (less than) the price of the offer (bid) for the series then being displayed from another Participant Exchange.

(6) ''Customer'' means an individual or organization that is not a Broker/Dealer. Used with reference to a Linkage Order, it means an order which, if executed, would result in the purchase or sale for an account in which no Broker/Dealer has an interest.

(7) ''Eligible Market-Maker,'' with respect to an Eligible Option Class, means a Market-Maker that:

(i) Is assigned to, and is providing two-sided quotations in, the Eligible Option Class;

(ii) is participating in the Exchange's automatic execution system, if available, in such Eligible Option Class; and

(iii) is in compliance with the requirements of Rule 6.85.

(8) ''Eligible Option Class'' means all option series overlying a security (as that term is defined in Section 3(a)(10) of the Exchange Act) or group of securities, including both put options and call options, which class is traded on the Exchange and at least one other Participant Exchange.

(9) ''Firm Customer Quote Size'' with respect to a P/A Order means the lesser of (a) the number of option contracts that the participant Exchange sending a P/A Order guarantees it will automatically execute at its disseminated quotation in a series of an Eligible Option Class for Customer orders entered directly for execution in that market; or (b) the number of option contracts that the Participant Exchange receiving a P/A Order guarantees it will automatically execute at its disseminated quotation in series of an Eligible Option Class for Customer orders entered directly for execution in that market. The Firm Customer Quote Size will be at least 10 contracts for each series of an Eligible Option Class.

(10) ''Firm Principal Quote Size'' means the number of options contracts that a Participant Exchange guarantees it will execute at its disseminated quotation for incoming Principal Orders in an Eligible Option Class. This number shall be no fewer than 10.

(11) ''Linkage'' means the systems and data communications network that links electronically the Participant Exchanges for the purposes specified in the Plan.

(12) ''Linkage Order'' means an order routed through the Linkage as permitted under the Plan. There are three types of Linkage Orders:

(1) ''Principal Acting as Agent (''P/A'') Order,'' for the principal account of a Market-Maker (or equivalent entity on another Participant Exchange that is authorized to represent Customer orders) reflecting the terms of a related unexecuted Customer order for which the Market-Maker is acting as agent;

(ii) ''Principal Order,'' which is an order for the principal account of an Eligible Market-Maker (or equivalent entity on another Participant Exchange) and is not a P/A Order; and

(iii) ''Satisfaction Order,'' which is an order sent through the Linkage to notify a Participant Exchange of a Trade-Through and to seek satisfaction of the liability arising from that Trade-Through.

(13) ''Locked Market'' means a quotation in which the Exchange disseminates a bid (offer) in a series of an Eligible Option Class at a price that equals the price of the offer (bid) for the series then being displayed from another Participant Exchange.

(14) ''NBBO'' means the national best bid and offer in an options series as calculated by the Exchange.

(15) ''Non-Firm'' means, with respect to quotations, that members of a Participant Exchange are relieved of their obligation to be firm for their quotations pursuant to Rule 11Ac1–1 under the Exchange Act.

(16) ''Participant Exchange'' means a registered national security exchange that is a party to the Plan.

(17) ''Plan'' means the Plan for the Purpose of Creating and Operating an Intermarket Option Linkage, as such plan may be amended from time to time.

(18) ''Reference Price'' means the limit price attached to a Linkage Order by the sending Participant Exchange. Except with respect to a Satisfaction Order, the Reference Price is equal to the bid disseminated by the receiving Participant Exchange at the time that the Linkage Order is transmitted in the case of a Linkage Order to sell and the offer disseminated by the receiving Participant Exchange at the time that the Linkage Order is transmitted in the case of a Linkage Order to buy. With respect to a Satisfaction Order, the Reference Price is the price that the member in the sending Participant Exchange is entitled to receive in satisfaction of a Trade-Through complaint under the Plan.

(19) ''Trade-Through'' means a transaction in an options series at a price that is inferior to the NBBO.

(20) ''Third Participating Market Center Trade-Through'' means a Trade-Through in a series of an Eligible Option Class that is effected by executing a Linkage Order, and such execution results in a sale (purchase) at a price that is inferior to the best bid (offer) being disseminated by another Participant Exchange.

(21) ''Verifiable Number of Customer Contracts'' mean the number of Customer contracts in the book of a Participant Exchange.

Rule 6.81. Operation of the Linkage

By subscribing to the Plan, the Exchange has agreed to comply with, and enforce compliance by its members with, the Plan. In this regard, the following shall apply:

(a) Pricing. Members may send P/A Orders and Principal Orders through the Linkage only if such orders are priced at the NBBO.

(b) P/A Orders.

(1) Sending of P/A Orders for Sizes No Larger than the Firm Customer Quote Size. A Market-Maker may send through the Linkage a P/A Order for execution in the automatic execution system of a Participant Exchange if the size of such P/A Order is no larger than the Firm Customer Quote Size. Except as provided in subparagraph (b)(2)(ii) below, a Market-Maker may not break up an order of a Customer that is larger than the Firm Customer Quote Size into multiple P/A Orders, one or more which is equal to or smaller than the Firm

Customer Quote Size, so that such orders could be represented as multiple P/A Orders through the Linkage.

(2) Sending of P/A Orders for Sizes Larger than the Firm Customer Quote Size. If the size of a P/A Order is larger than the Firm Customer Quote Size, a Market-Maker may send through the Linkage such P/A Order in one of two ways:

(i) The Market-Maker may send a P/A Order representing the entire Customer order. If the receiving Participant Exchange's disseminated quotation is equal to or better than the Reference Price when the P/A Order arrives at that market, that exchange will execute the P/A Order at its disseminated quotation for at least the Firm Customer Quote Size. Within 15 seconds of receipt of such order, the receiving Participant Exchange will inform the Market-Maker of the amount of the order executed and the amount, if any, that was canceled.

(ii) Alternatively, the Market-Maker may send an initial P/A Order for the Firm Customer Quote Size pursuant to subparagraph (b)(1) above. If the Participant Exchange executes the P/A Order and continues to disseminate the same quotation at the NBBO 15 seconds after reporting the execution of the initial P/A Order, the Market-Maker may send an additional P/A Order to the same Participant Exchange. If sent, such additional P/A Order must be for at least the lesser of 100 contracts or the entire remainder of the Customer order.

In any situation where a receiving Participant Exchange does not execute a P/A Order in full, such exchange is required to move its quotation to a price inferior to the Reference Price of the P/A Order.

(c) Principal Orders.

(1) Sending of an Initial Principal Order. An Eligible Market-Maker may send a Principal Order through the Linkage at a price equal to the NBBO. Subject to the next paragraph, if the Principal Order is not larger than the Firm Principal Quote Size, the receiving Participant Exchange will execute the order in its automatic execution system, if available, if its disseminated quotation is equal to or better than the price specified in the Principal Order when that order arrives at the receiving Participant Exchange. If the Principal Order is larger than the Firm Principal Quote Size, the receiving Participant will (a) execute the Principal Order at its disseminated quotation for at least the Firm Principal Quote Size and (b) within 15 seconds of receipt of such order, reply to the sending Participant Exchange, informing such Participant Exchange of the amount of the order that was executed and the amount, if any, canceled. If the receiving Participant Exchange does not execute the Principal Order in full, it will move its quote to a price inferior to the Reference Price of the Principal Order.

(2) Receipt of Multiple Principal Orders. Once the Exchange provides an automatic execution of a Principal Order in a series of an Eligible Option Class (the "initial execution"), the Exchange may reject any Principal Order(s) in the same Eligible Option Class sent by the same Participant Exchange for 15 seconds after the initial execution unless: (1) there is a change of price in the Exchange's disseminated offer (bid) in the series of the Eligible Option Class in which there was an initial execution; and (2) such price continues to be the NBBO. After this 15 second period, and until the sooner of (a) one minute after the initial execution or (b) a change in the Exchange's disseminated bid (offer), the Exchange is not obligated to provide an automatic execution for any Principal Orders in the same Eligible Option Class received from the Participant Orders in the same Eligible Option Class received from the Participant Exchange that sent the order resulting in the initial execution, and thus may treat any such Principal Orders as being greater than the Firm Principal Quote Size.

(d) Responses to Linkage Orders.

(1) Failure to Receive a Timely Response. A Member who does not receive a response to a P Order or a P/A Order within 20 seconds of sending the order may reject any response received thereafter purporting to report an execution of all or part of that order. The Member so rejecting the response shall inform the Participant Exchange sending that response of the rejection within 15 seconds of receipt of the response.

(2) Failure to Send a Timely Response. If a Member responds to a P Order or P/A Order more than 20 seconds after receipt of that order, and the Participant Exchange to whom the Member responded cancels such response, the Member shall cancel any trade resulting from such order and shall report the cancellation to OPRA.

(e) Receipt of Orders. The Exchange will provide for the execution of P/A Orders and Principal Orders if its disseminated quotation is (i) equal to or better than the Reference Price, and (ii) equal to the then-current NBBO. If the size of a P/A Order or Principal Order is not larger than the Firm Customer Quote Size or Firm Principal Quote Size, respectively, the Exchange will provide for the execution of the entire order, and shall execute such order in its automatic execution system if that system is available. If the size of a P/A Order or Principal Order is larger than the Firm Customer Quote Size or Firm Principal Quote Size, respectively, the Market-Maker must address the order within 15 seconds to provide an execution for at least the Firm Customer Quote Size or Firm Principal Quote Size, respectively. If the order is not executed in full, the Exchange will move its disseminated quotation to a price inferior to the Reference Price.

Rule 6.83. Order Protection

(a) Avoidance and Satisfaction of Trade-Throughs.

(1) General Provisions. Absent reasonable justification and during normal market conditions, members should not effect Trade-Throughs. Except as provided in paragraph (b) below, if a member effects a Trade-Through with respect to the bid or offer of a Participant Exchange in an Eligible Option Class and the Exchange receives a complaint thereof from an Aggrieved Party, either:

(i) the member who initiated the Trade-Through shall satisfy, or cause to be satisfied, through the Linkage the Aggrieved Party in accordance with subparagraph (a)(2) below; or

(ii) if the member elects not to do so (and, in the case of Third Participating Market Center Trade-Through, the member obtains the agreement of the contra party that received the Linkage Order that caused the Trade-Through), then the price of the transaction that constituted the Trade-Through shall be corrected to a price at which a Trade-Through would not have occurred. If the price of the transaction is corrected, the Member correcting the price shall report the corrected price to OPRA, notify the Aggrieved Party of the correction and cancel the Satisfaction Order.

(2) Price and Size. The price and size at which a Satisfaction Order shall be filled is as follows:

(i) Price. A Satisfaction Order shall be filled at the Reference Price. However, if the Reference Price is the price of an apparent Block Trade that caused the Trade-Through, and such trade was not, in fact, a Block Trade, then the Member may cancel the Satisfaction Order. In that case, the Member shall inform the Aggrieved Party within three minutes of receipt of the Satisfaction Order of the reason for the cancellation. Within three minutes of receipt of such cancellation, the Aggrieved Party may resend the Satisfaction Order with a Reference Price of the bid or offer that was traded through.

(ii) Size. An Aggrieved Party may send a Satisfaction Order up to the size of the

Verifiable Number of Customer Contracts that were included in the disseminated bid or offer that was traded through. Subject to subparagraph (2)(i) above and paragraph (b) below, a Member shall fill in full all Satisfaction Orders it receives following a Trade-Through, subject to the following limitations:

(A) If a number of contracts to be satisfied exceeds the size of the transaction that caused the Trade-Through, the size of the Satisfaction Order(s) that must be filled with respect to each Participant Exchange(s) shall be limited to the size of the transaction that caused the Trade-Through, and the remainder of any Satisfaction Order(s) shall be canceled;

(B) If the transaction that caused the Trade-Through was for a size larger than the Firm Customer Quote Size with respect to any of the Participant Exchange(s) traded through, the total number of contracts to be filled, with respect to all Satisfaction Orders received, shall not exceed the size of the transaction that caused the Trade-Through. In that case, the Member shall fill the Satisfaction Orders pro rata based on the Verifiable Number of Customer Contracts traded through on each Participant Exchange, and shall cancel the remainder of such Satisfaction Order(s); and

(C) Notwithstanding paragraphs (A) and (B) above, if the transaction that caused the Trade-Through occurred during the five minutes prior to the regularly-scheduled close of trading in the principal market in which the underlying security is traded, the maximum number of contracts to be satisfied with respect to any one Participant Exchange is 10 contracts.

(3) Rejection of Fills of Satisfaction Orders. Within 30 seconds of receipt of notification that another Participant Exchange has filled a Member's Satisfaction Order, the Member that sent the Satisfaction Order may reject such fill, but only to the extent that either: (i) the order(s) for the customer contracts underlying the Satisfaction Order already have been filled; or (2) the customer order(s) to buy (sell) the contracts underlying the Satisfaction Order were canceled.

(4) Protection of Customers. Whenever subparagraph (a)(1) applies, if Public Customer order (or P/A Orders representing Public Customer orders) constituted either or both sides of the transaction involved in the Trade-Through, each such Public Customer order (or P/A Order) shall receive:

(i) the price that caused the Trade-Through; or

(ii) the price at which the bid or offer traded through was satisfied, if it was satisfied pursuant to subparagraph (a)(1)(i), or the adjusted price, if there was an adjustment, pursuant to subparagraph (a)(1)(ii),

whichever price is most beneficial to the Public Customer order. Resulting differences in prices shall be the responsibility of the Member who initiated the Trade-Through.

(1) The Member who initiated the Trade-Through made every reasonable effort to avoid the Trade-Through, but was unable to do so because of a systems/equipment failure or malfunction;

(2) the Member trade through the market of a Participant Exchange to which such Member had sent a P/A Order or Principal Order, and within 20 seconds of sending such order the receiving Participant Exchange had neither executed the order in full nor adjusted the quotation traded through to a price inferior to the Reference Price of the P/A Order or Principal Order;

(3) the bid or offer traded through was being disseminated from a Participant Exchange whose quotes were Non-Firm with respect to such Eligible Option Class;

(4) the Trade-Through was other than a Third Participating Market Center Trade-Through and occurred during a period when, with respect to the Eligible Option Class, the Exchange's quotes were Non-Firm; provided, however, that, unless one of the other conditions of this paragraph (b) applies, during any such period: (i) Members shall make every reasonable effort to avoid trading through the firm quotes of another Participant Exchange; and (ii) it shall not be considered an exception to paragraph (a) if a Member regularly trades through the firm quotes of another Participant Exchange during such period;

(5) the bid or offer traded through was being disseminated by a Participant Exchange during a trading rotation in the Eligible Option Class;

(6) the transaction that caused the Trade-Through occurred during a trading rotation;

(7) the transaction that caused the Trade-Through was the execution of a Complex Trade;

(8) in the case of a Trade-Through other than a Third Participating Market Center Trade-Through, a Satisfaction Order with respect to the Trade-Through was not received by the Exchange from Aggrieved Party promptly following the Trade-Through and, in any event, (i) except in the final five minutes of trading, within three minutes from the time the report of the transaction(s) that constituted the Trade-Through was disseminated over OPRA, and (ii) in the final five minutes of trading, within one minute from the time the report of the transaction(s) that constituted the Trade-Through was disseminated over OPRA; or

(9) in the case of a Third Participating Market Center Trade-Through, a Satisfaction Order with respect to the Trade-Through was not received by the Exchange promptly following the Trade-Through. In applying this provision, the Aggrieved Party must send the Exchange a Satisfaction Order within three minutes from the time the report of the transaction that constituted the Trade-Through was disseminated over OPRA. To avoid liability for the Trade-Through, the Member receiving such Satisfaction Order must cancel the Satisfaction Order and inform the Aggrieved Party of the identity of the Participant Exchange that initiated the Trade-Through within three minutes of the receipt of such Satisfaction Order (within one minute in the final five minutes of trading). The Aggrieved Party then must send the Participant Exchange that initiated the Trade-Through a Satisfaction Order within three minutes of receipt of the cancellation of the initial Satisfaction Order (within one minute in the final five minutes of trading).

(c) Responsibilities and Rights Following Receipt of Satisfaction Orders.

(1) When a Member receives a Satisfaction Order, that Member shall respond as promptly as practicable pursuant to Exchange procedures by either:

(i) specifying that one of the exceptions to Trade-Through liability specified in paragraph (b) above is applicable and identifying that particular excpetion; or

(ii) taking the appropriate corrective action pursuant to paragraph (a) above.

(2) If the Member who initiated the Trade-Through fails to respond to a Satisfaction Order or otherwise fails to take the corrective action required under paragraph (a) within three minutes of receiving notice of a Satisfaction Order, and the Exchange determines that:

(i) there was a Trade-Through; and

(ii) none of the exceptions to Trade-Through liability specified in paragraph (b) above were applicable;

then, subject to the next paragraph, the Member who initiated the Trade-Through shall be liable to the Aggrieved Party for the amount of the actual loss resulting from non-compliance with

paragraph (a) and caused by the Trade-Through. If either (a) the Aggrieved Party does not establish the actual loss within 30 seconds from the time the Aggrieved Party received the response to its Satisfaction Order (or, in the event that it did not receive a response, within four minutes from the time the Aggrieved Party sent the Satisfaction Order) or (b) the Aggrieved Party does not notify the Exchange Participant that initiated the Trade-Through of the amount of such loss within one minute of establishing the loss, then the liability shall be the lesser of the actual loss or the loss caused by the Trade-Through that the Aggrieved Party would have suffered had that party purchased or sold the option series subject to the Trade-Through at the ''mitigation price.''

The ''mitigation price'' is the highest reported bid (in the case where an offer was traded through) or the lowest reported offer (in the case where a bid was traded through), in the series in question 30 seconds from the time the Aggrieved Party received the response to its Satisfaction Order (or, in the event that it did not receive a response, four minutes from the time the Aggrieved Party sent the Satisfaction Order). If the Participant Exchange receives a Satisfaction Order within the final four minutes of trading (on any day except the last day of trading prior to the expiration of the series which is the subject of the Trade-Through), then the mitigation price shall be the price established at the opening of trading in that series on the Aggrieved Party's Participant Exchange on the next trading day. However, if the price of the opening transaction is below the opening bid or above the opening offer as established during the opening rotation, then the mitigation price shall be the opening bid (in the case where an offer was traded through) or opening offer (in the case where a bid was traded through). If the Trade-Through involves a series that expires on the day following the day of the Trade-Through and the Satisfaction Order is received within the four minutes of trading, the ''mitigation price'' shall be the final bid (in the case where an offer was traded through) or offer (in the case where a bid was traded through) on the day of the trade that resulted in the Trade-Through.

(3) A Member that is an Aggrieved Party under the rules of another Participant Exchange governing Trade-Through liability must take steps to establish and mitigate any loss such Member might incur as a result of the Trade-Through of the Member's bid or offer. In addition, the Member shall give prompt notice to the other Participant Exchange of any such action in accordance with subparagraph (c)(2) above.

(d) Limitations on Trade-Throughs. Members may not repeatedly trade through better prices available on other exchanges, whether or not the exchange or exchanges whose quotations are traded through are Participant Exchanges, unless one or more of the provisions of paragraph (b) above are applicable. In applying this provision:

(1) The Exchange will consider there to have been a Trade-Through if a Member executes a trade at a price inferior to the NBBO even if the Exchange does not receive a Satisfaction Order from an Aggrieved Party pursuant to subparagraph (a)(1);

(2) The Exchange will not consider there to have been a Trade-Through if a Member executed a Block Trade at a price inferior to the NBBO if such Member satisfied all Aggrieved Parties pursuant to subparagraph (a)(2) following the execution of the Block Trade; and

(3) The Exchange will not consider there to have been a Trade-Through if a Member executes a trade at a price inferior to the quotation being disseminated by an exchange that is not a Participant Exchange if the Member made a good faith effort to trade against the superior quotation of the non-Participant Exchange prior to trading through that quotation. A ''good faith effort'' to reach a non-Participant Exchange's quotation requires that a Member at least had sent an order that day to the non-Participant Exchange in the class of options in which there is a Trade-Through, at a time at which such non-Participant Exchange was not relieved of its obligation to be firm for its quotations pursuant to Rule 11 Ac1–1 under under the Exchange Act, and such non-Participant Exchange neither executed that order nor moved its quotation to a price inferior to the price of the Member's order within 20 seconds of receipt of that order.

Rule 6.84. Locked and Crossed Markets

(a) Eligible Market-Maker Locking or Crossing a Market. An Eligible Market-Maker that creates a Locked Market or a Crossed Market shall unlock (uncross) that market or shall direct a Principal Order through the Linkage to trade against the bid or offer that the Eligible Market-Maker locked (crossed).

(b) Members Other than an Eligible Market-Maker Locking or Crossing a Market. A member other than an Eligible Market-Maker that creates a Locked Market or a Crossed Market shall unlock (uncross) the market.

Rule 6.85. Limitation on Principal Order Access

A Market-Maker shall not be permitted to send Principal Orders in an Eligible Option Class through the Linkage for a given calendar quarter if the Market-Maker effected less than 80 percent of its volume in that Eligible Option Class on the Exchange in the previous calendar quarter (that is, the Market-Maker effected 20 percent or more of its volume by sending Principal Orders through the Linkage) as calculated by the Exchange. This ''80/20'' is represented as follows:

$$\frac{X}{X+Y}$$

''X'' equals the total contract volume the Market-Maker effects in an Eligible Option Class against orders of Customs on the Exchange during a calendar quarter (a) including contract volume effected by executing P/A Orders sent to the Exchange through the Linkage, but (b) excluding contract volume effected by sending P/A Orders through the Linkage for execution on another Participant Exchange. ''Y'' equals the total contract volume the Market-Maker effects in such Eligible Option Class by sending Principal Orders through the Linkage during that calendar quarter.

II. Self-Regulatory Organization's Statement of the Purpose of, and Statutory Basis for, the Proposed Rule Change

In its filing with the Commission, the CBOE included statements concerning the purpose of, and basis for, the proposed rule change and discussed any comments it received on the proposed rule change. The text of these statements may be examined at the places specified in Item IV below. The CBOE has prepared summaries, set forth in Sections A, B, and C below, of the most significant aspects of such statements.

A. Self-Regulatory Organization's Statement of the Purpose of, and Statutory Basis for, the Proposed Rule Change

1. Purpose

On July 28, 2000, the Commission approved a national market system plan for the purpose of creating and operating an intermarket options linkage (''Linkage Plan'').[3] The Linkage Plan requires Linkage Plan participants to adopt uniform rules with respect to trade-throughs, locked/crossed markets, and limitations on Principal Order

[3] *See* Securities Exchange Act Release No. 43086 (July 28, 2000), 65 FR 48023 (August 4, 2000).

access.[4] In August, 2001, CBOE submitted a rule filing proposing to adopt such rules (SR–CBOE–2001–46). Because the Linkage Plan has been amended several times since that filing was submitted,[5] this filing replaces the filing. Accordingly, the purpose of this proposed rule change is to adopt those rules in new Section E under CBOE Chapter VI.

Trade-Throughs. Section 8(c) of the Linkage Plan requires the Linkage Plan participants to submit uniform rules governing trade-throughs that contain the various trade-through provisions detailed in the Linkage Plan. On June 27, 2001, the Commission approved an amendment to the Linkage Plan adding, in part, provisions to the trade-through section of the Linkage Plan, including provisions on trade-through surveillance and disciplinary action for trade-throughs of other Linkage Plan participants.[6] Accordingly, the Exchange represents that the proposed rules contain the trade-through provisions of the Linkage Plan. Additionally, and reluctantly, the proposed rule contain a provision allowing for disciplinary action against exchange members for trade-throughs of exchanges that are not participants in the intermarket linkage.

Proposed CBOE Rule 6.83 incorporate the various aspects of the Linkage Plan's trade-through provisions including provisions concerning avoidance and satisfaction of trade-throughs, exceptions of trade-through liability, responsibilities and rights following trade-through complaints, and limitations on trade-throughs (including the aforementioned provision prohibiting members from trading through any exchange's bid/offer, under certain circumstances).

Locked and Crossed Markets. Section 7(c) of the Linkage Plan requires the Linkage Plan participants to submit uniform rules providing that (1) an Eligible Market Maker that creates a locked market or a crossed market must unlock (uncross) that market or must direct a Principal Order through the linkage to trade against the bid or offer that the Eligible Market Maker locked (crossed); and (2) a member other than an Eligible Market Maker that creates a locked market or a crossed market must unlock (uncross) the market. Proposed CBOE Rule 6.84 contains these provisions.

Limitation on Principal Order Access. Section 8(b)(iii) of the Linkage Plan requires the Linkage Plan participants to adopt uniform rules providing for an ''80/20 Test.'' That test provides generally that a market shall not be permitted to send Principal Orders in an Eligible Option Class through the linkage for a given calendar quarter if the market maker effected less than 80 percent of its volume in that Eligible Option Class on the Exchange in the previous calendar quarter (that is, the market maker effect 20 percent or more of its volume by sending Principal Orders through the Linkage). Proposed CBOE Rule 6.85 contains the ''80/20 Test.''

Other Rules. CBOE also proposes to adopt CBOE Rules 6.80 and 6.81. Proposed CBOE Rule 6.80 merely provides definitions for terms used throughout proposed Section E. The Exchange represents that these definitions are consistent with the definitions contained in the Linkage Plan. Proposed CBOE Rule 6.81 describes the operation of the linkage and is meant to assist members in understanding their obligations under the Linkage Plan. The Exchange represents that it is entirely consistent with the Linkage Plan.

It should be noted that the proposed rules will become effective as the Exchange implements the operation of the applicable provisions of the linkage. This will be done pursuant to the linkage phase-in process described in the Linkage Plan.

2. Statutory Basis

The Exchange believes that the proposes rule change meets the requirement of Section 6(b)(5) under the Exchange Act[7] in that it is designed to prevent fraudulent and manipulative acts and practices, to promote just and equitable principles of trade, to foster cooperation and coordination with persons engaged in regulating, clearing, settling, and processing information with respect to, and facilitating transaction in securities, to remove impediments to and perfect the mechanism for a free and open market and a national market system, and, in general, to protect investors and the public interest.

B. Self-Regulatory Organizations's Statement on Burden on Competition

The Exchange believes that the proposed rule change does not impose any burden on competition that is not necessary or appropriate in furtherance of the purposes of the Exchange Act.

C. Self-Regulatory Organization's Statement on Comments on the Proposed Rule Change Received from Members, Participants or Others

No written comments were solicited or received with respect to the proposed rule change.

III. Date of Effectiveness of the Proposed Rule Change and Timing for Commission Action

Within 35 days of the date of publication of this notice in the **Federal Register** or within such longer period (i) as the Commission may designate up to 90 days of such date if it finds such longer period to be appropriate and publishes its reasons for so finding or (ii) as to which the CBOE consents, the Commission will:

(A). by order approve such proposed rule change; or

(B). institute proceedings to determine whether the proposed rule change should be disapproved.

IV. Solicitation of Comments

Interested persons are invited to submit written data, views and arguments concerning the foregoing, including whether the proposed rule change is consistent with the Exchange Act. Persons making written submissions should file six copies thereof with the Secretary, Securities and Exchange Commission, 450 Fifth Street, NW., Washington, DC 20549–0609. Copies of the submission, all subsequent amendments, all written statements with respect to the proposed rule change that are filed with the Commission, and all written communications relating to the proposed rule change between the Commission and any person, other than those that may be withheld from the public in accordance with the provisions of 5 U.S.C. 552, will be available for inspection and copying in the Commission's Public Reference Room. Copies of such filing will also be available for inspection and copying at the principal office of the CBOE. All submissions should refer to File No. SR–CBOE–2002–61 and should be submitted by January 17, 2003.

[4] A ''Principal Order'' is defined in the Plan as ''an order for the principal account of an Eligible Market Maker'' and is not a Principal Acting as Agent Order. An ''Eligible Marker Maker'' is, for CBOE purposes, a market maker that: (1) Is assigned to, and is providing two-sided quotations in, the Eligible Option Class; (2) is logged on to participate in CBOE's auto-ex system in such Eligible Option Class; and (3) is in compliance with the requirements of the proposed CBOE Rule 6.85 which is discussed further in the proposed rule filing.

[5] On June 27, 2001 and May 30, 2002, respectively, the Commission approved amendments to the Linkage Plan. *See* Securities Exchange Act Release Nos. 44482 (June 27, 2001), 66 FR 35470 (July 5, 2001) and 46001 (May 30, 2002), 67 FR 38687 (June 5, 2002).

[6] *See* Securities Exchange Act Release No. 44482 (June 27, 2001), 66 FR 35470 (July 5, 2001).

[7] 15 U.S.C. 78f(b)(5).

For the Commission, by the Division of Market Regulation, pursuant to delegated authority.[8]

J. Lynn Taylor,

Assistant Secretary.

[FR Doc. 02–32638 Filed 12–26–02; 8:45 am]

BILLING CODE 8010–01–M

SECURITIES AND EXCHANGE COMMISSION

[Release No. 34–46467A]

Self-Regulatory Organizations; Approval of Chicago Board Options Exchange, Inc. Fingerprinting Plan

December 19, 2002.

Correction

In Release No. 34–46467 (''Prior Release''), issued on September 6, 2002, beginning on page 58088 in the **Federal Register** issue of Friday, September 13, 2002, the amended fingerprinting plan of the Chicago Board Options Exchange, Inc. (''CBOE'') was noticed incorrectly. The corrected text of the amended CBOE fingerprinting plan appears below. Additions are in italics and deletions are in brackets as compared to the plan text that appeared in the Prior Release.

Chicago Board Options Exchange, Incorporated Fingerprint Plan

Chicago Board Options Exchange, Incorporated (''Exchange'') submits this Fingerprint Plan (''Plan'') pursuant to Rule 17f2(c) under the Securities Exchange Act of 1934, as amended (''Act''). This Plan supersedes and replaces the Exchange's Fingerprint Plan approved by the Securities and Exchange Commission (''Commission'') on January 27, 1984.

The purpose of this Plan is to enable Exchange members and Exchange member applicants to comply with Section 17(f)(2) of the Act and Rule 17f2 thereunder by providing a facility for the fingerprints of individual partners, directors, officers, and employees of Exchange members and Exchange member applicants to be processed and submitted to the Attorney General of the United States or its designee (''Attorney General'').

The Exchange will utilize a Live-Scan electronic system for the taking of fingerprints. Any Live-Scan system utilized by the Exchange will have been certified by the Federal Bureau of Investigation (''FBI'') for compliance with the FBI's Integrated Automated Fingerprint Identification System Image Quality Specifications. The Exchange will train the Exchange personnel responsible for operating the Live-Scan system. The Exchange may also manually take fingerprints and receive manually taken fingerprint cards. The purpose of allowing this flexibility is to permit the Exchange to retain the ability to process and submit fingerprints to the Attorney General in the event the Exchange's Live-Scan system is not able to be used due to, for example, a system problem. Additionally, this flexibility will permit the Exchange to continue to receive manually taken fingerprint cards from those who are located at a distance from the Exchange or who for other reasons find it more expedient to provide manually taken fingerprint cards to the Exchange rather than travel to the Exchange to have fingerprints taken.

Accordingly, under the Plan, the Exchange may receive fingerprints through any of the following methods:

1. The Exchange may utilize a Live-Scan system to take the fingerprints and create an electronic fingerprint record for the fingerprints;

2. the Exchange may manually take the fingerprints on a paper fingerprint card; [or]

3. the Exchange may receive manually taken paper fingerprint cards;

4. the Exchange may receive paper copies of electronic fingerprint records created by an FBI certified Live-Scan system that is utilized by a third party; or

5. the Exchange may electronically receive from a remote location electronic fingerprint records created by an FBI certified Live-Scan system that is utilized by a third party.

If the Exchange electronically receives an electronic fingerprint record created by an FBI certified Live-Scan system that is utilized by a third party, the Exchange will take reasonable measures to receive the transmission in an electronically secure manner.

The fingerprint cards and electronic fingerprint records will identify the individual providing the fingerprints and the Exchange member or Exchange member applicant with whom the individual is associated. The fingerprint cards and electronic fingerprint records will be in a form acceptable to the Attorney General and the Exchange.

In the event that an individual who previously provided fingerprints to the Exchange in accordance with this Plan is required to re-submit fingerprints, the Exchange may permit the individual not to be re-fingerprinted if the following conditions are satisfied:

1. The Exchange is in possession of an electronic record of that individual's fingerprints taken by a Live-Scan system;

2. the existing electronic fingerprint record was previously submitted to, and deemed acceptable by, the Attorney General; and

3. the Exchange is able to resubmit the existing electronic fingerprint record to the Attorney General.

In such an event, the Exchange shall re-submit the existing electronic fingerprint record to the Attorney General and process the fingerprint record received back from the Attorney General with respect to the fingerprints in the same manner as is the case with respect to initially submitted fingerprints.

Once fingerprints are taken, the Exchange will review the information on the fingerprint card or in the electronic fingerprint record for the fingerprints, as applicable, for completeness, but not for accuracy, and will then submit the completed fingerprint card or electronic fingerprint record, as applicable, to the Attorney General for identification and processing.

The Exchange shall submit fingerprint cards and electronic fingerprint records to the Attorney General in accordance with any requirements of the Attorney General relating to the manner of submission of this information. The submission may occur through any of the following methods:

1. The Exchange may electronically transmit to the Attorney General an electronic fingerprint record created by a Live-Scan system;

2. the Exchange may print out an electronic fingerprint record created by a Live-Scan system onto a paper fingerprint card (or receive a paper copy of an electronic fingerprint record created by an FBI certified Live-Scan system that is utilized by a third party) and submit the paper fingerprint card to the Attorney General through manual transmission, such as by United States mail; or

3. the Exchange may submit manually taken fingerprint cards to the Attorney General through manual transmission, such as by United States mail.

The purpose of allowing this flexibility is to permit the Exchange to retain the ability to submit fingerprints to the Attorney General in the event the Exchange is unable to electronically transmit electronic fingerprint records to the Attorney General due to a telecommunication problem or otherwise. Additionally, this flexibility will permit the Exchange to manually transmit to the Attorney General fingerprint cards manually taken by the Exchange and received from Exchange

[8] 17 CFR 200.30–3(a)(12).

members and Exchange member applicants.

The Exchange will keep a list of the fingerprint cards and electronic fingerprint records submitted to the Attorney General in order to check on fingerprint submissions to the Attorney General pursuant to this Plan for which no fingerprint report has yet been received from the Attorney General. When a fingerprint report is received by the Exchange from the Attorney General with respect to fingerprints submitted by the Exchange pursuant to this Plan, the Exchange promptly will manually (such as by United States mail) or electronically forward a copy of the fingerprint report to the appropriate Exchange member or Exchange member applicant. If the Exchange electronically forwards a copy of a fingerprint report to an Exchange member or Exchange member applicant, the Exchange will take reasonable measures to transmit the report in an electronically secure manner.

The Exchange promptly will review all fingerprint reports received from the Attorney General with respect to fingerprints submitted by the Exchange pursuant to this Plan in order to determine whether they contain information involving:

1. A statutory disqualification, as that term is defined in the Act; or
2. material misstatements or omissions concerning information previously reported to the Exchange.

If so, the Exchange promptly will take appropriate action concerning eligibility or continued eligibility for Exchange membership or for employment or association with an Exchange member.

Copies of fingerprint reports received from the Attorney General with respect to fingerprints submitted by the Exchange pursuant to this Plan will be maintained by the Exchange in accordance with the Exchange's Record Retention/Destruction/Conversion Plan filed with the Commission. Any maintenance of fingerprint records by the Exchange shall be for the Exchange's own administrative purposes, and the Exchange is not undertaking to maintain fingerprint records on behalf of Exchange members pursuant to Rule 17f–2(d)(2).

The above procedures will be modified in the following manner with respect to individuals in registration capacities recognized by the Exchange who are associated persons of Exchange members that are not members of the NASD. The Exchange has established an arrangement with NASD to permit these individuals to be electronically registered with the Exchange through the Web Central Registration Depository (''Web CRD''). In connection with this registration process, these registered persons will have their fingerprints processed and submitted to the Attorney General through the facilities of either NASD or the Exchange. The extent to which these registered persons may utilize either one or both of these facilities will be determined by the Exchange and NASD. Fingerprint reports for these registered persons that are generated by the Attorney General will be provided to Web CRD and will be provided to the members with which these registered persons are associated through Web CRD. Record-keeping with respect to fingerprint submissions to and fingerprint reports from the Attorney General for these registered persons will be maintained by NASD. NASD will notify the Exchange if a fingerprint report received by Web CRD for one of these registered persons contains information relating to an arrest or conviction. In such an instance, the Exchange will review the fingerprint report and take appropriate action, if necessary, concerning eligibility or continued eligibility of the individual for employment or association with an Exchange member.

The Exchange will advise Exchange members and Exchange member applicants of the availability of its fingerprint services and any fees charged by the Exchange in connection with those services and the processing of fingerprints pursuant to this Plan. The Exchange shall file any such fees with the Commission pursuant to Section 19(b)(3)(A) of the Act.

The Exchange shall not be liable for losses or damages of any kind in connection with its fingerprinting services, as a result of its failure to follow, or properly to follow, the procedures described above, or as a result of lost or delayed fingerprint cards, electronic fingerprint records, or fingerprint reports, or as a result of any action by the Exchange or the Exchange's failure to take action in connection with this Plan.

For the Commission, by the Division of Market Regulation, pursuant to delegated authority.[1]

J. Lynn Taylor,

Assistant Secretary.

[FR Doc. 02–32639 Filed 12–26–02; 8:45 am]

BILLING CODE 8010–01–P

[1] 17 CFR 200.30–3(a)(17)(iii).

SECURITIES AND EXCHANGE COMMISSION

[Release No. 34–47032; File No. SR–CBOE–2002–68]

Self-Regulatory Organizations; Notice of Filing and Immediate Effectiveness of a Proposed Rule Change by the Chicago Board Options Exchange, Incorporated Relating to the Extension of an Access Fee for Non-Customer RAES Orders

December 18, 2002.

Pursuant to Section 19(b)(1) of the Securities Exchange Act of 1934 (''Act'')[1] and Rule 19b–4 thereunder,[2] notice is hereby given that on November 20, 2002, the Chicago Board Options Exchange (''CBOE'' or ''Exchange'') filed with the Securities and Exchange Commission (''Commission'') the proposed rule change as described in Items I, II, and III below, which Items have been prepared by the CBOE. The Commission is publishing this notice to solicit comments on the proposed rule change from interested persons.

I. Self-Regulatory Organization's Statement of the Terms of Substance of the Proposed Rule Change

The CBOE proposes to make a change to its Fee Schedule to extend the applicability of an access fee for non-customer RAES orders. Below is the text of the proposed rule change. Proposed new text is italicized, and proposed deleted text is bracketed.

* * * * *

FEE SCHEDULE

NOVEMBER 1, 2002

4. RAES (RETAIL AUTOMATIC EXECUTION SYSTEM) (1)(4): Per Contract

Assessed to Non-Customer Transactions *(all RAES transactions with origin codes other than ''C'')*[In MNX, NDQ, QQQ and XEO] * * * $.30

* * * * *

(1) Per contract side, including FLEX options. Transaction and Trade Match Fees are applicable to the CBOEdirect system.

* * * * *

(4) Transaction, trade match and RAES fees are charged to the CBOE executing firm on the input record.

* * * * *

[1] 15 U.S.C. 78s(b)(1).

[2] 17 CFR 240.19b–4.

II. Self-Regulatory Organization's Statement of the Purpose of, and Statutory Basis for, the Proposed Rule Change

In its filing with the Commission, the CBOE included statements concerning the purpose of and basis for the proposed rule change and discussed any comments it received on the proposed rule change. The text of these statements may be examined at the places specified in Item IV below. The CBOE has prepared summaries, set forth in Sections A, B, and C below, of the most significant aspects of such statements.

A. Self-Regulatory Organization's Statement of the Purpose of, and Statutory Basis for, the Proposed Rule Change

1. Purpose

The CBOE is proposing to extend a $.30 per contract Access Fee to all non-customer transactions (defined as all transactions with origin codes other than ''C'')[3] in option classes that are executed by means of the CBOE's Retail Automatic Execution System (''RAES'').[4] Under this proposal, all non-customer RAES transactions would be uniformly assessed this fee. The CBOE also notes that this fee would only be charged to Exchange member firms, through the customary monthly billing that occurs shortly after the close of each trading month. The fee would not be charged to non-members of the Exchange.

This proposal is related to the fact that the CBOE has begun to permit certain broker-dealer orders to be executed on RAES for equity option classes.[5] Having thus extended the benefits of rapid, automatic execution to such non-customer orders, the Exchange seeks to impose this fee to help allocate to such orders a fair share of the related costs of running the RAES and related Exchange systems. The CBOE notes in this regard that most index customer orders are already assessed a RAES fee of $.25 per contract.[6] In addition, as noted earlier, the CBOE has already adopted the Access Fee for non-customer RAES transactions in the QQQ, NDX, MNX, and XEO option classes.[7]

Under this proposal, the Access Fee would continue to apply to non-customer RAES options transactions in QQQ, NDX, MNX, and XEO and would be extended to non-customer RAES transactions in equity options, as well as other option classes when non-customer orders in those classes become eligible for execution via RAES.

The CBOE believes that this fee would help better equalize RAES fees between customer and non-customer RAES orders. The CBOE also notes that this proposal, like SR–CBOE–2002–42, is modeled on a filing by the Pacific Exchange, Inc., which adopted a $.45 per contract surcharge fee for all broker-dealer orders executed via its automatic execution system.[8]

2. Statutory Basis

The CBOE believes the proposed rule change is consistent with Section 6(b) of the Act[9] in general, and furthers the objectives of Section 6(b)(4)[10] in particular, in that it is designed to provide for the equitable allocation of reasonable dues, fees, and other changes among CBOE members.

B. Self-Regulatory Organization's Statement on Burden on Competition

The Exchange does not believe that the proposed rule change will impose any burden on competition not necessary or appropriate in furtherance of the purposes of the Act.

C. Self-Regulatory Organization's Statement on Comments on the Proposed Rule Change Received From Members, Participants, or Others

No written comments were solicited or received with respect to the proposed rule change.

III. Date of Effectiveness of the Proposed Rule Change and Timing for Commission Action

The proposed rule change has become effective pursuant to Section 19(b)(3)(A)(ii) of the Act[11] and subparagraph (f)(2) of Rule 19b–4 thereunder[12] because it establishes or changes a due, fee, or other charge imposed by the Exchange. At any time within 60 days of the filing of the proposed rule change, the Commission may summarily abrogate such rule change if it appears to the Commission that such action is necessary or appropriate in the public interest, for the protection of investors, or otherwise in furtherance of the purposes of the Act.

IV. Solicitation of Comments

Interested persons are invited to submit written data, views, and arguments concerning the foregoing, including whether the proposed rule change, as amended, is consistent with the Act. Persons making written submissions should file six copies thereof with the Secretary, Securities and Exchange Commission, 450 Fifth Street, NW., Washington, DC 20549–0609. Copies of the submission, all subsequent amendments, all written statements with respect to the proposed rule change that are filed with the Commission, and all written communications relating to the proposed rule change between the Commission and any person, other than those that may be withheld from the public in accordance with the provisions of 5 U.S.C. 552, will be available for inspection and copying in the Commission's Public Reference Room. Copies of such filing also will be available for inspection and copying at the principal office of the CBOE. All submissions should refer to File No. SR–CBOE–2002–68 and should be submitted by January 17, 2003.

For the Commission, by the Division of Market Regulation, pursuant to delegated authority.[13]

J. Lynn Taylor,

Assistant Secretary.

[FR Doc. 02–32732 Filed 12–26–02; 8:45 am]

BILLING CODE 8010–01–P

[3] Every order entering the CBOE Order Routing System is assigned an origin code to reflect the category (though not the specific identity) of the source of each order: ''C'' for public customers, ''B'' for Broker-Dealers, ''F'' for proprietary accounts of member firms of the Options Clearing Corporation, ''M'' for CBOE market-makers, ''N'' for non-CBOE market-makers, and ''Y'' for specialists in an underlying security. The CBOE adopted a related order identification rule for market-maker and specialist orders. *See* Securities Exchange Act Release No. 46102 (June 21, 2002), 67 FR 43692 (June 28, 2002) (SR–CBOE–2002–33).

[4] The CBOE applies the $.30 per contract Access Fee for non-customer RAES orders in options on the Nasdaq 100® Index Tracking Stock (''QQQ''), Nasdaq-100® Index Options (NDX), CBOE Mini-NDX Index Options (''MNX℠''), and European style S&P 100® Index options (''XEO®'') classes. *See* Securities Exchange Act Release No. 46455 (September 3, 2002), 67 FR 57468 (September 10, 2002) (SR–CBOE–2002–42).

[5] *See* Securities Exchange Act Release No. 46598 (October 3, 2002), 67 FR 63478 (October 11, 2002) (SR–CBOE–2002–56).

[6] QQQ customer orders are currently exempt from the RAES fee, and DJX RAES customer orders are only assessed the fee on the first 25 contracts.

[7] *See supra* note 4.

[8] *See* Securities Exchange Act Release No. 45662 (March 27, 2002), 67 FR 16786 (April 8, 2002) (SR–PCX–2002–10).

[9] 15 U.S.C. 78f(b)

[10] 15 U.S.C. 78f(b)(4).

[11] 15 U.S.C. 78s(b)(3)(A)(ii).

[12] 17 CFR 240.19b–4(f)(2).

[13] 17 CFR 200.30–3(a)(12).

SECURITIES AND EXCHANGE COMMISSION

[Release No. 34–47033; File No. SR–CBOE–2002–49]

Self-Regulatory Organizations; Notice of Filing of Proposed Rule Change by the Chicago Board Options Exchange, Inc. Relating to RAES Access Rules for Broad-Based Index Options and Options on Exchange-Traded Funds on Broad-Based Indexes

December 19, 2002.

Pursuant to Section 19(b)(1) of the Securities Exchange Act of 1934 (''Act''),[1] and Rule 19b–4 thereunder,[2] notice is hereby given that on November 1, 2002, the Chicago Board Options Exchange, Inc. (''CBOE'' or ''Exchange'') filed with the Securities and Exchange Commission (''Commission'') the proposed rule change as described in Items I, II, and III below, which Items have been prepared by CBOE. The Commission is publishing this notice to solicit comments on the proposed rule change from interested persons.

I. Self-Regulatory Organization's Statement of the Terms of Substance of the Proposed Rule Change

CBOE proposes to amend CBOE Rule 24.17 to broaden its applicability to options on broad-based indexes, including SPX, and options on exchange-traded funds (''ETFs'') on broad-based indexes, and make other related changes to Exchange rules. The text of the proposed rule change is available at the CBOE and at the Commission.

II. Self-Regulatory Organization's Statement of the Purpose of, and Statutory Basis for, the Proposed Rule Change

In its filing with the Commission, CBOE included statements concerning the purpose of, and basis for, the proposed rule change and discussed any comments it received on the proposed rule change. The text of these statements may be examined at the places specified in Item IV below. CBOE has prepared summaries, set forth in Sections A, B, and C below, of the most significant aspects of such statements.

A. Self-Regulatory Organization's Statement of the Purpose of, and Statutory Basis for, the Proposed Rule Change

1. Purpose

Currently, the eligibility of CBOE market-makers to participate in trades through the Retail Automatic Execution System (''RAES'') in option classes on broad-based indexes, including OEX and SPX, as well as option classes on ETFs[3] on broad-based indexes (collectively, ''index-related options'') is governed under three different Exchange rules. CBOE Rule 8.16 governs RAES eligibility for all options classes other than DJX, OEX, and SPX. CBOE Rule 24.17 addresses RAES eligibility for market-makers in OEX and DJX. Finally, RAES eligibility in the SPX is governed by CBOE Rule 24.16, which is separate yet functionally identical to CBOE Rule 24.17.[4]

This proposed rule change would clarify and simplify the treatment of index-related options under CBOE rules by broadening CBOE Rule 24.17 to apply to market-makers in index-related options. The Exchange believes that this change would render CBOE Rule 24.16 duplicative and unnecessary. Therefore, the Exchange proposes to delete the current text of CBOE Rule 24.16, while reserving the rule number for possible future use.

In addition, CBOE seeks to amend the title of CBOE Rule 8.16 and certain text in subsection (a) of that rule to clarify that RAES eligibility under CBOE Rule 8.16 would apply only to option classes *other than* broad-based indexes and options on ETFs on broad-based indexes.

CBOE believes the consolidation of Exchange RAES eligibility rules for index-related options under one rule, 24.17, would provide consistent RAES eligibility treatment for market-makers in the various index-related options. In addition, the Exchange believes that CBOE Rule 24.17 is better suited to govern trading in index-related options than CBOE Rule 8.16, because index-related options more frequently tend to be traded in larger crowds, where more than one market-maker from a particular trading organization can often be present. CBOE believes that the current language of CBOE Rule 24.17 better anticipates and provides for this circumstance than does CBOE Rule 8.16, by setting forth more detailed criteria for when and how market-makers can participate in RAES as joint account members and/or as nominees of member organizations.[5]

CBOE proposes to add to CBOE Rule 24.17 one set of provisions already present in the current CBOE Rule 8.16 in order to increase and make more consistent the enforcement of market-maker obligations in index-related options. These provisions currently exist as CBOE Rule 8.16(a)(iii) and the related Interpretations and Policies .01–.02. CBOE proposes to add the provisions to CBOE Rule 24.17(b)(vii) and Interpretations and Policies .03–.04, thereunder. These provisions would authorize the appropriate Market Performance Committee to establish and enforce maximum percentages of transaction and contract volume that market-makers can execute through RAES transactions. The Committee would establish such limitations to ensure that market-makers standing in an index-related option crowd live up to their obligations to improve, update, and honor competitive markets in their appointed option classes in person, as set forth in CBOE Rule 8.7(b)(i)–(iii),[6] and do not simply stand there for the purpose of accepting and scalping out of favorable RAES trades, as they sometimes can do under the current CBOE Rules 24.16 and 24.17. The Exchange believes that this change would thereby further improve the competition and liquidity in CBOE index-related options markets. The Exchange notes that the provisions it is proposing to add to CBOE Rule 24.17 are substantially the same provisions that the Commission has previously approved for CBOE Rule 8.16.[7]

[1] 15 U.S.C. 78s(b)(1)

[2] 17 CFR 240.19b–4.

[3] For purposes of this rule, trust issued receipts or holding company depositary receipts (as defined in Interpretation .04 to CBOE Rule 1.1), as well as index portfolio receipts (as defined in Interpretation .02 to CBOE Rule 1.1) and index portfolio shares (as defined in Interpretation .03 to CBOE Rule 1.1), are all included within the meaning of the term ''exchange-traded fund.''

[4] While a few subsections of CBOE Rule 24.16 are phrased somewhat differently than their counterparts in CBOE Rule 24.17, they are interpreted and applied by the CBOE as being equivalent. *Compare* CBOE Rules 24.16(a)(ii), (c)(i), and (d)(i) with CBOE Rules 24.17(b)(ii), (c)(i), and (d)(i) (enabling market-makers to ''designate'' that their RAES trades be placed into an individual, joint, or nominee account in which the market-maker participates); *also compare* CBOE Rule 24.16(a)(iii) with CBOE Rule 24.17(b)(ii)–(iv) (establishing requirements for personally logging onto RAES and remaining in the trading crowd while logged in.)

[5] *Compare* CBOE Rule 24.17(c)–(d) with CBOE Rule 8.16(a)(ii).

[6] CBOE Rule 8.7(b) provides that market-makers are expected to perform the following activities in the course of maintaining a fair and orderly market in their appointed option classes:

(i) To compete with other market-makers to improve markets in all series of options classes at the station where a market-maker is present.

(ii) To make markets which, absent changed market conditions, will be honored to a reasonable number of contracts in all series of options classes at the station where a market-maker is present.

(iii) To update market quotations in response to changed market conditions in all series of options classes at the station where a market-maker is present.

[7] *See* Exchange Act Release No. 42870 (May 31, 2000), 65 FR 37191 (June 13, 2000) (SR–CBOE–97–37).

2. Statutory Basis

The Exchange believes the proposed rule change is consistent with the Act and the rules and regulations under the Act applicable to a national securities exchange and, in particular, the requirements of section 6(b) of the Act.[8] Specifically, the Exchange believes the proposed rule change is consistent with the requirements of Section 6(b)(5) of the Act[9] that the rules of an exchange be designed to promote just and equitable principles of trade, to prevent fraudulent and manipulative acts and, in general, to protect investors and the public interest. CBOE believes that the proposed rule change promotes just and equitable principles of trade and protects investors and the public interest because the RAES eligibility rules would be applied consistently for similar products involving broad-based indexes and options on ETFs on broad-based indexes. In addition, CBOE believes the amended CBOE Rule 24.17 would facilitate greater enforcement of market-maker obligations to improve, update, and honor competitive markets in index-related option classes.

B. Self-Regulatory Organization's Statement on Burden on Competition

CBOE does not believe that the proposed rule change would result in any burden on competition that is not necessary or appropriate in furtherance of the purposes of the Act.

C. Self-Regulatory Organization's Statement on Comments on the Proposed Rule Change Received From Members, Participants, or Others

Written comments were neither solicited nor received.

III. Date of Effectiveness of the Proposed Rule Change and Timing for Commission Action

Within 35 days of the date of publication of this notice in the **Federal Register** or within such longer period (i) as the Commission may designate up to 90 days of such date if it finds such longer period to be appropriate and publishes its reasons for so finding, or (ii) as to which the CBOE consents, the Commission will:

(A) By order approve such proposed rule change; or

(B) Institute proceedings to determine whether the proposed rule change should be disapproved.

IV. Solicitation of Comments

Interested persons are invited to submit written data, views, and arguments concerning the foregoing, including whether the proposed rule change is consistent with the Act. Persons making written submissions should file six copies thereof with the Secretary, Securities and Exchange Commission, 450 Fifth Street, NW., Washington, DC 20549–0609. Copies of the submission, all subsequent amendments, all written statements with respect to the proposed rule change that are filed with the Commission, and all written communications relating to the proposed rule change between the Commission and any person, other than those that may be withheld from the public in accordance with the provisions of 5 U.S.C. 552, will be available for inspection and copying in the Commission's Public Reference Room. Copies of such filings will also be available for inspection and copying at the principal office of CBOE. All submissions should refer to File No. SR–CBOE–2002–49 and should be submitted by January 17, 2003.

For the Commission, by the Division of Market Regulation, pursuant to delegated authority.[10]

J. Lynn Taylor,

Assistant Secretary.

[FR Doc. 02–32737 Filed 12–26–02; 8:45 am]

BILLING CODE 8010–01–P

[8] 15 U.S.C. 78(f)(b).

[9] 15 U.S.C. 78(f)(b)(5).

[10] 17 CFR 200.30–3(a)(12).

SECURITIES AND EXCHANGE COMMISSION

[Release No. 34–47034; File No. SR–CBOE–2002–70]

Self-Regulatory Organizations; Notice of Filing and Immediate Effectiveness of Proposed Rule Change by the Chicago Board Options Exchange, Inc. Relating to Day Trading Margin Requirements

December 19, 2002.

Pursuant to Section 19(b)(1) of the Securities Exchange Act of 1934 (''Act''),[1] and Rule 19b–4 thereunder,[2] notice is hereby given that on December 9, 2002, the Chicago Board Options Exchange, Inc. (''CBOE'' or ''Exchange'') submitted to the Securities and Exchange Commission (''Commission'') the proposed rule change as described in Items I and II below, which Items have been prepared by the Exchange. The Exchange submitted the proposed rule change pursuant to section 19(b)(3)(A) of the Act,[3] and Rule 19b–4(f)(6) thereunder,[4] which renders the proposed rule change effective upon filing with the Commission. The Commission is publishing this notice to solicit comments on the proposed rule change from interested persons.

I. Self-Regulatory Organization's Statement of the Terms of Substance of the Proposed Rule Change

The Exchange proposes to amend Chapter 12 of its rules (''Margins'') to implement specific requirements for day trading in customer accounts of member organizations. The text of the proposed rule change follows. New rule language is italicized.

CHAPTER 12: Margins

Rules 12.1 and 12.2: No change.

Rule 12.3

(a) through (i)(3): No change.

(i)(4) equity of at least $2,000 except that cash need not be deposited in excess of the cost of any security purchased (this equity and cost of purchase provision shall not apply to ''when distributed'' securities in a cash account). *The minimum equity requirement for a ''pattern day trader'' is $25,000 pursuant to Rule 12.3(j)(4).*

Withdrawals of cash or securities may be made from any account which has a debit balance, ''short'' position or commitments, provided the account is in compliance with Regulation T of the Board of Governors of the Federal Reserve System and after such withdrawal the equity in the account is at least the greater of $2,000 (*$25,000 in the case of ''pattern day traders''*) or an amount sufficient to meet the maintenance margin requirements of this Rule.

Day Trading

(j)(1) The term ''day trading'' means the purchasing and selling, or the selling and purchasing, of the same security on the same day in a margin account except for:

(A) a long security position held overnight and sold the next day prior to any new purchases of the same security, or

(B) a short security position held overnight and purchased the next day prior to any new sales of the same security.

(2) The term ''pattern day trader'' means any customer who executes four (4) or more day trades within five (5) business days. However, if the number of day trades is 6% or less of total trades for the five (5) business day period, the customer will no longer be considered a

[1] 15 U.S.C. 78s(b)(1).

[2] 17 CFR 240.19b–4.

[3] 15 U.S.C. 78s(b)(3)(A).

[4] 17 CFR 240.19b–4(f)(6).

pattern day trader and the special requirements under paragraph 12.3(j)(4) of this Rule will not apply.

(3) The term ''day trading buying power'' means the equity in a customer's account at the close of business of the previous day, less any maintenance margin requirement as prescribed in paragraph (b) of this Rule, multiplied by four (4), for equity securities.

Whenever day trading occurs in a customer's margin account, the special maintenance margin required for the day trades in equity securities shall be 25% of the cost of all the day trades made during the day. For non-equity securities, the special maintenance margin shall be as required pursuant to the other provisions of this Rule. Alternatively, when two or more day trades occur on the same day in the same customer's account, the margin required may be computed utilizing the highest (dollar amount) open position during that day. To utilize the highest open position computation method, a record showing the ''time and tick'' of each trade must be maintained to document the sequence in which each day trade was completed.

(4) Special Requirements for Pattern Day Traders.

(A) Minimum Equity Requirement for Pattern Day Traders. The minimum equity required for the accounts of customers deemed to be pattern day traders shall be $25,000. This minimum equity must be maintained in the customer's account at all times (see Interpretations and Policies .16 and .17 of this Rule).

(B) Pattern day traders cannot trade in excess of their day trading buying power as defined in paragraph (j)(3) above. In the event a pattern day trader exceeds its day trading buying power, which creates a special maintenance margin deficiency, the following actions will be taken by the member organization:

(1) The account will be margined based on the cost of all the day trades made during the day, and

(2) The customer's day trading buying power will be limited to the equity in the customer's account at the close of business of the previous day, less the maintenance margin required in paragraph (b) of this Rule, multiplied by two, for equity securities.

(C) Pattern day traders who fail to meet their special maintenance margin calls as required within five (5) business days from the date the margin deficiency occurs will be permitted to execute transactions only on a cash available basis for 90 days or until the special maintenance margin call is met.

(D) Pattern day traders are restricted from utilizing the guaranteed account provision under Rule 12.8 for meeting the requirements of this Rule 12.3(j).

(E) Funds, deposited into a pattern day trader's account to meet the minimum equity or maintenance margin requirements of this Rule 12.3(j), cannot be withdrawn for a minimum of two (2) business days following the close of business on the day of deposit.

(5) When the equity in a customer's account, after giving consideration to the other provisions of this Rule, is not sufficient to meet the requirements of Rule 12.3(j), additional cash or securities must be received into the account to meet any deficiency within five (5) business days of the trade date.

In addition, on the sixth business day only, member organizations are required to deduct from net capital the amount of unmet maintenance margin calls pursuant to SEC Rule 15c3–1.

Interpretations and Policies:

.16 In the event that the member organization at which a customer seeks to open an account, or resume day trading in an existing account, knows or has a reasonable basis to believe that the customer will engage in pattern day trading, then the minimum equity required under Rule 12.3(j)(4)(A) must be deposited in the account prior to commencement of day trading.

.17 When a customer engages in pattern day trading, the minimum equity required under Rule 12.3(j)(4)(A) must be deposited in the account before such customer may continue day trading.

.18 For purposes of Rule 12.3(j)(3), ''time and tick'' (i.e., calculating margin utilizing each trade in the sequence that it is executed, using the highest open position during the day) may not be used for a pattern day trader who exceeds their day trading buying power.

.19 For purposes of Rules 12.3(j)(3) and 12.3(j)(4)(B)(2) above, the day trading buying power for non-equity securities shall, at a minimum, be computed using the applicable maintenance margin requirements pursuant to Rule 12.3.

II. Self-Regulatory Organization's Statement of the Purpose of, and Statutory Basis for, the Proposed Rule Change

In its filing with the Commission, the Exchange included statements concerning the purpose of and basis for the proposed rule change and discussed any comments it received on the proposed rule change. The text of these statements may be examined at the places specified in Item IV below. The Exchange has prepared summaries, set forth in Sections A, B, and C below, of the most significant aspects of such statements.

A. Self-Regulatory Organization's Statement of the Purpose of, and Statutory Basis for, the Proposed Rule Change

1. Purpose

The CBOE proposes to implement specific margin requirements for day trading in Chapter 12 of its rules (''Margins''). These requirements would be incorporated into Rule 12.3 under new paragraph (j). The CBOE is essentially adopting the requirements contained in a New York Stock Exchange (''NYSE'') rule filing approved by the Commission. The Commission simultaneously approved fundamentally comparable rules filed by the National Association of Securities Dealers.[5]

Day trading is the purchasing and selling (or the selling and purchasing) of the same security on the same day in a margin account. Day traders attempt to profit from intra-day price movements of securities. Excessive day trading can pose significant credit risk to a broker-dealer.

The day trading of securities by customers of broker-dealers has increased greatly in recent years. The rise in the popularity of day trading is due in large part to the proliferation of on-line trading and broker-dealers that specialize in providing instruction on, and accommodating, day trading. Day trading has also become a more attractive endeavor because of the ever increasing speed at which orders can be routed and executed. Given the general increase in day trade activity and the new day trading requirements of the NYSE and NASD, the CBOE believes it prudent to implement day trading requirements at this time.

When an investor purchases a security on margin, the investor pays for part of the purchase cost (*i.e.*, the margin requirement) and the broker-dealer loans the investor the amount needed to pay for the balance. The use of margin increases both the potential return and financial risk to the investor. This is because margin enables an investor to purchase more of the security with a given amount of funds than the investor could purchase on a strictly cash basis.

Pursuant to Section 7(a) of the Act,[6] the Board of Governors of the Federal

[5] *See* NYSE Rule 431 and NASD Rule 2520; Securities Exchange Act Release No. 34–44009 (February 27, 2001); 66 FR 13608 (March 6, 2001) (order approving File Nos. SR–NYSE–99–47 and SR–NASD–00–03).

[6] 15 U.S.C. 78g(a).

Reserve System (the ''Federal Reserve'') is vested with the authority to regulate the extension of credit by broker-dealers on customers' securities transactions. In order to prevent the excessive use of credit for the purchase or carrying of securities as intended by Section 7(a), the Federal Reserve instituted Regulation T.[7] Regulation T contains initial margin requirements only, and allows all trades executed during a day to be netted in order to determine if a margin deficiency exists at the end of the day. For a day trade, the margin currently required under Regulation T is any loss. Day traders, therefore, are not required under Regulation T to meet the initial margin requirement on a security position held for part of the day. However, the day trader, and the firm, has been exposed to intra-day risk. In actuality, day traders receive an extension of credit from their broker-dealers on an intra-day basis when they effect day trades, even though a day trade results in no open position at the end of the day.

The Exchange's current rules establish minimum levels of margin that must be maintained in customer accounts (*i.e.*, maintenance margin). These requirements only apply to the positions in an account at the end of the day and, like Regulation T, do not cover security positions held for only a fraction of a day. For options, the Exchange's margin rules also prescribe initial margin requirements as permitted by Regulation T, provided such rules have been approved by the Commission. Again, like Regulation T, these initial margin requirements do not cover positions that are opened and closed in an account before the end of the day.

The aim of this proposal is to deter excessive day trading by requiring day traders to deposit and maintain minimum levels of equity and margin to support their day trading activity. This is consistent with Regulation T in that Regulation T permits a registered securities exchange to impose additional requirements.[8] For uniformity, the Exchange is adopting essentially the same day trading requirements set forth in NYSE Rule 431 and NASD Rule 2520.

The elements of the day trading requirements proposed by the Exchange are summarized below.

Definitions

The proposed rule defines ''day trading'' as the purchasing and selling, or the selling and purchasing, of the same security on the same day in a margin account. An exception is provided for liquidations of positions held overnight that are followed by a transaction that restores the same position.

The designation ''pattern day trader'' refers to a customer that executes at least four (4) day trades within five (5) business days, provided the number of day trades represents more than 6% of total trades in the customer's account for the five day period. Thus, if the number of day trades is 6% or less of the total number of transactions, the customer need not be classified as a pattern day trader. The Exchange believes that this aspect of the proposal provides fairness because four day trades would be insignificant in proportion to a large number of transactions.

The term ''day trading buying power'' is established in order to allow day trading to be conducted up to a set maximum, beyond which a day trading margin call is incurred. It is defined as the equity in a customer's account at the close of business of the previous day less the total maintenance margin required multiplied by 4 for equity securities.

Requirement for Non-Pattern Day Traders

Customers will be required to have enough equity to meet the maintenance margin on all day trades. For equity securities, the maintenance margin would be 25% of the cost of all day trades. If the customer's account has insufficient equity to meet the maintenance margin, the customer will have five (5) business days to deposit the amount needed. If a deposit is not made, the member organization must take a one time capital charge on the sixth business day for any unmet deficiency.

Additional Requirements for Pattern Day Traders

A pattern day trader must have account equity of at least $25,000 at all times. If a member organization knows, or there is a reasonable basis for believing, that a new account will pattern day trade, or that an existing account will resume pattern day trading, the member organization must require that the $25,000 minimum equity be in the account prior to accepting any opening orders. A pattern day trader may not be allowed to continue day trading if account equity falls below $25,000. Additionally, a pattern day trader's account may not be guaranteed by another account for the day trading margin requirement. In prohibiting guarantees, each pattern day trader must demonstrate actual financial ability to engage in day trading, independently.

The day trading margin requirement for pattern day traders is the same as for non-pattern day traders (25% of the cost, or proceeds, for equity securities). Pattern day traders, however, incur a penalty if they exceed their day trading buying power. If they exceed their day trading buying power, two restrictions must be imposed until the deficiency is deposited or for five business days, whichever comes first. The restrictions are as follows:

1. All subsequent day trades must be margined based on the cost of all the day trades made during the day; and

2. The day trade margin requirement for equity securities must be increased from 25% to 50%. (For day trades involving purchases of options eligible for loan value, the day trade maintenance margin requirement must be increased from 75% to 100%.)

As with non-pattern day traders, pattern day traders must deposit any maintenance margin deficiency as a result of day trading within five (5) business days. However, in the event the deficiency is not met within the requisite five business days, a pattern day trader may not be permitted to execute new transactions unless the margin required is on deposit. This restriction must remain in effect for 90 days or until a deposit sufficient to cover the deficiency is received. Again, as with non-pattern day traders, the member organization must take a one time capital charge on the sixth business day for any unmet deficiency.

When a pattern day trader deposits funds to meet a day trade equity or maintenance margin requirement, those funds may not be withdrawn for a minimum of two (2) business days following the close of business on the day of deposit. This requirement is intended to curtail day trading that is not supported by the day trader's own funds. Day traders are able in many instances to borrow on an overnight basis from various sources in order to meet a day trading requirement. By disallowing next-day withdrawals of funds deposited to meet a day trading requirement, it is expected that lenders will be less inclined to loan funds to a day trader if the funds can't be repaid the following day.

When two or more day trades occur on the same day, the margin required may be computed utilizing the highest individual open position in dollar terms on that day, provided a record of the ''time and tick'' of each transaction is maintained showing the sequence in which each day trade was completed. This provision is applicable to both

[7] 12 CFR 220 *et seq.*

[8] *See* 12 CFR 220.1(b)(2).

non-pattern and pattern day traders. As noted above for pattern day traders, this privilege must be withdrawn if the day trading buying power is exceeded.

2. Statutory Basis

The proposed day trading rules are intended to control the amount of day trading customers can undertake and thereby prevent excessive use of credit on an intra-day basis. As such, the proposed rule change is consistent with and furthers the objectives of Section 6(b)(5) of the Act,[9] in that it is designed to perfect the mechanisms of a free and open market and to protect investors and the public interest. Furthermore, the proposed day trading rules are consistent with Section 7(a) of Act [10] and the rules and regulations of the Board of Governors of the Federal Reserve System, in that control of excessive credit for purchasing or carrying securities is the fundamental purpose.

B. Self-Regulatory Organization's Statement on Burden on Competition

The Exchange does not believe that the proposed rule change will impose any burden on competition that is not necessary or appropriate in furtherance of purposes of the Act.

C. Self-Regulatory Organization's Statement on Comments on the Proposed Rule Change Received From Members, Participants or Others

No written comments were solicited or received with respect to the proposed rule change.

III. Date of Effectiveness of the Proposed Rule Change and Timing for Commission Action

The foregoing rule change has become effective upon filing pursuant to Section 19(b)(3)(A)(iii) of the Act [11] and Rule 19b-4(f)(6) [12] thereunder because the proposed rule change does not (i) significantly affect the protection of investors or the public interest; (ii) impose any significant burden on competition; and (iii) become operative for 30 days from the date on which the proposed rule change was filed, or such shorter time as the Commission may designate. At any time within 60 days of the filing of the proposed rule change, the Commission may summarily abrogate such rule change if it appears to the Commission that such action is necessary or appropriate in the public interest, for the protection of investors, or otherwise in furtherance of the purposes of the Act.

IV. Solicitation of Comments

Interested persons are invited to submit written data, views and arguments concerning the foregoing, including whether the proposed rule change, as amended, is consistent with the Act. Persons making written submissions should file six copies thereof with the Secretary, Securities and Exchange Commission, 450 Fifth Street, NW, Washington, DC 20549–0609. Copies of the submission, all subsequent amendments, all written statements with respect to the proposed rule 4 change that are filed with the Commission, and all written communications relating to the proposed rule change between the Commission and any person, other than those that may be withheld from the public in accordance with the provisions of 5 U.S.C. 552, will be available for inspection and copying in the Commission's Public Reference Room. Copies of such filing will also be available for inspection and copying at the principal office of the CBOE. All submissions should refer to File No. SR–CBOE–2002–70 and should be submitted by January 17, 2003.

For the Commission, by the Division of Market Regulation, pursuant to delegated authority.[13]

J. Lynn Taylor,

Assistant Secretary.

[FR Doc. 02–32798 Filed 12–26–02; 8:45 am]

BILLING CODE 8010–01–P

[9] 15 U.S.C. 78(f)(b)(5).

[10] 15 U.S.C. 78g(a).

[11] 15 U.S.C. 78s(b)(3)(A)(iii).

[12] 17 CFR 240.19b–4(f)(6).

[13] 17 CFR 200.30–3(a)(12).

SECURITIES AND EXCHANGE COMMISSION

[Release No. 34–47035; File No. SR–ISE–2002–28]

Self-Regulatory Organizations; Notice of Filing of Proposed Rule Change by the International Securities Exchange LLC to Increase the Number of Authorized Shares of Class B Common Stock, Series B–2 From 100 to 130

December 19, 2002.

Pursuant to Section 19(b)(1) of the Securities Exchange Act of 1934 (''Act'') [1] and Rule 19b–4 thereunder,[2] notice is hereby given that on November 21, 2002, the International Securities Exchange, Inc. (''ISE'' or ''Exchange'') filed with the Securities and Exchange Commission (''Commission'') the proposed rule change as described in Items I, II, and III below, which Items have been prepared by the Exchange. The Commission is publishing this notice to solicit comments on the proposed rule change from interested persons.

I. Self-Regulatory Organization's Statement of the Terms of Substance of the Proposed Rule Change

The ISE proposes to increase the number of authorized shares of Class B Common Stock, Series B–2 from 100 to 130. This increase would result in the creation of 30 additional Competitive Market Maker (''CMM'') Memberships. The text of the proposed rule change is available at the ISE and at the Commission.

II. Self-Regulatory Organization's Statement of the Purpose of, and Statutory Basis for, the Proposed Rule Change

In its filing with the Commission, the ISE included statements concerning the purpose of and basis for the proposed rule change and discussed any comments it received on the proposed rule change. The text of these statements may be examined at the places specified in Item IV below. The ISE has prepared summaries, set forth in Sections A, B, and C below, of the most significant aspects of such statements.

A. Self-Regulatory Organization's Statement of the Purpose of, and Statutory Basis for, the Proposed Rule Change

1. Purpose

The purpose of the proposed rule change is to increase the number of authorized shares of Class B Common Stock, Series B–2 from 100 to 130. This increase would result in the creation of 30 additional CMM Memberships.[3] CMMs are market makers that compete with a Primary Market Maker (''PMM'') and other CMMs to provide liquidity on the Exchange. The Exchange has allocated its listed options into 10 groups or ''Bins,'' and currently assigns one PMM and 10 CMMs to each Bin. Under this proposal, the Exchange would add three additional CMMs to each Bin.

The Board of Directors (the ''Board'') has established an Ad Hoc Committee on the Sale of CMM Trading Rights (the ''Committee'') to sell the additional Memberships, identifying both the purchasers of these Memberships and the price at which these Memberships would be sold. The Board's intent is that the new Memberships be sold to broker-

[1] 15 U.S.C. 78s(b)(1).

[2] 17 CFR 240.19b–4.

[3] ISE Rule 100(19) defines ''Membership'' as the ''trading privileges associated with a share of Class B Common Stock.''

dealers that both would provide market making expertise and liquidity to the Exchange and that have significant customer order flow to send to the Exchange. There are no restrictions or limitations on the price at which the Memberships can be sold. The Exchange would distribute all proceeds received from these sales to holders of Class A Common Stock by way of a dividend.

The ISE believes that the sale of 30 additional CMM Memberships would increase the depth and liquidity of the Exchange's market. It also would provide more broker-dealers with an opportunity to participate on the Exchange. The Exchange has carefully evaluated its system capacity and believes that it has more than sufficient capacity to be able to handle the increased number of CMM Members without any adverse effects. Finally, the Exchange would require that a purchaser of one of these new Memberships that is not already a CMM to meet all Exchange requirements currently applicable to CMM Members.[4]

2. Statutory Basis

The Exchange believes that the proposed rule change is consistent with Section 6(b) of the Act[5] in general, and furthers the objectives of Section 6(b)(5) of the Act[6] in particular, because it is designed to prevent fraudulent and manipulative acts and practices, to promote just and equitable principles of change, to remove impediments to and perfect the mechanism of a free and open market and a national market system, and, in general, to protect investors and the public interest.

B. Self-Regulatory Organization's Statement on Burden on Competition

This proposed rule change does not impose any burden on competition that is not necessary or appropriate in furtherance of the purposes of the Exchange Act.

C. Self-Regulatory Organization's Statement on Comments on the Proposed Rule Change Received From Members, Participants or Others

The Exchange has not solicited, and does not intend to solicit, comments on this proposed rule change. The Exchange has not received any unsolicited written comments from members or other interested parties.

[4] The ISE believes that this proposed rule change is similar to a filing by the American Stock Exchange LLC to increase the number of its memberships. *See* Securities Exchange Act Release No. 45130 (December 5, 2001), 66 FR 64324 (December 12, 2001).

[5] 15 U.S.C. 78f(b).

[6] 15 U.S.C. 78f(b)(5).

III. Date of Effectiveness of the Proposed Rule Change and Timing for Commission Action

Within 35 days of the date of publication of this notice in the **Federal Register** or within such longer period (i) as the Commission may designate up to 90 days of such date if it finds such longer period to be appropriate and publishes its reasons for so finding or (ii) as to which the Exchange consents, the Commission will:

(A) By order approve such proposed rule change, or

(B) institute proceedings to determine whether the proposed rule change should be disapproved.

IV. Solicitation of Comments

Interested persons are invited to submit written data, views and arguments concerning the foregoing, including whether the proposed rule change, as amended, is consistent with the Act. Persons making written submissions should file six copies thereof with the Secretary, Securities and Exchange Commission, 450 Fifth Street, NW., Washington, DC 20549–0609. Copies of the submission, all subsequent amendments, all written statements with respect to the proposed rule change that are filed with the Commission, and all written communications relating to the proposed rule change between the Commission and any person, other than those that may be withheld from the public in accordance with the provisions of 5 U.S.C. 552, will be available for inspection and copying in the Commission's Public Reference Room. Copies of such filing will also be available for inspection and copying at the principal office of the ISE. All submissions should refer to File No. SR–ISE–2002–28 and should be submitted by January 17, 2003.

For the Commission, by the Division of Market Regulation, pursuant to delegated authority.[7]

J. Lynn Taylor,

Assistant Secretary.

[FR Doc. 02–32640 Filed 12–26–02; 8:45 am]

BILLING CODE 8010–01–P

[7] 17 CFR 200.30–3(a)(12).

SECURITIES AND EXCHANGE COMMISSION

[Release No. 34–47060; File No. SR–NASD–2002–112]

Self-Regulatory Organizations; Notice of Filing of Proposed Rule Change and Amendment No. 1 by National Association of Securities Dealers, Inc. to Amend NASD Rule 3070 to Require Members to File Copies of Criminal and Civil Complaints and Arbitration Claims With NASD

December 20, 2002.

Pursuant to Section 19(b)(1) of the Securities Exchange Act of 1934 (''Act''),[1] and Rule 19b–4 thereunder,[2] notice is hereby given that on August 15, 2002, the National Association of Securities Dealers, Inc. (''NASD'') filed with the Securities and Exchange Commission (''Commission'' or ''SEC'') the proposed rule change as described in Items I, II, and III below, which Items have been prepared by NASD. On December 9, 2002, NASD filed Amendment No. 1 to the proposed rule change.[3] The Commission is publishing this notice to solicit comments on the proposed rule change, as amended, from interested persons.

I. Self-Regulatory Organization's Statement of the Terms of Substance of the Proposed Rule Change

NASD is proposing to amend Rule 3070 of its rules to require members promptly to file copies with NASD of certain criminal and civil complaints and arbitration claims against a member or a person associated with a member. Below is the text of the proposed rule change as amended. Proposed new language is in italics; proposed deletions are in brackets.

3070. Reporting Requirement

(a) through (c) No change.

(d) Nothing contained in [paragraphs (a), (b) and (c) of] this Rule shall eliminate, reduce, or otherwise abrogate the responsibilities of a member or person associated with a member to promptly file with full disclosure, required amendments to Form BD, Forms U–4 and U–5, or other required filings, and to respond to [the Association] *NASD* with respect to any customer complaint, examination, or inquiry.

[1] 15 U.S.C. 78s(b)(1).

[2] 17 CFR 240.19b–4.

[3] *See* letter from Patrice Gliniecki, Vice President and Deputy General Counsel, NASD, to Katherine A. England, Assistant Director, Division of Market Regulation, SEC, dated December 6, 2002, and enclosures (''Amendment No. 1''). Amendment No. 1 replaced the original rule filing in its entirety.

(e) Any member subject to substantially similar reporting requirements of another self-regulatory organization of which it is a member is exempt from [the provisions] *paragraphs (a), (b) and (c)* of this Rule.

(f) Each member shall promptly file with NASD copies of:

(1) any indictment, information or other criminal complaint or plea agreement for conduct reportable under paragraph (a)(5) of this Rule;

(2) any complaint in which a member is named as a defendant or respondent in any securities or commodities-related private civil litigation;

(3) any securities or commodities-related arbitration claim filed against a member in any forum other than the NASD Dispute Resolution forum;

(4) any indictment, information or other criminal complaint, any plea agreement, or any private civil complaint or arbitration claim against a person associated with a member that is reportable under question 14 on Form U–4, irrespective of any dollar thresholds Form U–4 imposes for notification, unless, in the case of an arbitration claim, the claim has been filed in the NASD Dispute Resolution forum.

(g) Members shall not be required to comply separately with paragraph (f) in the event that any of the documents required by paragraph (f) have been the subject of a request by NASD's Registration and Disclosure staff, provided that the member produces those requested documents to the Registration and Disclosure staff not later than 30 days after receipt of such request. This paragraph does not supersede any NASD rule or policy that requires production of documents specified in paragraph (f) sooner than 30 days after receipt of a request by the Registration and Disclosure staff.

* * * * *

II. Self-Regulatory Organization's Statement of the Purpose of, and Statutory Basis for, the Proposed Rule Change

In its filing with the Commission, NASD included statements concerning the purpose of and basis for the proposed rule change and discussed any comments it received on the proposed rule change. The text of these statements may be examined at the places specified in Item IV below. NASD has prepared summaries, set forth in Sections A, B, and C below, of the most significant aspects of such statements.

A. Self-Regulatory Organization's Statement of the Purpose of, and Statutory Basis for, the Proposed Rule Change

1. Purpose

The proposed rule change would amend NASD Rule 3070 to require members to file promptly with NASD copies of certain criminal and civil complaints and arbitration claims against the member or a person associated with the member. The purpose of the rule proposal is to improve the quality and flow of information to NASD with respect to allegations of broker misconduct, so that NASD can enhance investor protection efforts by promptly taking appropriate regulatory action to address the specific alleged misconduct and to prevent similar or related misconduct in the future.

Specifically, the proposed rule change would require members to file with NASD copies of (1) any criminal complaints filed against the member or plea agreements entered into by the member that are covered by the rule; (2) any securities or commodities-related private civil complaints filed against the member; (3) any arbitration claim against the member (except those claims that have already been filed with NASD Dispute Resolution, in which case NASD obtains copies of such claims directly from NASD Dispute Resolution); and (4) any criminal complaint or plea agreement, private civil complaint or arbitration claim against an associated person that is reportable under question 14 on Form U–4, irrespective of any dollar threshold requirements that question imposes for notification (except those arbitration claims that have already been filed with NASD Dispute Resolution). To avoid duplicative filing, the rule proposal also would provide that members need not separately produce the above-referenced documents if they have already been the subject of a request by NASD's Registration and Disclosure staff. The Registration and Disclosure staff sometimes requests these documents to determine whether members have met Form U–4 and other reporting requirements and whether an associated person is subject to a statutory disqualification. However, the rule proposal would require members to respond not later than 30 days after receiving such a request from NASD's Registration and Disclosure staff and, further, the rule proposal would not supersede any other NASD rule or policy that requires a more prompt response to such a document request.

Rule 3070 currently requires, among other things, that a member report to NASD when it is a defendant or respondent in felony criminal proceedings, certain misdemeanor criminal proceedings, or in certain civil or arbitration actions. As to the latter, Rule 3070(a)(7) requires that a member report to NASD when the member or a person associated with the member is a defendant or respondent in securities or commodities-related civil litigation or arbitration only when the proceeding has been disposed of by a judgment, award or settlement in an amount exceeding either $15,000 (if the defendant or respondent is an associated person) or $25,000 (if defendant or respondent is the member). No existing rules require a member routinely to file copies with NASD of complaints filed against it in any legal proceedings.

Similar to Rule 3070, question 14 on Form U–4 requires notice that an associated person has been charged or convicted of a felony or certain misdemeanors. It further requires notice that an associated person has been named as a respondent or defendant in a consumer-initiated arbitration or civil litigation involving a sales practice violation that is pending, resulted in a judgment, settled for $10,000 or more, or contains a claim for compensatory damages of at least $5,000. However, Form U–4 does not require that the member or associated person file with NASD as a matter of course a copy of the complaint that initiates such proceedings or any plea agreements to resolve reportable criminal charges. The rule proposal would require a member to file copies of any criminal complaint, plea agreement, private civil complaint or arbitration claim that is reportable under question 14 on Form U–4, irrespective of any dollar threshold requirements that may be specified to trigger reporting on Form U–4 (except those arbitration claims that have already been filed with NASD Dispute Resolution).

NASD believes the rule proposal would enhance its regulatory efforts and investor protection mission. Absent the proposed filing requirements, in many instances, NASD might never learn of the specific allegations unless they are also voluntarily reported to NASD or, pursuant to Rule 3070(a)(2), are the subject of a written customer complaint to the member involving allegations of theft or misappropriation of funds or securities, or of forgery. Regulation will be more effective if NASD obtains the detailed allegations at the time a criminal, civil or arbitration complaint or claim is filed, so that an inquiry, if

warranted, can begin promptly. Moreover, the information can be combined with other sources of regulatory intelligence to identify patterns and trends at the earliest possible stage, thereby deploying resources to high risk areas that better protect investors. With respect to associated persons, it is important to receive copies of complaints and claims reportable under question 14 on Form U–4, even when they fall below specified dollar thresholds, as such matters may also point to trends or otherwise flag conduct where regulatory action might be warranted.

NASD believes the regulatory benefits of the proposed rule change outweigh the additional burden on members to file with NASD copies of the specified documents, and NASD further believes that the rule proposal minimizes that burden in that the rule requires only the filing of those complaints and claims most likely to reveal information to assist its regulatory mission. For example, members would not be required to file private civil litigation complaints or arbitration claims that do not relate to securities or commodities-related conduct. Moreover, the proposal would not require members to file with NASD any arbitration claims that are originally filed in the NASD Dispute Resolution forum. NASD is already incurring the cost to make copies of those claims and will continue to do so under the proposal. The rule proposal further carves out those documents that have already been requested by NASD's Registration and Disclosure staff, provided such documents are produced to Registration and Disclosure within 30 days of the request. As with other complaints and claims that would be required to be filed under the proposal, the Dispute Resolution arbitration claims and the documents requested by NASD's Registration and Disclosure staff would be forwarded after copying to a unit within NASD that will evaluate the allegations in the documents for possible regulatory action.

2. Statutory Basis

NASD believes that the proposed rule change is consistent with the provisions of Section 15A(b)(6) of the Act [4], which requires, among other things, that NASD's rules be designed to prevent fraudulent and manipulative acts and practices, to promote just and equitable principles of trade, and, in general, to protect investors and the public interest. NASD believes that the proposal will improve its ability to detect and prevent fraudulent and manipulative conduct and to develop regulatory responses to problem areas at the earliest possible time.

B. Self-Regulatory Organization's Statement on Burden on Competition

NASD does not believe that the proposed rule change will result in any burden on competition that is not necessary or appropriate in furtherance of the purposes of the Act, as amended.

C. Self-Regulatory Organization's Statement on Comments on the Proposed Rule Change Received From Members, Participants or Others

Written comments were neither solicited nor received.

III. Date of Effectiveness of the Proposed Rule Change and Timing for Commission Action

Within 35 days of the date of publication of this notice in the **Federal Register** or within such longer period (i) as the Commission may designate up to 90 days of such date if it finds such longer period to be appropriate and publishes its reasons for so finding or (ii) as to which the self-regulatory organization consents, the Commission will:

(A) By order approve such proposed rule change, or

(B) institute proceedings to determine whether the proposed rule change should be disapproved.

IV. Solicitation of Comments

Interested persons are invited to submit written data, views, and arguments concerning the foregoing, including whether the proposal is consistent with the Act. Persons making written submissions should file six copies thereof with the Secretary, Securities and Exchange Commission, 450 Fifth Street, NW., Washington, DC 20549–0609. Copies of the submission, all subsequent amendments, all written statements with respect to the proposed rule change that are filed with the Commission, and all written communications relating to the proposed rule change between the Commission and any person, other than those that may be withheld from the public in accordance with the provisions of 5 U.S.C. 552, will be available for inspection and copying in the Commission's Public Reference Room. Copies of such filing will also be available for inspection and copying at the principal office of NASD. All submissions should refer to file number SR–NASD–2002–112 and should be submitted by January 17, 2003.

For the Commission, by the Division of Market Regulation, pursuant to delegated authority.[5]

J. Lynn Taylor,

Assistant Secretary.

[FR Doc. 02–32733 Filed 12–26–02; 8:45 am]

BILLING CODE 8010–01–P

[4] 15 U.S.C. 78o–3(b)(6).

[5] 17 CFR 200.30–(a)(12).

SECURITIES AND EXCHANGE COMMISSION

[Release No. 34–47056; File No. SR–NASD–2002–176]

Self-Regulatory Organizations; Notice of Filing and Immediate Effectiveness of Proposed Rule Change by National Association of Securities Dealers, Inc. and Renewal on Pilot Basis of NASD Rule 7010(k) Relating to Fees for the Trade Reporting and Compliance Engine (TRACE)

December 19, 2002.

Pursuant to Section 19(b)(1) of the Securities Exchange Act of 1934 (''Act''),[1] and Rule 19b–4 thereunder,[2] notice is hereby given that on December 13, 2002, the National Association of Securities Dealers, Inc. (''NASD''), filed with the Securities and Exchange Commission (''Commission'' or ''SEC'') the proposed rule change as described in Items I, II, and III below, which Items have been prepared by NASD. NASD has designated the proposed rule change as ''establishing or changing a due, fee, or other charge'' under Section 19(b)(3)(A)(ii) of the Act [3] and Rule 19b–4(f)(2) thereunder,[4] which renders the proposal effective upon filing with the Commission. The Commission is publishing this notice to solicit comments on the proposed rule change from interested persons.

I. Self-Regulatory Organization's Statement of the Terms of Substance of the Proposed Rule Change

NASD is proposing to amend NASD Rule 7010(k) relating to fees for the Trade Reporting and Compliance Engine (''TRACE'') prior to the expiration of the pilot program for fees on December 28, 2002. NASD is proposing to extend the pilot program for TRACE fees to February 28, 2003 and to modify the pilot effective January 1, 2003. As a result of the proposed rule change, the current fee structure would remain in effect to December 31, 2002. In addition, NASD is proposing technical revisions to Rule 7010(k) to replace references to

[1] 15 U.S.C. 78s(b)(1).

[2] 17 CFR 240.19b–4.

[3] 15 U.S.C. 78s(b)(3)(A)(ii).

[4] 17 CFR 240.19b–4(f)(2).

''the Association'' with ''NASD.'' Below is the text of the proposed rule change. Proposed new language is underlined; proposed deletions are in brackets.

* * * * *

7010. System Services

(k) Trade Reporting and Compliance Engine (TRACE)

(Rule 7010(k) shall expire on [December 28, 2002] *February 28, 2003,* unless amended, extended, or permanently adopted by NASD pursuant to SEC approval at or before such date).

The following charges shall be paid by participants for the use of the Trade Reporting and Compliance Engine (''TRACE''):

System fees	Transaction reporting fees	Market data fees
From 07/01/02 to 12/31/02: Web Browser Access: $85/month for 1 user IDs; $75/month for 2–9 user IDs; $70/month for 2–10+ user IDs, *except*. If less than 25 trades per month, in October, November, or December 2002—$25/month per user ID. *From 01/01/03 to 02/28/03: Level I Trade Report Only Web Browser Access—$25/month per user ID Level II Full Service Web Browser Access—$85/month per user ID*.	*From 07/01/02 to 12/31/02:* Trades up to and including $200,000 par value—$0.50/trade; Trades between $201,000 and $999,999 par value—$0.0025 times the number of bonds traded/trade; Trades of $1,000,000 par value or more—$2.50/trade *From 01/01/03 to 02/28/03:* *Trades up to and including $200,000 par value—$0.475/trade;* *Trades between $201,000 and $999,999 par value—$0.002375 times the number of bonds traded/trade;* *Trades of $1,000,000 par value or more—$2.375/trade*	BTDS Professional Display—$60/month per terminal
CTCI—$25/month/line	*From 07/01/02 to 12/31/02:* Cancel/Correct—$3/trade, *except* For October 2002—$1.50/trade For November 2002—$2.25/trade *From 01/01/03 to 02/28/03: Cancel/Correct—$1.50/trade*	BTDS Internal Usage Authorization—$500/month per organziation
Third Party—$25/month	*From 07/01/02 to 12/31/02:* ''As of'' Trade Late—$3/trade, *except* For October 2002—$1.50/trade For November 2002—$2.25/trade *From 01/01/03 to 02/28/03: ''As of'' Trade Late—$3/trade*	BTDS External Usage Authorization—$1,000/month per organization
From 07/01/02 to 12/31/02: PDN Administrative—$100/month/line. *As of 01/01/03: PDN service and corresponding fee eliminated*.	Browse & Query—$0.05 after first page	BTDS Non-Professional Display—$1/month per terminal *From 07/01/02 to 12/31/02:* Daily List Fax—$15/month per fax number/addressee *As of 01/01/03: Daily List Fax service and corresponding fee eliminated*
From 07/01/02 to 12/31/02: PDN Administrative—$100/month/line. *As of 01/01.03: PDN service and corresponding fee eliminated*.	Browse & Query—$0.05 after first page	BTDS Non-Professional Display—$1/month per terminal *From 07/01/02 to 12/31/02:* Daily List Fax—$15/month per fax number/addressee *As of 01/01/03: Daily List Fax service and corresponding fee eliminated*

(1) System Related Fees. There are three methods by which a member may report corporate bond transactions that are reportable to NASD pursuant to the Rule 6200 Series. A member may choose among the following methods to report data to NASD: (a) a TRACE web browser (either over the Internet or a secure private data network (''PDN'')); (b) a Computer-to-Computer Interface (''CTCI'') (either one dedicated solely to TRACE or a multi-purpose line); or (c) a third-party reporting intermediary. Fees will be charged based on the reporting methodology selected by the member.

(A) Web Browser Access

(i) For the period commencing July 1, 2002 and ending December 31, 2002, [T]*t*he charge to be paid by a member that elects to report TRACE data to NASD via a TRACE web browser shall be as follows: for the first user ID registered, a charge of $85 per month; for the next two through nine user IDs registered, a charge of $75 per month, per such additional user ID; and for ten or more user IDs registered, a charge of $70 per month, per user ID from two to ten or more. If a member reports less than 25 trades per month to the TRACE system in October, November, or December 2002, the charge to be paid by a member for the TRACE web browser shall be $25, per such month, per user ID.

(ii) For the period commencing January 1, 2003 and ending February 28, 2003, the charge to be paid by a member that elects to report TRACE data to NASD via a TRACE web browser shall be as follows: $25 per month, per user ID for Level I Trade Report Only Web Browser Access and $85 per month, per user ID for Level II Full Service Web Browser Access.

(iii) [In addition, a] *A* member that elects to report TRACE data to *NASD* [the Association] via a web browser over a secure PDN rather than over the Internet shall pay an additional administrative charge of $100 per

month, per line.[5] *As of January 1, 2003, PDN service and the corresponding fee shall be eliminated.*

(B) Computer-to-Computer Interface Access

The charge to be paid by a member that elects to report TRACE data to *NASD* [the Association] via a CTCI line shall be $25 per month, per line, regardless of whether the line is or is not dedicated exclusively for TRACE.[6]

(C) Third Party Access—Indirect Reporting

A member may elect to report TRACE data indirectly to *NASD* [the Association] via third-party reporting intermediaries, such as vendors, service bureaus, clearing firms, or the National Securities Clearing Corporation (''NSCC''). The charge to be paid by a member shall be $25 per month, per firm. Nothing in this Rule shall prevent such third-party intermediaries from charging additional fees for their services.

(2) Transaction Reporting Fees. For each transaction in corporate bonds that is reportable to NASD pursuant to the Rule 6200 Series, the following charges shall be assessed against the member responsible for reporting the transaction:

(A) Trade Reporting Fee

(i) For the period commencing July 1, 2002 and ending December 31, 2002, [A] *a* member shall be charged a Trade Reporting Fee based upon a sliding scale ranging from $0.50 to $2.50 per transaction based on the size of the reported transaction. Trades up to and including $200,000 par value will be charged a $0.50 fee per trade; trades between $201,000 par value and $999,999 par value will be charged a fee of $0.0025 multiplied by the number of bonds traded per trade; and trades of $1,000,000 par value or more will be charged a fee of $2.50 per trade.

(ii) For the period commencing January 1, 2003 and ending February 28, 2003, a member shall be charged a Trade Reporting Fee based upon a sliding scale ranging from $0.475 to $2.375 per transaction based on the size of the reported transaction. Trades up to and including $200,000 par value will be charged a $0.475 fee per trade; trades between $201,000 par value and $999,999 par value will be charged a fee of $0.002375 multiplied by the number of bonds traded per trade; and trades of $1,000,000 par value or more will be charged a fee of $2.375 per trade.

(B) Cancel or Correct Trade Fee

For the period commencing July 1, 2002 and ending December 31, 2002, [A] *a* member shall be charged a Cancel or Correct Trade Fee of $3.00 per canceled or corrected transaction. To provide firms with time to adjust to the new reporting system, the Cancel or Correct Trade Fee will not be charged until the later of October 1, 2002 or 90 days after the effective date of TRACE. For the month of October 2002, the Cancel or Correct Trade Fee shall be $1.50 per canceled or corrected transaction. For the month of November 2002, the Cancel or Correct Trade Fee shall be $2.25 per canceled or corrected transaction. *For the period commencing January 1, 2003 and ending February 28, 2003, a member shall be charged a Cancel or Correct Trade Fee of $1.50 per canceled or corrected transaction.*

(C) ''As of'' Trade Late Fee

For the period commencing July 1, 2002 and ending December 31, 2002, [A] *a* member shall be charged an ''As of'' Trade Late Fee of $3.00 per transaction for those transactions that are not timely reported ''As of'' as required by these rules. To provide firms with time to adjust to the new reporting system, the ''As of'' Trade Late Fee will not be charged until the later of October 1, 2002 or 90 days after the effective date of TRACE. *For the month of October 2002, the ''As of'' Trade Late Fee shall be $1.50 per such transaction. For the month of November 2002, the ''As of'' Trade Late Fee shall be $2.25 per such transaction. For the period commencing January 1, 2003 and ending February 28, 2003, a member shall be charged an ''As of'' Trade Late Fee of $3.00 per canceled or corrected transaction.*

(D) Browse and Query Fee

Members may review their own previously reported transaction data through a Browse and Query function. A member shall be charged $0.05 for each returned page of the query beyond the first page.

(3) Market Data Fees. Professionals and non-professionals may subscribe to receive real-time TRACE data disseminated by *NASD* [the Association] in one or more of the following ways for the charges specified. Members, vendors and other redistributors shall be required to execute appropriate agreements with *NASD* [the Association].

(A) Professional Fees

Professionals may subscribe for the following:

(i) Bond Trade Dissemination Service (''BTDS'') Professional Display Fee of $60 per month, per terminal charge for each interrogation or display device receiving real-time TRACE transaction data.

(ii) BTDS Internal Usage Authorization Fee of $500 per month, per organization charge for internal dissemination of real-time TRACE transaction data used in one or more of the following ways: internal operational and processing systems, internal monitoring and surveillance systems, internal price validation, internal portfolio valuation services, internal analytical programs leading to purchase/sale or other trading decisions, and other related activities.[7]

(iii) BTDS External Usage Authorization Fee of $1,000 per month, per organization charge for dissemination of real-time TRACE transaction data used in one or more of the following ways: repackaging of market data for delivery and dissemination outside the organization, such as indices or other derivative products.[8]

(B) Non-Professional Fees

The charge to be paid by a non-professional for each terminal receiving all or any portion of real-time TRACE transaction data disseminated through TRACE shall be $1.00 per month, per terminal.

(C) Non-Professional Defined

A ''non-professional'' is a natural person who is neither:

(i) registered nor qualified in any capacity with the Commission, the Commodity Futures Trading Commission, any state securities agency, any securities exchange or association, or any commodities or futures contract market or association; or

(ii) engaged as an ''investment adviser'' as that term is defined in Section 202(a)(11) of the Investment Advisers Act of 1940 (whether or not registered or qualified under that Act);

(iii) employed by a bank, insurance company or other organization exempt

[5] Charges that may be imposed by third parties, such as network providers, are not included in these fees.

[6] Charges that may be imposed by third parties, such as CTCI providers, are not included in these fees.

[7] Under this service, real-time TRACE transaction data may not be used in any interrogation display devices, any systems that permit end users to determine individual transaction pricing in real-time, or disseminated to any external source.

[8] Under this service, real-time TRACE transaction data may not be used in any interrogation display devices, any systems that permit end users to determine individual transaction pricing in real-time.

from registration under federal or state securities laws to perform functions that would require registration or qualification if such functions were performed for an organization not so exempt; nor

(iv) engaged in, or has the intention to engage in, any redistribution of all or any portion of the information disseminated through TRACE.

(4) Daily List Fax Service. Each subscriber for *NASD's* [the Association's] Daily List Fax Service shall be charged $15 per month, per fax number/addressee. *As of January 1, 2003, Daily List Fax service and the corresponding fee shall be eliminated.*

* * * * *

II. Self-Regulatory Organization's Statement of the Purpose of, and Statutory Basis for, the Proposed Rule Change

In its filing with the Commission, NASD included statements concerning the purpose of and basis for the proposed rule change and discussed any comments it received on the proposed rule change. The text of these statements may be examined at the places specified in Item IV below. NASD has prepared summaries, set forth in Sections A, B, and C below, of the most significant aspects of such statements.

A. Self-Regulatory Organization's Statement of the Purpose of, and Statutory Basis for, the Proposed Rule Change

1. Purpose

On July 1, 2002, the Trade Reporting and Compliance Engine (TRACE) became effective. On June 28, 2002, the Commission approved proposed NASD fees relating to the operation of the TRACE system (Rule 7010(k)) on a pilot basis for a six-month period expiring on December 28, 2002.[9] As part of that rule filing (Amendment No. 3 to SR–NASD–2002–63), NASD committed to review and reassess the proposed TRACE fees as soon as practicable and within six months after the effective date of TRACE, based on such factors as actual volume, usage, costs, and revenues.

On November 15, 2002, NASD submitted a proposed rule change to the SEC to reduce certain TRACE fees for the fourth quarter of 2002 (*i.e.*, the Web Browser Access Fee, the Cancel or Correct Fee, and the ''As of'' Trade Late Fee). These fees were reduced effective as of October 1, 2002.[10]

Review by NASD staff of the impact of the original fee structure indicates that a continuation of these fees in 2003 could potentially result in a significant financial burden to many firms. NASD is therefore proposing to extend the pilot program for TRACE fees to February 28, 2003 and to modify the pilot effective January 1, 2003. As a result of the proposed rule change, the current fee structure would remain in effect to December 31, 2002. NASD believes the proposed rule change will more equitably distribute the costs to participants of the TRACE system.

The current TRACE fee structure is divided into three general categories: system related fees, transaction reporting fees, and market data fees. After carefully reviewing the data collected to date, NASD staff is proposing to revise the current fee structure for TRACE as described below.

Proposed Amendments to Web Browser Access Fees

Under the TRACE rules, a member may report TRACE transaction data to NASD by one of three approved methods: (1) Web browser access; (2) direct computer-to-computer interface (''CTCI''); or (3) indirectly through third-parties, such as vendors, service bureaus, clearing firms, or the National Securities Clearing Corporation. Many small participants have registered to report TRACE transaction data to NASD through the web browser because the alternative methods are either not cost effective for them or not viable for their methods of processing data.

Following the effective date of TRACE, NASD staff received complaints from certain small firms regarding the burden of paying the Web Browser Access Fee. These firms complained that the small number of TRACE transactions that they handle and, therefore, are required to report on a monthly basis are not in line with the $85 per month cost for one web browser.

The current Web Browser Access Fee for each registered participant is: $85 per month for the first user ID; $75 per month for the second through ninth user ID; and $70 per month for the second through tenth or more user ID, if the participant registers ten or more user IDs. For the fourth quarter of 2002, the Web Browser Access Fee was reduced to $25 per month, per user ID for participants that reported less than 25 transactions during the months of October, November, and December 2002. The current web browser permits the reporting of transactions into the TRACE system, and, through the use of a query feature, allows participants access to TRACE transactions and real-time TRACE market data. At the time this service was established (and the fees determined), NASD did not have the capability to separate the real-time market data access feature from the web browser. As a result, the current web browser access fees were largely established based on the cost of including the real-time market data access feature to participants that elected to report TRACE transactions through the web browser.

Since that time, NASD staff has developed the capability to separate real-time market data access feature from the web browser. Commencing January 1, 2003, NASD is proposing that the Web Browser Access Fee be divided into two service levels—Level I with no access to real-time TRACE data, and Level II with access to real-time TRACE data.

A participant who registers for Level II Full Service Web Browser Access will be able to report TRACE data to NASD over the Internet and to use a query feature to receive real-time TRACE transaction data. Level II Full Service Web Browser Access Fee will be $85 per month, per user ID and will replace the current graduated fee structure. A participant who registers for Level I Trade Report Only Web Browser Access will be able to report TRACE data to NASD over the Internet. Level I access will not allow a participant to receive real-time TRACE transaction data. The proposed fee for Level I Trade Report Only Web Browser Access is $25 per month, per user ID. A participant may subscribe for a combination of Level I and Level II service based on usage and need.

The charge for the Level II Full Service Web Browser Access includes the cost of developing and providing real-time TRACE data access through the web browser. In addition, NASD is proposing to eliminate the multi-browser discount. While this may result in a small increase in costs for firms that use multiple copies of the browser with market data access, NASD staff believes the flat fee treats all firms equitably and may allow firms to achieve overall cost savings by subscribing to Level I Trade Report Only Web Browser Access, instead of Level II Full Service Web Browser Access, for those users who do not require real-time TRACE data access.

[9] The Commission approved Rule 7010(k) relating to TRACE fees on June 28, 2002 on a six-month pilot basis. *See* Securities Exchange Act Release No. 46145 (June 28, 2002), 67 FR 44911 (July 5, 2002) (File No. SR–NASD–2002–63).

[10] *See* Securities Exchange Act Release No. 46893 (November 22, 2002), 67 FR 72008 (December 3, 2002) (Notice of Filing and Immediate Effectiveness of SR–NASD–2002–167).

Proposed Amendments to Trade Reporting Fees

The current Trade Reporting Fees are based on a sliding scale that ranges from $0.50 to $2.50 per transaction based on the size of the reported transaction. Trades up to and including $200,000 par value are charged a $0.50 fee per trade; trades between $201,000 par value and $999,999 par value are charged a fee of $0.0025 multiplied by the number of bonds traded; and trades of $1,000,000 par value or more are charged a fee of $2.50 per trade.

Following the operation of TRACE, NASD staff has been collecting data on trade reporting fees incurred by participants. The revenues generated by this fee have been higher than originally forecasted. As a result, NASD is proposing that trade reporting fees be reduced by 5% for 2003. The Trade Reporting Fee will continue to be based on a sliding scale, but the range will be from $0.475 to $2.375 per transaction based on the size of the reported transaction. Trades up to and including $200,000 par value will be charged a $0.475 fee per trade; trades between $201,000 par value and $999,999 par value will be charged a fee of $0.002375 multiplied by the number of bonds traded, and trades of $1,000,000 par value or more will be charged a fee of $2.375 per trade.

Proposed Amendments to Cancel or Correct Fees

Cancel, correct, and ''As of'' transactions are used by participants to modify original trade entries. While a certain level of corrective transactions will always be necessary, NASD staff believes it is very important that trades be entered into the system correctly the first time to ensure that data disseminated through the TRACE system is accurate and to allow investors to rely on the data stream they receive. Further, the volume of corrective transactions will increase NASD's technology costs.

In the original fee proposal, NASD delayed the effectiveness of the Cancel or Correct Fee and the ''As of'' Late Fee to October 1, 2002. Based on NASD staff review of the data collected on such fees after the first three months of TRACE operation, on November 15, 2002, NASD submitted a proposed rule change to the SEC to phase in the implementation of the two fees during the last quarter of 2002 to allow participants greater time to adjust to the new system and focus on methods to reduce the likelihood of incurring such fees.[11]

The original charge for the Cancel or Correct Fee and the ''As of'' Late Fee was $3.00 for each such reported trade. For the month of October 2002, the Cancel or Correct Fee and the ''As of'' Late Fee charge assessed to each participant were reduced from $3.00 per trade to $1.50 per trade (a 50% discount), and for the month of November 2002, the Cancel or Correct Fee and the ''As of'' Late Fee were reduced from $3.00 per trade to $2.25 per trade (a 25% discount).

Based on further NASD staff analysis, the number of cancel and correct transactions submitted continues to be high. NASD staff has been contacting participants to review their systems and reporting methodologies to reduce erroneous reporting by participants. NASD staff still believes that over time the number of corrective transactions submitted to the system will decline. However, NASD believes that fees for corrective transactions are necessary to discourage erroneous reporting and to improve the integrity of disseminated data. Therefore, NASD is proposing that the Cancel or Correct Fee be reduced from $3.00 to $1.50 effective January 1, 2003. The ''As of'' Trade Late Fee will remain at $3.00 per trade.

Proposed Amendment to Eliminate PDN Administrative Fee

In the original fee proposal, NASD had provided users the option of reporting TRACE data through the web browser over a secure private data network rather than over the Internet. The cost of this additional service is $100 per month, per line. No users have subscribed to this service and, as a result, NASD is proposing that this service and the corresponding fee be eliminated effective January 1, 2003.

Proposed Amendment to Eliminate Daily List Fax Service

In the original fee proposal, NASD had provided for a daily list fax service that would provide subscribers with daily additions, deletions, and modifications to the list of TRACE-eligible securities. The charge for this service is $15 per month, per fax number/addressee. To date, one user has subscribed for this service and it is not cost effective for NASD to continue providing the service. As a result, NASD is proposing that this service and the corresponding fee be eliminated effective January 1, 2003.

Extension and/or Renewal of Pilot Program for TRACE Fees

NASD is proposing to extend and/or renew the pilot program for TRACE fees that is scheduled to expire on December 28, 2002 to expire on February 28, 2003. Further, NASD expects to submit a rule filing to the SEC prior to the February 28, 2003 expiration date seeking approval of a permanent fee structure for TRACE. NASD believes that the proposed fee structure for TRACE is reasonable, however, NASD is committed to an ongoing review and reassessment of TRACE fees during 2003. Based on data collected during 2003, NASD expects to recommend additional changes to the TRACE fee structure to ensure that the TRACE fees are reasonable.

NASD will continue to review and reassess the impact of the overall TRACE fee structure over time to ensure that the fees are reasonable and equitable for participants in the TRACE system.

2. Statutory Basis

NASD believes that the proposed rule change is consistent with the provisions of Section 15A(b)(5) of the Act,[12] which requires, among other things, that NASD's rules provide for the equitable allocation of reasonable dues, fees, and other charges among members and issuers and other persons using any facility or system which NASD operates or controls. NASD is proposing to extend the pilot program for TRACE fees to February 28, 2003 and to modify the pilot effective January 1, 2003. As a result of the proposed rule change, the current fee structure would remain in effect to December 31, 2002. NASD believes that such proposed rule change will more equitably allocate fees to NASD members during the early stages of implementing TRACE.

B. Self-Regulatory Organization's Statement on Burden on Competition

NASD does not believe that the proposed rule change will result in any burden on competition that is not necessary or appropriate in furtherance of the purposes of the Act, as amended.

C. Self-Regulatory Organization's Statement on Comments on the Proposed Rule Change Received from Members, Participants or Others

Written comments were neither solicited nor received.

[11] *Id.*

[12] 15 U.S.C. 78o–3(b)(5).

III. Date of Effectiveness of the Proposed Rule Change and Timing for Commission Action

The proposed rule change is effective pursuant to Section 19(b)(3)(A)(ii) of the Act[13] and Rule 19b–4(f)(2) thereunder,[14] because the proposal is ''establishing or changing a due, fee, or other charge.'' The rule change has become effective pursuant to Section 19(b)(3)(A) of the Act and Rule 19b–4(f)(2) thereunder, and will be operational immediately as of the dates described in the proposed rule change. The proposed rule change to replace references to ''the Association'' with ''NASD'' is effective immediately pursuant to Section 19(b)(3)(A)(iii),[15] as it is concerned solely with the administration of the self-regulatory organization.

At any time within 60 days of this filing, the Commission may summarily abrogate this proposal if it appears to the Commission that such action is necessary or appropriate in the public interest, for the protection of investors, or otherwise in furtherance of the purposes of the Act.

IV. Solicitation of Comments

Interested persons are invited to submit written data, views, and arguments concerning the foregoing, including whether the proposal is consistent with the Act. Persons making written submissions should file six copies thereof with the Secretary, Securities and Exchange Commission, 450 Fifth Street, NW, Washington, DC 20549–0609. Copies of the submission, all subsequent amendments, all written statements with respect to the proposed rule change that are filed with the Commission, and all written communications relating to the proposed rule change between the Commission and any person, other than those that may be withheld from the public in accordance with the provisions of 5 U.S.C. 552, will be available for inspection and copying in the Commission's Public Reference Room. Copies of such filing will also be available for inspection and copying at the principal office of NASD. All submissions should refer to file number SR–NASD–2002–176 and should be submitted by January 17, 2003.

[13] 15 U.S.C. 78s(b)(3)(A)(ii).

[14] 17 CFR § 240.19b–4(f)(2).

[15] 15 U.S.C. 78s(b)(3)(A)(iii).

For the Commission, by the Division of Market Regulation, pursuant to delegated authority.[16]

J. Lynn Taylor,

Assistant Secretary.

[FR Doc. 02–32734 Filed 12–26–02; 8:45 am]

BILLING CODE 8010–01–P

[16] 17 CFR 200.30–3(a)(12).

SECURITIES AND EXCHANGE COMMISSION

[Release No. 34–47057; File No. SR–NASD–2002–174]

Self-Regulatory Organizations; Notice of Filing of Proposed Rule Change by National Association of Securities Dealers, Inc. Relating to Increasing Dissemination of Debt Securities Transaction Information Under the TRACE Rules

December 19, 2002.

Pursuant to section 19(b)(1) of the Securities Exchange Act of 1934 (''Act''),[1] and Rule 19B–4 thereunder,[2] notice is hereby given that on December 6, 2002, the National Association of Securities Dealers, Inc. (''NASD'') filed with the Securities and Exchange Commission (''SEC'' or ''Commission'') the proposed rule change as described in Items I, II, and III below, which Items have been prepared by NASD. NASD filed an amendment to the proposed rule change on December 18, 2002.[3] The Commission is publishing this notice to solicit comments on the proposed rule change, as amended, from interested persons. For the reasons discussed below, NASD is requesting that the Commission grant accelerated approval of the proposed rule change.

I. Self-Regulatory Organization's Statement of the Terms of Substance of the Proposed Rule Change

NASD is proposing to amend: (1) NASD Rule 6250 to provide for the dissemination of transaction information on additional Investment Grade TRACE-eligible securities under the NASD Rule 6200 Series (also known as the Trade Reporting and Compliance Engine (''TRACE'') Rules)[4] (2) NASD Rule 6210(e) to include the term ''customer'' in the defined term, ''party to the transaction''; (3) NASD Rule 6260 to make minor clarifications; and, (4) in the provisions referenced in (1) through (3) above, to delete the term ''Association'' and to replace it with ''NASD.'' Below is the text of the proposed rule change. Proposed new language is in italics; proposed deletions are in brackets.

* * * * *

6200. Trade Reporting and Compliance Engine (TRACE)

6210. Definitions

The terms used in this Rule 6200 Series shall have the same meaning as those defined in [the Association's] *NASD's* By-Laws and Rules unless otherwise specified.

(a) through (d) No change.

(e) The term ''*party to the transaction*'' [''parties to the transaction''] shall mean [the] *an* introducing broker-dealer, if any, [and the] an executing broker-dealer, *or a customer. For the purposes of this Rule, customer includes a broker-dealer that is not an NASD member.*

(f) through (i) No change.

* * * * *

6250. Dissemination of Corporate Bond Trade Information

(a) General Dissemination Standard

Immediately upon receipt of transaction reports received at or after 8 a.m. through 6:29:59 p.m. Eastern Time, [the Association] *NASD* will disseminate transaction information (except that market aggregate information and last sale information will not be updated after 5:15 p.m. Eastern Time) [relating to transactions] in [:] *the securities described below.*

(1) [a] *A* TRACE-eligible security [having an initial issuance size of $1 billion or greater] that is Investment Grade at the time of receipt of the transaction report *and has an initial issuance size of $1 billion or greater.* [; and]

(2) [a] *A* TRACE-eligible security that is [designated for dissemination according to the following criteria and is] Non-Investment Grade at the time of receipt of the transaction report *and is designated by NASD for dissemination according to the following criteria.*

(A) through (B) No change.

(3) A TRACE-eligible security that is Investment Grade, is rated by Moody's Investors Service, Inc. as ''A3''[5] *or*

[1] 15 U.S.C. 78s(b)(1).

[2] 17 CFR 240.19b–4.

[3] *See* letter from Barbara Z. Sweeney, Senior Vice President and Corporate Secretary, NASD, to Katharine A. England, Assistant Director, Division of Market Regulation, SEC, dated December 18, 2002, and enclosures (''Amendment No. 1''). In Amendment No. 1, NASD deleted proposed changes to NASD Rule 6230 and NASD Rule 9610(a) that would have allowed members to request exemptive relief from NASD Rule 6230.

[4] The terms ''Investment Grade'' and ''TRACE-eligible security'' are defined in TRACE Rule 6210, Definitions, in paragraphs (h) and (a), respectively.

[5] *Moody's Investors Service, Inc. (''Moody's'') is a nationally recognized statistical rating organization. Moody's is a registered trademark of Moody's*

higher, and by Standard & Poor's, a division of McGraw Hill Co., Inc., as ''A–''[6] *or higher, and has an original issue size of $100 million or greater. If a security is rated under this provision to qualify for dissemination at any time on or after the effective date of the rule, dissemination of transaction information on the security will continue under this paragraph unless the security is downgraded below Baa3/BBB–.*

(4) Ninety TRACE-eligible securities designated by NASD that are rated Baa/BBB at the time of designation, according to the following standards.

(A) Three groups composed of 30 TRACE-eligible securities (Group 1, Group 2, and Group 3) shall be designated by NASD. At the time of designation, each TRACE-eligible security in Group 1 must be rated ''Baa1/BBB+;'' and each TRACE-eligible security in Group 2 and Group 3, must be rated, respectively, ''Baa2/BBB,'' and ''Baa3/BBB–,'' provided that if a TRACE-eligible security is rated one of the ''Baa'' ratings by Moody's and one of the ''BBB'' ratings by S&P and the ratings indicate two different levels of credit quality, the lower of the two ratings will be used to determine the group to which a debt security will be assigned under paragraph (a)(4).

(B) A TRACE-eligible security that has a rating from only one rating agency will not be designated under paragraph (a)(4).

(C) Dissemination of transaction information on a TRACE-eligible security that is designated under paragraph (a)(4) will not be discontinued if one rating is, or both ratings are downgraded or upgraded.

(b) through (d) No change.

6260. Managing Underwriter Obligation To Obtain CUSIP

(a) No change.

(b) For such TRACE-eligible securities, the managing underwriter must provide to the TRACE Operations Center: (1) The CUSIP number; (2) the issuer name; (3) the coupon rate; (4) the maturity; (5) whether Rule 144A applies; and (6) a brief description of the issue (*e.g.*, senior subordinated note, senior note), or if *any of items (2) through (6)* [such information] has not been determined, such other information as [the] NASD deems necessary. The managing underwriter must obtain the CUSIP number and provide it and the information listed as (2) through (6) not later than 5 p.m. on the business day preceding the day that the registration statement becomes effective, or, if registration is not required, the day before the securities will be priced. If an issuer notifies [an] *a managing* underwriter, or the issuer and the *managing* underwriter determine, that the TRACE-eligible securities of the issuer shall be priced, offered and sold the same business day in an intra-day offering under Rule 415 of the Securities Act of 1933 or Rule 144A of the Securities Act of 1933, the [member] managing underwriter shall provide the information not later than 5 p.m. on the day that the securities are priced and offered, provided that if such securities are priced and offered on or after 5:00 p.m., the [member] managing underwriter shall provide the information not later than 5 p.m. on the next business day. [A member] *The managing underwriter* must make a good faith determination that the security is a TRACE-eligible security before submitting the information to the TRACE Operations Center.

* * * * *

II. Self-Regulatory Organization's Statement of the Purpose of, and Statutory Basis for, the Proposed Rule Change

In its filing with the Commission, NASD included statements concerning the purpose of and basis for the proposed rule change and discussed any comments it received on the proposed rule change. The text of these statements may be examined at the places specified in Item IV below. NASD has prepared summaries, set forth in Sections A, B, and C below, of the most significant aspects of such statements.

A. Self-Regulatory Organization's Statement of the Purpose of, and Statutory Basis for, the Proposed Rule Change

1. Purpose

Increasing Transparency and Dissemination of Information

The main purpose of the proposed rule change is to provide additional transparency in the corporate bond market by increasing the categories of TRACE-eligible securities for which transaction information is required to be disseminated under NASD Rule 6250.

NASD currently requires that transaction information in two types of TRACE-eligible securities be disseminated upon receipt by TRACE. Dissemination is required for: (1) A TRACE-eligible security that is Investment Grade at the time of receipt of the transaction report and has an initial issuance size of $1 billion or greater (NASD Rule 6250(a)(1)); and, (2) 50 Non-Investment Grade[7] TRACE-eligible securities that are designated according to volume, price and other standards set forth in NASD Rule 6250(a)(2). Under the current provision, approximately 520 bonds have been subject to dissemination since TRACE began on July 1, 2002.[8]

Under the proposed rule change, NASD will require transaction information to be disseminated in two additional categories of Investment Grade TRACE-eligible securities. First, Investment Grade TRACE-eligible securities of at least $100 million par value (original issue size) or greater and rated by Moody's as ''A3'' or higher and S&P as ''A–'' or higher will be disseminated. In addition, a security in this group will continue to be disseminated even if the rating is downgraded, unless the rating decreases below Baa3/BBB–. (The lower of two ratings, if ''split,'' will be used to determine if dissemination must be discontinued.) Bonds that have a rating from only one agency will not be included in this group. *See* proposed NASD Rule 6250(a)(3).

Second, a group of 90 Investment Grade TRACE-eligible securities rated Baa/BBB (or ''medium grade''), which is the lowest Investment Grade category, will be selected by NASD, and transaction information on these debt

Investors Service. Moody's ratings are proprietary to Moody's and are protected by copyright and other intellectual property laws. Moody's licenses ratings to NASD. Ratings may not be copied or otherwise reproduced, repackaged, further transmitted, transferred, disseminated, redistributed or resold, or stored for subsequent use for any purpose, in whole or in part, in any form or manner or by any means whatsoever, by an person without Moody's prior written consent.

[6] *Standard & Poor's, a division of the McGraw-Hill Companies, Inc. (''S&P''), is a nationally recognized statistical rating organization. S&P's ratings are proprietary to S&P and are protected by copyright and other intellectual property laws. S&P's licenses ratings to NASD. Ratings may not be copied or otherwise reproduced, repackaged, further transmitted, transferred, disseminated, redistributed or resold, or stored for subsequent use for any such purpose, in whole or in part, in any form or manner or by any means whatsoever, by any persons without S&P's prior written consent.*

[7] The term, ''Non-Investment Grade'' is defined in TRACE Rule 6210(i).

[8] Minor fluctuations in the number of bonds disseminated occur because newly issued bonds are added if they meet the dissemination criteria, and outstanding bonds on which information is disseminated may no longer be disseminated, if, at some point, they fail to meet the disseminated criteria, or mature or are retired.

securities will be disseminated. NASD will select the securities in consultation with independent economists who will use the data from these securities as the basis for a study of the effect of price transparency on liquidity. The securities will be selected so that each of the three ratings subcategories for ''triple-B'' -rated bonds (*i.e.*, Baa1/BBB+, Baa2/BBB, and Baa3/BBB−) will be represented by a group of 30 debt securities. Every such issue shall remain subject to dissemination even if downgraded or upgraded. When an issue is ''split-rated'' so that one rating is one of the 3 ''Baa'' or ''BBB'' ratings set forth above and the second rating is a different ''Baa'' or ''BBB'' rating, the lower of the two ratings will be used to determine the category to which a debt security will be assigned under this provision. TRACE-eligible securities that have a rating from only one of the selected nationally recognized statistical rating organizations will not be selected for inclusion in this group. *See* proposed NASD Rule 6250(a)(4).

NASD believes the proposed rule change will substantially increase the amount of information available to the public and market participants about the debt markets. If the proposed rule change is approved, over 4,000 TRACE-eligible securities will be subject to dissemination under NASD Rule 6250, which represents approximately 75% of the current average daily trading volume of Investment Grade TRACE-eligible securities.[9] The proposed rule change substantially exceeds the anticipated increase in dissemination in the second phase of TRACE, ''Phase II,'' described in the original regulatory scheme approved by the SEC.[10] In addition, the proposed amendments are crafted to disseminate a large, diverse test group of 90 of the lowest rated Investment Grade TRACE-eligible debt securities to obtain additional empirical data about the impact that dissemination may have on the liquidity of a market or a market sector. Finally, the BTRC, a committee comprised of industry representatives, fully concurs with the proposal and believes it should be adopted.

Other Minor Changes

NASD is proposing minor changes to NASD Rule 6210(e) and NASD Rule 6260. In addition, NASD is proposing administrative changes to various rules that are the subject of this filing, to reflect recent NASD organizational changes.

In NASD Rule 6210(e), NASD is proposing to add the term, ''customer,'' to the defined term, ''party to the transaction.'' Under the TRACE Rules, a non-NASD-member customer of a broker-dealer, when buying or selling a security, is considered a ''party to the transaction.'' In addition, for purposes of the Rule, ''customer'' includes a broker-dealer that is not an NASD member. NASD believes that NASD Rule 6210(e) would be clearer if the term ''customer'' is included in the definition of ''party to the transaction,'' and the Rule clearly states that broker-dealers that are not NASD members are included in the term ''customer.''

In addition, NASD is proposing minor changes to NASD Rule 6260 to use the term, ''managing underwriter'' consistently when referring to a member that is responsible for complying with NASD Rule 6260 and to clarify that the CUSIP number of a TRACE-eligible security must be provided to NASD at all times to comply with NASD Rule 6260(b).

Finally, in the provisions that are subject to other amendments, NASD is deleting the term, ''Association,'' and substituting the term, ''NASD.'' These are administrative changes only to reflect recent NASD organizational changes.

2. Statutory Basis

NASD believes that the proposed rule change is consistent with the provisions of Section 15A(b)(6) of the Act,[1] which requires, among other things, that NASD's rules must be designed to prevent fraudulent and manipulative acts and practices, to promote just and equitable principles of trade, and, in general, to protect investors and the public interest. NASD believes that the proposed rule change, if approved, will protect investors and the public interest by, among other things, increasing transparency in the fixed income markets and clarifying other TRACE Rule provisions.

B. Self-Regulatory Organization's Statement on Burden on Competition

NASD does not believe that the proposed rule change will result in any burden on competition that is not necessary or appropriate in furtherance of the purposes of the Act, as amended.

C. Self-Regulatory Organization's Statement on Comments on the Proposed Rule Change Received From Members, Participants, or Others

Written comments were neither solicited nor received.

III. Date of Effectiveness of the Proposed Rule Change and Timing for Commission Action

NASD has requested that the Commission find good cause pursuant to Section 19(b)(2) for approving the proposed rule change prior to the 30th day after publication in the **Federal Register**. Because NASD believes investors would benefit and the public interest would be served by providing the public access more quickly to substantially more real-time transaction information and by adopting clarifying changes to the TRACE Rules, and in light of the fact that the public and members previously were given the opportunity to comment and did provide extensive comments about the dissemination of TRACE-eligible securities, NASD has requested that the Commission accelerate the effectiveness of the proposed rule change prior to the 30th day after its publication in the **Federal Register**.

Within 35 days of the date of publication of this notice in the **Federal Register** or within such longer period (i) as the Commission may designate up to 90 days of such date if it finds such longer period to be appropriate and publishes its reasons for so finding or (ii) as to which the self-regulatory organization consents, the Commission will:

A. By order approve such proposed rule change, or

B. Institute proceedings to determine whether the proposed rule change should be disapproved.

IV. Solictation of Comments

Interested persons are invited to submit written data, views and arguments concerning the foregoing, including whether the proposed rule change is consistent with the Act. Persons making written submissions should file six copies thereof with the

[9] Trading volume is the total par value of all Investment Grade TRACE-eligible securities traded (and reported) each day.

[10] *See* Securities Exchange Act Release No. 43873 (January 23, 2001); 66 FR 8131 (January 29, 2001) (''Approval Order''). In the Approval Order, the SEC approved NASD Rule 6250, which provided that initially, transaction information on publicly offered, Investment Grade bonds with an initial issuance size of $1 billion or greater, and the FIPS 50, would be distributed immediately. The SEC also discussed NASD's plans to phase in the dissemination of additional securities. Under the phase-in schedule, the Bond Transaction Reporting Committee (''BTRC''), an advisory committee of industry representatives, was to advise the NASD Board of Governors regarding liquidity issues. By the end of Phase I (September 30, 2002), the BTRC was obligated to recommend to the NASD Board ''dissemination protocols for investment grade bonds, starting with the largest issuance size, that, when combined together, make up the top 50% (by dollar volume) of such bonds.'' (66 FR 8131, 8134. Dissemination of these securities was to begin in Phase II. File No. SR–NASD–99–65.

[11] 15 U.S.C. 78o–3(b)(6).

refer to file number SR–NASD–2002–174 and should be submitted by January 17, 2003.

Secretary, Securities and Exchange Commission, 450 Fifth Street, NW., Washington, DC 20549–0609. Copies of the submission, all subsequent amendments, all written statements with respect to the proposed rule change that are filed with the Commission, and all written communications relating to the proposed rule change between the Commission and any person, other than those that may be withheld from the public in accordance with the provisions of 5 U.S.C. 552, will be available for inspection and copying in the Commission's Public Reference Room. Copies of such filing will also be available for inspection and copying at the principal office of the NASD. All submissions should refer to file number SR–NASD–2002–174 and should be submitted by January 17, 2003.

For the Commission, by the Division of Market Regulation, pursuant to delegated authority.[12]

J. Lynn Taylor

Assistant Secretary

[FR Doc. 02–32735 Filed 12–26–02; 8:45 am]

BILLING CODE 8010–01–P

SECURITIES AND EXCHANGE COMMISSION

[Release No. 34–47067; File No. SR–NASD–2002–177]

Self-Regulatory Organizations; National Association of Securities Dealers, Inc.; Notice of Filing and Immediate Effectiveness of Proposed Rule Change To Amend the Pricing Schedule for Nasdaq Trading Applications' Tools Plus Product

December 20, 2002.

Pursuant to Section 19(b)(1) of the Securities Exchange Act of 1934 (''Act''),[1] and Rule 19b–4 thereunder,[2] notice is hereby given that on December 13, 2002, the National Association of Securities Dealers, Inc. (''NASD'' or ''Association''), through its subsidiary, The Nasdaq Stock Market, Inc. (''Nasdaq''), filed with the Securities and Exchange Commission (''Commission'') the proposed rule change as described in Items I, II, and III below, which Items have been prepared by Nasdaq. The Commission is publishing this notice to solicit comments on the proposed rule change from interested persons.

I. Self-Regulatory Organization's Statement of the Terms of Substance of the Proposed Rule Change

Nasdaq proposes to amend NASD Rule 7050(e)(2), the pricing schedule for Nasdaq Trading Applications' Tools Plus product. Nasdaq will implement the proposed rule change immediately upon filing.

The text of the proposed rule change is below. Proposed new language is *italicized;* proposed deletions are in [brackets].

* * * * *

7050. Other Services

(a)–(d) No Change.

(e) Software Products

(1) No change.

(2) The following deposits and fees shall be paid by all customers of Tools Plus:

(A) No change.

(B) Terminal Charge

Fee Charge	Price
Terminal Charge per *full functionality* terminal [(''PT'')] equipped with Tools Plus (More than 30 terminals if customer signs two-year contract).	$500/[PT]*terminal*/month
(All other situations)	$759/[PT]*terminal*/month
Terminal Charge per correspondent/floor broker terminal equipped with Tools Plus	*$350/terminal*/month
Minimum [fee] *Terminal Charge*	$2,000/month
(C) Fee Charge	Price
Connection Charge to Nasdaq Computer-to-Computer Interface (CTCI)	$265/month
Connection Charge to Nasdaq Service Delivery Platform (SDP) (charged to subscribers who handle customer orders).	$250/month
Installation Fee[3] (one-time charge for Tools Plus and includes [one] *up to 15* terminal*s*).	$[13,550] *16,000*
(each additional *set of up to 15* terminal*s*)[3]	$[140] *13,000*
Port Charges (one-time charge per line)	$1,250
(one-time aggregate charge for two lines)	$2,500
Training Fee on-site at customers	$400/day (plus travel expenses)
Training Fee for course at Nasdaq Tools	$150/course
Electronic communication network (ECN) maintenance charge (charged to subscribers who route orders to ECN).	$250/per ECN/month

Market data redistribution charges, which are set by the relevant market data provider, are passed through to Tools Plus subscribers at cost.

(D) No change.

* * * * *

II. Self-Regulatory Organization's Statement of the Purpose of, and Statutory Basis for, the proposed Rule Change

In its filing with the Commission, Nasdaq included statements concerning the purpose of and basis for the proposed rule change and discussed comments it received on the proposed rule change. The text of these statements may be examined at the places specified in Item IV below. Nasdaq has prepared summaries, set forth below in Sections A, B, and C, of the most significant aspects of such statements.

[12] 17 CFR 200.30–3(a)(12).

[1] 15 U.S.C. 78s(b)(1).

[2] 17 CFR 240.19b–4.

[3] Installation Fee includes two hours of on-site training of customer personnel and all programming costs associated with one customized interface for the customer to access its clearing firm.

A. Self-Regulatory Organization's Statement of the Purpose of, and Statutory Basis for, the Proposed Rule Change

1. Purpose

Nasdaq is proposing to make several modifications to the price schedule for the Tools Plus software product offered by Nasdaq Trading Applications (''NTA'') (formerly Nasdaq Tools, Inc.). Specifically, Nasdaq is (i) modifying the price for installation of NTA's Tools Plus system, and (ii) establishing a price for a new type of Tools Plus terminal that Nasdaq will make available for use by correspondents and floor brokers.[4] Tools Plus is a software product that provides subscribers with order management and routing, trade reporting, clearing, and regulatory compliance functionality.

Installation Fee

Under the current pricing schedule for Tools Plus, a customer pays a fee of $13,550 for the installation of its first Tools Plus terminal and an incremental fee of $140 for the installation of each additional Tools Plus terminal. When Nasdaq installs Tools Plus at the offices of a customer, it must procure Nasdaq-owned hardware, such as servers, routers, and switches, that interfaces with the customer's terminals, as well as commercial software products that run on this equipment. The amount and complexity of hardware and software required to support each customer differs, based on a complex set of variables, including the number of employees of the customer that will use the product; the number, volume, and liquidity of the securities traded by the customer, the extent to which the customer engages in pre-open trading; and the data processing options selected by the customer. Nasdaq represents that the installation fee is intended to cover the costs of this hardware and software, as well as associated Nasdaq personnel costs. Nasdaq has concluded, however, that the current level of installation fees does not cover these costs in many cases. Accordingly, Nasdaq is increasing the basic installation fee to $16,000, with this fee covering the first 15 terminals installed. The fee for additional terminals will be $13,000 for each group of up to 15 terminals installed.

Correspondent/Floor Broker Terminal

Nasdaq is proposing to offer Tools Plus terminals with reduced functionality for use by correspondent firms or floor brokers to route orders to specified broker-dealers with whom they have an established relationship, at a reduced fee of $350 per terminal per month.[5] Unlike a full functionality terminal, the terminals would not contain functionality to accept order flow, to compile statistics on order execution, or to route orders to a wide range of market centers. Accordingly, Nasdaq believes that these terminals should be offered at a reduced price.

2. Statutory Basis

Nasdaq believes that the proposed rule change is consistent with the provisions of Section 15A of the Act,[6] in general, and with Section 15A(b)(5) of the Act,[7] in particular, in that it provides for the equitable allocation of reasonable dues, fees and other charges among members and issuers and other persons using any facility or system which the NASD operates or controls.

B. Self-Regulatory Organization's Statement on Burden on Competition

Nasdaq believes that the proposed rule change will not result in any burden on competition that is not necessary or appropriate in furtherance of the purposes of the Act.

C. Self-Regulatory Organization's Statement on Comments on the Proposed Rule Change Received from Members, Participants, or Others

Written comments were neither solicited nor received on the proposed rule change contained in this filing.

III. Date of Effectiveness of the Proposed Rule Change and Timing for Commission Action

The foregoing rule change has become effective pursuant to Section 19(b)(3)(A)(ii) of the Act[8] and subparagraph (f) of Rule 19b–4 thereunder,[9] because it establishes or changes a due, fee, or other charge imposed by the self-regulatory organization. At any time within 60 days of the filing of the proposed rule change, the Commission may summarily abrogate the rule change if it appears to the Commission that such action is necessary or appropriate in the public interest, for the protection of investors, or otherwise in furtherance of the purposes of the Act.

IV. Solicitation of Comments

Interested persons are invited to submit written data, views, and arguments concerning the foregoing, including whether the proposed rule change is consistent with the Act. Persons making written submissions should file six copies thereof with the Secretary, Securities and Exchange Commission, 450 Fifth Street, NW, Washington, DC 20549–0609. Copies of the submission, all subsequent amendments, all written statements with respect to the proposed rule change that are filed with the Commission, and all written communications relating to the proposed rule change between the Commission and any person, other than those that may be withheld from the public in accordance with the provisions of 5 U.S.C. 552, will be available for inspection and copying in the Commission's Public Reference Room. Copies of the filing will also be available for inspection and copying at the principal office of the NASD. All submissions should refer to file number SR–NASD–2002–177 and should be submitted by January 17, 2003.

For the Commission, by the Division of Market Regulation, pursuant to delegated authority.[10]

Margaret H. McFarland,

Deputy Secretary.

[FR Doc. 02–32790 Filed 12–26–02; 8:45 am]

BILLING CODE 8010–1–M

[4] To date, all of Nasdaq's customers for Tools Plus have been NASD members. Nasdaq anticipates, however, that some of the users of floor broker terminals may be non-members. Accordingly, Nasdaq represents that it will file a separate proposed rule change to establish Tools Plus pricing for non-members at levels identical to those established for members, and will not offer Tools Plus products to non-members prior to the effective date of that filing.

[5] *Id.*

[6] 15 U.S.C. 78*o*–3.

[7] 15 U.S.C. 78*o*–3(b)(5).

[8] 15 U.S.C. 78s(b)(3)(A)(ii).

[9] 17 CFR 240.19b–4(f)

[10] 17 CFR 200.30–3(a)(12).

SECURITIES AND EXCHANGE COMMISSION

[Release No. 34–47025; File No. SR–NYSE–2002–59]

Self Regulatory Organizations; Notice of Filing of Proposed Rule Change by the New York Stock Exchange, Inc. Relating to Pilot Programs for Mediation and Administrative Conferences

Pursuant to Section 19(b)(1) of the Securities Exchange Act of 1934 (''Act''),[1] and Rule 19b–4 thereunder,[2] notice is hereby given that on November 4, 2002 the New York Stock Exchange, Inc. (''Exchange'' or ''NYSE'') filed with the Securities and Exchange Commission (''Commission'' or ''SEC'') a proposed rule change (SR–NYSE–2002–59) as described in Items I, II and

[1] 15 U.S.C. 78s(b)(1).

[2] 17 CFR 240.19B–4.

III below, which Items have been prepared by the Exchange. The Commission is publishing this notice to solicit comments on the proposed rule changes from interested persons. On December 18, 2002, the NYSE submitted Amendment No. 1 to the proposal.[3]

I. Self-Regulatory Organization's Statement of the Terms of Substance of the Proposed Rule Change

The Exchange is proposing to allow its pilot programs for Mediation and Administrative Conferences (Rules 638 and 639) to expire on December 30, 2002 and adopt Rules 638 and 639 as amended. The Exchange is also proposing amendments to Rules 628 (Agreement to Arbitrate) and 630 (Uniform Arbitration Code) to reflect to the adoption of Rules 638 and 639. Proposed new language is in *italics;* proposed deletions are in [brackets].

* * * * *

NYSE Constitution and Rules

Rule 628. Agreement to Arbitrate

Article XI of the Constitution and Rules 600–[637]*639* shall be deemed a part of and be incorporated by reference in every agreement to arbitrate under the Constitution and Rules of the New York Stock Exchange, Inc.

* * * * *

Rule 630. Uniform Arbitration Code

The provisions of the Uniform Arbitration Code contained in Rules 600 to [637]*639* shall also apply to controversies between members, allied members, member firms, member organizations and/or non-members who are not [public] customers except in so far as such provisions specifically apply to matters involving [public] customers.

* * * * *

Rule 638. Mediation

(a) Mediation Pending Arbitration

(1) [A single mediation session of up to four hours will be conducted in all cases submitted for arbitration where the amount of the claim is $250,000 or more.

(2) The New York Stock Exchange will provide the parties with a mediator. The mediator's fee for the single mediation session shall be $500 and shall be paid by the New York Stock Exchange. If the parties select a mediator of their own choosing, from outside the list of proposed mediators, they shall be responsible for any difference in the mediator's fee. If the parties desire they can extend the mediation beyond the first session at their own expense.] *If the parties agree, any matter submitted for arbitration at the New York Stock Exchange is eligible to be submitted to mediation.*

(2)[(3)] Unless the parties agree on a mediator, the Director of Arbitration, upon request from the parties, will send a list of five proposed mediators together with the mediators' biographical information described in Rule 608. The parties shall have ten days to agree on a mediator from the list or choose their own mediator. If no agreement is reached, the Director of Arbitration will select a mediator from the list unless all the names on the list are objected to by the parties. In that instance, the Director of Arbitration will appoint a mediator from outside the list.

(3)[(4)] Unless otherwise agreed to by the parties, mediation shall not delay the arbitration.

(4)[(5)] The mediation shall be confidential and no record kept of the proceeding. The mediator will not be permitted to act as an arbitrator in the same case and the mediator shall not be called to testify in any proceeding regarding the mediation.

[(6) In all other matters submitted to arbitration, mediation shall be available upon the consent of the parties, at their own expense.] (b) Mediation Prior to Arbitration

(1) If the parties agree, any matter eligible for arbitration under the Constitution and Rules of the New York Stock Exchange may be mediated at the Exchange. To begin a mediation under this paragraph, the parties must file with the Exchange an agreement to mediate.

(2) At the time of filing an agreement to mediate, a party shall pay a non-refundable filing fee to the Exchange as required for the filing of an arbitration for the same amount in dispute under Rule 629 (Schedule of Fees) unless the fee is waived by the Director of Arbitration. The parties are directly responsible for the payment of the mediator's fee.

(3) If the case does not settle after mediation, the non-refundable filing fee will be applied to the non-refundable filing fee if a party elects to commence an arbitration.

* * * * *

Rule 639. Administrative Conferences

[In all cases where the amount of the claim is $250,000 or more, the parties shall attend] *Prior to the scheduling of a hearing [under Rule 607*], an administrative conference *may be scheduled at the request of a party, an arbitrator, or in the discretion of the Director of Arbitration* [with the arbitrators]. [The Director of Arbitration will schedule t]*T*he conference *will be scheduled for a date no sooner than 30 days after the request unless the parties agreed to a date that can be accommodated by the Exchange* [within 90 days after the Director serves the Statement of Claim, unless all parties request that it be scheduled later]. The Administrative Conference will be [conducted] *held* by telephone [with the chairperson presiding] [*and*] *with the arbitrator or a person appointed by the Director of Arbitration* ([*either*] *an Arbitration Counsel* [*or an arbitrator*]) [*will*] *preside during the conference.* In any claims involving a [*public*] customer, *any arbitrator appointed will be a* public arbitrator [will conduct the administrative conference,] unless the [public] customer demands, in writing, a securities arbitrator. [The chairperson shall have discretion to conduct the conference in-person and may request that all of the arbitrators attend the conference.]

At the conference, [the Arbitrator(s) may establish a schedule for discovery and the hearing, issue subpoenas and direct the appearance of witnesses, and resolve or narrow any other issue which may expedite the arbitration] *the presiding person will address procedural matters including, but not limited to, setting a schedule for discovery and the hearing as described in Rule 619 (d) or (e) as applicable.*

[Rules 638 and 639 approved on a two-year basis through December 30, 2002.]

* * * * *

II. Self-Regulatory Organization's Statement of the Purpose of, and Statutory Basis for, the Proposed Rule Change

In its filing with the Commission, the Exchange included statements concerning the purpose of and basis for the proposed rule change and discussed any comments it received on the proposed rule change. The text of these statements may be examined at the places specified in Item IV below. The Exchange has prepared summaries, set forth in Sections A, B and C below, of the most significant aspects of such statements.

A. Self-Regulatory Organization's Statement of the Purpose of, and Statutory Basis for the Proposed Rule Change

1. Purpose

The Exchange's proposed rule changes are intended to: (1) Adopt a

[3] *See* letter to Florence Harmon, Senior Special Counsel, SEC, from Darla Stuckey, Corporate Secretary, NYSE, dated December 17, 2002 (''Amendment No. 1''). In Amendment No. 1, the NYSE made technical changes to the rule text, the substance of which is incorporated into this notice.

rule for mediation that parties may agree to at their own expense (Rule 638); (2) adopt an Administrative Conference rule that provides for the scheduling of an administrative conference at the request of the parties or discretion of the arbitrator(s) or Director of Arbitration; (3) provide that the Director may appoint a staff member or arbitrator to preside at the administrative conference which is to be held via telephone conference call and limited to procedural matters (Rule 639); and (4) amend Rules 628 (Agreement to Arbitrate) and 630 (Uniform Arbitration Code) to reflect adoption of rules 638 (Mediation) and 639 (Administration Conferences).

Rules 638 (Mediation) and 639 (Administrative Conferences) were originally approved by the Commission on a 2-year pilot basis on November 19, 1998.[4] On December 29, 2000, the Commission approved amendments to the two pilot rules and granted a 2-year extension.[5]

The Exchange is proposing to allow the pilot to expire and adopt Rule 638 as amended to eliminate automatic scheduling of mediation and the Exchange's payment of $500 toward the mediator's fee. As amended, Rule 638 will provide for mediation in any case where the parties agree, and at their own expense, either before, an arbitration is filed or during the pendency or an arbitration.

The intent of the pilot mediation rule was to encourage an early resolution of disputes. The results have not been as good as anticipated. Initially, practitioners favored the pilot mediation program because it aided them in getting their clients to consider mediation, which is a process completely under the parties control. However, in 1999 only 41% of industry cases submitted for mediation settled. The percentage fell to 26% in 2000, then rose to 40% and fell to 38% respectively in 2001 and 2002. In addition, mediations involving customers, which settled at over 90% in 1999 and 2000, fell to 65% in 2001 and just barely 50% in the first half of 2002. Recently parties participating in the pilot, particularly customers, have complained that the mediation sessions are too often used as means of obtaining discovery, or the opposing party appears with little or no authority to settle.

Mediation works best when both parties are willing to negotiate and craft their own resolution rather than leaving the final determination to a third party, such as an arbitrator. Accordingly, the Exchange is proposing amending the mediation rules to provide for mediation only upon agreement of the parties and at their expense. The Exchange will continue to facilitate mediations in cases filed for arbitration without imposing any additional administrative fees. Parties who wish to mediate prior to arbitration will continue to be required to submit a filing fee, which will be credited toward the arbitration, if mediation is unsuccessful.

As a companion to the mediation pilot, the Exchange adopted, on a pilot basis, Rule 639 Administrative Conferences, with the intent of bringing parties and arbitrators together early in the process with a view toward expediting the arbitration. Originally designed for claims of $500,000 or more, Rule 639 was amended in December 2000 and the ceiling lowered to $250,000. Under the pilot, an administrative conference was automatically scheduled shortly after the answer to the statement of claim was filed.

In the time since its adoption, the administrative conference pilot proved to be useful in cases where the parties cooperated in pursuing a swift resolution of their dispute. In other cases it has become an abused process where parties have sought to use the conference to delay the process and thus defeated the original intent of the pilot.

The Exchange is proposing to allow the pilot to expire[6] and adopt Rule 639, as amended, to provide that an administrative conference will be scheduled only when requested by the parties or at the discretion of the Director of Arbitration or the arbitrator(s). The Director of Arbitration will appoint a member of the Exchange arbitration staff or an arbitrator to preside. The administrative conference will be conducted via conference call. The conference will be limited to procedural matters such as discovery and scheduling of the hearing. An arbitrator may issue an order at the conclusion of the administrative conference. If an arbitration staff member presides, he or she will assist the parties in reaching agreement on procedural issues.

The proposed amendments to Rules 628 and 630 reflect the adoption of Rules 638 and 639.

2. Statutory Basis

The Exchange believes that the proposed changes are consistent with Section 6(b)[7] of the Act,[8] in particular, in that it is designed to prevent fraudulent and manipulative acts and practices, to promote just and equitable principles by insuring that members and member organizations and the public have a fair and impartial forum for the resolution of their disputes.

B. Self-Regulatory Organization's Statement on Burden on Competition

The Exchange does not believe that the proposed rule change will impose any burden on competition that is not necessary or appropriate in furtherance of the purposes of the Act.

C. Self-Regulatory Organization's Statement on Comments on the Proposed Rule Change Received From Members, Participants or Others

The Exchange has neither solicited nor received written comments on the proposed rule change.

III. Date of Effectiveness of the Proposed Rule Change and Timing for Commission Action

Within 35 days of the date of publication of this notice in the **Federal Register** or within such longer period (i) as the Commission may designate up to a 90 days of such date if it finds such longer period to be appropriate and publishes its reasons for so finding or (ii) as to which the self-regulatory organization consents, the Commission will:

(A) By order approve the proposed rule changes, or

(B) Institute proceedings to determine whether the proposed rule changes should be disapproved.

IV. Solicitation of Comments

Interested person are invited to submit written data, views and arguments concerning the foregoing, including whether the proposed rule change is consistent with the Act. Persons making written submissions should file six (6) copies thereof with the Secretary, Securities and Exchange Commission, 450 Fifth Street, NW, Washington, DC 20549–0609. Copies of the submission, all subsequent amendments, all written statements with respect to the proposed rule change that are filed with the

[4] *See* Securities Exchange Act Release Act 34–40695 (November 19, 1998).

[5] *See* Securities Exchange Act Release No. 34–43785 (December 29, 2000).

[6] Because this proposed rule has not yet been approved, the NYSE plans to file a proposed rule change to extend the pilot until such time as SR–NYSE–2002–59 is approved by the Commission. Telephone conversation between Robert S. Clemente, Director of Arbitration, NYSE, and Florence E. Harmon, Senior Special Counsel, SEC on December 9, 2002.

[7] 15 U.S.C. 78f(b).

[8] 15 U.S.C. 78f(b)(5).

Commission, and all written communications relating to the proposed rule change between the Commission and any person, other than those that may be withheld from the public in accordance with the provisions of 5 U.S.C. 552, will be available for inspection and copying in the Commission's Public Reference Room.

Copies of the filing will also be available for inspection and copying at the principal office of the Exchange. All submissions should refer to the file number SR–NYSE–2002–59 and should be submitted by January 17, 2003.

For the Commission, by the Division of Market Regulation, pursuant to delegated authority.[9]

J. Lynn Taylor,

Assistant Secretary.

[FR Doc. 02–32738 Filed 12–26–02; 8:45 am]

BILLING CODE 8010–01–M

[9] 17 CFR 200.30–3(a)(12).

SECURITIES AND EXCHANGE COMMISSION

[Release No. 34–47024; File No. SR–NYSE–2002–37]

Self-Regulatory Organizations; New York Stock Exchange; Order Approving Proposed Rule Change and Notice of Filing and Order Granting Accelerated Approval to Amendment No. 1 Thereto by New York Stock Exchange To Amend the Exchange's Automatic Execution Facility (NYSE Direct+)

December 18, 2002.

I. Introduction

On August 29, 2002, the New York Stock Exchange (''NYSE'') filed with the Securities and Exchange Commission (''Commission''), pursuant to section 19(b)(1) of the Securities Exchange Act of 1934 (''Act'')[1] and rule 19b-4 thereunder,[2] a proposed rule change to: (i) Amend NYSE rule 13 to provide for a one-year pilot program to expand Direct+ order size eligibility for Investment Company Units, including Exchange-Traded Funds (''ETFs''), and Trust Issued Receipts, such as Holding Company Depositary Receipts (''HOLDRs''); (ii) amend NYSE rule 1002 to include Investment Company Units and Trust Issued Receipts and to provide that Investment Company Units trade until 4:15p.m.; and (iii) amend NYSE rule 1005 to reflect that the rule applies to Investment Company Units and Trust Issued Receipts. On September 20, 2002, the rule proposal was published for comment in the **Federal Register**.[3] On December 16, 2002, the NYSE filed Amendment No. 1 to the proposed rule change.[4] No comments were received on the proposed rule change. This order approves the proposed rule change and issues notice of, and grants accelerated approval to, Amendment No. 1.

[1] 15 U.S.C. 78s(b)(1).

[2] 17 CFR 240.19b-4.

II. Description of the Proposed Rule Change

NYSE Direct+ provides for the automatic execution of limit orders in a stock (''auto ex'' orders) against trading interest reflected in the Exchange's published quotation.[5] An auto ex order priced at or above the Exchange's published offer price (in the case of an auto ex order to buy), or an auto ex order priced at or below the Exchange's published bid price (in the case of an auto ex order to sell) would receive an automatic execution without being exposed to the auction market, provided the bid or offer is still available.

Currently, order size eligibility for all auto ex orders for stocks is 1099 shares or less. The Exchange is proposing to expand the size of orders eligible for automatic execution under NYSE Direct+ to a maximum of 10,000 shares for two Exchange products. These are Investment Company Units (as defined in paragraph 703.16 of the Listed Company Manual), including ETFs, and Trust Issued Receipts (such as HOLDRs), which are defined in NYSE rule 1200. The Exchange believes that the increase in the number of shares eligible for automatic execution for Investment Company Units and Trust Issued Receipts will serve to attract additional order flow to NYSE Direct+. The expanded order size would be phased in as a pilot program, with order size raised on a gradual, ''stair step'' basis to a maximum of 10,000 shares as experience is gained. The proposed pilot program time period would expire on December 23, 2003.[6]

The NYSE believes that that the appropriate level to start accepting Direct + orders under this proposed rule change will be between 2,500 and 5,000 shares. Subsequent increases in the order eligibility levels will be made after experience is gained with trading at the initial level and at each subsequent level.[7]

To implement the proposed pilot program, the Exchange is modifying NYSE rule 13 to codify the pilot program; amending NYSE rule 1002 to permit orders in Investment Company Units and Trust Issued Receipts to be executed via NYSE Direct + and to provide that orders in Investment Company Units trade until 4:15 p.m.; and modifying NYSE rule 1005 to apply the requirement in the rule of auto ex order entry for the same customer in the same stock at time intervals of no less than 30 seconds between entry of each order, to Investment Company Units and Trust Issued Receipts.

III. Solicitation of Comments

Interested persons are invited to submit written data, views, and arguments concerning Amendment No. 1, including whether Amendment No. 1 is consistent with the Act. Persons making written submissions should file six copies thereof with the Secretary, Securities and Exchange Commission, 450 Fifth Street, NW., Washington, DC 20549–0609. Copies of the submission, all subsequent amendments, all written statements with respect to the proposed rule change that are filed with the Commission, and all written communications relating to the proposed rule change between the Commission and any person, other than those that may be withheld from the public in accordance with the provisions of 5 U.S.C. 552, will be available for inspection and copying in the Commission's Public Reference Room. Copies of such filing also will be available for inspection and copying at the principal office of the NYSE. All submissions should refer to File No. SR-

[3] *See* Securities Exchange Act Release No. 45816 (April 24, 2002), 67 FR 30406.

[4] *See* letter from Darla C. Stuckey, Corporate Secretary, NYSE, to Nancy Sanow, Assistant Director, Division of Market Regulation, Commission, dated December 12, 2002 (''Amendment No. 1''). In Amendment No. 1, the Exchange: (1) provided detailed information about the standards that would be employed to determine whether to increase Direct+ order size and (2) amended rule 13 to specify that the pilot program for increased order size eligibility for Direct+ orders in Investment Company Units and Trust Issued Receipts will run until December 23, 2003.

[5] NYSE Direct+ was originally filed as a one-year pilot. It was approved in Securities Exchange Act Release No. 43767 (December 22, 2000), 66 FR 834 (January 4, 2001). The pilot was subsequently extended for an additional year by SR–NYSE–2001–50 and approved by Securities Exchange Act Release No. 45331 (January 24, 2002), 67 FR 5024 (February 1, 2002). The pilot was recently extended until December 23, 2003. *See* Securities Exchange Act Release No. 34–46906 (November 25, 2002), 67 FR 72260 (December 4, 2002).

[6] *See* Amendment No. 1, *supra* note 4.

[7] The NYSE will consider the ability of the specialist to maintain a fair and orderly market in Investment Company Units or Trust Issued Receipts with the increased Direct+ order size and the operational impact, if any resulting from the increased order size eligibility. The NYSE has also provided that an increase in order size eligibility will be preceded by at least a one-week notice to the membership before implementation. *See* Amendment No. 1, *supra* note 4.

NYSE–2002–37 and should be submitted by January 17, 2003.

IV. Discussion

After careful review, the Commission finds that the proposed rule change, as amended, is consistent with the requirements of the Act and the rules and regulations thereunder applicable to a national securities exchange.[8] Specifically, the Commission believes the proposed rule change is consistent with section 6(b)(5) of the Act,[9] which requires among other things, that the rules of the Exchange are designed to prevent fraudulent and manipulative acts and practices, to promote just and equitable principles of trade, to foster cooperation and coordination with persons engaged in regulating, clearing, settling, processing information with respect to, and facilitating transactions in securities, to remove impediments to perfect the mechanism of a free and open market and national market system, and in general to protect investors and the public interest. The Commission believes that including Investment Company Units and Trust Issued Receipts in the Direct + pilot is a reasonable expansion of the Direct + pilot. The Commission believes that this allows customers who value speed and certainty of automatic executions to participate in Direct +. The Commission also believes that the expansion of the maximum order size for these products is reasonably designed to permit the exchange to attract additional order flow and potentially increase the depth and liquidity of the exchange's market to the benefit of investors.

The Commission finds good cause for accelerating approval of Amendment No. 1 because it merely clarifies the standard the NYSE would use in determining whether to increase the Direct + order size, coordinates the pilot termination date with the date of the NYSE Direct + pilot, and makes no substantive changes to the proposal. Accordingly, pursuant to section 19(b)(2) of the Act,[10] the Commission finds good cause to approve Amendment No. 1 prior to the thirtieth day after notice of the Amendment is published in the **Federal Register**.

V. Conclusion

It is therefore ordered, pursuant to section 19(b)(2) of the Act,[11] that the proposed rule change (SR-NYSE–2002–37) is approved, and Amendment No. 1 is approved on an accelerated basis.

For the Commission, by the Division of Market Regulation, pursuant to delegated authority.[12]

J. Lynn Taylor,

Assistant Secretary.

[FR Doc. 02–32797 Filed 12–26–02; 8:45 am]

BILLING CODE 8010–01–P

[8] The Commission has considered the proposed rules' impact on efficiency, competition and capital formation. 15 U.S.C. 78c(f).

[9] 15 U.S.C. 78f(b)(5).

[10] 15 U.S.C. 78s(b)(2).

[11] *Id.*

[12] 17 CFR 200.30–3(a)(12).

SECURITIES AND EXCHANGE COMMISSION

[Release No. 34–47018; File No. SR–OC–2002–03]

Self-Regulatory Organizations; Notice of Filing and Immediate Effectiveness of Proposed Rule Change by OneChicago, LLC Relating to Block Trades

December 18, 2002.

Pursuant to section 19(b)(7) of the Securities Exchange Act of 1934 (''Act''),[1] and Rule 19b–7 under the Act,[2] notice is hereby given that on November 7, 2002, OneChicago, LLC (''OneChicago'') filed with the Securities and Exchange Commission (''SEC'' or ''Commission'') the proposed rule change described in Items I and II below, which Items have been prepared by OneChicago. On December 12, 2002, OneChicago filed Amendment No. 1 to the proposed rule change.[3] The Commission is publishing this notice to solicit comments on the proposed rule change from interested persons. OneChicago also filed the proposed rule change with the Commodity Futures Trading Commission (''CFTC''). OneChicago filed written certifications with the CFTC under Section 5c(c) of the Commodity Exchange Act[4] on November 6, 2002 and December 12, 2002.

I. Self-Regulatory Organization's Description of the Proposed Rule Change

OneChicago is proposing to amend OneChicago Rule 417, relating to block trades, in the following respects: (i) Paragraph (c) is amended to provide that the parties to a block trade must report specified information regarding such trade to OneChicago ''without delay,'' rather than ''promptly''; (ii) paragraph (d) is amended to add that clearing members and, if applicable, exchange members and access persons (as such terms are defined in the OneChicago rulebook) may execute orders for a non-discretionary customer account by means of a block trade only if the relevant customer has previously consented thereto; and (iii) paragraphs (e) and (f) are amended to clarify that a natural person who is associated with a clearing member, exchange member or access person is restricted from engaging in transactions for any account that he or she controls when he or she has knowledge of a pending block trade of the clearing member, exchange member or access person with which he or she is associated.

II. Self-Regulatory Organization's Statement of the Purpose of, and Statutory Basis for, the Proposed Rule Change

OneChicago has prepared statements concerning the purpose of, and statutory basis for, the proposed rule, burdens on competition, and comments received from members, participants, and others. The text of these statements may be examined at the places specified in Item IV below. These statements are set forth in Sections A, B, and C below.

A. Self-Regulatory Organization's Statement of the Purpose of, and Statutory Basis for, the Proposed Rule Change

1. Purpose

The proposed rule change is designed to: (i) Clarify the timeframe within which information related to a block trade must be reported: (ii) make it clear that clearing members, exchange members and access persons must obtain a customer's consent prior to executing orders for a non-discretionary account by means of a block trade; and (iii) apply the restrictions on engaging in certain transactions related to a block trade to natural persons associated with a clearing member, exchange member or access person, and to clarify that the restriction on trading extends to any account that such natural person controls.

The proposed change to paragraph (c) of OneChicago Rule 417 is meant to remove any ambiguity with respect to the timeframe within which market participants are required to report information related to block trades. OneChicago believes that obligating market participants to report block trades ''without delay'' is warranted by the important price discovery function that it expects its markets for security futures products will serve. Given that all trading on OneChicago will be conducted electronically, OneChicago

[1] 15 U.S.C. 78s(b)(7).

[2] 17 CFR 240.19b–7.

[3] *See* letter dated December 12, 2002 from C. Robert Paul, General Counsel, OneChicago, to Division of Market Regulation, Commission.

[4] 7 U.S.C. 7a–2(c).

does not foresee that market participants will encounter practical difficulties in complying with this strict reporting requirement.

The proposed change to paragraph (d) is intended to protect customers with non-discretionary accounts by making it clear that the clearing members, exchange members and access persons maintaining such accounts must obtain their customers' consent prior to executing customer orders by means of a block trade. OneChicago believes that customer protection in this area is warranted because block trades may be executed at prices that differ from those prevailing in the corresponding contract markets at the time.

The proposed changes to paragraphs (e) and (f) of OneChicago Rule 417 are intended to clarify that the restrictions on engaging in certain transactions related to a block trade prohibit all natural persons associated with market participants, including access persons, from taking advantage of non-public information with respect to a block trade, by entering orders for execution through OneChicago for any account that he or she controls if such orders relate to the same underlying securities as the block trade in question.

2. Statutory Basis

OneChicago has filed this proposed rule change pursuant to section 19(b)(7) of the Act.[5] OneChicago believes that the proposed rule change is authorized by, and consistent with, section 6(b)(5)[6] of the Act because it is designed to prevent fraudulent and manipulative acts and practices and to promote just and equitable principles of trade.

B. Self-Regulatory Organization's Statement on Burden on Competition

OneChicago believes that the proposed rule change is inherently pro-competitive as it is designed to ensure that: (i) Relevant market information becomes available to the public as expeditiously as possible; (ii) customers with non-discretionary accounts are protected from unauthorized block trades; and (iii) natural persons associated with market participants are prevented from taking advantage of any non-public information with respect to block trades.

C. Self-Regulatory Organization's Statement on Comments on Proposed Rule Change Received From Members, Participants, or Others

Comments on the proposed rule change have not been solicited.

[5] 15 U.S.C. 78s(b)(7).

[6] 15 U.S.C. 78f(b)(5).

III. Date of Effectiveness of the Proposed Rules and Timing for Commission Action

Pursuant to section 19(b)(7)(B) of the Act,[7] the proposed rule change, as filed with the Commission on November 7, 2002, became effective on that date. Amendment No. 1 to the proposed rule change became effective on December 13, 2002. Within 60 days of the date of effectiveness of the proposed rule change, the Commission, after consultation with the CFTC, may summarily abrogate the proposed rule change and require that the proposed rule change be refiled in accordance with the provisions of section 19(b)(1) of the Act.[8]

IV. Solicitation of Comments

Interested persons are invited to submit written data, views, and arguments concerning the foregoing, including whether the proposed rules conflict with the Act. Persons making written submissions should file nine copies of the submission with the Secretary, Securities and Exchange Commission, 450 Fifth Street, NW., Washington, DC 20549–0609. Comments also may be submitted electronically to the following e-mail address: *rule-comments@sec.gov.* Copies of the submission, all subsequent amendments, all written statements with respect to the proposed rules that are filed with the Commission, and all written communications relating to the proposed rules between the Commission and any person, other than those that may be withheld from the public in accordance with the provisions of 5 U.S.C. 552, will be available for inspection and copying in the Commission's Public Reference Room. Copies of these filings will also be available for inspection and copying at the principal office of OneChicago. Electronically submitted comments will be posted on the Commission's internet Web site (*http://www.sec.gov*). All submissions should refer to File No. SR–OC–2002–03 and should be submitted by January 17, 2003.

For the Commission, by the Division of Market Regulation, pursuant to delegated authority.[9]

J. Lynn Taylor,

Assistant Secretary.

[FR Doc. 02–32642 Filed 12–26–02; 8:45 am]

BILLING CODE 8010–01–P

[7] 15 U.S.C. 78s(b)(7)(B).

[8] 15 U.S.C. 78s(b)(1).

[9] 17 CFR 200.30–3(a)(75).

SECURITIES AND EXCHANGE COMMISSION

[Release No. 34–47036; File No. SR–PCX–2002–53]

Self-Regulatory Organizations; Pacific Exchange, Inc.; Order Approving Proposed Rule Change Relating to New Order Types

December 19, 2002.

I. Introduction

On August 5, 2002, the Pacific Exchange, Inc. (''PCX'' or ''Exchange'') filed with the Securities and Exchange Commission (''Commission''), pursuant to Section 19(b)(1) of the Securities Exchange Act of 1934 (''Act'')[1] and Rule 19b–4 thereunder,[2] a proposed rule change regarding new order types. On September 26, 2002, the Exchange's rule proposal was published for comment in the **Federal Register**.[3] The Commission received no comment letters on the proposal. This order approves the proposed rule change.

II. Description of the Proposed Rule Change

PCX, through its wholly-owned subsidiary PCX Equities, Inc. (''PCXE''), proposes to amend its rules governing the Archipelago Exchange (''ArcaEx''), the equities trading facility of PCXE, to: (i) Adopt two new order types—a Midpoint Crossing Order and a Midpoint Directed Fill; and (ii) add minimum trading differentials for these new order types separate from other orders types.

The two new order types would allow Equity Trading Permit (''ETP'') Holders and Sponsored Participants (collectively ''Users'') to receive executions priced between the national best bid and offer (''NBBO'') at price increments finer than the minimum trading differential permitted under the Exchange's current rules.

A Midpoint Cross Order would be a Cross Order[4] that is priced at the midpoint of the NBBO. If at the time of order entry a locked or crossed market exists in the security, the ArcaEx trading system would reject the Midpoint Cross Order. A Midpoint Directed Fill would be a Directed Fill[5] that is priced at the

[1] 15 U.S.C. 78s(b)(1).

[2] 17 CFR 240.19b–4.

[3] *See* Securities Exchange Act Release No. 46515 (September 19, 2002), 67 FR 60709.

[4] A Cross Order is defined as a two-sided order with instructions to match the identified buy-side with the identified sell-side at a specified price (the cross price), subject to price improvement requirements. *See* PCXE Rule 7.31(s).

[5] *See* PCXE Rule 7.31(j) (definition of ''Directed Fill'').

midpoint of the NBBO. When a locked or crossed market exists in the security, the inbound Directed Order would bypass the Directed Order Process [6] and immediately enter the Display Order Process for execution.[7] In the Directed Order Process, the User's Directed Order would be executed against a Directed Fill, which is the order of the User's designated market maker. Specifically, for a market maker to interact with incoming Directed Orders, the market maker must submit a standing instruction to ArcaEx for the parameters of a Directed Fill, including, but not limited to, the size of the order, the Users who may send such market maker a Directed Order, the price improvement algorithm and the period of time the instruction is effective. The proposed Midpoint Directed Fill would be an additional feature of the ArcaEx system's price improvement algorithm, which would enable market makers to match automatically against incoming Directed Orders at the midpoint price between the NBBO.

The Exchange's current minimum price variation for securities traded on the ArcaEx is $0.01. The minimum price improvement increment (''MPII'') on ArcaEx is equal to $0.01 or ten percent of the NBBO spread, whichever is greater.[8] Under the proposal, Midpoint Cross Orders and Midpoint Directed Fills could receive executions at price increments finer than the minimum trading differential currently permitted under the Exchange's rules. In order to implement these new order types, the Exchange proposes to add interpretive language to address situations where the midpoint of the NBBO bid/ask differential is a subpenny price (*e.g.*, the midpoint of an NBBO of $20—$20.03 is $20.015). In such circumstances, the proposed rule would permit Midpoint Cross Orders and Midpoint Directed Fills to be executed and reported in increments as small as one-half of the minimum price variation (*i.e.*, as $0.005).[9] Furthermore, in situations where the NBBO bid/ask differential is one minimum price variation (*i.e.*, $0.01), Midpoint Cross Orders and Midpoint Directed Fills may be executed in increments of one-half of the minimum price variation (*i.e.*, as $0.005), as an exception to the current MPII. In addition, the Exchange proposes minor technical changes to eliminate obsolete references and to change the text so that Rule 7.6(a), Commentary .05 would conform to Rule 7.6(a), Commentary .03.

III. Discussion

After careful review, the Commission finds that the proposed rule change is consistent with the requirements of the Act and the rules and regulations thereunder applicable to a national securities exchange [10] and, in particular, the requirements of Section 6 of the Act.[11] Further, the Commission finds that the proposal is consistent with Section 6(b)(5) of the Act,[12] in that the rules have been designed to remove impediments to and to perfect the mechanism of a free and open market and a national market system, while also protecting investors and the public interest.

IV. Conclusion

It is therfore ordered, pursuant to Section 19(b)(2) of the Act,[13] that the proposed rule change (File No. SR–PCX–2002–53), is hereby approved.

For the Commission, by the Division of Market Regulation, pursuant to delegated authority.[14]

J. Lynn Taylor,

Assistant Secretary.

[FR Doc. 02–32644 Filed 12–26–02; 8:45 am]

BILLING CODE 8010–01–P

[6] The Directed Order Process is the first step in the ArcaEx execution algorithm. Through this Process, Users may direct an order to a Market Maker with whom that they have a relationship and the Market Maker may execute the order. To access this process, the User must submit a Directed Order, which is a market or limit order to buy or sell that has been directed to the a particular market maker by the User. *See* PCXE Rule 7.37(a) (description of ''Directed Order Process'').

[7] The Display Order Process is the second step in the ArcaEx execution algorithm. In this process, the ArcaEx system matches an incoming marketable order against orders in the Display Order Process at the display price of the resident order for the total size available at the that price or for the size of the incoming order. *See* PCXE Rule 7.37(b) (description of ''Display Order Process'').

[8] *See* PCXE Rule 7.6(a), Commentary .06. Under current PCXE rules, the MPII requirements must be satisfied in the execution of Cross Orders and Directed Orders. *See* PCXE Rules 7.31(j) and (s).

[9] *See* proposed PCXE Rule 7.6(a), Commentary .07.

[10] The Commission has considered the proposal's impact on efficiency, competition and capital formation. 15 U.S.C. 78c(f).

[11] 15 U.S.C. 78f.

[12] 15 U.S.C. 78f(b)(5).

[13] *Id.*

[14] 17 CFR 200.30–3(a)(12).

SECURITIES AND EXCHANGE COMMISSION

[Release No. 34–47065; File No. SR–PCX–2002–72]

Self-Regulatory Organizations; Notice of Filing and Immediate Effectiveness of Proposed Rule Change by the Pacific Exchange, Inc. Relating to Changes in Marketing Fees

December 20, 2002.

Pursuant to Section 19(b)(1) of the Securities Exchange Act of 1934 (''Act'') [1] and Rule 19b–4 thereunder,[2] notice is hereby given that on November 25, 2002, the Pacific Exchange, Inc. (''PCX'') filed with the Securities and Exchange Commission (''Commission'') the proposed rule change as described in Items I, II and III below, which Items have been prepared by the PCX. The Commission is publishing this notice to solicit comments on the proposed rule change from interested persons.

I. Self-Regulatory Organization's Statement of the Terms of Substance of the Proposed Rule Change

The PCX is proposing to change its marketing fee for certain options and to adopt new marketing fees for recently listed options. The text of the proposed change is available at the PCX and at the Commission.

II. Self-Regulatory Organization's Statement of the Purpose of, and Statutory Basis for, the Proposed Rule Change

In its filing with the Commission, the PCX included statements concerning the purpose of and basis for the proposed rule change and discussed any comments it received on the proposed rule change. The text of these statements may be examined at the places specified in Item IV below. The PCX has prepared summaries, set forth in sections A, B, and C below, of the most significant aspects of such statements.

A. Self-Regulatory Organization's Statement of the Purpose of, and Statutory Basis for, the Proposed Rule Change

Purpose

The PCX recently adopted a payment-for-order-flow program under which it charges a marketing fee ranging from $0 to $1.00 per contract on a per-issue basis.[3] The PCX segregates the funds from this fee by trading post and makes

[1] 15 U.S.C. 78s(b)(1).

[2] 17 CFR 240.19b–4.

[3] *See* Securities Exchange Act Release No. 44830 (September 21, 2001), 66 FR 49728 (September 28, 2001) (SR–PCX–2001–37).

the funds available to LMMs for their use in attracting orders in the options traded at the posts. The PCX charges the marketing fees as set forth in the Schedule of Rates.

The PCX is proposing to change the marketing fee for certain options as set forth in the Schedule of Rates beginning at the commencement of the December trade month and continuing until further notice. The PCX proposes to change only the amounts of the fees that it charges for transactions in the options that are included in the proposed Schedule of Rates. Any fees currently being charged for transactions in options that are not listed in this change to the Schedule of Rates would not be affected by the proposed rule change. The PCX believes that its proposed rule change is reasonable and equitable because it is designed to enable the PCX to compete with other markets in attracting options business. Only the amount of the fee is being changed.

Basis

The PCX believes that the proposal is consistent with Section 6(b) of the Act,[4] particularly Section 6(b)(4) of the Act,[5] in that it provides for the equitable allocation of reasonable dues, fees and other charges among its members.

B. Self-Regulatory Organization's Statement on Burden on Competition

The PCX does not believe that the proposed rule change will impose any burden on competition that is not necessary or appropriate in furtherance of the purposes of the Act.

C. Self-Regulatory Organization's Statement on Comments on the Proposed Rule Change Received From Members, Participants, or Others

The PCX neither solicited nor received written comments on the proposed rule change.

III. Date of Effectiveness of the Proposed Rule Change and Timing for Commission Action

The foregoing rule change has become immediately effective pursuant to Section 19(b)(3)(A) of the Act[6] and Rule 19b–4(f) thereunder[7] because it changes the PCX fee schedule. At any time within 60 days after the filing of such proposed rule change, the Commission may summarily abrogate such rule change if it appears to the Commission that such action is necessary or appropriate in the public interest, for the protection of investors, or otherwise in furtherance of the purposes of the Act.

IV. Solicitation of Comments

Interested persons are invited to submit written data, views and arguments concerning the foregoing, including whether the proposal is consistent with the Act. Persons making written submissions should file six copies thereof with the Secretary, Securities and Exchange Commission, 450 Fifth Street, NW, Washington, DC 20549–0609. Copies of the submission, all subsequent amendments, all written statements with respect to the proposed rule change that are filed with the Commission, and all written communications relating to the proposed rule change between the Commission and any person, other than those that may be withheld from the public in accordance with the provisions of 5 U.S.C. 552, will be available for inspection and copying in the Commission's Public Reference Room. Copies of such filing will also be available for inspection and copying at the principal office of the PCX. All submissions should refer to File No. SR–PCX–2002–72 and should be submitted by January 17, 2003.

For the Commission, by the Division of Market Regulation, pursuant to delegated authority.[8]

Margaret H. McFarland,

Deputy Secretary.

[FR Doc. 02–32792 Filed 12–26–02; 8:45 am]

BILLING CODE 8010–01–P

[4] 15 U.S.C. 78f(b).

[5] 15 U.S.C. 78f(b)(4).

[6] 615 U.S.C. 78s(b)(3)(A).

[7] 17 CFR 240.19b–4.

[8] 17 CFR 200.30–3(a)(12).

SECURITIES AND EXCHANGE COMMISSION

[Release No. 34–47059; File No. SR–Phlx–2002–11]

Self-Regulatory Organizations; Order Approving a Proposed Rule Change and Amendment No. 1 Thereto by the Philadelphia Stock Exchange, Inc. Proposing To Amend Phlx Rule 201A(b), Alternate Specialist Assignment

December 20, 2002.

I. Introduction

On February 11, 2002, the Philadelphia Stock Exchange, Inc. (''Phlx'' or ''Exchange'') filed with the Securities and Exchange Commission (''SEC'' or ''Commission''), pursuant to Section 19(b)(1) of the Securities Exchange Act of 1934 (''Act''),[1] and Rule 19b–4 thereunder,[2] a proposed rule change to amend Phlx Rule 201A(b), Alternate Specialist Assignment, to delete restrictions on members, member organizations and persons affiliated with member organizations from acting as an alternate specialist while that member, member organization or person affiliated with member organization is either a specialist in the options overlying the equity issue or a Registered Options Trader (''ROT'') with an assignment in the overlying options. The Exchange filed Amendment No. 1 to the proposed rule change on September 10, 2002.[3] The proposed rule change, as amended, was published for comment in the **Federal Register** on November 7, 2002.[4] The Commission received no comment letters on the proposed rule change. This order approves the proposed rule change, as amended.

After careful review, the Commission finds that the proposed rule change, as amended, is consistent with the requirements of the Act and the rules and regulations thereunder applicable to a national securities exchange.[5] In particular, the Commission finds that the proposed rule change to eliminate the restriction on an alternate specialist being affiliated with a specialist or ROT in the overlying option is consistent with Section 6(b)(5) of the Act,[6] which requires, among other things, that the rules of an exchange be designed to promote just and equitable principles of trade and to remove impediments to and perfect the mechanism of a free and open market.

The Exchange's rules do not restrict a Phlx primary equity specialist from being affiliated with a specialist or ROT trade in the overlying option. The Commission does not believe that such a restriction is necessary for alternate specialists. The Commission also believes that the potential for manipulative or other improper trading activity is minimized by the physical separation of the Exchange's options and equity trading floors. Further, the Commission notes that the Exchange's Market Surveillance and Examinations Departments will continue to monitor and surveil for improper trading activity.

[1] 15 U.S.C. 78s(b)(1).

[2] 17 CFR 240.19b–4.

[3] On September 10, 2002, the Exchange filed a Form 19b–4, which replaced the original filing in its entirety (''Amendment No. 1'').

[4] *See* Securities Exchange Act Release No. 46758 (October 31, 2002), 67 FR 67885.

[5] In approving this proposed rule change, the Commission has considered the proposed rule's impact on efficiency, competition, and capital formation. 15 U.S.C. 78c(f).

[6] 15 U.S.C. 78f(b)(5).

II. Conclusion

For the foregoing reasons, the Commission finds that the proposed rule change, as amended, is consistent with the requirements of the Act and rules and regulations thereunder.

It is therefore ordered, pursuant to Section 19(b)(2) of the Act,[7] that the proposed rule change (SR–Phlx–2002–11), as amended, is approved.

For the Commission, by the Division of Market Regulation, pursuant to delegated authority.[8]

Margaret H. McFarland,

Deputy Secretary.

[FR Doc. 02–32793 Filed 12–26–02; 8:45 am]

BILLING CODE 8010–01–P

SECURITIES AND EXCHANGE COMMISSION

[Release No. 34–47062; File No. SR–Phlx–2002–67]

Self-Regulatory Organizations; Notice of Filing of Proposed Rule Change by the Philadelphia Stock Exchange, Inc. Regarding Rules Implementing the Options Intermarket Linkage Plan

December 20, 2002.

Pursuant to section 19(b)(1) of the Securities Exchange Act of 1934 (''Act'')[1] and rule 19b–4 thereunder,[2] notice is hereby given that on October 29, 2002, the Philadelphia Stock Exchange, Inc. (''Phlx'' or ''Exchange'') filed with the Securities and Exchange Commission (''Commission'') the proposed rule change as described in items I, II, and III below, which items have been prepared by the Exchange. The Commission is publishing this notice to solicit comments on the proposed rule change from interested persons.

I. Self-Regulatory Organization's Statement of the Terms of Substance of the Proposed Rule Change

The Phlx proposes to adopt rules (''rules'') implementing the Plan for the Purpose of Creating and Operating an Intermarket Options Linkage (''Plan'').[3] The Exchange previously filed proposed rules adopting the Plan on August 16, 2001.[4] Below is the text of the proposed rule change; proposed new text is italicized.

Intermarket Linkage

Definitions

Rule 1083. The following terms shall have the meaning specified in this rule solely for the purpose of rules 1083 through 1087:

(a) ''Aggrieved Party'' means a member of a Participant Exchange whose bid or offer was traded-through.

(b) ''Block Trade'' means a trade on a Participant Exchange that:

(i) Involves 500 or more contracts and has a premium value of at least $150,000;

(ii) Is effected at a price outside of the NBBO; and

(iii) Involves either:

(A) A cross (where a member of the Participant Exchange represents all or a portion of both sides of the trade), or

(B) Any other transaction (i.e., in which such member represents an order of block size on one side of the transaction only) that is not the result of an execution at the current bid or offer on the Participant Exchange.

Contemporaneous transactions at the same price on a Participant Exchange shall be considered a single transaction for the purpose of this definition.

(c) ''Complex Trade'' means the execution of an order in an options series in conjunction with the execution of one or more related orders(s) in different options series in the same underlying security occurring at or near the same time for the equivalent number of contracts and for the purpose of executing a particular investment strategy.

(d) ''Crossed Market'' means a quotation in which the Exchange disseminates a bid (offer) in a series of an Eligible Option Class at a price that is greater than (is less than) the price of the offer (bid) for the series then being displayed from another Participant Exchange.

(e) ''Eligible Market Maker,'' with respect to an Eligible Option Class, means a specialist or ROT that:

(i) Is assigned to, and is providing two-sided quotations in, the Eligible Option Class;

(ii) Is in compliance with the requirements of rule 1087;

(iii) Is participating in the Exchange's AUTOM system (logged onto the Exchange's ''Wheel'') in such Eligible Option Class;

(iv) Has a clearing arrangement with a clearing firm that is a member of the exchange to which such specialist or ROT sends a Linkage Order (as defined below).

(f) ''Eligible Option Class'' means all option series overlying a security (as that term is defined in section 3(a)(10) of the Exchange Act) or group of securities, including both put options and call options, which class is traded on the Exchange and at least one other Participant Exchange.

(g) ''Firm Customer Quote Size'' with respect to a P/A Order means the lesser of (a) the number of option contracts that the Participant Exchange sending a P/A Order guarantees it will automatically execute at its disseminated price in a series of an Eligible Option Class for Public Customer orders entered directly for execution in that market; or (b) the number of option contracts that the Participant Exchange receiving a P/A Order guarantees it will automatically execute at its disseminated price in a series of an Eligible Option Class for Public Customer orders entered directly for execution in that market. This number shall be at least 10.

(h) ''Firm Principal Quote Size'' means the number of options contracts that a Participant Exchange guarantees it will execute at its disseminated price for incoming Principal Orders in an Eligible Option Class. This number shall be at least 10.

(i) ''Linkage'' means the systems and data communications network that link electronically the Participant Exchanges for the purposes specified in the Plan.

(j) ''Linkage Order'' means an order routed through the Linkage as permitted under the Plan. There are three types of Linkage Orders:

(i) ''Principal Acting as Agent (''P/A'') Order,'' which is an order for the principal account of a specialist (or equivalent entity on another Participant Exchange that is authorized to represent Public Customer orders), reflecting the terms of a related unexecuted Public Customer order for which the specialist is acting as agent;

(ii) ''Principal Order,'' which is an order for the principal account of an Eligible Market Maker and is not a P/A Order; and

(iii) ''Satisfaction Order,'' which is an order, for the principal account of a member who initiated a Trade-Through, sent through the Linkage to satisfy the liability arising from that Trade-Through.

(k) ''Locked Market'' means a quotation in which the Exchange disseminates a bid (offer) in a series of an Eligible Option Class at a price that

---

[7] 15 U.S.C. 78s(b)(2).

[8] 17 CFR 200.30–3(a)(12).

[1] 15 U.S.C. 78s(b)(1).

[2] 17 CFR 240.19b–4.

[3] Securities Exchange Act Release Nos. 43086 (July 28, 2000), 65 FR 48023 (August 4, 2000) (approving the Plan), 43573 (November 16, 2000), 65 FR 70851 (November 28, 2000) (approving Phlx joining the Plan); and 44482 (June 27, 2001), 66 FR 35470 (July 5, 2001) (approving amendment to Plan to conform to the requirements of rule 11Ac1–7 (''Amendment'')).

[4] *See* SR–Phlx–2001–78, which has been withdrawn. The instant proposal is intended to replace the previous filing and amendment(s) in their entirety.

equals the price of the offer (bid) for the series then being displayed from another Participant Exchange.

(l) ''NBBO'' means the national best bid and offer in an options series as calculated by the Exchange.

(m) ''Non-Firm'' means, with respect to quotations, that members of a Participant Exchange are relieved of their obligation to be firm for their quotations pursuant to Rule 11Ac1–1 under the Exchange Act.

(n) ''Participant Exchange'' means a registered national securities exchange that is a party to the Plan.

(o) ''Plan'' means the Plan for the Purpose of Creating and Operating an Intermarket Option Linkage, as such plan may be amended from time to time.

(p) ''Public Customer'' for purposes of these rules concerning Linkage, means a person that is neither a broker or dealer in securities nor an affiliate of a broker or dealer in securities.

(q) ''Reference Price'' means the limit price attached to a Linkage Order by the sending Participant Exchange. Except with respect to a Satisfaction Order, the Reference Price is equal to the bid disseminated by the receiving Participant Exchange at the time that the Linkage Order is transmitted in the case of a Linkage Order to sell and the offer disseminated by the receiving Participant Exchange at the time that the Linkage Order is transmitted in the case of a Linkage Order to buy. With respect to a Satisfaction Order, the Reference Price is the price that the member in the sending Participant Exchange is entitled to receive in satisfaction of a Trade-Through complaint under the Plan.

(r) ''Trade-Through'' means a transaction in an options series at a price that is inferior to the NBBO.

(s) ''Third Participating Market Center Trade-Through'' means a Trade-Through in a series of an Eligible Option Class that is effected by executing a Linkage Order, and such execution results in a sale (purchase) at a price that is inferior to the best bid (offer) being disseminated by another Participant Exchange.

(t) ''Verifiable Number of Customer Contracts'' means the number of Public Customer contracts in the book of a Participant Exchange.

Operation of the Linkage

Rule 1084. By subscribing to the Plan, the Exchange has agreed to comply with, and enforce compliance by its members with, the Plan. In this regard, the following shall apply:

(a) Pricing. Members may send P/A Orders and Principal Orders through the Linkage only if such orders are priced at the NBBO.

(b) P/A Orders.

(1) Sending of P/A Orders for Sizes No Larger than the Firm Customer Quote Size. A specialist may send through the Linkage a P/A Order for execution in the automatic execution system of a Participant Exchange if the size of such P/A Order is no larger than the Firm Customer Quote Size. Except as provided in subparagraph (b)(2)(ii) below, a specialist may not break up an order of a Public Customer that is larger than the Firm Customer Quote Size into multiple P/A Orders, one or more of which is equal to or smaller than the Firm Customer Quote Size, so that such orders could be represented as multiple P/A Orders through the Linkage.

(2) Sending of P/A Orders for Sizes Larger than the Firm Customer Quote Size. If the size of a P/A Order is larger than the Firm Customer Quote Size, a specialist may send through the Linkage such P/A Order in one of two ways:

(i) The specialist may send a P/A Order representing the entire Public Customer order. If the receiving Participant Exchange's disseminated price is equal to or better than the Reference Price when the P/A Order arrives at that market, that exchange will execute the P/A Order at its disseminated price for at least the Firm Customer Quote Size. Within 15 seconds of receipt of such order, the receiving Participant Exchange will inform the specialist of the amount of the order executed and the amount, if any, that was canceled.

(ii) Alternatively, the specialist may send an initial P/A Order for the Firm Customer Quote Size pursuant to subparagraph (b)(1) above. If the Participant Exchange executes the P/A Order and continues to disseminate the same price at the NBBO 15 seconds after reporting the execution of the initial P/A Order, the specialist may send an additional P/A Order to the same Participant Exchange. If sent, such additional P/A Order must be for at least the lesser of 100 contracts or the entire remainder of the Public Customer order.

In any situation where a receiving Participant Exchange does not execute a P/A Order in full, such exchange is required to move its quotation to a price inferior to the Reference Price of the P/A Order.

(c) Principal Orders.

(1) Sending of an Initial Principal Order. An Eligible Market Maker may send a Principal Order through the Linkage at a price equal to the NBBO. Subject to the next paragraph, if the Principal Order is not larger than the Firm Principal Quote Size, the receiving Participant Exchange will execute the order in its automatic execution system, if available, if its disseminated price is equal to or better than the price specified in the Principal Order when that order arrives at the receiving Participant Exchange. If the Principal Order is larger than the Firm Principal Quote Size, the receiving Participant will (a) execute the Principal order at its disseminated price for at least the Firm Principal Quote Size and (b) within 15 seconds of receipt of such order, reply to the sending Participant Exchange, informing such Participant Exchange of the amount of the order that was executed and the amount, if any, canceled. If the receiving Participant Exchange does not execute the Principal Order in full, it will move its quote to a price inferior to the Reference Price of the Principal Order.

(2) Receipt of Multiple Principal Orders. Once the Exchange provides an automatic execution of a Principal Order in a series of an Eligible Option Class (the ''initial execution''), the Exchange may reject any Principal Order(s) in the same Eligible Option Class sent by the same Participant Exchange for 15 seconds after the initial execution unless: (a) There is a change of price in the Exchange's disseminated offer (bid) in the series of the Eligible Option Class in which there was the initial execution; and (b) such price continues to be the NBBO. After this 15 second period, and until the sooner of (y) one minute after the initial execution or (z) a change in the Exchange's disseminated bid (offer), the Exchange is not obligated to provide an automatic execution for any Principal Orders in the same Eligible Option Class received from the Participant Exchange that sent the order resulting in the initial execution, and thus may treat any such Principal Orders as being greater than the Firm Principal Quote Size.

(d) Responses to Linkage Orders.

(1) Failure to Receive a Timely Response. A Member who does not receive a response to a P Order or a P/A Order within 20 seconds of sending the order may reject any response received thereafter purporting to report an execution of all or part of that order. The Member so rejecting the response shall inform the Participant Exchange sending that response of the rejection within 15 seconds of receipt of the response.

(2) Failure to Send a Timely Response. If a Member responds to a P Order or P/A Order more than 20 seconds after receipt of that order, and the Participant Exchange to whom the Member responded cancels such

response, the Member shall cancel any trade resulting from such order and shall report the cancellation to the Option Price Reporting Authority (''OPRA'').

(e) Receipt of Linkage Orders. The Exchange will provide for the execution of P/A Orders and Principal Orders if its disseminated price is (i) equal to or better than the Reference Price, and (ii) equal to the then-current NBBO. If the size of a P/A Order or Principal Order is not larger than the Firm Customer Quote Size or Firm Principal Quote size, respectively, the Exchange will provide for the execution of the entire order, and shall execute such order in its automatic execution system if such order is eligible for automatic execution and that system is available. Subject to paragraph (c) above, if the size of a P/A Order or Principal Order is larger than the Firm Customer Quote Size or Firm Principal Quote Size, respectively, or if the Linkage Order received is not eligible to be executed automatically via AUTO-X pursuant to Exchange rule 1080(c)(iv), the specialist must address the order within 15 seconds to provide an execution for at least the Firm Customer Quote Size or Firm Principal Quote Size, respectively. If the order is not executed in full, the Exchange will move its disseminated quotation to a price inferior to the Reference Price.

Order Protection

Rule 1085. (a) Avoidance and Satisfaction of Trade-Throughs.

(1) General Provisions. Absent reasonable justification and during normal market conditions, Members should not effect Trade-Throughs. Except as provided in paragraph (b) below, if a Member effects a Trade-Through with respect to the bid or offer of a Participant Exchange in an Eligible Option Class and the Exchange receives a Satisfaction Order from an Aggrieved Party, either:

(i) the Member who initiated the Trade-Through shall satisfy, or cause to be satisfied, the Aggrieved Party by filling the Satisfaction Order in accordance with subparagraph (a)(2) below; or

(ii) if the Member elects not to do so (and, in the case of Third Participating Market Center Trade-Through, the Member obtains the agreement of the contra party that received the Linkage Order that caused the Trade-Through), then the price of the transaction that constituted the Trade-Through shall be corrected to a price at which a Trade-Through would not have occurred. If the price of the transaction is corrected, the Member correcting the price shall report the corrected price to OPRA, notify the Aggrieved Party of the correction and cancel the Satisfaction Order.

(2) Price and Size. The price and size at which the bid or offer traded through shall be filled is as follows:

(i) Price. A Satisfaction Order shall be filled at the reference price. However, if the Reference Price is the price of an apparent Block Trade that caused the trade-through, and such trade was not, in fact, a Block Trade, then the member may cancel the Satisfaction Order. In that case, the Member shall inform the Aggrieved Party within three minutes of receipt of the Satisfaction Order of the reason for the cancellation. Within three minutes of receipt of such cancellation, the Aggrieved Party may resend the Satisfaction Order with a Reference Price of the bid or offer that was traded through.

(ii) Size. An Aggrieved Party may send a Satisfaction Order up to the size of the Verifiable Number of Customer Contracts that were included in the disseminated bid or offer that was traded through, subject to the following limitations:

(A) If the number of contracts to be satisfied exceeds the size of the transaction that caused the Trade-Through, the size of the Satisfaction Order(s) that must be filled with respect to each Participant Exchange(s) shall be limited to the size of the transaction that caused the Trade-Through, and the remainder of any Satisfaction Order(s) shall be cancelled;

(B) If the transaction that caused the Trade-Through was for a size larger than the Firm Customer Quote Size with respect to any of the Participant Exchange(s) traded through, the total number of contracts to be filled, with respect to all Satisfaction Orders received, shall not exceed the size of the transaction that caused the Trade-Through. In that case, the Member shall fill the Satisfaction Orders pro rata based on the Verifiable Number of Customer Contracts traded through on each Participant Exchange, and shall cancel the remainder of such Satisfaction Orders; and

(C) Notwithstanding paragraphs A and B above, if the transaction that caused the Trade-Through occurred during the five minutes prior to the regularly-scheduled close of trading in the principal market in which the underlying security is traded, the maximum number of contracts to be satisfied with respect to any one Participant Exchange shall be 10 contracts.

(3) Rejection of Fills of Satisfaction Orders. Within 30 seconds of receipt of notification that another Participant Exchange has filled a Member's Satisfaction Order, the member that sent the Satisfaction Order may reject such fill, but only to the extent that either: (i) the order(s) for the customer contracts underlying the Satisfaction Order already have been filled; or (2) the customer orders to buy (sell) the contracts underlying the Satisfaction Order were cancelled.

(4) Protection of Customers. Whenever subparagraph (a)(1) applies, if Public Customer orders (or P/A Orders representing Public Customer orders) constituted either or both sides of the transaction involved in the Trade-Through, each such Public Customer order (or P/A Order) shall receive:

(i) The price that caused the Trade-Through; or

(ii) The price at which the bid or offer traded through was satisfied, if it was satisfied pursuant to subparagraph (a)(1)(i), or the adjusted price, if there was an adjustment, pursuant to subparagraph (a)(1)(ii),

Whichever price is most beneficial to the Public Customer order. Resulting differences in prices shall be the responsibility of the Member who initiated the Trade-Through.

(b) Exceptions to Trade-Through Liability. The provisions of paragraph (a) pertaining to the satisfaction of Trade-Throughs shall not apply under the following circumstances:

(1) The Member who initiated the Trade-Through made every reasonable effort to avoid the Trade-Through, but was unable to do so because of a systems/equipment failure or malfunction;

(2) The Member trades through the market of a Participant Exchange to which such Member had sent a P/A Order or Principal Order, and within 20 seconds of sending such order the receiving Participant Exchange had neither executed the order in full nor adjusted the quotation traded through to a price inferior to the Reference Price of the P/A Order or Principal Order;

(3) The bid or offer traded through was being disseminated from a Participant Exchange whose quotes were Non-Firm with respect to such Eligible Option Class;

(4) The Trade-Through was other than a Third Participating Market Center Trade-Through and occurred during a period when, with respect to the Eligible Option Class, the Exchange's quotes were Non-Firm; provided, however, that, unless one of the other conditions of this paragraph (b) applies, during any such period: (i) Members shall make every reasonable effort to avoid trading through the firm quotes of another Participant Exchange; and (ii) it shall not be considered an exception to

paragraph (a) if a Member regularly trades through the firm quotes of another Participant Exchange during such period;

(5) The bid or offer traded through was being disseminated by a Participant Exchange during a trading rotation in the Eligible Option Class;

(6) The transaction that caused the Trade-Through occurred during a trading rotation;

(7) The transaction that caused the Trade-Through was the execution of a Complex Trade;

(8) In the case of a Trade-Through other than a Third Participating Market Center Trade-Through, a Satisfaction Order with respect to the Trade-Through was not received by the Exchange from the Aggrieved Party promptly following the Trade-Through and, in any event, (i) except in the final five minutes of trading, within three minutes from the time the report of the transaction(s) that constituted the Trade-Through was disseminated over OPRA, and (ii) in the final five minutes of trading, within one minute from the time the report of the transaction(s) that constituted the Trade-Through was disseminated over OPRA; or

(9) In the case of a Third Participating Market Center Trade-Through, a Satisfaction Order with respect to the Trade-Through was not received by the Exchange promptly following the Trade-Through. In applying this provision, the Aggrieved Party must send the Exchange a Satisfaction Order within three minutes from the time the report of the transaction that constituted the Trade-Through was disseminated over OPRA. To avoid liability for the Trade-Through, the Member receiving such Satisfaction Order must cancel the Satisfaction Order and inform the Aggrieved Party of the identity of the Participant Exchange that initiated the Trade-Through within three minutes of the receipt of such Satisfaction Order (within one minute in the final five minutes of trading). The Aggrieved Party then must send the Participant Exchange that initiated the Trade-Through a Satisfaction Order within three minutes of receipt of the cancellation of the initial Satisfaction Order (within one minute in the final five minutes of trading).

(c) Responsibilities and Rights Following Trade-Through Complaints.

(1) When a Member receives a Satisfaction Order, that Member shall respond as promptly as practicable pursuant to Exchange procedures by either:

(i) Specifying that one of the exceptions to Trade-Through liability specified in paragraph (b) above is applicable and identifying that particular exception; or

(ii) Taking the appropriate corrective action pursuant to paragraph (a) above.

(2) If the Member who initiated the Trade-Through fails to respond to a Satisfaction Order or otherwise fails to take the corrective action required under paragraph (a) within three minutes of receiving notice of a Satisfaction Order, and the Exchange determines that:

(i) There was a Trade-Through; and

(ii) None of the exceptions to Trade-Through liability specified in paragraph (b) above were applicable,

then, subject to the next paragraph, the Member who initiated the Trade-Through shall be liable to the Aggrieved Party for the amount of the actual loss resulting from non-compliance with paragraph (a) and caused by the Trade-Through.

If either (a) the Aggrieved Party does not establish the actual loss within 30 seconds from the time the Aggrieved Party received the response to its Satisfaction Order (or, in the event that it did not receive a response, within four minutes from the time the Aggrieved Party sent the Satisfaction Order), or (b) the Aggrieved Party does not notify the Participant Exchange that initiated the Trade-Through of the amount of such loss within one minute of establishing the loss, then the liability shall be the lesser of the actual loss or the loss caused by the Trade-Through that the Aggrieved Party would have suffered had that party purchased or sold the option series subject to the Trade-Through at the ''mitigation price.'' For the purposes of this paragraph, the ''mitigation price'' is the highest reported bid (in the case where an offer was traded through) or the lowest reported offer (in the case where a bid was traded through), in the series in question 30 seconds from the time the Aggrieved Party received the response to its Satisfaction Order (or, in the event that it did not receive a response, within four minutes from the time the Aggrieved Party sent the Satisfaction Order). If the Participant Exchange receives a Satisfaction Order within the final four minutes of trading (on any day except the last day of trading prior to the expiration of the series which is the subject of the Trade-Through), then the mitigation price shall be the price established at the opening of trading in that series on the Aggrieved Party's Participant Exchange on the next trading day. However, if the price of the opening transaction is below the opening bid or above the opening offer as established during the opening rotation, then the mitigation price shall be the opening bid (in the case where an offer was traded through) or opening offer (in the case where a bid was traded through). If the Trade-Through involves a series that expires on the day following the day of the Trade-Through and the Satisfaction Order is received within the last four minutes of trading, the ''mitigation price'' shall be the final bid (in the case where an offer was traded through) or offer (in the case where a bid was traded through) on the day of the trade that resulted in the Trade-Through.

(3) A Member that is an Aggrieved Party under the rules of another Participant Exchange governing Trade-Through liability must take steps to establish and mitigate any loss such Member might incur as a result of the Trade-Through of the Member's bid or offer. In addition, the Member shall give prompt notice to the other Participant Exchange of any such action in accordance with subparagraph (c)(2) above.

(d) Limitations on Trade-Throughs. Members may not repeatedly trade through better prices available on other exchanges, whether or not the exchange or exchanges whose quotations are traded through are Participant Exchanges, unless one or more of the provisions of paragraph (b) above are applicable. In applying this provision:

(1) The Exchange will consider there to have been a Trade-Through if a Member executes a trade at a price inferior to the NBBO even if the Exchange does not receive a Satisfaction Order from an Aggrieved Party pursuant to subparagraph (a)(1);

(2) The Exchange will not consider there to have been a Trade-Through if a Member executes a Block Trade at a price inferior to the NBBO if such Member satisfied all Aggrieved Parties pursuant to subparagraph (a)(2) following the execution of the Block Trade; and

(3) The Exchange will not consider there to have been a Trade-Through if a Member executes a trade at a price inferior to the quotation being disseminated by an exchange that is not a Participant Exchange if the Member made a good faith effort to trade against the superior quotation of the non-Participant Exchange prior to trading through that quotation. A ''good faith effort'' to reach a non-Participant Exchange's quotation requires that a Member at least had sent an order that day to the non-Participant Exchange in the class of options in which there is a Trade-Through, at a time at which such non-Participant Exchange was not relieved of its obligation to be firm for its quotations pursuant to Rule 11Ac1–

1 under the Exchange Act, and such non-Participant Exchange neither executed that order nor moved its quotation to a price inferior to the price of the Member's order within 20 seconds of receipt of that order.

Locked and Crossed Markets

Rule 1086. (a) Eligible Market Maker Locking or Crossing a Market. An Eligible Market Maker that creates a Locked Market or a Crossed Market shall unlock (uncross) that market or shall direct a Principal Order through the Linkage to trade against the bid or offer that the Eligible Market Maker locked (crossed).

(b) Members Other than an Eligible Market Maker Locking or Crossing a Market. A Member other than an Eligible Market Maker that creates a Locked Market or a Crossed Market shall unlock (uncross) the market.

Limitation on Principal Order Access

Rule 1087. A specialist or ROT shall not be permitted to send Principal Orders in an Eligible Option Class through the Linkage for a given calendar quarter if the specialist or ROT effected less than 80 percent of its volume in that Eligible Option Class on the Exchange in the previous calendar quarter (that is, the specialist or ROT effected 20 percent or more of its volume by sending Principal Orders through the Linkage). This ''80/20'' is represented as follows:

$$\frac{X}{X+Y}$$

''X'' equals the total contract volume the specialist or market effects in an Eligible Option Class against orders of Public Customers on the Exchange during a calendar quarter (a) including contract volume effected by executing P/A Orders sent to the Exchange through the linkage, but (b) excluding contract volume effected by sending P/A Orders through the Linkage for execution on another Participant Exchange. ''Y'' equals the total contract volume the specialist or ROT effects in such Eligible Option Class by sending Principal Orders through the Linkage during that calendar quarter.

II. Self-Regulatory Organization's Statement of the Purpose of, and Statutory Basis for, the Proposed Rule Change

In its filing with the Commission, the Phlx included statements concerning the purpose of, and basis for, the proposed rule change and discussed any comments it received on the proposed rule change. The text of these statements may be examined at the places specified in item IV below. The Phlx has prepared summaries, set forth in sections A, B, and C below, of the most significant aspects of such statements.

A. Self-Regulatory Organization's Statement of the Purpose of, and Statutory Basis for, the Proposed Rule Change

1. Purpose

The purpose of the proposed rule change is to adopt rules implementing the Plan. The purpose of the Plan is to enable the Plan's Participants to act jointly in planning, developing, operating and regulating an Intermarket Options Linkage (''Linkage'') so as to further the objectives of Congress as set forth in section 11A(a) of the Act.[5] These objectives include, but are not limited to, increasing market efficiency, enhancing competition, increasing the information available to brokers and dealers and investors, facilitating the offsetting of investors' orders and contributing to the best execution of such orders. Therefore, the Exchange proposes these rules, which if approved by the Commission, should implement the Plan on the Exchange and allow the Exchange to participant in the Linkage.

Capitalized terms used in this filing and not otherwise defined herein have the meaning set forth in the proposed rules and if not defined therein, as defined in the Plan. The Exchange represents the proposed rules are consistent with the amended Plan.

The proposed rules include the following provisions:

- Proposed Phlx rule 1083, Definitions: This proposed rule contains definitions unique to the Linkage; all other definitions in the Exchange's rules would continue to apply to this chapter. Generally, these definitions would incorporate into the Exchange's rules the definitions contained in the Plan.
- Proposed Phlx rule 1084, Operation of the Linkage: This proposed rule incorporates section 7 of the Plan into the Exchange's rules. It would establish the conditions pursuant to which market makers may enter Linkage orders and imposes obligations on the Exchange with respect to how it must process incoming Linkage orders. Pursuant to a recent proposed amendment to the Plan, it would provide that a member of the Exchange may reject an execution of certain Linkage orders received more than 20 seconds after sending the order. This would be a reduction from the 30 seconds currently provided for in the Plan.

Proposed Phlx rule 1084 would provide that if a Linkage Order received is not eligible to be executed automatically via AUTO–X pursuant to Exchange rule 1080(c)(iv),[6] the Linkage Order would be handled as though the size of such order is larger than the Firm Customer Quote Size or Firm Principal Quote Size, respectively (*i.e.*, the specialist must address the order within 15 seconds to provide an execution for at least the Firm Customer Quote Size or Firm Principal Quote Size, respectively).

- Rule 1085, Order Protection: This proposed rule contains the trade-through provisions required under section 8(c) of the Plan. First, it would establish a general standard that members should avoid trade-throughs (defined in proposed Phlx rule 1083 to be a trade at a price inferior to the National Best Bid and Offer (''NBBO'')). If a member does effect a trade-through, the member would be responsible for satisfying a member of another exchange by way of a ''Satisfaction Order.'' Both the satisfaction procedures and the exceptions to the satisfaction requirements would incorporate the relevant provision of the Plan.

Finally, the proposed rule would establish potential regulatory liability for members who repeatedly trade through other exchanges, whether or not the exchanges traded through participate in the Linkage. This rule also reflects two pending amendments to the Plan:

1. As with Proposed Phlx rule 1083, this proposed rule reflects the pending amendment to reduce from 30 seconds

[5] 15 U.S.C. 78k–1(a).

[6] Proposed Exchange rule 1080(c)(iv) provides that an order otherwise eligible for AUTO–X would instead be manually handled by the specialist in the following circumstances:

(A) The Exchange's disseminated market is crossed (*i.e.*, 2–1/8 bid, 2 offer) or locked (*i.e.*, 2 bid, 2 offer), or crosses or locks the disseminated market of another options exchange;

(B) One of the following order types: stop, stop limit, market on closing, market on opening, or an all-or-none order where the full size of the order cannot be executed;

(C) The AUTOM System is not open for trading when the order is received (which is known as a pre-market order);

(D) The disseminated market is produced during an opening or other rotation;

(E) When the specialist posts a bid or offer that is better than the specialist's own bid or offer;

(F) If the NBBO Feature is not engaged, and the Exchange's bid or offer is not the NBBO;

(G) When the price of a limit order is not in the appropriate minimum trading increment pursuant to rule 1034;

(H) When the bid price is zero respecting sell orders; and

(I) When the number of contracts automatically executed within a 15 second period in an option exceeds the AUTO–X guarantee, a 30 second period ensues during which subsequent orders are handled manually.

to 20 seconds the time period a member must wait for a response to a Linkage order. If the member does not receive the response within 30 seconds, the member would be permitted to trade through the non-responding exchange without liability.

2. In addition, this rule reflects a pending Plan amendment that would limit liability for trade-throughs in the last few minutes of a trading day to 10 contracts per exchange. The purpose of that amendment is to provide protection for small customer orders, but also to limit the potential risk to members who may not be able to hedge options positions they assume near the close of trading.

• Proposed Phlx Rule 1086, Locked and Crossed Markets: This proposed rule would implement section 7(a)(i)(C) of the Plan by indicating that locked and crossed markets should be avoided and providing procedures to unlock and uncross markets that do occur.

• Proposed Phlx Rule 1087, Limitation on Principal Order Access: This proposed rule would codify the ''80/20 Test'' contained in section 8(b)(iii) of the Plan. Specifically, a market maker on the Exchange would be restricted from sending Principal Orders (other than P/A orders, which reflect unexecuted customer orders) through the Linkage if the market maker effects less than 80 percent of specified order flow on the Exchange. The Exchange would apply this test on a calendar quarter basis.

2. Statutory Basis

The Exchange believes that the basis under the Act for this proposed rule change is the requirement under section 6(b)(5) of the Act[7] that a national securities exchange have rules that are designed to prevent fraudulent and manipulative acts and practices, to promote just and equitable principles of trade, to foster cooperation and coordination with persons engaged in regulating, clearing, settling, processing information with respect to, and facilitating transactions in securities, to remove impediments to and perfect the mechanism of a free and open market and a national market system, and, in general, to protect investors and the public interest.

B. Self-Regulatory Organization's Statement on Burden on Competition

The Phlx does not believe that the proposed rule change will impose any inappropriate burden on competition.

C. Self-Regulatory Organization's Statement on Comments on the Proposed Rule Change Received From Members, Participants or Others

No written comments were either solicited or received.

III. Date of Effectiveness of the Proposed Rule Change and Timing for Commission Action

Within 35 days of the date of publication of this notice in the **Federal Register** or within such longer period (i) as the Commission may designate up to 90 days or such date if it finds such longer period to be appropriate and publishes its reasons for so finding or (ii) as to which the Phlx consents, the Commission will:

(A) By order approve such proposed rule change, or

(B) Institute proceedings to determine whether the proposed rule change should be disapproved.

IV. Solicitation of Comments

Interested persons are invited to submit written data, views and arguments concerning the foregoing, including whether the proposed rule change is consistent with the Act. Persons making written submissions should file six copies thereof with the Secretary, Securities and Exchange Commission, 450 Fifth Street, NW., Washington, DC 20549–0609. Copies of the submission, all subsequent amendments, all written statements with respect to the proposed rule change that are filed with the Commission, and all written communications relating to the proposed rule change between the Commission and any person, other than those that may be withheld from the public in accordance with the provisions of 5 U.S.C. 552, will be available for inspection and copying in the Commission's Public Reference Room. Copies of such filing will also be available for inspection and copying at the principal office of the Phlx. All submissions should refer to File No. SR–Phlx–2002–67 and should be submitted by January 17, 2003.

For the Commission, by the Division of Market Regulation, pursuant to delegated authority.[8]

Margaret H. McFarland,

Deputy Secretary.

[FR Doc. 02–32794 Filed 12–26–02; 8:45 am]

BILLING CODE 8010–01–U

[7] 15 U.S.C. 78f(b)(5).

[8] 17 CFR 200.30–3(a)(12).

SMALL BUSINESS ADMINISTRATION

[Declaration of Disaster #3475]

Territory of Guam

As a result of the President's major disaster declaration for Public Assistance on December 8, 2002, and Amendment 1 adding Individual Assistance on December 19, 2002, I find that the Territory Of Guam constitutes a disaster area due to damages caused by Super Typhoon Pongsona occurring on December 8, 2002 and continuing. Applications for loans for physical damage as a result of this disaster may be filed until the close of business on February 18, 2003 and for economic injury until the close of business on September 19, 2003 at the address listed below or other locally announced locations: U.S. Small Business Administration, Disaster Area 4 Office, PO Box 13795, Sacramento, CA 95853–4795.

The interest rates are:

	Percent
For Physical Damage:	
Homeowners with credit available elsewhere	5.875
Homeowners without credit available elsewhere	2.937
Businesses with credit available elsewhere	6.648
Businesses and Non-profit Organizations without credit available elsewhere	3.324
Others (Including Non-Profit Organizations) with credit available elsewhere	5.500
For Economic Injury:	
Businesses and Small Agricultural Cooperatives without credit available elsewhere	3.324

The number assigned to this disaster for physical damage is 347508 and for economic injury the number is 9T6900.

(Catalog of Federal Domestic Assistance Program Nos. 59002 and 59008).

Dated: December 20, 2002.

Herbert L. Mitchell,

Associate Administrator, for Disaster Assistance.

[FR Doc. 02–32802 Filed 12–26–02; 8:45 am]

BILLING CODE 8025–01–P

DEPARTMENT OF STATE

[Public Notice 4242]

Finding of No Significant Impact and Summary Environmental Assessment—Mexicali—Calexico International Conveyor Belt, Imperial County, CA

The proposed action is to issue a Presidential Permit to Aggregate Products Inc. to construct, operate and maintain an international conveyor belt east of Calexico, California, and approximately 3,800 feet east of the Calexico II Port of Entry, and adjacent to Mexicali, Baja California, Mexico, the purpose of which is to transport aggregate materials (size-segregated rock and sand) from Mexico to Aggregate Products Inc.'s land in the Gateway of the Americas Specific Plan Area in Imperial County, California.

On November 19, 2001, the Bureau of Reclamation of the U.S. Department of the Interior issued the company a ''License Relating to an International Transportation Conveyor Belt Crossing the All-American Canal System'' to construct, operate and maintain the conveyor belt, ''* * * within, on over and/or across certain lands which the United States owns in fee or has reserved Rights-of-Way * * *.'' The License applies to a ''strip of land 20.00 feet in width * * *'' with the centerline ''* * * beginning at a point in the International Boundary between the Republic of Mexico and the United States of America * * *'' and from that point north 541.87 feet ''* * * to a point in the north line of the All-American Canal right-of-way.'' The north line of the All-American Canal right-of-way also marks the beginning of the Gateway of the Americas Specific Plan Area.

I. Background

The U.S. Department of State (the ''Department'') is charged with the issuance of Presidential Permits for the construction of international conveyor belts under Executive Order 11423 of August 16, 1968, 33 FR 11741 (1968), as amended by Executive Order 12847 of May 17, 1993, 58 FR 29511 (1993).

In 2000, Aggregate Products Inc. (the ''Sponsor''), with the assistance of Giroux & Associates and Gibson Gonzalez Associates, initiated preparation of an environmental assessment of the potential environmental effects of the proposed International Conveyor Belt (''Environmental Assessment''). A draft final ''Environmental Assessment, Calexico/Mexicali Conveyor Project, Calexico P.O.E./Mexico Border'' was completed on April 5, 2000. This was amended and supplemented by the ''Environmental Assessment for Aggregate Products Inc. Conveyor Belt Project'' dated March 7, 2001, and presented to the Department of State, which considered two alternative options together with the ''no action'' alternative.

The Department has acted as lead federal agency supervising preparation and completion of the Environmental Assessment and has engaged in follow-up inquiries concerning issues that have been raised with respect to the International Conveyor Belt by government agencies and by members of the public. The Department, acting in a manner consistent with its regulations for the implementation of the National Environmental Policy Act (''NEPA'') in the context of its responsibilities with respect to Presidential Permits, has conducted its own, independent review of the Environmental Assessment, as supplemented. The Environmental Assessment has also been reviewed by numerous federal and sub-federal agencies. Each such ''cooperating agency'' has approved or accepted the Environmental Assessment, provided, in certain cases, that mitigation recommendations are followed. These cooperating agencies are:

U.S. Government: The Department of Agriculture, General Services Administration, United States Section of the International Boundary and Water Commission, Department of Transportation, Department of the Interior, U.S. Fish and Wildlife Service, U.S. Bureau of Reclamation, Environmental Protection Agency, Food and Drug Administration, Federal Emergency Management Administration, Department of Defense, Department of Commerce, Council on Environmental Quality and the Customs Service.

State of California: State Officer for Historic Preservation, Department of Transportation, and the California Technology, Trade and Commerce Agency. Imperial County: Air Pollution Control District, Department of Public Works, Department of Planning, Imperial Irrigation District.

Based on the draft final Environmental Assessment, as amended and supplemented, information developed by the Department during the review of the Sponsor's application and all comments received (referred to hereinafter collectively as the ''Final Environmental Assessment''), the Department has concluded that the issuance of the permit will not have a significant impact on the quality of the human environment within the United States. Therefore, an environmental impact statement (''EIS'') will not be prepared. A summary of the assessment of potential environmental impacts is presented below:

II. Factors Considered

The California Department of Transportation calculates investments of over $1 billion in near- and long-term border trade corridor projects. The decision to make major investments in upgrading and expanding the highway system in the border region and north to major population centers is directly attributable to the explosive growth in trade since NAFTA came into being. This unprecedented program of transportation improvements means higher demand for raw materials, including aggregate. For much of Imperial County, and areas of San Diego County as well, the closest source of quality aggregate is Mexico.

There are only a limited number of pits in Imperial County that yield, on a cost-competitive basis, sufficiently high quality aggregate to meet federal and state road construction standards. All these locations are far from the majority of major highway projects. The material from these pits also has high sand-to-gravel ratios, which increases the cost of processing the aggregates.

Finding new pits that yield high-grade aggregate is further complicated by the fact that much of the area where the aggregates exist, such as the foothill mountain ranges, is under government control. This includes military areas (Chocolate Mountains Naval Reservation Aerial Gunnery Range, U.S. Navy Bombing Area—Superstition Mountain, and Carrizo Impact Area) and State and Federal parks (Coyote Wilderness, Anza-Borrego Desert State Park, Jacumba Wilderness, and Algodones Sand Dunes).

Privately owned aggregate sites are generally located at distances that mean substantial transportation costs for projects in the border region. For example, all of the high grade aggregates used for the State Route 7 extension and the Commercial Vehicle Enforcement Facility were shipped from Salton Sea Beach, 74 miles from the Calexico II Port of Entry. The distance from the pit site in Mexico to the border is only 28 miles.

The Department in this case considered the two alternatives proposed. These are described in detail in the Final Environmental Assessment and in summary fashion as follows:

Alternative 1 (Project): The project involves the construction of a conveyor belt to import aggregate from Mexico. The aggregate will be brought to the

conveyor belt by truck from the mine site 28 miles to the south. The conveyor belt will run from a staging area in Mexico to Aggregate Products Inc.'s property in the Gateway of the Americas Specific Plan Area. In the United States, the belt will cross the All-American Canal and the adjacent rights-of-way. The area from the border to the canal structure, the service roads on the canal structure and the road between the canal structure and the company's property are all cleared land.

The belt will be approximately 550 feet long and 10 feet wide, and will be supported by standards or pylons, which will be fixed in place. The belt will be a minimum of 16 feet above the service roads that are a part of the canal structure as well as the road between the canal structure and the company's property.

The company projects imports of some 1,000,000 tons of aggregate annually at peak levels.

Alternative 2: This alternative involves the use of trucks only to transport the aggregate from the mine site, across the international border, through the U.S. Customs inspection facility, through the California State vehicle inspection facility and on to the company's property in the Gateway of the Americas Specific Plan Area.

At peak level imports of 1,000,000 tons per year, this alternative would require 40,000 round trips for trucks transporting 25 tons each.

Other Alternatives: Some consideration was given initially to moving the aggregate by rail car. This alternative was eliminated from further consideration because of the high capital investment required, the high per-unit costs of short-haul rail and the inevitable traffic congestion and social costs that would result in bringing hundreds of rail cars through downtown Mexicali and through areas of Calexico with inadequate grade crossings. Another alternative is the No Action Alternative, which would maintain the status quo of trucking the aggregate within the United States from distances of up to 74 miles. While maintaining the status quo is feasible, there are environmental costs associated with doing so, such as: (a) Air Quality. The added travel from existing aggregate resources would substantially increase the regional diesel exhaust burden, resulting in 15 to 37.5 tons per year of nitrogen oxides, and smaller amounts of other pollutants compared to the proposed project; (b) Noise. High-speed trucks are strong noise generators. Noise levels at sensitive receivers near regional access routes would be increased incrementally, especially for any night or early morning materials deliveries; and (c) Transportation. Accident potential, road wear and congestion effects would be measurably increased by up to 5.4 million truck-miles per year on Imperial County roadways.

The No Action Alternative would also mean continuing reliance on higher-costs aggregates for tax-funded public projects. The California Department of Transportation, in particular, strongly supports the conveyor belt project because of its potential cost benefits to the State's taxpayers.

III. Summary of the Assessment of the Potential Environmental Impacts Resulting From the Proposed Action

The Environmental Assessment provides information on the environmental effects of the alternatives outlined above. On the basis of the Final Environmental Assessment, the Department makes the following determinations regarding the potential environmental impacts of Alternative 1, the Project Alternative.

Physical Conditions: The project will have minimal impact on any soils because the physical footprint of the conveyor system will be very small and will require only infrequent access. Imperial County APCD regulations and use permit conditions will require dust control measures for all traveled surfaces. Wind erosion will be minimal. Water will be applied for dust control, but not in amounts to create mud or cause water erosion. The proximity of the Imperial Fault will be the design basis for all on-site structures, including the conveyor system.

Vegetation: No federal or California listed endangered or threatened plant species occur within the project site. The project will not disrupt the vegetation found along the Alamo River, which is 60 feet from the company's property in the Gateway Specific Plan Area. The project site itself—the area between the International Boundary and the All-American Canal, the Canal Structure, and the road between the Canal and the company's property—is barren of vegetation.

Wildlife: (a) Fish. There are no endangered/threatened federal or California listed species that occur within the project area. (b) Birds. Several species of birds use the Alamo River for foraging. One federally listed endangered specie, the Yuma Clapper Rail, was observed in a May 1998 field survey within a quarter mile of the project area. A very small stand of cattails was found approximately 75 feet east of the company's property, but no Yuma Clapper Rail were observed in the area. (c) Mammals. Mammals could be displaced temporarily by construction activities. No federally or California listed mammals were observed in the project area. Impacts on wildlife are anticipated to be minimal and mitigated by the applicant's environmental commitments described below.

Cultural Resources: Due to historical ground disturbance, there are no known archaeological or historical sites of interest in the project area. A cultural resources assessment was completed in 2000 and no cultural resources were found at or near the proposed project site. The All-American Canal is eligible for listing on the National Register of Historic Places.

Water Resources: No significant effects on water quality are expected to result from the project. The conveyor, which will span the All-American Canal when in use, will have a spill containment catch-tray to prevent spillage of material into the Canal.

Recreation: There are no recreational resources on or near the site potentially affected by the project.

Hazardous Substances: All POLs, hazardous substances and hazardous wastes will be handled in accordance with federal, state and local regulations. Hazardous wastes will not be burned, dumped in trash containers, deposited in landfills, buried, left on the ground or dumped in ditches. Any spills of hazardous wastes will be properly contained and the contamination handled in accordance with current regulations.

Air Resources: This alternative can be expected to cause a short-term, localized effect on fugitive particulate levels as a result of earth moving during construction. The construction area will be watered and a buffer distance maintained to protect plants and animals and minimize blowing dust. Dust emissions during operations will be minimized by compliance with air district rules against dust nuisance. Aggregate on the conveyor belt will be ''misted'' as a dust control measure. Overall, short term air effects are anticipated to be outweighed by the long term benefits to air quality that the project represents as compared with any alternative that was considered (*e.g.*, the no action alternative).

Noise: There will be a short-term increase in noise levels during construction. There will be mobile equipment noise and noise from the conveyor belt during operations. There are no known noise sensitive receivers in the immediate vicinity of the project. County ordinance will restrict the hours of construction noise and operational noise will not exceed Imperial County

standards. Short term noise effects are anticipated to be outweighed by the long term noise reduction that the project represents as compared with any alternative that was considered (*e.g.*, the no action alternative).

Environmental Justice/Socio-Economic Concerns: There will be a ''no effect'' on minority and/or low-income communities in the immediate vicinity of the project.

Health and Safety Concerns: The project is designed to minimize health and safety concerns. California State agencies regulate operations around moving equipment and all safety features required by law will be utilized. The proximity of the Imperial Fault will be the design basis for all on-site structures, including the conveyor system. The design of the conveyor pylons will prevent any unauthorized use of the conveyor to cross the All American Canal.

Possible Conflicts Between the Action and the Objectives of Federal, Regional, State and Local Use Plans, Policies and Controls for the Area Concerned: This project will be consistent with the defined land usage. The sponsor, Aggregate Products Inc. will be responsible for ensuring that all applicable environmental and construction permits are obtained prior to the implementation of any portion of this project.

Energy Requirements and Conservation Potentials: This project will cause no significant increase in energy requirements, which are limited to conveyor operations and loading/transport of aggregate materials for distribution and use in the Gateway project area.

Any Irreversible and Irretrievable Commitments of Resources: The project will be consistent with defined land usage. The commitments of resources will cause a small increase in energy for aggregate conveying, handling and transport, and in water for dust control. Such a commitment is not a significant increase in terms of regional resource availability.

Relationship Between Local Short-Term Use of Man's Environment and Maintenance and Enhancement of Long-Term Productivity: This project will be consistent with the defined land usage and is viewed as a short-term solution to the lack of aggregate resources and building materials in the project vicinity. The conveyor system disturbance ''footprint'' is sufficiently minimal as to readily allow return of the site to existing uses if the building materials market should diminish. The aggregate receiving and storage site could similarly be returned to existing uses, but the mixed industrial zoning of that parcel would likely result in eventual conversion to some non-agricultural use regardless of project implementation.

Probable Adverse Environmental Effects Which Cannot Be Avoided: The project will create human and equipment activities near biotic habitats at a greater level of intensity than do existing agricultural operations. However, the effects on wildlife are expected to be minimal. Any potential impacts would be mitigated by the environmental commitments by the applicant described below.

Probable Adverse Environmental Effects Which Cannot Be Avoided Due to Associated Cumulative Effects: The airshed is an air quality non-attainment area for particulate matter (PM–10). Any addition of particulate represents a potential for a cumulative impact. However, the proposed project is consistent with the level of development anticipated for the site parcel as part of the Gateway Specific Project Area environmental assessment process. Mitigation measures to control dust, light and noise associated with the conveyor belt project will reduce the cumulative impact of the receiving, storage and processing site operations. Cumulative impacts will also result from a number of activities that federal and state agencies may undertake. Border Patrol inspection is expected to intensify in conjunction with Gateway development. Imperial Irrigation District maintenance of the Canal may create temporary emissions of noise or dust. The standard California Department of Transportation practice to pave roads at night may require occasional night aggregate processing operations.

IV. Environmental Commitments

To ensure consistency with this FONSI as well as that of the Bureau of Reclamation, the sponsor, Aggregate Products Inc., has undertaken the following environmental commitments:

1. No company construction activities or company trucking would be allowed on the Imperial Irrigation District right-of-way adjacent to the Alamo River.
2. All efforts will be made to minimize particulate matter, lighting and noise that might affect wildlife.
3. A biologist will do a pre-construction survey to identify and protect any wildlife in the project area. All construction activities would avoid migratory bird species and their nests.
4. Any injured wildlife would be reported and/or taken to the proper authorities for rehabilitation.
5. In the event of unexpected discovery of archaeological or historical cultural resources, all activity shall cease in the area of discovery. Immediate telephone notification of the discovery shall be made to a responsible federal agency official. In addition, all reasonable efforts to protect the cultural resources discovered shall be made. The activity may resume only after the federal agency official has authorized a continuance.
6. The All-American Canal is eligible for listing on the National Register of Historic Places (CA–IMP–7320–H). This project will result in no adverse effects to those qualities of the Canal that qualify it for listing on the National Register. All construction must adhere to the proposed construction plan. There will be no impacts to the Canal during the life of this project. All weight bearing footings will be outside the Canal footprint and away from the exterior toe slope. Heavy equipment will be kept away from the Canal at all times.
7. Measures will be taken to prevent conveyed materials, including soil and rock, from being dropped into the Canal in order to avoid adverse effects on the current water quality.
8. All construction shall comply with applicable seismic codes to minimize failure during a possible earthquake on the Imperial Fault.
9. All petroleum, oils, and lubricants (POL) will be properly contained. Waste POLs and other articles, such as batteries, will not be burned, dumped in trash containers, deposited in landfills, buried, left on the ground or dumped in ditches. All materials brought out to the project will be disposed of in a proper manner.
10. Any spills of POLs or hazardous wastes would be properly contained and the contamination cleaned up and disposed of in accordance with current regulations. All spills will be immediately reported to the HAZMAT office in Calexico.
11. To protect plants and wildlife and minimize blowing dust, the area would be watered during construction and site operations.
12. There would be a short-term increase in noise levels during construction. Proper ear protection would be used by all personnel working in the area.
13. A berm and fence shall be erected along the eastern property line separating the aggregate receiving/distribution site from the Alamo River. Fencing material shall be made partially opaque to reduce glare and act as a dust transport barrier.
14. Landscaping shall be planted along the site frontage along any public

road to visually screen the site and provide potential wildlife habitat.

15. All herbicides used in landscape maintenance will be properly approved and applied in accordance with all regulations.

16. The conveyor system shall be designed to prevent unauthorized access by non-project personnel to minimize danger of falls or injury.

V. Conclusion: Analysis of the Environmental Assessment Submitted by the Sponsor

Based on the Department's independent review of the Final Environmental Assessment, comments received during its preparation and comments received by the Department from Federal and State agencies including measures which the sponsor has commited to take to prevent potentially adverse environmental impacts, the Department has concluded that issuance of a Presidential Permit authorizing construction of the proposed Mexicali-Calexico International Conveyor Belt, as proposed to be constructed in Alternative No. 1 as set forth in the Environmental Assessment, would not have a significant impact on the quality of the human environment within the United States. Accordingly, a Finding of No Significant Impact is adopted and an environmental impact statement will not be prepared.

The Final Environmental Assessment prepared by the Department addressing this action is on file and may be reviewed by interested parties at the Department of State, 2200 C Street NW., Room 4258, Washington, DC 20520 (Attn: Mr. Dennis Linskey, Tel 202–647–8529).

Dated: December 20, 2002.

Dennis Linskey,

Coordinator, U.S.-Mexico Border Affairs, Office of Mexican Affairs, Department of State.

[FR Doc. 02–32763 Filed 12–26–02; 8:45 am]

BILLING CODE 4710–29–P

OFFICE OF THE UNITED STATES TRADE REPRESENTATIVE

Notice of Issuance by the Free Trade Area of the Americas (FTAA) Committee of Government Representatives on the Participation of Civil Society of an Open and Ongoing Invitation for Public Comment

AGENCY: Office of the United States Trade Representative (USTR).

ACTION: Notice.

SUMMARY: The Office of the United States Trade Representative (USTR) is providing notice that the Committee of Government Representatives on the Participation of Civil Society (Civil Society Committee), established by the 34 countries participating in the negotiations for the Free Trade Area of the Americas (FTAA), has issued an Open and Ongoing Invitation for public comment on all aspects of the FTAA, including: The second draft consolidated texts of the FTAA Agreement, released to the public on November 1, 2002; the ongoing FTAA negotiations; and the FTAA process in general. Submissions in response to the Invitation should be sent directly to the FTAA addresses indicated below.

DATES: Public comment in response to the Open and Ongoing Invitation is welcome by the FTAA Civil Society Committee on a continuing basis. For submissions to be reflected in the Committee's Report to the FTAA Ministers for their eighth meeting in Miami, Florida in the fourth quarter of 2003, submissions must be received by the Chairperson of the FTAA Civil Society Committee no later than May 1, 2003.

ADDRESSES: The public is strongly encouraged to submit documents electronically. Submissions should be sent directly to the ''Chair of the Committee of Government Representatives on the Participation of Civil Society,'' at only one of the following addresses:

Submissions by electronic mail: soc@ftaa-alca.com.

Please note that submissions from civil society will be received at the addresses below up to February 24, 2003. After this date, the official FTAA Web site (*http://www.ftaa-alca.org*) will list the corresponding addresses of the new headquarters of the FTAA Administrative Secretariat in Puebla, Mexico.

Submissions by facsimile: (011) (507) 270–6993.

Via Postal Mail: c/o Secretaria del Area de Libre Comercio de Las Americas (ALCA), Apartado Postal 89–10044, Zona 9, Cuidad de Panama, Republica de Panama.

Via Private Messenger/Couriere Service: c/o Secretaria del Area de Libre Comercio de Las Americas (ALCA), Hotel Caesar Park Panama, Via Israel y Calle 77, San Francisco, Cuidad de Panama, Republica de Panama.

FOR FURTHER INFORMATION CONTACT: The official version of the Open and Ongoing Invitation for public comment and a cover sheet identifying information to be included with submissions to the Civil Society Committee are available on the USTR Web site (*http://www.ustr.gov*) and the official FTAA Web site (*http://www.ftaa-alca.org*). The cover sheet is reproduced below. The USTR and FTAA Web sites also contain background information regarding the FTAA negotiations, including the second draft consolidated texts of the FTAA agreement, the Civil Society Committee's Report of November 2002 to the FTAA Trade Ministers, and the Quito Ministerial Declaration. Any questions concerning the Open and Ongoing Invitation should be addressed to Christina Sevilla, Director, USTR's Office of Intergovernmental Affairs and Public Liaison, at (202) 395–6120. Questions regarding the FTAA negotiations should be addressed to the agency's Office of the Americas at (202) 395–5190.

SUPPLEMENTARY INFORMATION:

1. Background

Committee of Government Representatives on the Participation of Civil Society

At the 1998 FTAA Ministerial meeting in San Jose, Costa Rica, the hemishpere's trade Ministers jointly recognized and welcomed the interests and concerns expressed by a broad spectrum of interested non-governmental parties in the hemisphere, and encouraged these and other parties to provide their views on trade matters related to the FTAA negotiations. In order to facilitate this process, the Ministers agreed to establish the FTAA Civil Society Committee. Since its first meeting in October 1998, the Committee has approved four Open Invitations, the latest on December 10, 2002, soliciting views from the hemisphere's public. The Open Invitations were announced on the FTAA Web site, and countries agreed to use national mechanisms to disseminate the invitations further. In the United States, the invitations were disseminated through a variety of means, including press releases, notices to advisory committees, **Federal Register** notices, and public meetings.

The Committee has prepared reports for Ministers describing the submissions it received from the public. These reports have been published on the official FTAA Web site. Since April 2001, the Committee has provided, directly to the negotiators in each FTAA entity, the submissions received from the public.

Quito Ministerial Mandate

At the seventh FTAA Ministerial Meeting held in Quito, Ecuador, on

November 1, 2002, (Quito Ministerial) the Ministers responsible for trade in the hemisphere reaffirmed their commitment to the principle of transparency in the FTAA process and recognized the need to enhance and sustain participation of the different sectors of civil society in this process.

At the close of the Quito Ministerial, the Ministers issued a declaration in which they acknowledged the receipt of the contributions submitted in response to the Committee's Third Open Invitation to Civil Society (issued 1 November 2001), and thanked the organizations and persons who took the time and effort to contribute their views. Ministers also reiterated their instruction to the Committee to continue to forward to the FTAA entities the contributions submitted by civil society that refer to their respective issue areas, along with those related to the FTAA process in general.

Public Release of FTAA Draft Texts

At the Quito Ministerial meeting, Western Hemisphere trade Ministers decided to make public the second FTAA draft consolidated texts. The Ministers' prior decision to release the first version of the draft consolidated texts of the FTAA Agreement was endorsed by the hemisphere's leaders at the Quebec Summit of the Americas on April 20–22, 2001.

The second draft consolidated texts were made available on November 1, 2002 on the USTR Web site and on the official FTAA Web site in all four languages. The texts were produced by the nine FTAA Negotiating Groups (market access; agriculture; services; intellectual property rights; investment; government procurement; competition policy; dispute settlement; and subsidies, antidumping and countervailing duties) and by the FTAA Technical Committee on Institutional Issues. The second draft consolidated texts contain many brackets, indicating that the text enclosed by such brackets has not been agreed to by all FTAA governments.

2. Invitation for Public Comments

On December 10, 2002, the FTAA Civil Society Committee issued an Open and Ongoing Invitation to the public in the Western Hemisphere for written comments on the FTAA process. The Open and Ongoing Invitation is an important part of U.S. efforts to ensure that the views of the public receive consideration in the FTAA negotiating process and to encourage the public's participation.

Public comment in response to the Open and Ongoing Invitation is welcome by the FTAA Civil Society Committee on a continuing bases. Comments received by the Committee through May 1, 2003 will form the basis for the Committee's next report to the FTAA trade Ministers.

3. Requirements for Submission

In order to be considered, each submission must:

—Identify the submitter(s), specifying name(s) and contact information;

—Make reference to matters relating to the FTAA process and/or the second draft FTAA Agreement;

—Be in written form, in at least one of the official FTAA languages (Spanish, English, French, Portugese);

—Be accompanied by the cover sheet which follows (and also is available on the USTR and FTAA Web sites), with an indication of the FTAA entity or entities to which contribution pertains;

—If greater than five pages, include an executive summary, no longer than two pages, which summarizes and identifies the issues considered in the document. (The FTAA Secretariat will translate all executive summarizes and contributions if less than five pages.)

—Be sent directly to the Chair of the Committee of Government Representatives on the Participation of Civil Society at one of the above addresses.

Contributions in response to the Committee's Open and Ongoing Invitation can be submitted by e-mail, fax, courier, or postal mail and must be accompanied by the submission cover sheet (reproduced below). In the interest of facilitating translation into the working languages of the FTAA (English and Spanish) and distribution among the countries of the hemisphere, it is highly recommended that contributions be submitted via e-mail or otherwise in electronic format (*i.e.*, on computer diskette), to one of the addresses above. Contributions submitted by other means will be given equal consideration and every effort will be made to process the transmission of these documents expeditiously.

In a separate notice being published today, the interagency Trade Policy Staff Committee (TPSC) is inviting comments on the second draft consolidated texts of the FTAA Agreement. Members of the public may choose to submit comments to the FTAA Civil Society Committee as specified above, the TPSC, or both.

Christina Sevilla,

Director, Intergovernmental Affairs and Public Liaison.

FTAA—Committee of Government Representatives on the Participation of Civil Society (SOC); Cover Sheet for Open Invitation Contributions

Name(s) _____
Organization(s) _____
Address _____
Telephone _____
E-mail _____
Country _____
Fax _____
Number of Pages _____
Language _____
Contribution covers the following country(ies) or region(s): _____

FTAA Entities

(Please check the FTAA Entity(ies) addressed in the contribution).

Negotiating Group on Agriculture
Negotiating Group on Competition Policy
Negotiating Group on Dispute Settlement
Negotiating Group on Government Procurement
Negotiating Group on Intellectual Property Rights
Negotiating Group on Investment
Negotiating Group on Market Access
Negotiating Group on Services
Negotiating Group on Subsidies, Antidumping and Countervailing Rights
Committee of Government Representatives on the Participating of Civil Society
Joint Government-Private Sector Committee of Experts on Electronic Commerce
Consultative Group on Smaller Economies
Technical Committee on Institutional Issues (general and institutional aspects of the FTAA Agreement)
FTAA Process (check if the contribution is of relevance of all the entities)

Executive Summary: (2 pages maximum) must accompany any contribution with more than five pages. (Executive summaries of contributions of more than five pages as well as contributions totaling less than five pages are to be forwarded to FTAA Negotiating Groups and other Entities according to the information provided above.)

[FR Doc. 02–32767 Filed 12–26–02; 8:45 am]

BILLING CODE 3190–01–P

OFFICE OF THE UNITED STATES TRADE REPRESENTATIVE

Request for Public Comments on the Second Draft Consolidated Texts of the Free Trade Area of the Americas (FTAA) Agreement

AGENCY: Office of the United States Trade Representative.

ACTION: Notice and request for comments.

SUMMARY: The second draft consolidated texts of the Free Trade Area of the Americas Agreement (FTAA) have been publicly released and posted on the USTR website (*http://www.ustr.gov*) and on the official FTAA website (*http://www.ftaa-alca.org*). The texts are available in the four official languages of the FTAA: English, Spanish, French, and Portuguese. The interagency Trade Policy Staff Committee (TPSC) is requesting written comments from the public on the second draft consolidated texts of the FTAA Agreement.

DATES: Public comments should be received by Friday, January 31, 2003.

ADDRESSES: Submissions by electronic mail: *FR0060@ustr.gov.*

Submissions by facsimile: Gloria Blue, Executive Secretary, Trade Policy Staff Committee, at (202) 395–6143. The public is strongly encouraged to submit documents electronically rather than by facsimile.

FOR FURTHER INFORMATION CONTACT: For procedural questions concerning public comments, contact Gloria Blue, Executive Secretary, Trade Policy Staff Committee, Office of the United States Trade Representative at (202) 395–3475. All other questions concerning the FTAA negotiations should be addressed to the agency's Office of the Americas at (202) 395–5190. The FTAA second draft consolidated texts are available on the USTR Website (*http://www.ustr.gov*) and the official FTAA website (*http://www.ftaa-alca.org*). This official FTAA website also contains general information regarding the FTAA process, including official documents.

SUPPLEMENTARY INFORMATION:

1. Background

Trade Ministers from the 34 democratically-elected governments in the Western Hemisphere made public the second draft consolidated texts of the FTAA agreement on November 1, 2002, immediately following the close of their Ministerial meeting in Quito, Ecuador. The first draft consolidated texts of the FTAA agreement previously had been made public on July 3, 2001. The TPSC previously invited public comments on the first version of the draft consolidated FTAA texts [66 FR 36614 (July 12, 2001)].

The second draft consolidated texts of the FTAA are currently available on the official FTAA website in the four official FTAA languages (English, Spanish, French and Portuguese). The texts contain many brackets, indicating that the draft text enclosed by such brackets has not been agreed to by all FTAA countries.

The texts include draft chapters produced by the nine FTAA Negotiating Groups (market access; agriculture; services; intellectual property rights; investment; government procurement; competition policy; dispute settlement; and subsidies, antidumping and countervailing duties). The draft texts also include a first preliminary draft text by the FTAA Technical Committee on Institutional Issues (TCI). This section contains preliminary views on the general provisions of the Agreement and on institutional provisions.

2. Public Comments

The TPSC previously has requested public comments on a number of matters related to the FTAA including: general U.S. positions and objectives in the FTAA, see 63 FR 36470 (July 6, 1998), and 64 FR 72715 (December 28, 1999); specific rules of origin in the FTAA, see 66 FR 22627 (May 4, 2001); scope of the environmental review for the FTAA pursuant to Executive Order 13141, see 65 FR 75763 (December 4, 2000); identification of private sector experts on electronic commerce for the Joint Committee of Experts on Electronic Commerce, see 63 FR 42090 (August 6, 1998), 64 FR 26811 (May 17, 1999), 65 FR 10847 (February 29, 2000), and 65 FR 47818 (August 3, 2000); and market access and other issues regarding the FTAA, see 64 FR 18469 (April 14, 1999). The TPSC also asked for comments on the operation of the FTAA Committee of Government Representatives on the Participation of Civil Society, see 63 FR 40579 (July 29, 1998); and the USTR provided notice in 65 FR 38872 (June 22, 2000), 66 FR 36614 (July 12, 2001), and in 66 FR 56893 (November 13, 2001) that the FTAA Committee of Government Representatives on the Participation of Civil Society had issued requests for public comments on trade matters related to the FTAA process. More recently, the TPSC issued a notice of a public hearing in 67 FR 49732 (July 31, 2002) concerning the negotiation of the FTAA Agreement.

3. Requirements for Submissions

Written comments are invited on any aspect of the second draft consolidated texts of the FTAA agreement. Persons submitting written comments should submit those documents to one of the addresses indicated above no later than January 31, 2003, to be assured of consideration by U.S. Government negotiators during this round of negotiations. If possible, comments should be submitted before this date. However, submissions will be accepted through February 28, 2003 and those submissions will be taken into consideration to the extent practicable. Comments should state clearly the position taken, should be as specific as possible, and should describe with particularity the evidence supporting that position.

In a separate notice being published today, USTR is providing notice of the FTAA Committee of Government Representatives on the Participation of Civil Society's (Civil Society Committee) Open and Ongoing Invitation. Members of the public may choose to submit comments to the TPSC, as specified above, the FTAA Civil Society Committee, or to both.

In order to facilitate prompt processing of submissions, USTR strongly urges and prefers electronic (e-mail) submissions in response to this notice. Persons making submissions by e-mail should use the following subject line: ''Second Draft FTAA Texts: Written Comments.'' Documents should be submitted as either WordPerfect, MSWORD, or text (.TXT) files. Supporting documentation submitted as spreadsheets are acceptable as Quattro Pro or Excel. For any document containing business confidential information submitted electronically, the file name of the business confidential version should begin with the characters ''BC-'', and the file name of the public version should begin with the characters ''P-''. The ''P-'' or ''BC-'' should be followed by the name of the submitter. Persons who make submissions by e-mail should not provide separate cover letters; information that might appear in a cover letter should be included in the submission itself. To the extent possible, any attachments to the submission should be included in the same file as the submission itself, and not as separate files.

Written comments submitted in response to this request will be placed in a file open to public inspection pursuant to 15 CFR 2003.5, except for comments containing business confidential information exempt from public inspection in accordance with 15 CFR 2003.6. Comments containing business confidential information must be clearly marked ''BUSINESS CONFIDENTIAL'' at the top of each page, including any cover letter or cover page, and must be accompanied by a non-confidential summary of the confidential information. All public documents and non-confidential summaries shall be available for public inspection in the USTR Reading Room. The USTR Reading Room is open to the public, by appointment only, from 10 a.m. to 12 noon and from 1 p.m. to 4

p.m., Monday through Friday. An appointment to review the file must be scheduled at least 48 hours in advance and may be made by calling (202) 395–6186. General information concerning the Office of the United States Trade Representative may be obtained by accessing its Internet Website (*http://www.ustr.gov*).

Carmen Suro-Bredie,

Chair, Trade Policy Staff Committee.

[FR Doc. 02–32746 Filed 12–26–02; 8:45 am]

BILLING CODE 3190–01–P

DEPARTMENT OF TRANSPORTATION

Coast Guard

Maritime Administration

[USCG–2002–14134]

Port Pelican LLC Deepwater Port License Application

AGENCY: Coast Guard and Maritime Administration, DOT.

ACTION: Notice of application.

SUMMARY: The Coast Guard and the Maritime Administration (MARAD) give notice, as required by the Deepwater Port Act of 1974, as amended, that they have received an application for the licensing of a deepwater port, and that the application appears to contain the required information. The notice summarizes the applicant's plans and the procedures we will follow in considering the application.

DATES: Any public hearing held in connection with this application must be held not later than August 25, 2003. The application will be approved or denied within 90 days after the last public hearing held on the application.

ADDRESSES: The mailing address for the clerk in this proceeding is: Commandant (G–M), U.S. Coast Guard, 2100 Second Street SW., Washington DC 20593–0001. Public docket USCG–2002–14134 is maintained by the Docket Management Facility, U.S. Department of Transportation, Room PL–401, 400 Seventh Street SW., Washington, DC 20590–0001. The Docket Management Facility office maintains a Web site, *http://dms.dot.gov,* and can be reached by telephone at 202–366–9329 or fax at 202–493–2251.

FOR FURTHER INFORMATION CONTACT: If you have questions on this notice call Robert Nelson, U.S. Coast Guard, (202) 267–0496, *rnelson@comdt.uscg.mil.*

SUPPLEMENTARY INFORMATION: *Receipt of application; determination.* On November 25, 2002, the Coast Guard and MARAD received an application from Port Pelican LLC, Suite 2700, 1111 Bagby, Houston, Texas 77002 for all Federal authorizations required for a license to own, construct and operate a deepwater port off the coast of Louisiana. On December 16, 2002, we determined that the application appears to contain all required information. The application and related documentation supplied by the applicant (except for certain protected information specified in 33 U.S.C. 1513) may be viewed in the public docket (*see* ADDRESSES).

Background. According to the Deepwater Port Act of 1974, as amended (the Act, 33 U.S.C. 1501 *et seq.*), a deepwater port is a fixed or floating manmade structure other than a vessel, or a group of structures, located beyond the territorial sea and off the coast of the U.S., used or intended for use as a port or terminal for the transportation, storage, and further handling of oil for transportation to any State. The Act was most recently amended by the Maritime Transportation Security Act of 2002 (MTSA, Public Law 107–295), which extends the deepwater port definition to include natural gas facilities .

The Deepwater ports must be licensed, and the Act provides that a license applicant submit detailed plans for its facility to the Secretary of Transportation, along with its application. The Secretary has delegated the processing of deepwater port applications to the Coast Guard and MARAD. The Act allows 21 days following receipt of the application to determine if it contains all required information. If it does, we must publish a notice of application in the Federal Register and summarize the plans. This notice is intended to meet those requirements of the Act and to provide general information about the procedure that will be followed in considering the application.

Application procedure. We consider the application on its merits. Under the Act, we have 240 days from the date this notice is published to hold at least one public hearing, which is your opportunity to submit written or oral comment on the application. We will publish a separate **Federal Register** notice to notify you of any hearing we decide to hold. At least one hearing must be held in each adjacent coastal state. Pursuant to 33 U.S.C. 1508, we designate Louisiana as an adjacent coastal state. Other states may apply for adjacent coastal state status in accordance with 33 U.S.C. 1508(a)(2). After the last public hearing, Federal agencies have 45 days in which to comment to us on the application, and approval or denial of the application must follow within 90 days after the last public hearing. Details of the application process are described in 33 U.S.C. 1504 and in 33 CFR part 148.

The present application involves a proposed liquefied natural gas (LNG) facility. As such, MTSA excepts the application from the restrictions of 33 U.S.C. 1504(d) (1)–(3) and 33 U.S.C. 1504(i) (1)–(3). While this permits submission and consideration of competing applications for the same ''application area'', there may still be practical restrictions from a navigation safety standpoint with regard to the proximity of multiple deepwater ports.

We will review the application under the current deepwater port regulations published in 33 CFR part 148. On May 30, 2002 (67 FR 37920) the Coast Guard published a Notice of Proposed Rulemaking (NPRM) indicating its intent to revise those regulations. Public comments have been received in response to the NPRM and we will consider those comments prior to adopting revised regulations. In addition, MTSA mandates that we revise existing deepwater port regulations as soon as practicable to implement extension of deepwater port regulations to natural gas. It also allows for the issuance of an interim final rule without public notice and comment. Thus, the current regulations may be amended before we have fully processed the application. In that event, the amended regulations will govern further processing of the application as soon as they take effect.

Summary of the application. The application plan calls for construction of the Port Pelican Deepwater Port and associated anchorage in an area situated in the Gulf of Mexico approximately 36 miles south southwest of Fresh Water City, Louisiana, in Vermilion Block 140 with a safety zone extending into part of Vermilion Block 139.

The Port Pelican Project (the Project) will deliver natural gas to the United States Gulf Coast using existing gas supply and gathering systems in the Gulf of Mexico and southern Louisiana. Gas will then be delivered to shippers using the national pipeline grid through interconnections with major interstate and intrastate pipelines.

The Project consists of the Port Pelican Terminal (the Terminal), an LNG receiving, storage and regasification facility and the Pelican Interconnector Pipeline (PIPL) to transport the gas to the existing offshore gas gathering system.

The Project will consist of two concrete gravity based structure (GBS) units fixed to the seabed, which will include integral LNG storage tanks,

support deck mounted LNG receiving and vaporization equipment and utilities, berthing accommodations for LNG carriers, facilities for delivery of natural gas to a pipeline transportation system, and personnel accommodations.

The Terminal will be able to receive the largest LNG carriers in service or on order in 2002. LNG carrier arrival frequency will be planned to match specified terminal gas delivery rates. All marine systems, communication, navigation aids and equipment necessary to conduct safe LNG carrier operations and receiving of product during specified atmospheric and sea states will be provided at the port.

The regasification process consists of lifting the LNG from storage tanks, pumping the cold liquid to pipeline pressure, vaporization across heat exchanging equipment and delivery through custody transfer metering to the gas pipeline network. No gas conditioning is required for the Terminal since the incoming LNG will be pipeline quality.

A 42-inch diameter offshore Pelican Interconnector Pipeline, 37 nautical miles in length, will be constructed as part of the Pelican Project. The PIPL will transport gas from the Terminal to a point near the Tiger Shoal Platform ''A'' where it will connect to the Henry-Floodway Gas Gathering System (HFGGS). The HFGGS will deliver the gas to the onshore U.S. gas pipeline network.

The Terminal will be constructed in two phases. Phase I includes the installation of two GBS units with internal storage tanks and facilities for LNG offloading, and vaporization capability to deliver a peal 1.0 billion standard cubic feet per day (SCFD) of natural gas to the pipeline system. Additional vaporization equipment and associated support equipment and facilities will be installed during Phase II to increase the facility vaporization and send out rate to 2.0 billion SCFD peak.

Dated: December 20, 2002.

Paul J. Pluta,

Rerad Admiral, U.S. Coast Guard, Assistant Commandant for Marine Safety, Security and Environmental Protection.

Raymond R. Barberesi,

Director, Office of Ports and Domestic Shipping, U.S. Maritime Administration.

[FR Doc. 02–32831 Filed 12–24–02; 11:04 am]

BILLING CODE 4910–15–P

DEPARTMENT OF TRANSPORTATION

Coast Guard

[USCG–2002–14078]

Great Lakes Pilotage Advisory Committee

AGENCY: Coast Guard, (DOT).

ACTION: Notice of meetings.

SUMMARY: The Great Lakes Pilotage Advisory Committee (GLPAC) and its Subcommittee on Technology will meet to discuss various issues relating to pilotage on the Great Lakes. The meeting will be open to the public.

DATES: The Subcommittee will meet on Thursday, January 30, 2003, from 1 p.m. to 3 p.m. GLPAC will meet on Thursday, January 30, 2003, from 3 p.m. to 5:30 p.m. and on Friday, January 31, 2003, from 8:30 a.m. to 4 p.m. The annual public workshop will be held from 2 to 4 p.m. as part of the GLPAC meeting. The meeting may close early if all business is finished. Written material and requests to make oral presentations should reach the Coast Guard on or before January 24, 2003. Requests to have a copy of your material distributed to each member of the committee should reach the Coast Guard on or before January 24, 2003.

ADDRESSES: GLPAC will meet in Room B–1 of the Anthony J. Celebrezze Federal Building at 1240 East Ninth Street, Cleveland, OH 44199–2060. Send written material and requests to make oral presentations to Margie Hegy, Commandant (G-MW), U.S. Coast Guard Headquarters, 2100 Second Street SW., Washington, DC 20593–0001. This notice is available on the Internet at *http://dms.dot.gov.*

FOR FURTHER INFORMATION CONTACT: Margie Hegy, Executive Director of GLPAC, telephone (202) 267–0415, fax (202) 267–4700.

SUPPLEMENTARY INFORMATION: Notice of the meeting is given under the Federal Advisory Committee Act, 5 U.S.C. App. 2.

Agenda of Meetings

Subcommittee on Technology. The agenda includes the following:

(1) Leasing versus purchasing of portable piloting units (PPU's).

(2) Wireless internet connection as a solution to cell phone dead zones in the Great Lakes.

Great Lakes Pilotage Advisory Committee (GLPAC). The agenda includes the following:

(1) Swearing in new members

(2) Report on Bridge Hour Study.

(3) Report on Pilotage Office Relocation Study.

(4) Progress report from Technology Subcommittee.

(5) U.S. Army Corp of Engineers' Great Lakes Navigation Study from the ports' perspective.

(6) New Ratemaking Methodology.

(7) Discussion and selection of 7th GLPAC Member to recommend to the Secretary for appointment.

(8) American Great Lakes Ports Association Proposal for the ''Reorganization and Modernization of U.S. Pilotage Services on the Great Lakes''.

(9) Open workshop for public comments/questions on the Coast Guard's Great Lakes Pilotage Program.

Procedural

The meetings are open to the public. Please note that the meetings may close early if all business is finished. At the Chair's discretion, members of the public may make oral presentations during the meeting. If you would like to make an oral presentation at the meeting, please notify the Executive Director no later than January 24, 2003. Written material for distribution at the meeting should reach the Coast Guard no later than January 24, 2003. If you would like a copy of your material distributed to each member of the committee in advance of the meeting, please submit 10 copies to Margie Hegy at the address in the **ADDRESSES** section no later than January 20, 2003.

Information on Services for Individuals with Disabilities

For information on facilities or services for individuals with disabilities or to request special assistance at the meeting, contact the Executive Director as soon as possible.

Dated: December 20, 2002.

Paul J. Pluta,

Rear Admiral, U.S. Coast Guard, Assistant Commandant for Marine Safety, Security and Environmental Protection.

[FR Doc. 02–32725 Filed 12–26–02; 8:45 am]

BILLING CODE 4910–15–P

DEPARTMENT OF TRANSPORTATION

Federal Aviation Administration (FAA)

Notice of Opportunity for Public Comment on Federally Obligated Property Release at Nashville International Airport, Nashville, TN

AGENCY: Federal Aviation Administration (FAA), DOT.

ACTION: Notice.

SUMMARY: Under the provisions of Title 49, U.S.C. Section 47153(c), notice is

being given that the FAA is considering a request from the Metropolitan Nashville Airport Authority to waive the requirement that a 0.52-acre parcel of federally obligated property, located at Nashville International Airport, be used for aeronautical purposes.

DATES: Comments must be received on or before January 27, 2003.

ADDRESSES: Comments on this notice may be mailed or delivered in triplicate to the FAA at the following address: Memphis Airports District Office, 3385 Airways Boulevard, Suite 302, Memphis, TN 38116–3841.

In addition, one copy of any comments submitted to the FAA must be mailed or delivered to Mr. Raul Regalado, President of the Metropolitan Nashville Airport Authority at the following address: One Terminal Drive, Suite 501, Nashville, TN 37214.

FOR FURTHER INFORMATION CONTACT: Cynthia K. Wills, Program Manage, Memphis Airports District Office, 3385 Airways Boulevard, Suite 302, Memphis, TN 38116–3841, (901) 544–3495 extension 16. the application may be reviewed in person at this same location.

SUPPLEMENTARY INFORMATION: The FAA is reviewing a request by Metropolitan Nashville Airport Authority to release 0.52 acres of federally obligated property at Nashville International Airport. The property will be purchased by the State of Tennessee Department of Transportation and used for the widening of Briley Parkway and changes to the I–40 intersection. The land is located along the eastern right of way of the Briley Parkway/I–40 intersection, located on the northwestern boundary of the Nashville International Airport. The net proceeds from the non-aeronautical use or the sale of this property will be used for airport purposes.

Any person may inspect the request in person at the FAA office listed above under **FOR FURTHER INFORMATION CONTACT.** In addition, any person may, upon request, inspect the request, notice and other documents germane to the request in person at the Metropolitan Nashville Airport Authority.

Dated: Issued in Memphis, Tennessee, on December 19, 2002.

LaVerne F. Reid,

Manager, Memphis Airports District office Southern Region.

[FR Doc. 02–32787 Filed 12–26–02; 8:45 am]

BILLING CODE 4910–13–M

DEPARTMENT OF TRANSPORTATION

Federal Aviation Administration

Agency Information Collection Activities Under OMB Review

AGENCY: Federal Aviation Administration (FAA), DOT.

ACTION: Notice.

SUMMARY: In compliance with the Paperwork Reduction Act of 1995 (44 U.S.C. 3501 *et seq.*), this notice announces that the Information Collection Requests (ICR) abstracted below have been forwarded to the Office of Management and Budget (OMB) for extension of the currently approved collections. The ICR describes the nature of the information collections and the expected burden. The Federal Register Notices with a 60-day comment period soliciting comments on the following collections of information were published as follows: 2120–0597 on June 12, 2002, page 40373, and 2120–0049 and 2120–0552 on September 19, 2002, page 59089.

DATES: Comments must be submitted on or before January 27, 2003. A comment to OMB is most effective if OMB receives it within 30 days of publication.

FOR FURTHER INFORMATION CONTACT: Judy Street on (202) 267–9895.

SUPPLEMENTARY INFORMATION:

Federal Aviation Administration (FAA)

1. Title: Application for Employment with the Federal Aviation Administration.

Type of Request: Extension of a currently approved collection.

OMB Control Number: 2120–0597.

Forms(s) FAA Form 27152.

Affected Public: A total of 50,000 applicants.

Abstract: This collection of information is necessary for gathering data concerning potential new hires for the FAA. The information will be used to evaluate the qualifications of applicants for a variety of positions. Without this information there would be no reliable means to accurately evaluate applicants' skills, knowledge, and abilities to perform the duties of these positions.

Estimated Annual Burden Hours: An estimated 75,000 hours annually.

2. Title: Agricultural Aircraft Operator Certificate Application.

Type of Request: Extension of a currently approved collection.

OMB Control Number: 2120–0049.

Forms(s): FAA Form 8710–3.

Affected Public: A total of 3,980 operators of agricultural aircraft.

Abstract: Standards have been established for the operation of agricultural aircraft for the dispensing of chemicals, pesticides, and toxic substances. The information collected demonstrates the applicant's compliance and eligibility for certification by the FAA.

Estimated Annual Burden Hours: An estimated 14,037 hours annually.

3. Title: Suspected Unapproved Parts Notification.

Type of Request: Extension of a currently approved collection.

OMB Control Number: 2120–0552.

Forms(s): FAA Form 8120–11.

Affected Public: A total of 400 manufacturers, repair stations, and aircraft operators.

Abstract: The information collected on FAA Form 8120–11 will be reported voluntarily by manufacturers, repair stations, aircraft owners/operators, and the general public who wish to report suspected ''unapproved'' parts to the FAA for review. The information will be used to determine if an ''unapproved'' part investigation is warranted.

Estimated Annual Burden Hours: An estimated 60 hours annually.

ADDRESSES: Send comments to the Office of Information and Regulatory Affairs, Office of Management and Budget, 725 17th Street, NW., Washington, DC 20503, Attention FAA Desk Officer.

Comments are invited on: Whether the proposed collection of information is necessary for the proper performance of the functions of the Department, including whether the information will have practical utility; the accuracy of the Department's estimates of the burden of the proposed information collection; ways to enhance the quality, utility and clarity of the information to be collected; and ways to minimize the burden of the collection of information on respondents, including the use of automated collection techniques or other forms of information technology.

Issued in Washington, DC, on December 19, 2002.

Judith D. Street,

FAA Information Collection Clearance Officer Standards and Information Division, APF–100.

[FR Doc. 02–32704 Filed 12–26–02; 8:45 am]

BILLING CODE 4910–13–M

DEPARTMENT OF TRANSPORTATION

Federal Aviation Administration

Notice of Intent To Rule on Application To Impose and Use the Revenue from a Passenger Facility Charge (PFC) at Texarkana Regional Airport, Texarkana, AR

AGENCY: Federal Aviation Administration (FAA), DOT.

ACTION: Notice of intent to rule on application.

SUMMARY: The FAA proposes to rule and invites public comment on the application to impose and use the revenue from a PFC at Texarkana Regional Airport under the provisions of the Aviation Safety and Capacity Expansion Act of 1990 (Title IX of the Omnibus Budget Reconciliation Act of 1990) (Pub. L. 101–508) and part 158 of the Federal Aviation Regulations (14 CFR part 158).

DATES: Comments must be received on or before January 27, 2003.

ADDRESSES: Comments on this application may be mailed or delivered in triplicate copies to the FAA at the following address: Mr. G. Thomas Wade, Federal Aviation Administration, Southwest Region, Airports Division, Planning and Programming Branch, ASW–611, Fort Worth, Texas 76193–0610.

In addition, one copy of any comments submitted to the FAA must be mailed or delivered to Mr. Steven Lubbert, Manager of Texarkana Regional Airport at the following address: Manager, Texarkana Airport Authority, 201 Airport Drive, Texarkana, AR 71854.

Air carriers and foreign air carriers may submit copies of the written comments previously provided to the Airport under Section 158.23 of Part 158.

FOR FURTHER INFORMATION CONTACT: Mr. G. Thomas Wade, Federal Aviation Administration, Southwest Region, Airports Division, Planning and Programming Branch, ASW–611, Fort Worth, Texas 76193–0610, (817) 222–5613.

The application may be reviewed in person at this same location.

SUPPLEMENTARY INFORMATION: The FAA proposes to rule and invites public comment on the application to impose and use the revenue from a PFC at Texarkana Regional Airport under the provisions of the Aviation Safety and Capacity Expansion Act of 1990 (Title IX of the Omnibus Budget Reconciliation Act of 1990) (Pub. L. 101–508) and Part 158 of the Federal Aviation Regulations (14 CFR Part 158).

On December 16, 2002 the FAA determined that the application to impose and use the revenue from a PFC submitted by the Airport was substantially complete within the requirements of § 158.25 of Part 158. The FAA will approve or disapprove the application, in whole or in part, no later April 4, 2003.

The following is a brief overview of the application.

Level of the proposed PFC: $4.50.

Proposed charge effective date: September 1, 2005.

Proposed charge expiration date: August 1, 2006.

Total estimated PFC revenue: $98,250.

PFC application number: 03–05–C–00–TXK.

Brief description of proposed project(s):

Projects To Impose and Use PFC'S

1. Rehabilitate Runway 13/31 and Taxiway C.

Proposed class or classes of air carriers to be exempted from collecting PFC's: None.

Any person may inspect the application in person at the FAA office listed above under **FOR FURTHER INFORMATION CONTACT:** and at the FAA regional Airports office located at: Federal Aviation Administration, Southwest Region, Airports Division, Planning and Programming Branch, ASW–610, 2601 Meacham Blvd., Fort Worth, Texas 76137–4298.

In addition, any person may, upon request, inspect the application, notice and other documents germane to the application in person at Texarkana Regional Airport.

Issued in Fort Worth, Texas on December 17, 2002.

Joseph G. Washington,

Acting Manager, Airports Division.

[FR Doc. 02–32703 Filed 12–26–02; 8:45 am]

BILLING CODE 4910–13–M

DEPARTMENT OF TRANSPORTATION

Federal Motor Carrier Safety Administration

[FMCSA Docket No. FMCSA–2002–13294]

The Application by the Weirton Steel Corporation for Exemption From the Federal Motor Carrier Safety Regulations (FMCSRs)

AGENCY: Federal Motor Carrier Safety Administration (FMCSA), (DOT).

ACTION: Notice of application for exemption; request for comments.

SUMMARY: The FMCSA announces that the agency has received an application from the Weirton Steel Corporation (Weirton) for an exemption from all of the FMCSRs applicable to the operation of commercial motor vehicles in interstate commerce. The company believes that its safety management controls and its safety performance record suggest that it would achieve a level of safety equivalent to or greater than that achieved by complying with the applicable safety regulations. The exemption, if granted, would preempt inconsistent State and local requirements applicable to interstate commerce.

DATES: We must receive your comments on or before January 27, 2003.

ADDRESSES: You can mail or hand deliver comments to the U.S. Department of Transportation, Dockets Management Facility, Room PL'401, 400 Seventh Street, SW., Washington, DC 20590'0001. You can also submit comments at *http://dmses.dot.gov.* Please include the docket number that appears in the heading of this document. You can examine and copy this document and all comments received at the same Internet address or at the Dockets Management Facility from 9 a.m. to 5 p.m., e.t., Monday through Friday, except Federal holidays. If you want to know that we received your comments, please include a self-addressed, stamped postcard.

FOR FURTHER INFORMATION CONTACT: Mr. Larry W. Minor, Office of Bus and Truck Standards and Operations, (202) 366–4009, Federal Motor Carrier Safety Administration, 400 Seventh Street, SW., Washington, DC. 20590–0001. Office hours are from 7:45 a.m. to 4:15 p.m., e.t., Monday through Friday, except Federal holidays.

SUPPLEMENTARY INFORMATION:

Background

Sections 31315 and 31136 of title 49 of the United States Code (U.S.C.) provide the FMCSA with authority to grant exemptions from the Federal Motor Carrier Safety Regulations (FMCSRs). An exemption provides relief from one or more FMCSRs to a person or class of persons subject to the regulations. An exemption provides relief for up to two years and may be renewed. Sections 31315 and 31136(e) of 49 U.S.C. require the agency to consider whether the terms and conditions for the exemption would achieve a level of safety that is equivalent to, or greater than, the level of safety that would be obtained by complying with the regulations when evaluating applications for exemptions.

The regulations at 49 CFR part 381 establish the procedures to be followed to apply for exemptions from the FMCSRs, and the provisions used to process them.

The FMCSA must publish a notice in the **Federal Register** for each exemption requested, explain the request that has been filed; provide the public with an opportunity to inspect the safety analysis and any other relevant information known to the agency; and request public comment on the exemption. When granting a request for an exemption, the agency must publish a notice in the **Federal Register** identifying the person or class of persons who will receive the exemption, the provisions from which the person will be exempt, the effective period and all terms and conditions of the exemption. The terms and conditions established by the FMCSA must ensure that the exemption will likely achieve a level of safety that is equivalent to, or greater than, the level that would be achieved by complying with the regulation.

Weirton's Application for an Exemption

Weirton submitted a request for exemptions from all the safety requirements of Subchapter B of Chapter III, Title 49 of the Code of Federal Regulations, commonly referred to as the FMCSRs. A copy of the application is in the docket listed in the heading of this notice.

According to the application, Weirton's 44 drivers transport steel coils between the company's mill and its warehouse. The maximum distance the coils are transported is approximately 6 miles. From the warehouse, an outside carrier transports the coils to the customers.

Furthermore, Weirton asserts that its drivers travel primarily under ''urban'' conditions with traffic lights at almost every corner. The terrain is flat and the posted speed limit is 25 mph. In addition, the drivers work an 8-hour shift with an average of 3 hours of driving time during the shift. The company has operated in the city of Weirton since 1909. The application indicates that no company official or union official is aware of any fatigue-related accidents involving the company's drivers.

Weirton believes that in order to comply with Federal safety regulations, the company must hire more drivers. The company requests the exemption because its safety management controls and safety performance suggest that the Federal safety regulations are not necessary for their operations. Weirton believes it is capable of achieving an equivalent or greater level of safety through its management practices.

Request for Comments

In accordance with 49 U.S.C. 31315(b)(4) and 31136(e), FMCSA requests public comment from all interested parties on Weirton's application for an exemption from all of the safety requirements of Subchapter B to Chapter III, title 49 of the CFR. The agency may grant or deny the application based on the comments received, and any other relevant information that is available to the agency.

Issued on: December 20, 2002.

Annette M. Sandberg,

Deputy Director.

[FR Doc. 02–32785 Filed 12–26–02; 8:45 am]

BILLING CODE 4910–EX–P

DEPARTMENT OF TRANSPORTATION

National Highway Traffic Safety Administration

[Docket No. NHTSA 2001–10773]

Reports, Forms and Record Keeping Requirements Agency Information Collection Activity Under OMB Review

AGENCY: National Highway Traffic Safety Administration, DOT.

ACTION: Notice.

SUMMARY: In compliance with the Paperwork Reduction Act of 1995 (44 U.S.C. 3501 *et seq.*), this notice announces that the Information Collection Request (ICR) abstracted below has been forwarded to the Office of Management and Budget (OMB) for review and comment. The ICR describes the nature of the information collections and their expected burden. The **Federal Register** Notice with a 60-day comment period was published on August 9, 2002 [Vol. 67 FR 51925].

DATES: Comments must be submitted on or before January 27, 2003.

FOR FURTHER INFORMATION CONTACT: George Person at the National Highway Traffic Safety Administration, Office of Defects Investigation, 202–366–5210, 400 Seventh Street, SW., Room 5326, Washington, DC 20590.

SUPPLEMENTARY INFORMATION: *Agency:* National Highway Traffic Safety Administration.

Title: Reporting of Information About Foreign Safety Recalls and Campaigns Related to Potential Defects.

OMB Number: 2127–NEW.

Type of Request: New Collection.

Abstract: On October 11, 2001, NHTSA published a Final Rule (67 FR 63295) implementing section 3(a) of the Transportation Recall Enhancement, Accountability, and Documentation (TREAD) Act, Pub. L. 106–414, which requires a manufacturer of motor vehicles or motor vehicle equipment to report to NHTSA whenever it decides to conduct a safety recall or other safety campaign in a foreign country, or has been directed to do so by a foreign government, covering vehicles or equipment that are identical or substantially similar to vehicles or equipment sold or offered for sale in the United States. The obligation to report this information was effective on the day that the TREAD Act was signed into law, November 1, 2000. Since that date, NHTSA has, in fact, received some notifications of foreign safety campaigns being conducted.

Affected Public: The TREAD Act requires all manufacturers of motor vehicles and motor vehicle equipment who sell vehicles or equipment in the United States, and who also sell or plan to sell vehicles outside the United States, to comply with these reporting requirements. We estimate that there are a total of 23,500 manufacturers who sell vehicles or equipment in the United States. Of these, we estimate that fewer than 70 vehicle manufacturers will need to comply with the reporting requirements.

Estimated Total Annual Burden: The annual burden is estimated to be 2,060 hours.

ADDRESSES: Send comments, within 30 days, to the Office of Information and Regulatory Affairs, Office of Management and Budget, 725 17th Street, NW., Washington, DC 20503, Attention NHTSA Desk Officer.

Comments are invited on: Whether the proposed collection of information is necessary for the proper performance of the functions of the Agency, including whether the information will have practical utility; the accuracy of the Agency's estimate of the burden of the proposed information collection; ways to enhance the quality, utility and clarity of the information to be collected; and ways to minimize the burden of the collection of information on respondents, including the use of automated collection techniques or other forms of information technology.

A comment to OMB is most effective if OMB receives it within 30 days of publication.

Kenneth N. Weinstein,

Associate Administrator for Enforcement.

[FR Doc. 02–32624 Filed 12–26–02; 8:45 am]

BILLING CODE 4910–59–P

DEPARTMENT OF TRANSPORTATION

Surface Transportation Board

[STB Docket No. MC–F–20995]

Peter Pan Bus Lines Trust—Purchase and Acquisition of Control—Arrow Acquisition, LLC, Bonanza Acquisition, LLC, Maine Line, LLC, Pawtuxet Valley, LLC, Peter Pan Boston, LLC, and Peter Pan Bus Lines, Inc.

AGENCY: Surface Transportation Board.

ACTION: Notice Tentatively Approving Finance Transaction.

SUMMARY: In an application filed under 49 U.S.C. 14303, Peter Pan Bus Lines Trust (Peter Pan Trust), a noncarrier, seeks to purchase, through its newly formed limited liability companies—Arrow Line Acquisition, LLC (Arrow), Bonanza Acquisition, LLC (Bonanza), Maine Line, LLC (Maine), Pawtuxet Valley, LLC (Pawtuxet), and Peter Pan Boston, LLC (Peter Pan Boston)—the operating properties of five motor passenger carriers [1] and thereupon to control these five carriers as well as Peter Pan Bus Lines, Inc. (Peter Pan), a motor passenger carrier. Persons wishing to oppose the application must follow the rules at 49 CFR 1182.5 and 1182.8. The Board has tentatively approved the transaction, and, if no opposing comments are timely filed, this notice will be the final Board action.

DATES: Comments must be filed by February 10, 2003. Applicant may file a reply by February 25, 2003. If no comments are filed by February 10, 2003, the approval is effective on that date.[2]

ADDRESSES: Send an original and 10 copies of any comments referring to STB Docket No. MC–F–20995 to: Surface Transportation Board, 1925 K Street, NW., Washington, DC 20423–0001. In addition, send one copy of any comments to applicants' representatives: Jeremy Kahn, Kahn and Kahn, 1730 Rhode Island Avenue, NW., Suite 810, Washington, DC 20036; and David H. Coburn, Steptoe & Johnson, LLP, 1330 Connecticut Avenue, NW., Washington, DC 20036.

FOR FURTHER INFORMATION CONTACT: Beryl Gordon, (202) 565–1600. [Federal Information Relay Service (FIRS) for the hearing impaired: 1–800–877–8389.]

SUPPLEMENTARY INFORMATION: Peter Pan Trust is a Massachusetts Business Trust, whose only asset is the stock of Peter Pan, a motor passenger carrier that holds federally issued operating authority in Docket No. MC–61016.

Applicants state that Peter Pan recently formed Arrow, Bonanza, Maine, Pawtuxet, and Peter Pan Boston and that these newly formed companies, together with Peter Pan, are parties to an asset purchase transaction in which the parties will acquire the motor coaches and other assets, including the operating authorities, of the five Coach-controlled carriers.[3] According to applicants, each of the companies will operate assets being acquired from these carriers. Applicants state that none of these newly formed acquiring companies had any operating revenues at the time of the filing of this application.

Applicants state that each of the five newly formed acquiring companies recently applied for certain federal operating authority from the Federal Motor Carrier Safety Administration (FMCSA).[4] Each new carrier will acquire the FMCSA authority of the corresponding acquired carrier, to the extent not included in the pending FMCSA applications, and, with the exception of Pawtuxet, they will acquire the intrastate operating authority of each corresponding carrier.

Under 49 U.S.C. 14303(b), we must approve and authorize a transaction we find consistent with the public interest, taking into consideration at least: (1) the effect of the transaction on the adequacy of transportation to the public; (2) the total fixed charges that result; and (3) the interest of affected carrier employees.

Applicants have submitted the information required by 49 CFR 1182.2, including information to demonstrate that the proposed transaction is consistent with the public interest under 49 U.S.C. 14303(b). Specifically, applicants have shown that the proposed transaction will have a positive effect on the adequacy of transportation to the public and will result in no increase in fixed charges and no changes in employment. *See* 49 CFR 1182.2(a)(7). Additional information may be obtained from applicants' representatives.

On the basis of the application, we find that the proposed transaction is consistent with the public interest and should be authorized. If any opposing comments are timely filed, this finding will be deemed vacated and, unless a final decision can be made on the record as developed, a procedural schedule will be adopted to reconsider the application. *See* 49 CFR 1182.6(c). If no opposing comments are filed by the expiration of the comment period, this decision will take effect automatically and will be the final Board action.

Board decisions and notices are available on our Web site at *''http://www.stb.dot.gov.''*

This decision will not significantly affect either the quality of the human environment or the conservation of energy resources.

It is ordered:

1. The proposed purchase and acquisition of control is approved and authorized, subject to the filing of opposing comments.

2. If timely opposing comments are filed, the findings made in this decision will be deemed vacated.

3. This decision will be effective on February 10, 2003, unless timely opposing comments are filed.

4. A copy of this notice will be served on: (1) The U.S. Department of Transportation, Federal Motor Carrier Safety Administration, 400 7th Street, SW., Room 8214, Washington, DC 20590; (2) the U.S. Department of Justice, Antitrust Division, 10th Street & Pennsylvania Avenue, NW., Washington, DC 20530; and (3) the U.S. Department of Transportation, Office of the General Counsel, 400 7th Street, SW, Washington, DC 20590.

Decided: December 19, 2002.

By the Board, Chairman Nober, Vice Chairman Burkes, and Commissioner Morgan.

Vernon A. Williams,

Secretary.

[FR Doc. 02–32568 Filed 12–26–02; 8:45 am]

BILLING CODE 4915–00–P

[1] The five motor passenger carriers being acquired are currently controlled by Coach USA, Inc. They are: The Arrow Line, Inc. (MC–1934), Bonanza Bus Lines, Inc. (MC–13028), Brunswick Transportation, Inc., d/b/a The Maine Line (MC–109495), Mini Coach of Boston, Inc. (MC–231090, and Pawtuxet Valley Coach Line, Inc. (MC–115432).

[2] In its application, Peter Pan Trust requests expedited handling of the application and requests that the Board publish its notice within 15 days to enable the parties to achieve and recognize the substantial business benefits of their transaction as soon as possible, and to minimize the ownership transition period between the agreement to acquire the assets and regulatory approval.

[3] Arrow will operate the assets of Arrow Line, Inc.; Bonanza will operate the assets of Bonanza Bus Lines, Inc.; Maine will operate the assets of Brunswick Transportation, Inc., d/b/a The Maine Line; Pawtuxet will operate the assets of Pawtuxet Valley Coach Line, Inc.; and Peter Pan Boston will operate the assets of Mini Coach of Boston, Inc.

[4] Applicants state that these newly formed companies filed applications for authority with FMCSA on November 10, 2002. All five applications seek charter and special operations authority. Bonanza and Peter Pan Boston also seek certain regular route authority, generally between Boston and New York. The assigned motor carrier docket numbers for the newly formed companies are: MC–448294 for Arrow; MC–448481 for Bonanza; MC–448293 for Maine; MC–448292 for Pawtuxet; and MC–448482 for Peter Pan Boston.

DEPARTMENT OF TRANSPORTATION

Surface Transportation Board

[STB Ex Parte No. 290 (Sub No. 5) (2003–1)]

Quarterly Rail Cost Adjustment Factor

AGENCY: Surface Transportation Board.

ACTION: Approval of rail cost adjustment factor.

SUMMARY: The Board has approved the rebased first quarter 2003 rail cost adjustment factor (RCAF) and cost index filed by the Association of American Railroads. As required by statute, the RCAF was rebased using the fourth quarter 2002 index value as the denominator and first quarter 2003 index value as the numerator (10/1/02 = 1.00). Rebasing is required every five years. The rebased first quarter 2003 RCAF (Unadjusted) is 0.996. The rebased first quarter 2003 RCAF (Adjusted) is 0.512. The rebased first quarter 2003 RCAF–5 is 0.495.

EFFECTIVE DATE: January 1, 2003.

FOR FURTHER INFORMATION CONTACT: H. Jeff Warren, (202) 565–1533. Federal Information Relay Service (FIRS) for the hearing impaired: 1–800–877–8339.

SUPPLEMENTARY INFORMATION: Additional information is contained in the Board's decision. To purchase a copy of the full decision, write to, call, or pick up in person from: D̄ 2 D̄ Legal, Suite 405, 1925 K Street, NW, Washington, DC 20006, phone (202) 293–7776. [Assistance for the hearing impaired is available through FIRS: 1–800–877–8339.]

This action will not significantly affect either the quality of the human environment or energy conservation.

Pursuant to 5 U.S.C. 605(b), we conclude that our action will not have a significant economic impact on a substantial number of small entities within the meaning of the Regulatory Flexibility Act.

Decided: December 19, 2002.

By the Board, Chairman Nober, Vice Chairman Burkes, and Commissioner Morgan.

Vernon A. Williams,

Secretary.

[FR Doc. 02–32712 Filed 12–26–02; 8:45 am]

BILLING CODE 4915–00–P

DEPARTMENT OF TRANSPORTATION

Surface Transportation Board

[STB Finance Docket No. 34295]

Airlake Terminal Railway Company—Acquisition and Operation Exemption—Rail Line of Empire Builder Investments Incorporated and Progressive Rail, Incorporated

Airlake Terminal Railway Company (ATRC), a noncarrier, has filed a verified notice of exemption under 49 CFR 1150.31 to acquire by lease and to operate approximately 2.35 miles of railroad right-of-way and trackage, referred to as the Lakeville trackage, at transloading and storage facilities owned by Empire Builder Investments Incorporated at Airlake Industrial Park, Lakeville, MN. Progressive Rail, Incorporated (Progressive), a rail carrier, owns the Lakeville trackage and currently operates it as switching track, interchanging traffic at a connection with the Canadian Pacific Rail System. ATRC states that the Lakeville trackage would constitute its entire line of railroad, and that ATRC will operate it as a rail common carrier.

ATRC certifies that its projected revenues will not exceed those that would qualify it as a Class III rail carrier.

The transaction was scheduled to be consummated on or shortly after December 16, 2002, (7 days after the exemption was filed).

If the notice contains false or misleading information, the exemption is void *ab initio.* Petitions to revoke the exemption under 49 U.S.C. 10502(d) may be filed at any time. The filing of a petition to revoke will not automatically stay the transaction.

An original and 10 copies of all pleadings, referring to STB Finance Docket No. 34295, must be filed with the Surface Transportation Board, 1925 K Street NW., Washington, DC 20423–0001. In addition, one copy of each pleading must be served on Thomas F. McFarland, 208 South LaSalle Street, Suite 1890, Chicago, IL 60604–1194.

Board decisions and notices are available on our Web site at *http://www.stb.dot.gov.*

Decided: December 17, 2002.

By the Board, David M. Konschnik, Director, Office of Proceedings.

Vernon A. Williams,

Secretary.

[FR Doc. 02–32255 Filed 12–26–02; 8:45 am]

BILLING CODE 4915–00–P

DEPARTMENT OF THE TREASURY

Submission for OMB Review; Comment Request

December 19, 2002.

The Department of Treasury has submitted the following public information collection requirement(s) to OMB for review and clearance under the Paperwork Reduction Act of 1995, Public Law 104–13. Copies of the submission(s) may be obtained by calling the Treasury Bureau Clearance Officer listed. Comments regarding this information collection should be addressed to the OMB reviewer listed and to the Treasury Department Clearance Officer, Department of the Treasury, Room 11000, 1750 Pennsylvania Avenue, NW., Washington, DC 20220.

DATES: Written comments should be received on or before January 27, 2003 to be assured of consideration.

Financial Management Service (FMS)

OMB Number: 1510–0042.

Form Number: SF 1055.

Type of Review: Extension.

Title: Claims Against the U.S. for Amounts Due in Case of a Deceased Credit.

Description: This form is required to determine who is entitled to funds of a deceased Postal Savings depositor or deceased awardholder. The form properly completed with supporting documents enables this office to decide who is legally entitled to payment.

Respondents: Individuals or households.

Estimated Number of Respondents: 400.

Estimated Burden Hours Per Respondent: 1 hour.

Frequency of Response: Other (as needed).

Estimated Total Reporting Burden: 400 hours.

Clearance Officer: Juanita Holder, Financial Management Service, 3700 East West Highway, Room 135, PGP II, Hyattsville, MD 20782.

OMB Reviewer: Joseph F. Lackey, Jr. (202) 395–7316, Office of Management and Budget, Room 10235, New Executive Office Building, Washington, DC 20503.

Mary A. Able,

Departmental Reports Management Officer.

[FR Doc. 02–32636 Filed 12–26–02; 8:45 am]

BILLING CODE 4810–35–P

DEPARTMENT OF THE TREASURY

Submission for OMB Review; Comment Request

December 18, 2002.

The Department of Treasury has submitted the following public information collection requirement(s) to OMB for review and clearance under the Paperwork Reduction Act of 1995, Public Law 104–13. Copies of the submission(s) may be obtained by calling the Treasury Bureau Clearance Officer listed. Comments regarding this information collection should be addressed to the OMB reviewer listed and to the Treasury Department Clearance Officer, Department of the Treasury, Room 11000, 1750 Pennsylvania Avenue, NW., Washington, DC 20220.

DATES: Written comments should be received on or before January 27, 2003 to be assured of consideration.

Internal Revenue Service (IRS)

OMB Number: 1545–0013.

Form Number: IRS Form 56.

Type of Review: Extension.

Title: Notice Concerning Fiduciary Relationship.

Description: Form 56 is used to inform the IRS that a person is acting for another person in a fiduciary capacity so that the IRS may mail tax notices to the fiduciary concerning the person for whom he/she is acting. The data is used to ensure that the fiduciary relationship is established or terminated and to mail or discontinue mailing designated to the fiduciary.

Respondents: Business or other for-profit, individuals or households.

Estimated Number of Respondents/Recordkeepers: 25,000.

Estimated Burden Hours Per Respondent/Recordkeeper:

Recordkeeping—8 min.
Learning about the law or the form—32 min.
Preparing the form—46 min.
Copying, assembling, and sending the forms to the IRS—15 min.

Frequency of Response: On occasion.

Estimated Total Reporting/Reporting Burden: 292,800 hours.

OMB Number: 1545–0143.

Form Number: IRS Form 2290.

Type of Review: Extension.

Title: Heavy Highway Vehicle Use Tax Return.

Description: Form 2290 is used to compute and report the tax imposed by section 4481 on the highway use of certain motor vehicles. The information is used to determine whether the taxpayer has paid the correct amount of tax.

Respondents: Business or other for-profit.

Estimated Number of Respondents/Recordkeepers: 440,000.

Estimated Burden Hours Per Respondent/Recordkeeper:

Recordkeeping—42 hr., 4 min.
Learning about the law or the form—18 min.
Preparing, copying, and sending the form to the IRS—58 min.

Frequency of Response: Annually.

Estimated Total Reporting/Recordkeeping Burden: 17,443,600 hours.

OMB Number: 1545–0430.

Form Number: IRS Form 4810.

Type of Review: Extension.

Title: Request for Prompt Assessment under Internal Revenue Code Section 6501(d).

Description: Form 4810 is used to request a prompt assessment under Internal Revenue Code (IRC) Section 6501(d). IRS uses this form to locate the return to expedite processing of the taxpayer's request.

Respondents: Business or other for-profit, individual or households, farms, Federal Government.

Estimated Number of Respondents: 4,000.

Estimated Burden Hours Per Respondent: 30 minutes.

Frequency of Response: On occasion, Other (as necessary).

Estimated Total Reporting Burden: 2,000 hours.

OMB Number: 1545–0666.

Form Number: IRS Form 673.

Type of Review: Revision.

Title: Statement for Claiming Benefits Provided by Section 911 of the Internal Revenue Code.

Description: Form 673 is completed by a citizen of the United States and is furnished to his or her employer in order to exclude from income tax withholding all or part of the wages paid the citizen for services performed outside the United States.

Respondents: Individuals or households.

Estimated Number of Respondents/Recordkeepers: 50,000.

Estimated Burden Hours Per Respondent/Recordkeeper:

Recordkeeping—33 min.
Learning about the law or the form—7 min.
Preparing the form—24 min.
Copying, assembling, and sending the form to the IRS—20 min.

Frequency of Response: On occasion.

Estimated Total Reporting/Recordkeeping Burden: 71,000 hours.

OMB Number: 1545–1221.

Regulation Project Number: EE–147–87 Final.

Type of Review: Extension.

Title: Qualified Separate Lines of Business.

Description: The affected public includes employers who maintain qualified employee retirement plans. Where applicable, the employer must furnish notice to the IRS that the employer treats itself as operating qualified separate lines of business and some may request an IRS determination that such lines satisfy administrative scrutiny.

Respondents: Business or other for-profit.

Estimated Number of Respondents/Recordkeepers: 253.

Estimated Burden Hours Per Respondent/Recordkeeper: 3 hours, 27 minutes.

Frequency of Response: Annually.

Estimated Total Reporting/Recordkeeping Burden: 899 hours.

OMB Number: 1545–1799.

Notice Number: Notice 2002–69.

Type of Review: Extension.

Title: Interest Rates and Appropriate Foreign Loss Payment Patterns for Determining the Qualified Insurance Income of Certain Controlled Corporations under Section 954(i).

Description: Notice 2002–69 provides guidance on how to determine the foreign loss payment patterns a foreign insurance company owned by U.S. shareholders for purposes .of determining the amount of investment income earned by the insurance company that is not treated as Subpart F income under section 954(i).

Respondents: Business or other for-profit.

Estimated Number of Respondents/Recordkeepers: 300.

Estimated Burden Hours Per Respondent/Recordkeeper: 1 hour.

Estimated Total Reporting/Recordkeeping Burden: 300 hours.

Clearance Officer: Glenn Kirkland (202) 622–3428, Internal Revenue Service, Room 6411–03, 1111 Constitution Avenue, NW., Washington, DC 20224.

OMB Reviewer: Joseph F. Lackey, Jr. (202) 395–7316, Office of Management and Budget, Room 10235, New Executive Office Building, Washington, DC 20503.

Lois K. Holland,

Departmental Reports Management Officer.

[FR Doc. 02–32637 Filed 12–26–02; 8:45 am]

BILLING CODE 4830–01–P

DEPARTMENT OF THE TREASURY

Community Development Financial Institutions Fund

Open Meeting of the Community Development Advisory Board

AGENCY: Community Development Financial Institutions Fund, Department of the Treasury.

ACTION: Notice of open meeting.

SUMMARY: This notice announces the next meeting of the Community Development Advisory Board, which provides advice to the Director of the Community Development Financial Institutions Fund.

DATES: The next meeting of the Community Development Advisory Board will be held on Tuesday, January 21, 2003, beginning at 1 p.m., and on Wednesday, January 22, 2003, beginning at 9 a.m.

ADDRESSES: The Community Development Advisory Board meeting will be held at the offices of the Treasury Executive Institute, located at 801 9th Street, NW., Washington, DC.

FOR FURTHER INFORMATION, CONTACT: The Office of External Affairs of the Community Development Financial Institutions Fund (the ''Fund''), U.S. Department of Treasury, 601 13th Street, NW., Suite 200 South, Washington, DC 20005, (202) 622–9046 (this is not a toll free number). Other information regarding the Fund and its programs may be obtained through the Fund's Web site at *http://www.cdfifund.gov.*

SUPPLEMENTARY INFORMATION: Section 104(d) of the Community Development Banking and Financial Institutions Act of 1994 (12 U.S.C. 4703(d)) established the Community Development Advisory Board (the ''Advisory Board''). The charter for the Advisory Board has been filed in accordance with the Federal Advisory Committee Act, as amended (5 U.S.C. App.), and with the approval of the Secretary of the Treasury.

The function of the Advisory Board is to advise the Director of the Fund (who has been delegated the authority to administer the Fund) on the policies regarding the activities of the Fund. The Fund is a wholly owned corporation within the Department of the Treasury. The Advisory Board shall not advise the Fund on the granting or denial of any particular application for monetary or non-monetary awards. The Advisory Board shall meet at least annually.

It has been determined that this document is not a major rule as defined in Executive Order 12291 and therefore regulatory impact analysis is not required. In addition, this document does not constitute a rule subject to the Regulatory Flexibility Act (5 U.S.C. Chapter 6). The next meeting of the Advisory Board, all of which will be open to the public, will be held at the offices of the Treasury Executive Institute, located at 801 9th Street, NW., Washington, DC, on Tuesday, January 21, 2003, beginning at 1 p.m., and on Wednesday, January 22, 2003, beginning at 9 a.m. The room will accommodate 20 members of the public. Seats are available on a first-come, first-served basis. Participation in the discussions at the meeting will be limited to Advisory Board members and Department of the Treasury staff. Anyone who would like to have the Advisory Board consider a written statement must submit it to the Fund, at the address of the Fund specified above in the **FOR FURTHER INFORMATION CONTACT** section, by 4 p.m., Monday, January 13, 2003.

The meeting will include a report from the Director on the activities of the CDFI Fund since the last Advisory Board meeting, including programmatic, fiscal and legislative initiatives for the years 2003 and 2004.

Authority: 12 U.S.C. 4703; Chapter X, Pub. L. 104–19, 109 Stat. 237.

Tony T. Brown,

Director, Community Development Financial Institutions Fund.

[FR Doc. 02–32648 Filed 12–26–02; 8:45 am]

BILLING CODE 4810–70–P

DEPARTMENT OF THE TREASURY

Office of the Comptroller of the Currency

Agency Information Collection Activities: Submission for OMB Review; Comment Request

AGENCY: Office of the Comptroller of the Currency (OCC), Treasury.

ACTION: Notice and request for comment.

SUMMARY: The OCC, as part of its continuing effort to reduce paperwork and respondent burden, invites the general public and other Federal agencies to take this opportunity to comment on a continuing information collection, as required by the Paperwork Reduction Act of 1995. An agency may not conduct or sponsor, and a respondent is not required to respond to, an information collection unless the information collection displays a currently valid OMB control number. The OCC is soliciting comment concerning its information collection titled, ''Fiduciary Activities of National Banks—12 CFR 9.'' The OCC also gives notice that it has sent the information collection to OMB for review and approval.

DATES: You should submit your comments to the OCC and the OMB Desk Officer by January 27, 2003.

ADDRESSES: You should direct comments to: Communications Division, Office of the Comptroller of the Currency, Public Information Room, Mailstop 1–5, Attention: 1557–0102, 250 E Street, SW., Washington, DC 20219. Due to delays in paper mail in the Washington area, commenters are encouraged to submit comments by fax or e-mail. Comments may be sent by fax to (202) 874–4448, or by e-mail to *regs.comments@occ.treas.gov.* You can inspect and photocopy the comments at the OCC's Public Information Room, 250 E Street, SW, Washington, DC 20219. You can make an appointment to inspect the comments by calling (202) 874–5043.

Joseph F. Lackey, Jr., OMB Desk Officer for the OCC, Office of Information and Regulatory Affairs, Office of Management and Budget, New Executive Office Building, Room 10235, Washington, DC 20503.

FOR FURTHER INFORMATION CONTACT: You can request additional information or a copy of the collection from Jessie Dunaway, OCC Clearance Officer, or Camille Dixon, (202) 874–5090, Legislative and Regulatory Activities Division, Office of the Comptroller of the Currency, 250 E Street, SW., Washington, DC 20219.

SUPPLEMENTARY INFORMATION: The OCC is proposing to extend OMB approval of the following information collection:

Title: Fiduciary Activities of National Banks '' 12 CFR 9.

OMB Number: 1557–0140.

Description: This submission covers an existing regulation and involves no change to the regulation or to the information collection. The OCC requests only that OMB extend its approval of the information collection.

Under 12 U.S.C. 92a, the OCC regulates the fiduciary activities of national banks, including the administration of collective investment funds. The requirements in 12 CFR Part 9 enable the OCC to perform its responsibilities relating to the fiduciary activities of national banks and collective investment funds. The collections of information in part 9 are found in §§ 9.8(b), 9.9(a) and (b), 9.17(a), 9.18(b)(1), 9.18(b)(6)(ii), 9.18(b)(6)(iv), and 9.18(c)(5) as follows:

Section 9.8(b) requires a national bank to maintain fiduciary records;

Section 9.9(a) and (b) require a national bank to note the results of a

fiduciary audit in the minutes of the board of directors;

Section 9.17(a) requires a national bank that wants to surrender its fiduciary powers to file with the OCC a certified copy of the resolution of its board of directors;

Section 9.18(b)(1) requires a national bank to establish and maintain each collective investment fund in accordance with a written plan;

Section 9.18(b)(1) also requires a national bank to make the plan available for public inspection and to provide a copy of the plan to any person who requests it;

Section 9.18(b)(6)(ii) requires a national bank to prepare a financial report of the fund;

Section 9.18(b)(6)(iv) requires a national bank to disclose the financial report to investors and other interested persons; and

Section 9.18(c)(5) requires a national bank to request OCC approval of special exemption funds.

Type of Review: Extension of a currently approved collection.

Affected Public: Businesses or other for-profit.

Estimated Number of Respondents: 842.

Estimated Total Annual Responses: 842.

Frequency of Response: On occasion.

Estimated Total Annual Burden: 9,414 hours.

Dated: December 20, 2002.

Mark J. Tenhundfeld,

Assistant Director, Legislative and Regulatory Activities Division.

[FR Doc. 02–32720 Filed 12–26–02; 8:45 am]

BILLING CODE 4810–33–P

DEPARTMENT OF THE TREASURY

Internal Revenue Service

[REG–209823–96]

Proposed Collection; Comment Request for Regulation Project

AGENCY: Internal Revenue Service (IRS), Treasury.

ACTION: Notice and request for comments.

SUMMARY: The Department of the Treasury, as part of its continuing effort to reduce paperwork and respondent burden, invites the general public and other Federal agencies to take this opportunity to comment on proposed and/or continuing information collections, as required by the Paperwork Reduction Act of 1995, Public Law 104–13 (44 U.S.C. 3506(c)(2)(A)). Currently, the IRS is soliciting comments concerning an existing final regulation, REG–209823–96 (TD 8791), Guidance regarding Charitable Remainder Trusts and Special Valuation Rules for Transfers of Interests and Trusts.

DATES: Written comments should be received on or before February 25, 2003 to be assured of consideration.

ADDRESSES: Direct all written comments to Glenn Kirkland, Internal Revenue Service, room 6411, 1111 Constitution Avenue NW., Washington, DC 20224.

FOR FURTHER INFORMATION CONTACT: Requests for additional information or copies of this regulation should be directed to Allan Hopkins, (202) 622–6665, or through the internet (Allan.M.Hopkins@irs.gov), Internal Revenue Service, room 6407, 1111 Constitution Avenue NW., Washington, DC 20224.

SUPPLEMENTARY INFORMATION: *Title:* Guidance Regarding Charitable Remainder Trusts and Special Valuation Rules for Transfers of Interests and Trusts.

OMB Number: 1545–1536.

Regulation Project Number: REG–209823–96.

Abstract: This regulation provides guidance relating to charitable remainder trusts and to special valuation rules for transfers of interests in trusts. Section 1.664–1(a)(7) of the regulation provides that either an independent trustee or qualified appraiser using a qualified appraisal must value a charitable remainder trust's assets that do not have an objective, ascertainable value.

Current Actions: There is no change to this existing regulation.

Type of Review: Extension of a currently approved collection.

Affected Public: Businesses or other for-profit organizations.

Estimated Number of Respondents: 150.

Estimated Time Per Respondent: 30 minutes.

Estimated Total Annual Burden Hours: 75.

The following paragraph applies to all of the collections of information covered by this notice:

An agency may not conduct or sponsor, and a person is not required to respond to, a collection of information unless the collection of information displays a valid OMB control number. Books or records relating to a collection of information must be retained as long as their contents may become material in the administration of any internal revenue law. Generally, tax returns and tax return information are confidential, as required by 26 U.S.C. 6103.

Request for Comments

Comments submitted in response to this notice will be summarized and/or included in the request for OMB approval. All comments will become a matter of public record. Comments are invited on: (a) Whether the collection of information is necessary for the proper performance of the functions of the agency, including whether the information shall have practical utility; (b) the accuracy of the agency's estimate of the burden of the collection of information; (c) ways to enhance the quality, utility, and clarity of the information to be collected; (d) ways to minimize the burden of the collection of information on respondents, including through the use of automated collection techniques or other forms of information technology; and (e) estimates of capital or start-up costs and costs of operation, maintenance, and purchase of services to provide information.

Approved: December 17, 2002.

Glenn Kirkland,

IRS Reports Clearance Officer.

[FR Doc. 02–32616 Filed 12–26–02; 8:45 am]

BILLING CODE 4830–01–P

DEPARTMENT OF VETERANS AFFAIRS

Veterans' Advisory Committee on Education; Notice of Meeting

The Department of veterans Affairs gives notice under Public Law 92–463 (Federal Advisory Committee Act) that the veterans' Advisory Committee on Education will meet on Monday, January 27, 2003, from 8:30 a.m. to 4 p.m. and Tuesday, January 28, 2003, from 8:30 a.m. to 12 p.m. The meeting will take place at the Department of Veterans Affairs, Room 542, 1800 G Street, NW., Washington, DC. The meeting is open to the public. The purpose of the committee is to provide advice to the Secretary of Veterans Affairs on the administration of education and training programs for veterans and servicepersons, reservists and dependents of veterans under Chapters 30, 32, 35, and 36, Title 38, and Chapter 1606 of Title 10, United States Code.

On January 27, the agenda topics for this meeting will include the Partnership for Veterans' Education, recent legislation, the Veterans' Education Outreach program, funding of State Approving Agencies, financial aid and the Montgomery GI Bill, electronic certification, accelerated payment procedures for ''high-tech training'', Education Liaison Representative

issues, transfer of GI Bill Benefits status and related issues that the committee members may choose to introduce. On January 28,the committee will discuss future meeting locations and topics, subcommittee formation and administration, and desirability of a committee Web site.

Any member of the public wishing to attend should contact Mr. Stephen Dillard or Mr. Michael Yunker, Department of Veterans Affairs, Education Service (225B), 810 Vermont Avenue, NW., Washington, DC 20420, at (202) 273–7187. Interested persons may attend, appear before, or file statements with the Committee. Statements, if in written form, may be filed before the meeting, or within 10 days after the meeting. Oral statements will be heard at 9:15 a.m., Tuesday, January 28, 2003.

Dated: December 18, 2002.

By Direction of the Secretary.

Nora E. Egan,

Committee Management Officer.

[FR Doc. 02–32626 Filed 12–26–02; 8:45 am]

BILLING CODE 8320–01–M

DEPARTMENT OF VETERANS AFFAIRS

National Commission on VA Nursing; Notice of Meeting

The Department of Veterans Affairs (VA) gives notice under Public Law 92–463 (Federal Advisory Committee Act) that the National Commission on VA Nursing will hold its fourth meeting on January 8–9, 2003, at the MGM Grand, 3799 Las Vegas Blvd., So. Las Vegas, NV 89109. On January 8, the meeting will begin at 9 a.m. and adjourn at 5 p.m. On January 9, the meeting will begin at 8 a.m. and adjourn at 2 p.m. The meeting is open to the public.

The purpose of the Commission is to provide advice and make recommendations to Congress and the Secretary of Veterans Affairs regarding legislative and organizational policy changes to enhance the recruitment and retention of nurses and other nursing personnel in VA. The Commission is required to submit to Congress and the Secretary of Veterans Affairs a report, not later than two years from May 8, 2002, on its findings and recommendations.

The Commission will meet to continue data analysis, update the work plan, finalize selection of sites for focus groups, review correspondence from VA staff, finalize issues paper, and review staffing data from VA facilities.

Members of the public may direct written questions or submit prepared statements for review by the Commission in advance of the meeting, to Ms. Oyweda Moorer, Director of the National Commission on VA Nursing, at the Department of Veterans Affairs (108N), 810 Vermont Avenue, NW., Washington, DC 20420. Any member of the public wishing to attend the meeting should contact Ms. Stephanie Williams, Program Analyst at (202) 273–4944.

Dated: December 18, 2002.

By Direction of the Secretary.

Nora E. Egan,

Committee Management Officer.

[FR Doc. 02–32627 Filed 12–26–02; 8:45 am]

BILLING CODE 8320–01–M

Federal Register

Friday,
December 27, 2002

Part II

Federal Deposit Insurance Corporation

12 CFR Part 303, et al.

Filing Procedures; Unsafe and Unsound Banking Practices; Registration of Transfer Agents; International Banking; Management Official Interlocks; and Golden Parachutes and Indemnification Payments; FDIC Statement of Policy on Bank Merger Transactions; Application for Deposit Insurance; Filing Procedures; Corporate Powers; Final Rule, Proposed Rule, and Notices

FEDERAL DEPOSIT INSURANCE CORPORATION

12 CFR Part 303

RIN 3064–AC51

Filing Procedures; Unsafe and Unsound Banking Practices; Registration of Transfer Agents; International Banking; Management Official Interlocks; and Golden Parachutes and Indemnification Payments

AGENCY: Federal Deposit Insurance Corporation (FDIC).

ACTION: Final rule.

SUMMARY: The FDIC is amending its regulations governing application, notice and request procedures to reflect changes from an internal reorganization order, which included the consolidation of the Division of Supervision and the Division of Compliance and Consumer Affairs into the Division of Supervision and Consumer Protection. The FDIC has also determined that the delegations of authority found in its filing procedures regulation should be removed to allow for greater flexibility in its delegation and decision making process.

EFFECTIVE DATE: December 27, 2002.

FOR FURTHER INFORMATION CONTACT: Division of Supervision and Consumer Protection: Steven D. Fritts, Associate Director, 202/898/3723, Mindy West, Examination Specialist, 202/898/7221. Legal Division: Supervision and Legislation Branch, Susan van den Toorn, Counsel, 202/898/8707, Robert C. Fick, Counsel, 202/898/8962, FDIC, Washington, DC 20429.

SUPPLEMENTARY INFORMATION:

I. Background

On July 2, 2002, the FDIC published in the **Federal Register** a final rule implementing the decision by the FDIC, through an internal reorganization order dated June 30, 2002 to merge certain divisions of the FDIC and, as a result, to change the names of the ''Division of Supervision'' ''DOS'' and the ''Division of Compliance and Consumer Affairs'' ''DCA'' to the ''Division of Supervision and Consumer Protection (DSC)'' and make changes to the names of other divisions of the FDIC. 67 FR 44351, July 2, 2002. The rule made the name changes to chapter III of title 12 of the Code of Federal Regulations. Specifically, the rule changed all references to the ''Division of Supervision'' and the ''Division of Compliance and Consumer Affairs'' to the ''Division of Supervision and Consumer Protection (DSC).'' The FDIC noted at that time that it intended to make further revisions to 12 CFR chapter III to reflect other changes as a result of the reorganization. This final rule constitutes those changes. In chapter III, part 303 of the FDIC's regulations (12 CFR part 303) (part 303) contains the procedures to be followed with respect to applications, notices, or requests (collectively ''filings'') required to be filed by statute or regulation. With the creation of the new Division of Supervision and Consumer Protection (DSC), the internal FDIC administrative scheme set forth in the previous part 303, approved by the Board in 1998 (63 FR 44686, August 20, 1998), must be amended to reflect the new organizational structure.

II. Discussion

Throughout part 303 there are numerous references to DOS and DCA and the Directors and Deputy Directors of those Divisions and an administrative scheme for the approval, denial or modification of applications, notices or requests based on the existence of two separate divisions. The FDIC's internal reorganization of those divisions thus necessitates a revision of the regulation to reflect the new structure. The new part 303 reflects that new organizational structure.

A primary purpose of the new structure was to streamline management and certain decision making processes. To support these efforts and provide greater flexibility in the future, the FDIC decided to remove the delegation authority found in part 303. The FDIC Board of Directors has affirmed and adopted the delegations of authority for DSC to act on certain supervisory applications and enforcement actions. In addition, the Board has also authorized these delegations of authority to be transferred from its regulation in part 303 and reissued in a Financial Institution Letter. The delegations of authority state which individuals within the FDIC are authorized to approve or deny specific applications and issue enforcement actions and what authority the Board has retained. While the FDIC has codified these delegations in its rules and regulations for many years, there is no statutory requirement that the agency's internal delegations authority be published in its regulation. In order to provide the maximum amount of flexibility and efficiency, the FDIC is moving its delegation of authority from the regulation to its Internet Web site (*http://www.fdic.gov*), where the delegations will be maintained. The public will be able to access the delegations of authority to determine which individuals are authorized to act on behalf of the FDIC. Instructions relating to the filing of applications will remain in part 303 of the FDIC's regulations.

III. Public Comment Waiver and Effective Date

As noted, this final rule reflects changes in part 303 as a result of the FDIC internal reorganization and does not affect any regulatory requirement imposed by the FDIC on the public. The changes are matters of ''agency organization, procedure, or practice'' and are thus not subject to the general requirement of the Administrative Procedure Act (APA) for notice and comment, pursuant to 5 U.S.C. 553(b)(3)(A). The changes are technical and non-substantive in nature and impact. Thus, the FDIC finds, for good cause, that the APA notice-and-comment provisions are unnecessary. 5 U.S.C. 553(b)(3)(B). This final rule is also effective immediately, because: (a) The changes are technical and procedural; (b) the public does not need a delayed period of time to conform or adjust; and (c) the current part 303 contains references to offices that have been merged with others and which should be corrected as promptly as possible. Therefore, it is determined that good cause exists for making these amendments effective on publication in the **Federal Register**, pursuant to 5 U.S.C. 553(d)(3).

IV. Paperwork Reduction Act

This final rule does not create or modify any collection of information pursuant to the Paperwork Reduction Act (44 U.S.C. 3501 *et seq.*). Consequently, no information has been submitted to the Office of Management and Budget for review.

V. Regulatory Flexibility Act

A regulatory flexibility analysis under the Regulatory Flexibility Act (RFA) is required only when an agency must publish a notice of proposed rulemaking. 5 U.S.C. 603 and 604. As already noted, the FDIC has determined that publication of a notice of proposed rulemaking is not necessary here. Accordingly, the RFA does not require a regulatory flexibility analysis.

VI. Assessment of Federal Regulations and Policies on Families

The FDIC has determined that this final rule will not affect family well being within the meaning of section 654 of the Treasury and General Government Appropriations Act, 1999, Pub. L. 105–277, 112 Stat. 2681 (1998).

List of Subjects in 12 CFR Part 303

Administrative practice and procedure, Bank deposit insurance, Banks, banking, Bank merger, Branching, Foreign branches, Foreign investments, Golden parachute payments, Reporting and record keeping requirements.

For the reasons set forth in the preamble and under the authority of 12 U.S.C. 1819(a)(Tenth), the FDIC Board of Directors hereby revises 12 CFR part 303 as follows:

PART 303—FILING PROCEDURES

Sec.
303.0 Scope.

Subpart A—Rules of General Applicability

303.1 Scope.
303.2 Definitions.
303.3 General filing procedures.
303.4 Computation of time.
303.5 Effect of Community Reinvestment Act performance on filings.
303.6 Investigations and examinations.
303.7 Public notice requirements.
303.8 Public access to filing.
303.9 Comments.
303.10 Hearings and other meetings.
303.11 Decisions.
303.12—303.13 [Reserved]
303.14 Being ''engaged in the business of receiving deposits other than trust funds.''
303.15—303.19 [Reserved]

Subpart B—Deposit Insurance

303.20 Scope.
303.21 Filing procedures.
303.22 Processing.
303.23 Public notice requirements.
303.24 Application for deposit insurance for an interim institution.
303.25 Continuation of deposit insurance upon withdrawing from membership in the Federal Reserve System.
303.26—303.39 [Reserved]

Subpart C—Establishment and Relocation of Domestic Branches and Offices

303.40 Scope.
303.41 Definitions.
303.42 Filing procedures.
303.43 Processing.
303.44 Public notice requirements.
303.45 Special provisions.
303.46—303.59 [Reserved]

Subpart D—Merger Transactions

303.60 Scope.
303.61 Definitions.
303.62 Transactions requiring prior approval.
303.63 Filing procedures.
303.64 Processing.
303.65 Public notice requirements.
303.66—303.79 [Reserved]

Subpart E—Change in Bank Control

303.80 Scope.
303.81 Definitions.
303.82 Transactions requiring prior notice.
303.83 Transactions not requiring prior notice.
303.84 Filing procedures.
303.85 Processing.
303.86 Public notice requirements.
303.87—303.99 [Reserved]

Subpart F— Change of Director or Senior Executive Officer

303.100 Scope.
303.101 Definitions.
303.102 Filing procedures and waiver of prior notice.
303.103 Processing.
303.104—303.119 [Reserved]

Subpart G—Activities of Insured State Banks

303.120 Scope.
303.121 Filing procedures.
303.122 Processing.
303.123–303.139 [Reserved]

Subpart H–Activities of Insured Savings Associations

303.140 Scope.
303.141 Filing procedures.
303.142 Processing.
303.143–303.159 [Reserved]

Subpart I—Mutual-to-Stock Conversions

303.160 Scope.
303.161 Filing procedures.
303.162 Waiver from compliance.
303.163 Processing.
303.164–303.179 [Reserved]

Subpart J—International Banking

303.180 Scope.
303.181 Definitions.
303.182 Establishing, moving or closing a foreign branch of a state nonmember bank; § 347.103.
303.183 Investmentby insured state nonmember banks in foreign organizations; § 347.108.
303.184 Moving an insured branch of a foreign bank.
303.185 Merger transactions involving foreign banks or foreign organizations.
303.186 Exemptions from insurance requirement for a state branch of a foreign bank; § 347.206.
303.187 Approval for an insured state branch of a foreign bank to conduct activities not permissible for federal branches; § 347.213
303.188–303.199 [Reserved]

Subpart K—Prompt Corrective Action

303.200 Scope.
303.201 Filing procedures.
303.202 Processing.
303.203 Applications for capital distribution.
303.204 Applicationsfor acquisitions, branching, and new lines of business.
303.205 Applications for bonuses and increased compensation for senior executive officers.
303.206 Application for payment of principal or interest on subordinated debt.
303.207 Restricted activities for critically undercapitalized institutions.
303.208–303.219 [Reserved]

Subpart L—Section 19 of the FDI Act (Consent to Service of Persons Convicted of Certain Criminal Offenses)

303.220 Scope.
303.221 Filing procedures.
303.222 Service at another insured depository institution.
303.223 Applicant's right to hearing following denial.
303.224–303.239 [Reserved]

Subpart M—Other Filings

303.240 General.
303.241 Reduce or retire capital stock or capital debt instruments.
303.242 Exercise of trust powers.
303.243 Brokered deposit waivers.
303.244 Golden parachute and severance plan payments.
303.245 Waiver of liability for commonly controlled depository institutions.
303.246 Insurance fund conversions.
303.247 Conversion with diminution of capital.
303.248 Continue or resume status as an insured institution following termination under section 8 of the FDI Act.
303.249 Truth in Lending Act—Relief from reimbursement.
303.250 Management official interlocks.
303.251 Modification of conditions.
303.252 Extension of time.
303.253–303.259 [Reserved]

Subpart N—[Reserved]

Authority: 12 U.S.C. 378, 1813, 1815, 1816, 1817, 1818, 1819, (Seventh and Tenth), 1820, 1823, 1828, 1831e, 1831p–l, 1835a, 3104, 3105, 3108; 3207; 15 U.S.C. 1601–1607.

§ 303.0 Scope.

(a) This part describes the procedures to be followed by both the FDIC and applicants with respect to applications, requests, or notices (filings) required to be filed by statute or regulation. Additional details concerning processing are explained in related FDIC statements of policy.

(b) Additional application procedures may be found in the following FDIC regulations:

(1) 12 CFR part 327—Assessments (Request for review of assessment risk classification);

(2) 12 CFR part 328—Advertisement of Membership (Application for temporary waiver of advertising requirements);

(3) 12 CFR part 345—Community Reinvestment (CRA strategic plans and requests for designation as a wholesale or limited purpose institution);

Subpart A—Rules of General Applicability

§ 303.1 Scope.

Subpart A prescribes the general procedures for submitting filings to the FDIC which are required by statute or regulation. This subpart also prescribes the procedures to be followed by the

FDIC, applicants and interested parties during the process of considering a filing, including public notice and comment. This subpart explains the availability of expedited processing for eligible depository institutions (defined in § 303.2(r)). Certain terms used throughout this part are also defined in this subpart.

§ 303.2 Definitions.

For purposes of this part:

(a) *Act* or *FDI Act* means the Federal Deposit Insurance Act (12 U.S.C. 1811 *et seq.*).

(b) *Adjusted part 325 total assets* means adjusted 12 CFR part 325 total assets as calculated and reflected in the FDIC's Report of Examination.

(c) *Adverse comment* means any objection, protest, or other adverse written statement submitted by an interested party relative to a filing. The term adverse comment shall not include any comment concerning the Community Reinvestment Act (CRA), fair lending, consumer protection, or civil rights that the appropriate regional director or designee determines to be frivolous (for example, raising issues between the commenter and the applicant that have been resolved). The term adverse comment also shall not include any other comment that the appropriate regional director or designee determines to be frivolous (for example, a non-substantive comment submitted primarily as a means of delaying action on the filing).

(d) *Amended order to pay* means an order to forfeit and pay civil money penalties, the amount of which has been changed from that assessed in the original notice of assessment of civil money penalties.

(e) *Applicant* means a person or entity that submits a filing to the FDIC.

(f) *Application* means a submission requesting FDIC approval to engage in various corporate activities and transactions.

(g) *Appropriate FDIC region* and *appropriate regional director* mean, respectively, the FDIC region and the FDIC regional director which the FDIC designates as follows:

(1) When an institution or proposed institution that is the subject of a filing or administrative action is not and will not be part of a group of related institutions, the appropriate FDIC region for the institution and any individual associated with the institution is the FDIC region in which the institution or proposed institution is or will be located, and the appropriate regional director is the regional director for that region; or

(2) When an institution or proposed institution that is the subject of a filing or administrative action is or will be part of a group of related institutions, the appropriate FDIC region for the institution and any individual associated with the institution is the FDIC region in which the group's major policy and decision makers are located, or any other region the FDIC designates on a case-by-case basis, and the appropriate regional director is the regional director for that region.

(h) *Associate director* means any associate director of the Division of Supervision and Consumer Protection (DSC) or, in the event such title become obsolete, any official of equivalent authority within the division.

(i) *Book capital* means total equity capital which is comprised of perpetual preferred stock, common stock, surplus, undivided profits and capital reserves, as those items are defined in the instructions of the Federal Financial Institutions Examination Council (FFIEC) for the preparation of Consolidated Reports of Condition and Income for insured banks.

(j) *Comment* means any written statement of fact or opinion submitted by an interested party relative to a filing.

(k) *Corporation* or *FDIC* means the Federal Deposit Insurance Corporation.

(l) *CRA protest* means any adverse comment from the public related to a pending filing which raises a negative issue relative to the Community Reinvestment Act (CRA) (12 U.S.C. 2901 *et seq.*), whether or not it is labeled a protest and whether or not a hearing is requested.

(m) *Deputy director* means the deputy director of the Division of Supervision and Consumer Protection (DSC) or, in the event such title become obsolete, any official of equivalent or higher authority within the division.

(n) *Deputy regional director* means any deputy regional director of the Division of Supervision and Consumer Protection (DSC) or, in the event such title become obsolete, any official of equivalent authority within the same FDIC region of DSC.

(o) *Appropriate FDIC office* means the office designated by the appropriate regional director or designee.

(p) *DSC* means the Division of Supervision and Consumer Protection or, in the event the Division of Supervision and Consumer Protection is reorganized, such successor division.

(q) *Director* means the Director of the Division of Supervision and Consumer Protection (DSC) or, in the event such title become obsolete, any official of equivalent or higher authority within the division.

(r) *Eligible depository institution* means a depository institution that meets the following criteria:

(1) Received an FDIC-assigned composite rating of 1 or 2 under the Uniform Financial Institutions Rating System (UFIRS) as a result of its most recent federal or state examination;

(2) Received a satisfactory or better Community Reinvestment Act (CRA) rating from its primary federal regulator at its most recent examination, if the depository institution is subject to examination under part 345 of this chapter;

(3) Received a compliance rating of 1 or 2 from its primary federal regulator at its most recent examination;

(4) Is well-capitalized as defined in the appropriate capital regulation and guidance of the institution's primary federal regulator; and

(5) Is not subject to a cease and desist order, consent order, prompt corrective action directive, written agreement, memorandum of understanding, or other administrative agreement with its primary federal regulator or chartering authority.

(s) *Filing* means an application, notice or request submitted to the FDIC under this part.

(t) *General Counsel* means the head of the Legal Division of the FDIC or any official within the Legal Division exercising equivalent authority for purposes of this part.

(u) *Insider* means a person who is or is proposed to be a director, officer, organizer, or incorporator of an applicant; a shareholder who directly or indirectly controls 10 percent or more of any class of the applicant's outstanding voting stock; or the associates or interests of any such person.

(v) *Institution-affiliated party* shall have the same meaning as provided in section 3(u) of the Act (12 U.S.C. 1813(u)).

(w) *NEPA* means the National Environmental Policy Act of 1969 (42 U.S.C. 4321 *et seq.*).

(x) *NHPA* means the National Historic Preservation Act of 1966 (16 U.S.C. 470 *et seq.*).

(y) *Notice* means a submission notifying the FDIC that a depository institution intends to engage in or has commenced certain corporate activities or transactions.

(z) *Notice to primary regulator* means the notice described in section 8(a)(2)(A) of the Act concerning termination of deposit insurance (12 U.S.C. 1818(a)(2)(A)).

(aa) *Regional counsel* means a regional counsel of the Legal Division or, in the event the title becomes

obsolete, any official of equivalent authority within the Legal Division.

(bb) *Regional director* means any regional director in the Division of Supervision and Consumer Protection (DSC), or in the event such title become obsolete, any official of equivalent authority within the division.

(cc) [Reserved]

(dd) *Standard conditions* means the conditions that the FDIC may impose as a routine matter when approving a filing, whether or not the applicant has agreed to their inclusion. The following conditions, or variations thereof, are standard conditions:

(1) That the applicant has obtained all necessary and final approvals from the appropriate federal or state authority or other appropriate authority;

(2) That if the transaction does not take effect within a specified time period, or unless, in the meantime, a request for an extension of time has been approved, the consent granted shall expire at the end of the specified time period;

(3) That until the conditional commitment of the FDIC becomes effective, the FDIC retains the right to alter, suspend or withdraw its commitment should any interim development be deemed to warrant such action; and

(4) In the case of a merger transaction (as defined in ¶ 303.61(a) of this part), including a corporate reorganization, that the proposed transaction not be consummated before the 30th calendar day (or shorter time period as may be prescribed by the FDIC with the concurrence of the Attorney General) after the date of the order approving the merger transaction.

(ee) *Tier 1 capital* shall have the same meaning as provided in ¶ 325.2(v) of this chapter (12 CFR 325.2(v)).

(ff) *Total assets* shall have the same meaning as provided in ¶ 325.2(x) of this chapter (12 CFR 325.2(x)).

§ 303.3 General filing procedures.

Unless stated otherwise, filings should be submitted to the appropriate FDIC office. Forms and instructions for submitting filings may be obtained from any FDIC regional director. If no form is prescribed, the filing should be in writing; be signed by the applicant or a duly authorized agent; and contain a concise statement of the action requested. For specific filing and content requirements, consult the appropriate subparts of this part. The FDIC may require the applicant to submit additional information.

§ 303.4 Computation of time.

For purposes of this part, the FDIC begins computing the relevant period on the day after an event occurs (*e.g.*, the day after a substantially complete filing is received by the FDIC or the day after publication begins) through the last day of the relevant period. When the last day is a Saturday, Sunday or federal holiday, the period runs until the end of the next business day.

§ 303.5 Effect of Community Reinvestment Act performance on filings.

Among other factors, the FDIC takes into account the record of performance under the Community Reinvestment Act (CRA) of each applicant in considering a filing for approval of:

(a) The establishment of a domestic branch;

(b) The relocation of the bank's main office or a domestic branch;

(c) The relocation of an insured branch of a foreign bank;

(d) A transaction subject to the Bank Merger Act; and

(e) Deposit insurance.

§ 303.6 Investigations and examinations.

The FDIC may examine or investigate and evaluate facts related to any filing under this chapter to the extent necessary to reach an informed decision and take any action necessary or appropriate under the circumstances.

§ 303.7 Public notice requirements.

(a) *General.* The public must be provided with prior notice of a filing to establish a domestic branch, relocate a domestic branch or the main office, relocate an insured branch of a foreign bank, engage in a merger transaction, initiate a change of control transaction, or request deposit insurance. The public has the right to comment on, or to protest, these types of proposed transactions during the relevant comment period. In order to fully apprise the public of this right, an applicant shall publish a public notice of its filing in a newspaper of general circulation. For specific publication requirements, consult subparts B (Deposit Insurance), C (Branches and Relocations), D (Merger Transactions), E (Change in Bank Control), and J (International Banking) of this part.

(b) *Confirmation of publication.* The applicant shall mail or otherwise deliver a copy of the newspaper notice to the appropriate FDIC office as part of its filing, or, if a copy is not available at the time of filing, promptly after publication.

(c) *Content of notice.* (1) The public notice referred to in paragraph (a) of this section shall consist of the following:

(i) *Name and address of the applicant(s).* In the case of an application for deposit insurance for a de novo bank, include the names of all organizers or incorporators. In the case of an application to establish a branch, include the location of the proposed branch or, in the case of an application to relocate a branch or main office, include the current and proposed address of the office. In the case of a merger application, include the names of all parties to the transaction. In the case of a notice of acquisition of control, include the name(s) of the acquiring parties. In the case of an application to relocate an insured branch of a foreign bank, include the current and proposed address of the branch.

(ii) Type of filing being made;

(iii) Name of the depository institution(s) that is the subject matter of the filing;

(iv) That the public may submit comments to the appropriate FDIC regional director;

(v) The address of the appropriate FDIC office where comments may be sent (the same location where the filing will be made);

(vi) The closing date of the public comment period as specified in the appropriate subpart; and

(vii) That the nonconfidential portions of the application are on file in the appropriate FDIC office and are available for public inspection during regular business hours; photocopies of the nonconfidential portion of the application file will be made available upon request.

(2) The requirements of paragraphs (c)(1)(iv) through (vii) of this section may be satisfied through use of the following notice:

> Any person wishing to comment on this application may file his or her comments in writing with the regional director of the Federal Deposit Insurance Corporation at the appropriate FDIC office [insert address of office] not later than [insert closing date of the public comment period specified in the appropriate subpart of part 303]. The non-confidential portions of the application are on file at the appropriate FDIC office and are available for public inspection during regular business hours. Photocopies of the nonconfidential portion of the application file will be made available upon request.

(d) *Multiple transactions.* The FDIC may consider more than one transaction, or a series of transactions, to be a single filing for purposes of the publication requirements of this section. When publishing a single public notice for multiple transactions, the applicant shall explain in the public notice how the transactions are related. The closing date of the comment period shall be the closing date of the longest public comment period that applies to any of the related transactions.

(e) *Joint public notices.* For a transaction subject to public notice requirements by the FDIC and another federal or state banking authority, the FDIC will accept publication of a single joint notice containing all the information required by both the FDIC and the other federal agency or state banking authority, provided that the notice states that comments must be submitted to the appropriate FDIC office and, if applicable, the other federal or state banking authority.

(f) Where public notice is required, the FDIC may determine on a case-by-case basis that unusual circumstances surrounding a particular filing warrant modification of the publication requirements.

§ 303.8 Public access to filing.

(a) *General.* For filings subject to a public notice requirement, any person may inspect or request a copy of the non-confidential portions of a filing (the public file) until 180 days following final disposition of a filing. Following the 180-day period, non-confidential portions of an application file will be made available in accordance with ' 303.8(c). The public file generally consists of portions of the filing, supporting data, supplementary information, and comments submitted by interested persons (if any) to the extent that the documents have not been afforded confidential treatment. To view or request photocopies of the public file, an oral or written request should be submitted to the appropriate FDIC office. The public file will be produced for review not more than one business day after receipt by the appropriate FDIC office of the request (either written or oral) to see the file. The FDIC may impose a fee for photocopying in accordance with § 309.5(f) of this chapter at the rates the FDIC publishes annually in the **Federal Register**.

(b) *Confidential treatment.* (1) The applicant may request that specific information be treated as confidential. The following information generally is considered confidential:

(i) Personal information, the release of which would constitute a clearly unwarranted invasion of privacy;

(ii) Commercial or financial information, the disclosure of which could result in substantial competitive harm to the submitter; and

(iii) Information, the disclosure of which could seriously affect the financial condition of any depository institution.

(2) If an applicant requests confidential treatment for information that the FDIC does not consider to be confidential, the FDIC may include that information in the public file after notifying the applicant. On its own initiative, the FDIC may determine that certain information should be treated as confidential and withhold that information from the public file.

(c) *FOIA requests.* A written request for information withheld from the public file, or copies of the public file following closure of the file 180 days after final disposition, should be submitted pursuant to the Freedom of Information Act (5 U.S.C. 552) and part 309 of this chapter to the FDIC, Attn: FOIA/Privacy Group, Legal Division, 550 17th Street, NW., Washington, DC 20429.

§ 303.9 Comments.

(a) *Submission of comments.* For filings subject to a public notice requirement, any person may submit comments to the appropriate FDIC regional director during the comment period.

(b) *Comment period*—(1) *General.* Consult appropriate subparts of this part for the comment period applicable to a particular filing.

(2) *Extension.* The FDIC may extend or reopen the comment period if:

(i) The applicant fails to file all required information on a timely basis to permit review by the public or makes a request for confidential treatment not granted by the FDIC that delays the public availability of that information;

(ii) Any person requesting an extension of time satisfactorily demonstrates to the FDIC that additional time is necessary to develop factual information that the FDIC determines may materially affect the application; or

(iii) The FDIC determines that other good cause exists.

(3) *Solicitation of comments.* Whenever appropriate, the appropriate regional director may solicit comments from any person or institution which might have an interest in or be affected by the pending filing.

(4) *Applicant response.* The FDIC will provide copies of all comments received to the applicant and may give the applicant an opportunity to respond.

§ 303.10 Hearings and other meetings.

(a) *Matters covered.* This section covers hearings and other proceedings in connection with filings and determinations for or by:

(1) Deposit insurance by a proposed new depository institution or operating non-insured institution;

(2) An insured state nonmember bank to establish a domestic branch or to relocate a main office or domestic branch;

(3) Relocation of an insured branch of a foreign bank;

(4)(i) Merger transaction which requires the FDIC's prior approval under the Bank Merger Act (12 U.S.C. 1828(c));

(ii) Except as otherwise expressly provided, the provisions of this § 303.10 shall not be applicable to any proposed merger transaction which the FDIC Board of Directors determines must be acted upon immediately to prevent the probable failure of one of the institutions involved, or must be handled with expeditious action due to an existing emergency condition, as permitted by the Bank Merger Act (12 U.S.C. 1828(c)(6));

(5) Nullification of a decision on a filing; and

(6) Any other purpose or matter which the FDIC Board of Directors in its sole discretion deems appropriate.

(b) *Hearing requests.* (1) Any person may submit a written request for a hearing on a filing:

(i) To the appropriate regional director before the end of the comment period; or

(ii) To the appropriate regional director, pursuant to a notice to nullify a decision on a filing issued pursuant to § 303.11(g)(2)(i) or (ii).

(2) The request must describe the nature of the issues or facts to be presented and the reasons why written submissions would be insufficient to make an adequate presentation of those issues or facts to the FDIC. A person requesting a hearing shall simultaneously submit a copy of the request to the applicant.

(c) *Action on a hearing request.* The appropriate regional director, after consultation with the Legal Division, may grant or deny a request for a hearing and may limit the issues that he or she deems relevant or material. The FDIC generally grants a hearing request only if it determines that written submissions would be insufficient or that a hearing otherwise would be in the public interest.

(d) *Denial of a hearing request.* If the appropriate regional director, after consultation with the Legal Division, denies a hearing request, he or she shall notify the person requesting the hearing of the reason for the denial. A decision to deny a hearing request shall be a final agency determination and is not appealable.

(e) *FDIC procedures prior to the hearing*—(1) *Notice of hearing.* The FDIC shall issue a notice of hearing if it grants a request for a hearing or orders a hearing because it is in the public interest. The notice of hearing shall state the subject and date of the filing, the time and place of the hearing, and the issues to be addressed. The FDIC shall send a copy of the notice of hearing to

the applicant, to the person requesting the hearing, and to anyone else requesting a copy.

(2) The presiding officer shall be the regional director or designee or such other person as may be named by the Board or the Director. The presiding officer is responsible for conducting the hearing and determining all procedural questions not governed by this section.

(f) *Participation in the hearing.* Any person who wishes to appear (participant) shall notify the appropriate regional director of his or her intent to participate in the hearing no later than 10 days from the date that the FDIC issues the Notice of Hearing. At least 5 days before the hearing, each participant shall submit to the appropriate regional director, as well as to the applicant and any other person as required by the FDIC, the names of witnesses, a statement describing the proposed testimony of each witness, and one copy of each exhibit the participant intends to present.

(g) *Transcripts.* The FDIC shall arrange for a hearing transcript. The person requesting the hearing and the applicant each shall bear the cost of one copy of the transcript for his or her use unless such cost is waived by the presiding officer and incurred by the FDIC.

(h) *Conduct of the hearing*—(1) *Presentations.* Subject to the rulings of the presiding officer, the applicant and participants may make opening and closing statements and present and examine witnesses, material, and data.

(2) *Information submitted.* Any person presenting material shall furnish one copy to the FDIC, one copy to the applicant, and one copy to each participant.

(3) *Laws not applicable to hearings.* The Administrative Procedure Act (5 U.S.C. 551 *et seq.*), the Federal Rules of Evidence (28 U.S.C. Appendix), the Federal Rules of Civil Procedure (28 U.S.C. Rule 1 *et seq.*), and the FDIC's Rules of Practice and Procedure (12 CFR part 308) do not govern hearings under this § 303.10.

(i) *Closing the hearing record.* At the applicant's or any participant's request, or at the FDIC's discretion, the FDIC may keep the hearing record open for up to 10 days following the FDIC's receipt of the transcript. The FDIC shall resume processing the filing after the record closes.

(j) *Disposition and notice thereof.* The presiding officer shall make a recommendation to the FDIC within 20 days following the date the hearing and record on the proceeding are closed. The FDIC shall notify the applicant and all participants of the final disposition of a filing and shall provide a statement of the reasons for the final disposition.

(k) *Computation of time.* In computing periods of time under this section, the provisions of § 308.12 of the FDIC's Rules of Practice and Procedure (12 CFR 308.12) shall apply.

(l) *Informal proceedings.* The FDIC may arrange for an informal proceeding with an applicant and other interested parties in connection with a filing, either upon receipt of a written request for such a meeting made during the comment period, or upon the FDIC's own initiative. No later than 10 days prior to an informal proceeding, the appropriate regional director shall notify the applicant and each person who requested a hearing or oral presentation of the date, time, and place of the proceeding. The proceeding may assume any form, including a meeting with FDIC representatives at which participants will be asked to present their views orally. The regional director may hold separate meetings with each of the participants.

(m) *Authority retained by FDIC Board of Directors to modify procedures.* The FDIC Board of Directors may delegate authority by resolution on a case-by-case basis to the presiding officer to adopt different procedures in individual matters and on such terms and conditions as the Board of Directors determines in its discretion. The resolution shall be made available for public inspection and copying in the Office of the General Counsel, Executive Secretary Section under the Freedom of Information Act (5 U.S.C. 552(a)(2)).

§ 303.11 Decisions.

(a) *General procedures.* The FDIC may approve, conditionally approve, deny, or not object to a filing after appropriate review and consideration of the record. The FDIC will promptly notify the applicant and any person who makes a written request of the final disposition of a filing. If the FDIC denies a filing, the FDIC will immediately notify the applicant in writing of the reasons for the denial.

(b) *Authority retained by FDIC Board of Directors to modify procedures.* In acting on any filing under this part, the FDIC Board of Directors may by resolution adopt procedures which differ from those contained in this part when it deems it necessary or in the public interest to do so. The resolution shall be made available for public inspection and copying in the Office of the General Counsel, Executive Secretary Section under the Freedom of Information Act (5 U.S.C. 552(a)(2)).

(c) *Expedited processing.* (1) A filing submitted by an eligible depository institution as defined in § 303.2(r) will receive expedited processing as specified in the appropriate subparts of this part unless the FDIC determines to remove the filing from expedited processing for any of the reasons set forth in paragraph (c)(2) of this section. Except for filings made pursuant to subpart J (International Banking), expedited processing will not be available for any filing that the appropriate regional director does not have delegated authority to approve.

(2) *Removal of filing from expedited processing.* The FDIC may remove a filing from expedited processing at any time prior to final disposition if:

(i) For filings subject to public notice under § 303.7, an adverse comment is received that warrants additional investigation or review;

(ii) For filings subject to evaluation of CRA performance under § 303.5, a CRA protest is received that warrants additional investigation or review, or the appropriate regional director determines that the filing presents a significant CRA or compliance concern;

(iii) For any filing, the appropriate regional director determines that the filing presents a significant supervisory concern, or raises a significant legal or policy issue; or

(iv) For any filing, the appropriate regional director determines that other good cause exists for removal.

(3) For purposes of this section, a significant CRA concern includes, but is not limited to, a determination by the appropriate regional director that, although a depository institution may have an institution-wide rating of satisfactory or better, a depository institution's CRA rating is less than satisfactory in a state or multi-state metropolitan statistical area, or a depository institution's CRA performance is less than satisfactory in a metropolitan statistical area as defined in 12 CFR 345.12 (MSA) or in the non-MSA portion of a state in which it seeks to expand through approval of an application for a deposit facility as defined in 12 U.S.C. 2902(3).

(4) If the FDIC determines that it is necessary to remove a filing from expedited processing pursuant to paragraph (c)(2) of this section, the FDIC promptly will provide the applicant with a written explanation

(d) *Multiple transactions.* If the FDIC is considering related transactions, some or all of which have been granted expedited processing, then the longest processing time for any of the related transactions shall govern for purposes of approval.

(e) *Abandonment of filing.* A filing must contain all information set forth in

the applicable subpart of this part. To the extent necessary to evaluate a filing, the FDIC may require an applicant to provide additional information. If information requested by the FDIC is not provided within the time period specified by the agency, the FDIC may deem the filing abandoned and shall provide written notification to the applicant and any interested parties that submitted comments to the FDIC that the file has been closed.

(f) *Appeals and requests for reconsideration*—(1) *General*. Appeal procedures for a denial of a change in bank control (subpart E), change in senior executive officer or board of directors (subpart F) or denial of an application pursuant to section 19 of the FDI Act (subpart L) are contained in 12 CFR part 308, subparts D, L, and M, respectively. For all other filings covered by this chapter for which appeal procedures are not provided by regulation or other written guidance, the procedures specified in paragraphs (f)(2) and (3) of this section shall apply. A decision to deny a request for a hearing is a final agency determination and is not appealable.

(2) *Filing procedures*. Within 15 days of receipt of notice from the FDIC that its filing has been denied, any applicant may file a request for reconsideration with the appropriate regional director.

(3) *Content of filing*. A request for reconsideration must contain the following information:

(i) A resolution of the board of directors of the applicant authorizing filing of the request if the applicant is a corporation, or a letter signed by the individual(s) filing the request if the applicant is not a corporation;

(ii) Relevant, substantive information that for good cause was not previously set forth in the filing; and

(iii) Specific reasons why the FDIC should reconsider its prior decision.

(4) [Reserved]

(5) [Reserved]

(6) *Processing*. The FDIC will notify the applicant whether reconsideration will be granted or denied within 15 days of receipt of a request for reconsideration. If a request for reconsideration is granted pursuant to § 303.11(f), the FDIC will notify the applicant of the final agency decision on such filing within 60 days of its receipt of the request for reconsideration.

(g) *Nullification, withdrawal, revocation, amendment, and suspension of decisions on filings*—(1) *Grounds for action*. Except as otherwise provided by law or regulation, the FDIC may nullify, withdraw, revoke, amend or suspend a decision on a filing if it becomes aware at anytime:

(i) Of any material misrepresentation or omission related to the filing or of any material change in circumstance that occurred prior to the consummation of the transaction or commencement of the activity authorized by the decision on the filing; or

(ii) That the decision on the filing is contrary to law or regulation or was granted due to clerical or administrative error.

(iii) Any person responsible for a material misrepresentation or omission in a filing or supporting materials may be subject to an enforcement action and other penalties, including criminal penalties provided in Title 18 of the United States Code.

(2) *Notice of intent and temporary order*. (i) Except as provided in § 303.11(g)(2)(ii), before taking action under this § 303.11(g), the FDIC shall issue and serve on an applicant written notice of its intent to take such action. A notice of intent to act on a filing shall include:

(A) The reasons for the proposed action; and

(B) The date by which the applicant may file a written response with the FDIC.

(ii) The FDIC may issue a temporary order on a decision on a filing without providing an applicant a prior notice of intent if the FDIC determines that:

(A) It is necessary to reevaluate the impact of a change in circumstance prior to the consummation of the transaction or commencement of the activity authorized by the decision on the filing; or

(B) The activity authorized by the filing may pose a threat to the interests of the depository institution's depositors or may threaten to impair public confidence in the depository institution.

(iii) A temporary order shall provide the applicant with an opportunity to make a written response in accordance with § 303.11(g)(3) of this section.

(3) *Response to notice of intent or temporary order*. An applicant may file a written response to a notice of intent or a temporary order within 15 days from the date of service of the notice or temporary order. The written response should include:

(i) An explanation of why the proposed action or temporary order is not warranted; and

(ii) Any other relevant information, mitigating circumstance, documentation, or other evidence in support of the applicant's position. An applicant may also request a hearing under § 303.10 of this part. Failure by an applicant to file a written response with the FDIC to a notice of intent or a temporary order within the specified time period, shall constitute a waiver of the opportunity to respond and shall constitute consent to a final order under this § 303.11(g).

(4) *Effective date*. All orders issued pursuant to this section shall become effective immediately upon issuance unless otherwise stated therein.

§§ 303. 12–303.13 [Reserved]

§ 303.14 Being ''engaged in the business of receiving deposits other than trust funds.''

(a) Except as provided in paragraphs (b), (c), and (d) of this section, a depository institution shall be ''engaged in the business of receiving deposits other than trust funds'' only if it maintains one or more non-trust deposit accounts in the minimum aggregate amount of $500,000.

(b) An applicant for federal deposit insurance under section 5 of the FDI Act, 12 U.S.C. 1815(a), shall be deemed to be ''engaged in the business of receiving deposits other than trust funds'' from the date that the FDIC approves deposit insurance for the institution until one year after it opens for business.

(c) Any depository institution that fails to satisfy the minimum deposit standard specified in paragraph (a) of this section as of two consecutive call report dates (*i.e.*, March 31st, June 30th, September 30th, and December 31st) shall be subject to a determination by the FDIC that the institution is not ''engaged in the business of receiving deposits other than trust funds'' and to termination of its insured status under section 8(p) of the FDI Act, 12 U.S.C. 1818(p). For purposes of this paragraph, the first three call report dates after the institution opens for business are excluded.

(d) Notwithstanding any failure by an insured depository institution to satisfy the minimum deposit standard in paragraph (a) of this section, the institution shall continue to be ''engaged in the business of receiving deposits other than trust funds'' for purposes of section 3 of the FDI Act until the institution's insured status is terminated by the FDIC pursuant to a proceeding under section 8(a) or section 8(p) of the FDI Act. 12 U.S.C. 1818(a) or 1818(p).

§§ 303.15–303.19 [Reserved]

Subpart B—Deposit Insurance

§ 303.20 Scope.

This subpart sets forth the procedures for applying for deposit insurance for a proposed depository institution or an operating noninsured depository

institution under section 5 of the FDI Act (12 U.S.C. 1815). It also sets forth the procedures for requesting continuation of deposit insurance for a state-chartered bank withdrawing from membership in the Federal Reserve System and for interim institutions chartered to facilitate a merger transaction.

§ 303.21 Filing procedures.

(a) Applications for deposit insurance shall be filed with the appropriate FDIC office. The relevant application forms and instructions for applying for deposit insurance for an existing or proposed depository institution may be obtained from any FDIC regional director.

(b) An application for deposit insurance for an interim depository institution shall be filed and processed in accordance with the procedures set forth in § 303.24, subject to the provisions of § 303.62(b)(2) regarding deposit insurance for interim institutions. An interim institution is defined as a state- or federally-chartered depository institution that does not operate independently but exists solely as a vehicle to accomplish a merger transaction.

(c) A request for continuation of deposit insurance upon withdrawing from membership in the Federal Reserve System shall be in letter form and shall provide the information prescribed in § 303.25.

§ 303.22 Processing.

(a) *Expedited processing for proposed institutions.* (1) An application for deposit insurance for a proposed institution which will be a subsidiary of an eligible depository institution as defined in § 303.2(r) or an eligible holding company will be acknowledged in writing by the FDIC and will receive expedited processing unless the applicant is notified in writing to the contrary and provided with the basis for that decision. An eligible holding company is defined as a bank or thrift holding company that has consolidated assets of $150 million or more, has an assigned composite rating of 2 or better, and has at least 75 percent of its consolidated depository institution assets comprised of eligible depository institutions. The FDIC may remove an application from expedited processing for any of the reasons set forth in § 303.11(c)(2).

(2) Under expedited processing, the FDIC will take action on an application within 60 days of receipt of a substantially complete application or 5 days after the expiration of the comment period described in § 303.23, whichever is later. Final action may be withheld until the FDIC has assurance that permission to organize the proposed institution will be granted by the chartering authority. Notwithstanding paragraph (a)(1) of this section, if the FDIC does not act within the expedited processing period, it does not constitute an automatic or default approval.

(b) *Standard processing.* For those applications that are not processed pursuant to the expedited procedures, the FDIC will provide the applicant with written notification of the final action when the decision is rendered.

§ 303.23 Public notice requirements.

(a) *De novo institutions and operating noninsured institutions.* The applicant shall publish a notice as prescribed in § 303.7 in a newspaper of general circulation in the community in which the main office of the depository institution is or will be located. Notice shall be published as close as practicable to, but no sooner than five days before, the date the application is mailed or delivered to the appropriate FDIC office. Comments by interested parties must be received by the appropriate regional director within 30 days following the date of publication, unless the comment period has been extended or reopened in accordance with § 303.9(b)(2).

(b) *Exceptions to public notice requirements.* No publication shall be required in connection with the granting of insurance to a new depository institution established pursuant to the resolution of a depository institution in default, or to an interim depository institution formed solely to facilitate a merger transaction, or for a request for continuation of federal deposit insurance by a state-chartered bank withdrawing from membership in the Federal Reserve System.

§ 303.24 Application for deposit insurance for an interim institution.

(a) *Application required.* Subject to § 303.62(b)(2), a deposit insurance application is required for a state-chartered interim institution if the related merger transaction is subject to approval by a federal banking agency other than the FDIC. A separate application for deposit insurance for an interim institution is not required in connection with any merger requiring FDIC approval pursuant to subpart D of this part.

(b) *Content of separate application.* A letter application for deposit insurance for an interim institution, accompanied by a copy of the related merger application, shall be filed with the appropriate FDIC office. The letter application shall briefly describe the transaction and contain a statement that deposit insurance is being requested for an interim institution that does not operate independently but exists solely as a vehicle to accomplish a merger transaction which will be reviewed by a federal banking agency other than the FDIC.

(c) *Processing.* An application for deposit insurance for an interim depository institution will be acknowledged in writing by the FDIC. Final action will be taken within 21 days after receipt of a substantially complete application, unless the applicant is notified in writing that additional review is warranted. If the FDIC does not act within the expedited processing period, it does not constitute an automatic or default approval.

§ 303.25 Continuation of deposit insurance upon withdrawing from membership in the Federal Reserve System.

(a) *Content of application.* To continue its insured status upon withdrawal from membership in the Federal Reserve System, a state-chartered bank shall submit a letter application to the appropriate FDIC office. A complete application shall consist of the following information:

(1) A copy of the letter, and any attachments thereto, sent to the appropriate Federal Reserve Bank setting forth the bank's intention to terminate its membership;

(2) A copy of the letter from the Federal Reserve Bank acknowledging the bank's notice to terminate membership;

(3) A statement regarding any anticipated changes in the bank's general business plan during the next 12-month period; and

(4)(i) A statement by the bank's management that there are no outstanding or proposed corrective programs or supervisory agreements with the Federal Reserve System.

(ii) If such programs or agreements exist, a statement by the applicant that its Board of Directors is willing to enter into similar programs or agreements with the FDIC which would become effective upon withdrawal from the Federal Reserve System.

(b) *Processing.* An application for deposit insurance under this section will be acknowledged in writing by the FDIC. The FDIC shall notify the applicant, within 15 days of receipt of a substantially complete application, either that federal deposit insurance will continue upon termination of membership in the Federal Reserve System or that additional review is warranted and the applicant will be notified, in writing, of the FDIC's final

decision regarding continuation of deposit insurance. If the FDIC does not act within the expedited processing period, it does not constitute an automatic or default approval.

§§ 303.26—303.39 [Reserved]

Subpart C—Establishment and Relocation of Domestic Branches and Offices

§ 303.40 Scope.

(a) *General.* This subpart sets forth the application requirements and procedures for insured state nonmember banks to establish a branch, relocate a branch or main office, and retain existing branches after the interstate relocation of the main office subject to the approval by the FDIC pursuant to sections 13(f), 13(k), 18(d) and 44 of the FDI Act.

(b) *Merger transaction.* Applications for approval of the acquisition and establishment of branches in connection with a merger transaction under section 18(c) of the FDI Act (12 U.S.C. 1828(c)), are processed in accordance with subpart D (Merger Transactions) of this part.

(c) *Insured branches of foreign banks and foreign branches of domestic banks.* Applications regarding insured branches of foreign banks and foreign branches of domestic banks are processed in accordance with subpart J (International Banking) of this part.

(d) *Interstate acquisition of individual branch.* Applications requesting approval of the interstate acquisition of an individual branch or branches located in a state other than the applicant's home state without the acquisition of the whole bank are treated as interstate bank merger transactions under section 44 of the FDI Act (12 U.S.C. 1831a(u)), and are processed in accordance with subpart D (Merger Transactions) of this part.

§ 303.41 Definitions.

For purposes of this subpart:

(a) *Branch* includes any branch bank, branch office, additional office, or any branch place of business located in any State of the United States or in any territory of the United States, Puerto Rico, Guam, American Samoa, the Trust Territory of the Pacific Islands, the Virgin Islands, and the Northern Mariana Islands at which deposits are received or checks paid or money lent. A branch does not include an automated teller machine, an automated loan machine, or a remote service unit. The term branch also includes the following:

(1) A *messenger service* that is operated by a bank or its affiliate that picks up and delivers items relating to transactions in which deposits are received or checks paid or money lent. A messenger service established and operated by a non-affiliated third party generally does not constitute a branch for purposes of this subpart. Banks contracting with third parties to provide messenger services should consult with the FDIC to determine if the messenger service constitutes a branch.

(2) A *mobile branch*, other than a messenger service, that does not have a single, permanent site and uses a vehicle that travels to various locations to enable the public to conduct banking business. A mobile branch may serve defined locations on a regular schedule or may serve a defined area at varying times and locations.

(3) A *temporary branch* that operates for a limited period of time not to exceed one year as a public service, such as during an emergency or disaster situation.

(4) A *seasonal branch* that operates at various periodically recurring intervals, such as during state and local fairs, college registration periods, and other similar occasions.

(b) *Branch relocation* means a move within the same immediate neighborhood of the existing branch that does not substantially affect the nature of the business of the branch or the customers of the branch. Moving a branch to a location outside its immediate neighborhood is considered the closing of an existing branch and the establishment of a new branch. Closing of a branch is covered in the FDIC Statement of Policy Concerning Branch Closing Notices and Policies. 1 FDIC Law, Regulations, Related Acts 5391; see § 309.4 (a) and (b) of this chapter for availability.

(c) *De novo branch* means a branch of a bank which is established by the bank as a branch and does not become a branch of such bank as a result of:

(1) The acquisition by the bank of an insured depository institution or a branch of an insured depository institution; or

(2) The conversion, merger, or consolidation of any such institution or branch.

(d) *Home state* means the state by which the bank is chartered.

(e) *Host state* means a state, other than the home state of the bank, in which the bank maintains, or seeks to establish and maintain, a branch.

§ 303.42 Filing procedures.

(a) *General.* An applicant shall submit an application to the appropriate FDIC office on the date the notice required by § 303.44 is published, or within 5 days after the date of the last required publication.

(b) *Content of filing.* A complete letter application shall include the following information:

(1) A statement of intent to establish a branch, or to relocate the main office or a branch;

(2) The exact location of the proposed site including the street address. With regard to messenger services, specify the geographic area in which the services will be available. With regard to a mobile branch specify the community or communities in which the vehicle will operate and the manner in which it will be used;

(3) Details concerning any involvement in the proposal by an insider of the bank as defined in § 303.2(u), including any financial arrangements relating to fees, the acquisition of property, leasing of property, and construction contracts;

(4) A statement on the impact of the proposal on the human environment, including, information on compliance with local zoning laws and regulations and the effect on traffic patterns for purposes of complying with the applicable provisions of the NEPA and the FDIC Statement of Policy on NEPA (1 FDIC Law, Regulations, Related Acts 5185; see § 309.4 (a) and (b) of this chapter for availability);

(5) A statement as to whether or not the site is eligible for inclusion in the National Register of Historic Places for purposes of complying with applicable provisions of the NHPA and the FDIC Statement of Policy on NHPA (1 FDIC Law, Regulations, Related Acts 5175; *see* §309.4 (a) and (b) of this chapter for availability) including documentation of consultation with the State Historic Preservation Officer, as appropriate;

(6) Comments on any changes in services to be offered, the community to be served, or any other effect the proposal may have on the applicant's compliance with the CRA;

(7) A copy of each newspaper publication required by § 303.44 of this subpart, the name and address of the newspaper, and date of the publication;

(8) When an application is submitted to relocate the main office of the applicant from one state to another, a statement of the applicant's intent regarding retention of branches in the state where the main office exists prior to relocation.

(c) *Undercapitalized institutions.* Applications to establish a branch by applicants subject to section 38 of the FDI Act (12 U.S.C. 1831*o*) also should provide the information required by § 303.204. Applications pursuant to sections 38 and 18(d) of the FDI Act (12

U.S.C. 1831*o* and 1828(d)) may be filed concurrently or as a single application.

(d) *Additional information.* The FDIC may request additional information to complete processing.

§ 303.43 Processing.

(a) *Expedited processing for eligible depository institutions.* An application filed under this subpart by an eligible depository institution as defined in § 303.2(r) will be acknowledged in writing by the FDIC and will receive expedited processing, unless the applicant is notified in writing to the contrary and provided with the basis for that decision. The FDIC may remove an application from expedited processing for any of the reasons set forth in § 303.11(c)(2). Absent such removal, an application processed under expedited processing will be deemed approved on the latest of the following:

(1) The 21st day after receipt by the FDIC of a substantially complete filing;

(2) The 5th day after expiration of the comment period described in§ 303.44; or

(3) In the case of an application to establish and operate a de novo branch in a state that is not the applicant's home state and in which the applicant does not maintain a branch, the 5th day after the FDIC receives confirmation from the host state that the applicant has both complied with the filing requirements of the host state and submitted a copy of the application with the FDIC to the host state bank supervisor.

(b) *Standard processing.* For those applications which are not processed pursuant to the expedited procedures, the FDIC will provide the applicant with written notification of the final action when the decision is rendered.

§ 303.44 Public notice requirements.

(a) *Newspaper publications.* For applications to establish or relocate a branch, a notice as described in § 303.7(c) shall be published once in a newspaper of general circulation. For applications to relocate a main office, notice shall be published at least once each week on the same day for two consecutive weeks. The required publication shall be made in the following communities:

(1) *To establish a branch.* In the community in which the main office is located and in the communities to be served by the branch (including messenger services and mobile branches).

(2) *To relocate a main office.* In the community in which the main office is currently located and in the community to which it is proposed the main office will relocate.

(3) *To relocate a branch.* In the community in which the branch is located.

(b) *Public comments.* Comments by interested parties must be received by the appropriate regional director within 15 days after the date of the last newspaper publication required by paragraph (a) of this section, unless the comment period has been extended or reopened in accordance with § 303.9(b)(2).

(c) *Lobby notices.* In the case of applications to relocate a main office or a branch, a copy of the required newspaper publication shall be posted in the public lobby of the office to be relocated for at least 15 days beginning on the date of the last published notice required by paragraph (a) of this section.

§ 303.45 Special provisions.

(a) *Emergency or disaster events.* (1) In the case of an emergency or disaster at a main office or a branch which requires that an office be immediately relocated to a temporary location, applicants shall notify the appropriate FDIC office within 3 days of such temporary relocation.

(2) Within 10 days of the temporary relocation resulting from an emergency or disaster, the bank shall submit a written application to the appropriate FDIC office, that identifies the nature of the emergency or disaster, specifies the location of the temporary branch, and provides an estimate of the duration the bank plans to operate the temporary branch.

(3) As part of the review process, the FDIC will determine on a case by case basis whether additional information is necessary and may waive public notice requirements.

(b) *Redesignation of main office and existing branch.* In cases where an applicant desires to redesignate its main office as a branch and redesignate an existing branch as the main office, a single application shall be submitted. The FDIC may waive the public notice requirements in instances where an application presents no significant or novel policy, supervisory, CRA, compliance or legal concerns. A waiver will be granted only to a redesignation within the applicant's home state.

(c) *Expiration of approval.* Approval of an application expires if within 18 months after the approval date a branch has not commenced business or a relocation has not been completed.

§§ 303.46–303.59 [Reserved]

Subpart D—Merger Transactions

§ 303.60 Scope.

This subpart sets forth the application requirements and procedures for transactions subject to FDIC approval under the Bank Merger Act, section 18(c) of the FDI Act (12 U.S.C. 1828(c)). Additional guidance is contained in the FDIC ''Statement of Policy on Bank Merger Transactions'' (1 FDIC Law, Regulations, Related Acts 5145; see § 309.4(a) and (b) of this chapter for availability).

§ 303.61 Definitions.

For purposes of this subpart:

(a) *Merger transaction* includes any transaction:

(1) In which an insured depository institution merges or consolidates with any other insured depository institution or, either directly or indirectly, acquires the assets of, or assumes liability to pay any deposits made in, any other insured depository institution; or

(2) In which an insured depository institution merges or consolidates with any noninsured bank or institution or assumes liability to pay any deposits made in, or similar liabilities of, any noninsured bank or institution, or in which an insured depository institution transfers assets to any noninsured bank or institution in consideration of the assumption of any portion of the deposits made in the insured depository institution.

(b) *Corporate reorganization* means a merger transaction between commonly-owned institutions, between an insured depository institution and its subsidiary, or between an insured depository institution and its holding company, provided that the merger transaction would have no effect on competition or otherwise have significance under the statutory standards set forth in section 18(c) of the FDI Act (12 U.S.C. 1828(c)). For purposes of this paragraph, institutions are commonly-owned if more than 50 percent of the voting stock of each of the institutions is owned by the same company, individual, or group of closely-related individuals acting in concert.

(c) *Interim merger transaction* means a merger transaction (other than a purchase and assumption transaction) between an operating depository institution and a newly-formed depository institution or corporation that will not operate independently and that exists solely for the purpose of facilitating a corporate reorganization.

(d) *Optional conversion* (Oakar transaction) means a merger transaction

in which an insured depository institution assumes deposit liabilities insured by the deposit insurance fund (either the Bank Insurance Fund (BIF) or the Savings Association Insurance Fund (SAIF)) of which that assuming institution is not a member, and elects not to convert the insurance covering the assumed deposits. Such transactions are covered by section 5(d)(3) of the FDI Act (12 U.S.C. 1815(d)(3)).

(e) *Resulting institution* refers to the acquiring, assuming or resulting institution in a merger transaction.

§ 303.62 Transactions requiring prior approval.

(a) *Merger transactions.* The following merger transactions require the prior written approval of the FDIC under this subpart:

(1) Any merger transaction, including any corporate reorganization, interim merger transaction, or optional conversion, in which the resulting institution is to be an insured state nonmember bank; and

(2) Any merger transaction, including any corporate reorganization or interim merger transaction, that involves an uninsured bank or institution.

(b) *Related provisions.* Transactions covered by this subpart also may be subject to other provisions or application requirements, including the following:

(1) *Interstate merger transactions.* Merger transactions between insured banks that are chartered in different states are subject to the provisions of section 44 of the FDI Act (12 U.S.C. 1831u). In the case of a merger transaction that consists of the acquisition by an out of state bank of a branch without acquisition of the bank, the branch is treated for section 44 purposes as a bank whose home state is the state in which the branch is located.

(2) *Deposit insurance.* An application for deposit insurance will be required in connection with a merger transaction between a state-chartered interim institution and an insured depository institution if the related merger application is being acted upon by a federal banking agency other than the FDIC. If the FDIC is the federal banking agency responsible for acting on the related merger application, a separate application for deposit insurance is not necessary. Procedures for applying for deposit insurance are set forth in subpart B of this part. An application for deposit insurance will not be required in connection with a merger transaction (other than a purchase and assumption transaction) of a federally-chartered interim institution and an insured institution, even if the resulting institution is to operate under the charter of the federal interim institution.

(3) *Deposit insurance fund conversions.* Procedures for conversion transactions involving the transfer of deposits from BIF to SAIF or from SAIF to BIF are set forth in subpart M of this part at § 303.246.

(4) *Branch closings.* Branch closings in connection with a merger transaction are subject to the notice requirements of section 42 of the FDI Act (12 U.S.C. 1831r–1), including requirements for notice to customers. These requirements are addressed in the ''Interagency Policy Statement Concerning Branch Closings Notices and Policies'' (1 FDIC Law, Regulations, Related Acts (FDIC) 5391; see § 309.4(a) and (b) of this chapter for availability.)

(5) *Undercapitalized institutions.* Applications for a merger transaction by applicants subject to section 38 of the FDI Act (12 U.S.C. 1831*o*) should also provide the information required by § 303.204. Applications pursuant to sections 38 and 18(c) of the FDI Act (12 U.S.C, 1831*o* and 1828(c)) may be filed concurrently or as a single application.

(6) *Certification of assumption of deposit liability.* An insured depository institution assuming deposit liabilities of another insured institution must provide certification of assumption of deposit liability to the FDIC in accordance with 12 CFR part 307.

§ 303.63 Filing procedures.

(a) *General.* Applications required under this subpart shall be filed with the appropriate FDIC office. The appropriate forms and instructions may be obtained upon request from any FDIC regional director.

(b) *Merger transactions.* Applications for approval of merger transactions shall be accompanied by copies of all agreements or proposed agreements relating to the merger transaction and any other information requested by the FDIC.

(c) *Interim merger transactions.* Applications for approval of interim merger transactions and any related deposit insurance applications shall be made by filing the forms and other documents required by paragraphs (a) and (b) of this section and such other information as may be required by the FDIC for consideration of the request for deposit insurance.

(d) *Optional conversions.* If the proposed merger transaction is an optional conversion, the merger application shall include a statement that the proposed merger transaction is a transaction covered by section 5(d)(3) of the FDI Act (12 U.S.C. 1815(d)(3)).

§ 303.64 Processing.

(a) *Expedited processing for eligible depository institutions*—(1) *General.* An application filed under this subpart by an eligible depository institution as defined in § 303.2(r) and which meets the additional criteria in paragraph (a)(4) of this section will be acknowledged by the FDIC in writing and will receive expedited processing, unless the applicant is notified in writing to the contrary and provided with the basis for that decision. The FDIC may remove an application from expedited processing for any of the reasons set forth in § 303.11(c)(2).

(2) Under expedited processing, the FDIC will take action on an application by the date that is the latest of:

(i) 45 days after the date of the FDIC's receipt of a substantially complete merger application; or

(ii) 10 days after the date of the last notice publication required under § 303.65 of this subpart; or

(iii) 5 days after receipt of the Attorney General's report on the competitive factors involved in the proposed transaction; or

(iv) For an interstate merger transaction subject to the provisions of section 44 of the FDI Act (12 U.S.C. 1831u), 5 days after the FDIC receives confirmation from the host state (as defined in § 303.41(e)) that the applicant has both complied with the filing requirements of the host state and submitted a copy of the FDIC merger application to the host state's bank supervisor.

(3) Notwithstanding paragraph (a)(1) of this section, if the FDIC does not act within the expedited processing period, it does not constitute an automatic or default approval.

(4) *Criteria.* The FDIC will process an application using expedited procedures if:

(i) Immediately following the merger transaction, the resulting institution will be ''well-capitalized'' pursuant to subpart B of part 325 of this chapter (12 CFR part 325); and

(ii)(A) All parties to the merger transaction are eligible depository institutions as defined in § 303.2(r); or

(B) The acquiring party is an eligible depository institution as defined in § 303.2(r) and the amount of the total assets to be transferred does not exceed an amount equal to 10 percent of the acquiring institution's total assets as reported in its report of condition for the quarter immediately preceding the filing of the merger application.

(b) *Standard processing.* For those applications not processed pursuant to the expedited procedures, the FDIC will provide the applicant with written

notification of the final action taken by the FDIC on the application when the decision is rendered.

§ 303.65 Public notice requirements.

(a) *General.* Except as provided in paragraph (b) of this section, an applicant for approval of a merger transaction must publish notice of the proposed transaction on at least three occasions at approximately equal intervals in a newspaper of general circulation in the community or communities where the main offices of the merging institutions are located or, if there is no such newspaper in the community, then in the newspaper of general circulation published nearest thereto.

(1) *First publication.* The first publication of the notice should be as close as practicable to the date on which the application is filed with the FDIC, but no more than 5 days prior to the filing date.

(2) *Last publication.* The last publication of the notice shall be on the 25th day after the first publication or, if the newspaper does not publish on the 25th day, on the newspaper's publication date that is closest to the 25th day.

(b) *Exceptions*—(1) *Emergency requiring expeditious action.* If the FDIC determines that an emergency exists requiring expeditious action, notice shall be published twice. The first notice shall be published as soon as possible after the FDIC notifies the applicant of such determination. The second notice shall be published on the 7th day after the first publication or, if the newspaper does not publish on the 7th day, on the newspaper's publication date that is closest to the 7th day.

(2) *Probable failure.* If the FDIC determines that it must act immediately to prevent the probable failure of one of the institutions involved in a proposed merger transaction, publication is not required.

(c) *Content of notice*—(1) *General.* The notice shall conform to the public notice requirements set forth in § 303.7.

(2) *Branches.* If it is contemplated that the resulting institution will operate offices of the other institution(s) as branches, the following statement shall be included in the notice required in § 303.7(b):

It is contemplated that all offices of the above-named institutions will continue to be operated (with the exception of [insert identity and location of each office that will not be operated]).

(3) *Emergency requiring expeditious action.* If the FDIC determines that an emergency exists requiring expeditious action, the notice shall specify as the closing date of the public comment period the date that is the 10th day after the date of the first publication.

(d) *Public comments.* Comments must be received by the appropriate FDIC office within 30 days after the first publication of the notice, unless the comment period has been extended or reopened in accordance with § 303.9(b)(2). If the FDIC has determined that an emergency exists requiring expeditious action, comments must be received by the appropriate FDIC office within 10 days after the first publication.

§§ 303.66—303.79 [Reserved]

Subpart E—Change in Bank Control

§ 303.80 Scope.

This subpart sets forth the procedures for submitting a notice to acquire control of an insured state nonmember bank pursuant to the Change in Bank Control Act of 1978, section 7(j) of the FDI Act (12 U.S.C. 1817(j)).

§ 303.81 Definitions.

For purposes of this subpart:

(a) *Acquisition* means a purchase, assignment, transfer, pledge or other disposition of voting shares, or an increase in percentage ownership of an insured state nonmember bank resulting from a redemption of voting shares.

(b) *Acting in concert* means knowing participation in a joint activity or parallel action towards a common goal of acquiring control of an insured state nonmember bank, whether or not pursuant to an express agreement.

(c) *Control* means the power, directly or indirectly, to direct the management or policies of an insured bank or to vote 25 percent or more of any class of voting shares of an insured bank.

(d) *Person* means an individual, corporation, partnership, trust, association, joint venture, pool, syndicate, sole proprietorship, unincorporated organization, and any other form of entity; and a voting trust, voting agreement, and any group of persons acting in concert.

§ 303.82 Transactions requiring prior notice.

(a) *Prior notice requirement.* Any person acting directly or indirectly, or through or in concert with one or more persons, shall give the FDIC 60 days prior written notice, as specified in § 303.84, before acquiring control of an insured state nonmember bank, unless the acquisition is exempt under § 303.83.

(b) *Acquisitions requiring prior notice*—(1) *Acquisition of control.* The acquisition of control, unless exempted, requires prior notice to the FDIC.

(2) *Rebuttable presumption of control.* The FDIC presumes that an acquisition of voting shares of an insured state nonmember bank constitutes the acquisition of the power to direct the management or policies of an insured bank requiring prior notice to the FDIC, if, immediately after the transaction, the acquiring person (or persons acting in concert) will own, control, or hold with power to vote 10 percent or more of any class of voting shares of the institution, and if:

(i) The institution has registered shares under section 12 of the Securities Exchange Act of 1934 (15 U.S.C. 78l); or

(ii) No other person will own, control or hold the power to vote a greater percentage of that class of voting shares immediately after the transaction. If two or more persons, not acting in concert, each propose to acquire simultaneously equal percentages of 10 percent or more of a class of voting shares of an insured state nonmember bank, each such person shall file prior notice with the FDIC.

(c) *Acquisitions of loans in default.* The FDIC presumes an acquisition of a loan in default that is secured by voting shares of an insured state nonmember bank to be an acquisition of the underlying shares for purposes of this section.

(d) *Other transactions.* Transactions other than those set forth in paragraph (b)(2) of this section resulting in a person's control of less than 25 percent of a class of voting shares of an insured state nonmember bank are not deemed by the FDIC to constitute control for purposes of the Change in Bank Control Act (12 U.S.C. 1817j).

(e) *Rebuttal of presumptions.* Prior notice to the FDIC is not required for any acquisition of voting shares under the presumption of control set forth in this section, if the FDIC finds that the acquisition will not result in control. The FDIC will afford any person seeking to rebut a presumption in this section an opportunity to present views in writing or, if appropriate, orally before its designated representatives at an informal meeting.

§ 303.83 Transactions not requiring prior notice.

(a) *Exempt transactions.* The following transactions do not require notice to the FDIC under this subpart:

(1) The acquisition of additional voting shares of an insured state nonmember bank by a person who:

(i) Held the power to vote 25 percent or more of any class of voting shares of that institution continuously since

March 9, 1979, or since that institution commenced business, whichever is later; or

(ii) Is presumed, under § 303.82(b)(2), to have controlled the institution continuously since March 9, 1979, if the aggregate amount of voting shares held does not exceed 25 percent or more of any class of voting shares of the institution or, in other cases, where the FDIC determines that the person has controlled the bank continuously since March 9, 1979;

(2) The acquisition of additional shares of a class of voting shares of an insured state nonmember bank by any person (or persons acting in concert) who has lawfully acquired and maintained control of the institution (for purposes of § 303.82) after complying with the procedures of the Change in Bank Control Act to acquire voting shares of the institution under this subpart;

(3) Acquisitions of voting shares subject to approval under section 3 of the Bank Holding Company Act (12 U.S.C. 1842(a)), section 18(c) of the FDI Act (12 U.S.C. 1828(c)), or section 10 of the Home Owners' Loan Act (12 U.S.C. 1467a);

(4) Transactions exempt under the Bank Holding Company Act: foreclosures by institutional lenders, fiduciary acquisitions by banks, and increases of majority holdings by bank holding companies described in sections 2(a)(5), 3(a)(A), or 3(a)(B) respectively of the Bank Holding Company Act (12 U.S.C. 1841(a)(5), 1842(a)(A), and 1842(a)(B));

(5) A customary one-time proxy solicitation;

(6) The receipt of voting shares of an insured state nonmember bank through a pro rata stock dividend; and

(7) The acquisition of voting shares in a foreign bank, which has an insured branch or branches in the United States. (This exemption does not extend to the reports and information required under paragraphs 9, 10, and 12 of the Change in Bank Control Act of 1978 (12 U.S.C. 1817(j) (9), (10), and (12)).

(b) *Prior notice exemption.* (1) The following acquisitions of voting shares of an insured state nonmember bank, which otherwise would require prior notice under this subpart, are not subject to the prior notice requirements if the acquiring person notifies the appropriate FDIC office within 90 calendar days after the acquisition and provides any relevant information requested by the FDIC.

(i) The acquisition of voting shares through inheritance;

(ii) The acquisition of voting shares as a bona fide gift; or

(iii) The acquisition of voting shares in satisfaction of a debt previously contracted in good faith, except that the acquiror of a defaulted loan secured by a controlling amount of a state nonmember bank's voting securities shall file a notice before the loan is acquired.

(2) The following acquisitions of voting shares of an insured state nonmember bank, which otherwise would require prior notice under this subpart, are not subject to the prior notice requirements if the acquiring person notifies the appropriate FDIC office within 90 calendar days after receiving notice of the acquisition and provides any relevant information requested by the FDIC.

(i) A percentage increase in ownership of voting shares resulting from a redemption of voting shares by the issuing bank; or

(ii) The sale of shares by any shareholder that is not within the control of a person resulting in that person becoming the largest shareholder.

(3) Nothing in paragraph (b)(1) of this section limits the authority of the FDIC to disapprove a notice pursuant to § 303.85(c).

§ 303.84 Filing procedures.

(a) *Filing notice.* (1) A notice required under this subpart shall be filed with the appropriate FDIC office and shall contain all the information required by paragraph 6 of the Change in Bank Control Act, section 7 (j) of the FDI Act, (12 U.S.C. 1817(j)(6)), or prescribed in the designated interagency form which may be obtained from any FDIC regional director.

(2) The FDIC may waive any of the informational requirements of the notice if the FDIC determines that it is in the public interest.

(3) A notificant shall notify the appropriate FDIC office immediately of any material changes in a notice submitted to the FDIC, including changes in financial or other conditions.

(4) When the acquiring person is an individual, or group of individuals acting in concert, the requirement to provide personal financial data may be satisfied by a current statement of assets and liabilities and an income summary, as required in the designated interagency form, together with a statement of any material changes since the date of the statement or summary. The FDIC may require additional information if appropriate.

(b) *Other laws.* Nothing in this subpart shall affect any obligation which the acquiring person(s) may have to comply with the federal securities laws or other laws.

§ 303.85 Processing.

(a) *Acceptance of notice.* The 60-day notice period specified in § 303.82 shall commence on the date of receipt of a substantially complete notice. The FDIC shall notify the person or persons submitting a notice under this subpart in writing of the date the notice is accepted for processing. The FDIC may request additional information at any time.

(b) *Time period for FDIC action; consummation of acquisition.* (1) The notificant(s) may consummate the proposed acquisition 60 days after submission to the appropriate FDIC office of a substantially complete notice under paragraph (a) of this section, unless within that period the FDIC disapproves the proposed acquisition or extends the 60-day period.

(2) The notificant(s) may consummate the proposed transaction before the expiration of the 60-day period if the FDIC notifies the notificant(s) in writing of its intention not to disapprove the acquisition.

(c) *Disapproval of acquisition of control.* Subpart D of 12 CFR part 308 sets forth the rules of practice and procedure for a notice of disapproval.

§ 303.86 Public notice requirements.

(a) *Publication*—(1) *Newspaper announcement.* Any person(s) filing a notice under this subpart shall publish an announcement soliciting public comment on the proposed acquisition. The announcement shall be published in a newspaper of general circulation in the community in which the home office of the state nonmember bank to be acquired is located. The announcement shall be published as close as is practicable to the date the notice is filed with the appropriate FDIC office, but in no event more than 10 calendar days before or after the filing date.

(2) *Contents of newspaper announcement.* The newspaper announcement shall conform to the public notice requirements set forth in § 303.7.

(b) *Delay of publication.* The FDIC may permit delay in the publication required by this section if the FDIC determines, for good cause, that it is in the public interest to grant such a delay. Requests for delay of publication may be submitted to the appropriate FDIC office.

(c) *Shortening or waiving notice.* The FDIC may shorten the public comment period to a period of not less than 10 days, or waive the public comment or newspaper publication requirements of

this paragraph, or act on a notice before the expiration of a public comment period, if it determines in writing either that an emergency exists or that disclosure of the notice, solicitation of public comment, or delay until expiration of the public comment period would seriously threaten the safety or soundness of the bank to be acquired.

(d) *Consideration of public comments.* In acting upon a notice filed under this subpart, the FDIC shall consider all public comments received in writing within 20 days following the required newspaper publication or, if the FDIC has shortened the public comment period pursuant to paragraph (c) of this section, within such shorter period.

(e) *Publication if filing is subsequent to acquisition of control.* (1) Whenever a notice of a proposed acquisition of control is not filed in accordance with the Change in Bank Control Act and these regulations, the acquiring person(s) shall, within 10 days of being so directed by the FDIC, publish an announcement of the acquisition of control in a newspaper of general circulation in the community in which the home office of the state nonmember bank to be acquired is located.

(2) The newspaper announcement shall contain the name(s) of the acquiror(s), the name of the depository institution involved, and the date of the acquisition of the stock. The announcement shall also contain a statement indicating that the FDIC is currently reviewing the acquisition of control. The announcement also shall state that any person wishing to comment on the change in control may do so by submitting written comments to the appropriate regional director of the FDIC (give address of appropriate FDIC office) within 20 days following the required newspaper publication.

§§ 303.87–303.99 [Reserved]

Subpart F—Change of Director or Senior Executive Officer

§ 303.100 Scope.

This subpart sets forth the circumstances under which an insured state nonmember bank must notify the FDIC of a change in any member of its board of directors or any senior executive officer and the procedures for filing such notice. This subpart implements section 32 of the FDI Act (12 U.S.C. 1831i).

§ 303.101 Definitions.

For purposes of this subpart:

(a) *Director* means a person who serves on the board of directors or board of trustees of an insured state nonmember bank, except that this term does not include an advisory director who:

(1) Is not elected by the shareholders;

(2) Is not authorized to vote on any matters before the board of directors or board of trustees or any committee thereof;

(3) Solely provides general policy advice to the board of directors or board of trustees and any committee thereof; and

(4) Has not been identified by the FDIC as a person who performs the functions of a director for purposes of this subpart.

(b) *Senior executive officer* means a person who holds the title of president, chief executive officer, chief operating officer, chief managing official (in an insured state branch of a foreign bank), chief financial officer, chief lending officer, or chief investment officer, or, without regard to title, salary, or compensation, performs the function of one or more of these positions. *Senior executive officer* also includes any other person identified by the FDIC, whether or not hired as an employee, with significant influence over, or who participates in, major policymaking decisions of the insured state nonmember bank.

(c) *Troubled condition* means any insured state nonmember bank that:

(1) Has a composite rating, as determined in its most recent report of examination, of 4 or 5 under the Uniform Financial Institutions Rating System (UFIRS), or in the case of an insured state branch of a foreign bank, an equivalent rating; or

(2) Is subject to a proceeding initiated by the FDIC for termination or suspension of deposit insurance; or

(3) Is subject to a cease-and-desist order or written agreement issued by either the FDIC or the appropriate state banking authority that requires action to improve the financial condition of the bank or is subject to a proceeding initiated by the FDIC or state authority which contemplates the issuance of an order that requires action to improve the financial condition of the bank, unless otherwise informed in writing by the FDIC; or

(4) Is informed in writing by the FDIC that it is in troubled condition for purposes of the requirements of this subpart on the basis of the bank's most recent report of condition or report of examination, or other information available to the FDIC.

§ 303.102 Filing procedures and waiver of prior notice.

(a) *Insured state nonmember banks.* An insured state nonmember bank shall give the FDIC written notice, as specified in paragraph (c)(1) of this section, at least 30 days prior to adding or replacing any member of its board of directors, employing any person as a senior executive officer of the bank, or changing the responsibilities of any senior executive officer so that the person would assume a different senior executive officer position, if:

(1) The bank is not in compliance with all minimum capital requirements applicable to the bank as determined on the basis of the bank's most recent report of condition or report of examination;

(2) The bank is in troubled condition; or

(3) The FDIC determines, in connection with its review of a capital restoration plan required under section 38(e)(2) of the FDI Act (12 U.S.C. 1831*o*(e)(2)) or otherwise, that such notice is appropriate.

(b) *Insured branches of foreign banks.* In the case of the addition of a member of the board of directors or a change in senior executive officer in a foreign bank having an insured state branch, the notice requirement shall not apply to such additions and changes in the foreign bank parent, but only to changes in senior executive officers in the state branch.

(c) *Waiver of prior notice*—(1) *Waiver requests.* The FDIC may permit an individual, upon petition by the bank to the appropriate FDIC office, to serve as a senior executive officer or director before filing the notice required under this subpart if the FDIC finds that:

(i) Delay would threaten the safety or soundness of the bank;

(ii) Delay would not be in the public interest; or

(iii) Other extraordinary circumstances exist that justify waiver of prior notice.

(2) *Automatic waiver.* In the case of the election of a new director not proposed by management at a meeting of the shareholders of an insured state nonmember bank, the prior 30-day notice is automatically waived and the individual immediately may begin serving, provided that a complete notice is filed with the appropriate FDIC office within two business days after the individual's election.

(3) *Effect on disapproval authority.* A waiver shall not affect the authority of the FDIC to disapprove a notice within 30 days after a waiver is granted under paragraph (c)(1) of this section or the election of an individual who has filed a notice and is serving pursuant to an automatic waiver under paragraph (c)(2) of this section.

(d)(1) *Content of filing.* The notice required by paragraph (a) of this section

shall be filed with the appropriate FDIC office and shall contain information pertaining to the competence, experience, character, or integrity of the individual with respect to whom the notice is submitted, as prescribed in the designated interagency form which is available from any FDIC regional director. The FDIC may require additional information.

(2) *Modification.* The FDIC may modify or accept other information in place of the requirements of paragraph (d)(1) of this section for a notice filed under this subpart.

§ 303.103 Processing.

(a) *Processing.* The 30-day notice period specified in § 303.102(a) shall begin on the date substantially all information required to be submitted by the notificant pursuant to § 303.102(c)(1) is received by the appropriate FDIC office. The FDIC shall notify the bank submitting the notice of the date on which the notice is accepted for processing and of the date on which the 30-day notice period will expire. If processing cannot be completed within 30 days, the notificant will be advised in writing, prior to expiration of the 30-day period, of the reason for the delay in processing and of the additional time period, not to exceed 60 days, in which processing will be completed.

(b) *Commencement of service*—(1) *At expiration of period.* A proposed director or senior executive officer may begin service after the end of the 30-day period or any other additional period as provided under paragraph (a) of this section, unless the FDIC disapproves the notice before the end of the period.

(2) *Prior to expiration of period.* A proposed director or senior executive officer may begin service before the end of the 30-day period or any additional time period as provided under paragraph (a) of this section, if the FDIC notifies the bank and the individual in writing of the FDIC's intention not to disapprove the notice.

(c) *Notice of disapproval.* The FDIC may disapprove a notice filed under § 303.102 if the FDIC finds that the competence, experience, character, or integrity of the individual with respect to whom the notice is submitted indicates that it would not be in the best interests of the depositors of the bank or in the best interests of the public to permit the individual to be employed by, or associated with, the bank. Subpart L of 12 CFR part 308 sets forth the rules of practice and procedure for a notice of disapproval.

§§ 303.104–303.119 [Reserved]

Subpart G—Activities of Insured State Banks

§ 303.120 Scope.

This subpart sets forth procedures for complying with notice and application requirements contained in subpart A of part 362 of this chapter, governing insured state banks and their subsidiaries engaging in activities which are not permissible for national banks and their subsidiaries. This subpart sets forth procedures for complying with notice and application requirements contained in subpart B of part 362 of this chapter, governing certain activities of insured state nonmember banks, their subsidiaries, and certain affiliates. This subpart also sets forth procedures for complying with the notice requirements contained in subpart E of part 362 of this chapter, governing subsidiaries of insured state nonmember banks engaging in financial activities.

§ 303.121 Filing procedures.

(a) *Where to file.* A notice or application required by subpart A, subpart B, or subpart E of part 362 of this chapter shall be submitted in writing to the appropriate FDIC office.

(b) *Contents of filing.* A complete letter notice or letter application shall include the following information:

(1) *Filings generally.* (i) A brief description of the activity and the manner in which it will be conducted;

(ii) The amount of the bank's existing or proposed direct or indirect investment in the activity as well as calculations sufficient to indicate compliance with any specific capital ratio or investment percentage limitation detailed in subpart A, B, or E of part 362 of this chapter;

(iii) A copy of the bank's business plan regarding the conduct of the activity;

(iv) A citation to the state statutory or regulatory authority for the conduct of the activity;

(v) A copy of the order or other document from the appropriate regulatory authority granting approval for the bank to conduct the activity if such approval is necessary and has already been granted;

(vi) A brief description of the bank's policy and practice with regard to any anticipated involvement in the activity by a director, executive office or principal shareholder of the bank or any related interest of such a person; and

(vii) A description of the bank's expertise in the activity.

(2) [Reserved]

(3) *Copy of application or notice filed with another agency.* If an insured state bank has filed an application or notice with another federal or state regulatory authority which contains all of the information required by paragraph (b)(1) of this section, the insured state bank may submit a copy to the FDIC in lieu of a separate filing.

(4) *Additional information.* The FDIC may request additional information to complete processing.

§ 303.122 Processing.

(a) *Expedited processing.* A notice filed by an insured state bank seeking to commence or continue an activity under § 362.3(a)(2)(iii)(A)(2), § 362.4(b)(3)(i), or § 362.4(b)(5) of this chapter will be acknowledged in writing by the FDIC and will receive expedited processing, unless the applicant is notified in writing to the contrary and provided a basis for that decision. The FDIC may remove the notice from expedited processing for any of the reasons set forth in § 303.11(c)(2). Absent such removal, a notice processed under expedited processing is deemed approved 30 days after receipt of a complete notice by the FDIC (subject to extension for an additional 15 days upon written notice to the bank) or on such earlier date authorized by the FDIC in writing.

(b) *Standard processing for applications and notices that have been removed from expedited processing.* For an application filed by an insured state bank seeking to commence or continue an activity under § 362.3(a)(2)(iii)(A)(2), § 362.3(b)(2)(i), § 362.3(b)(2)(ii)(A), § 362.3(b)(2)(ii)(C), § 362.4(b)(1), § 362.4(b)(4), § 362.5(b)(2), or § 362.8(b) or seeking a waiver or modification under § 362.18(e) or § 362.18(g)(3) of this chapter or for notices which are not processed pursuant to the expedited processing procedures, the FDIC will provide the insured State bank with written notification of the final action as soon as the decision is rendered. The FDIC will normally review and act in such cases within 60 days after receipt of a completed application or notice (subject to extension for an additional 30 days upon written notice to the bank), but failure of the FDIC to act prior to the expiration of these periods does not constitute approval.

§§ 303.123–303.139 [Reserved]

Subpart H—Activities of Insured Savings Associations

§ 303.140 Scope.

This subpart sets forth procedures for complying with the notice and application requirements contained in subpart C of part 362 of this chapter, governing insured state savings

associations and their service corporations engaging in activities which are not permissible for federal savings associations and their service corporations. This subpart also sets forth procedures for complying with the notice requirements contained in subpart D of part 362 of this chapter, governing insured savings associations which establish or engage in new activities through a subsidiary.

§ 303.141 Filing procedures.

(a) *Where to file.* All applications and notices required by subpart C or subpart D of part 362 of this chapter are to be in writing and filed with the appropriate FDIC office.

(b) *Contents of filing*—(1) *Filings generally.* A complete letter notice or letter application shall include the following information:

(i) A brief description of the activity and the manner in which it will be conducted;

(ii) The amount of the association's existing or proposed direct or indirect investment in the activity as well as calculations sufficient to indicate compliance with any specific capital ratio or investment percentage limitation detailed in subpart C or D of part 362 of this chapter;

(iii) A copy of the association's business plan regarding the conduct of the activity;

(iv) A citation to the state statutory or regulatory authority for the conduct of the activity;

(v) A copy of the order or other document from the appropriate regulatory authority granting approval for the association to conduct the activity if such approval is necessary and has already been granted;

(vi) A brief description of the association's policy and practice with regard to any anticipated involvement in the activity by a director, executive officer or principal shareholder of the association or any related interest of such a person; and

(vii) A description of the association's expertise in the activity.

(2) [Reserved]

(3) *Copy of application or notice filed with another agency.* If an insured savings association has filed an application or notice with another federal or state regulatory authority which contains all of the information required by paragraph (b)(1) of this section, the insured state bank may submit a copy to the FDIC in lieu of a separate filing.

(4) *Additional information.* The FDIC may request additional information to complete processing.

§ 303.142 Processing.

(a) *Expedited processing.* A notice filed by an insured state savings association seeking to commence or continue an activity under § 362.11(b)(2)(ii) of this chapter will be acknowledged in writing by the FDIC and will receive expedited processing, unless the applicant is notified in writing to the contrary and provided a basis for that decision. The FDIC may remove the notice from expedited processing for any of the reasons set forth in § 303.11(c)(2). Absent such removal, a notice processed under expedited processing is deemed approved 30 days after receipt of a complete notice by the FDIC (subject to extension for an additional 15 days upon written notice to the bank) or on such earlier date authorized by the FDIC in writing.

(b) *Standard processing for applications and notices that have been removed from expedited processing.* For an application filed by an insured state savings association seeking to commence or continue an activity under § 362.11(a)(2)(ii), § 362.11(b)(2)(i), § 362.12(b)(1) of this chapter or for notices which are not processed pursuant to the expedited processing procedures, the FDIC will provide the insured state savings association with written notification of the final action as soon as the decision is rendered. The FDIC will normally review and act in such cases within 60 days after receipt of a completed application or notice (subject to extension for an additional 30 days upon written notice to the bank), but failure of the FDIC to act prior to the expiration of these periods does not constitute approval.

(c) *Notices of activities in excess of an amount permissible for a federal savings association; subsidiary notices.* Receipt of a notice filed by an insured state savings association as required by § 362.11(b)(3) or § 362.15 of this chapter will be acknowledged in writing by the FDIC. The notice will be reviewed at the appropriate FDIC office, which will take such action as it deems necessary and appropriate.

§§ 303.143—303.159 [Reserved]

Subpart I—Mutual-To-Stock Conversions

§ 303.160 Scope.

This subpart sets forth the notice requirements and procedures for the conversion of an insured mutual state-chartered savings bank to the stock form of ownership. The substantive requirements governing such conversions are contained in § 333.4 of this chapter.

§ 303.161 Filing procedures.

(a) *Prior notice required.* In addition to complying with the substantive requirements in § 333.4 of this chapter, an insured state-chartered mutually owned savings bank that proposes to convert from mutual to stock form shall file with the FDIC a notice of intent to convert to stock form.

(b) *General.* (1) A notice required under this subpart shall be filed in letter form with the appropriate FDIC office at the same time as required conversion application materials are filed with the institution's state regulator.

(2) An insured mutual savings bank chartered by a state that does not require the filing of a conversion application shall file a notice in letter form with the appropriate FDIC office as soon as practicable after adoption of its plan of conversion.

(c) *Content of notice.* The notice shall provide a description of the proposed conversion and include all materials that have been filed with any state or federal banking regulator and any state or federal securities regulator. At a minimum, the notice shall include, as applicable, copies of:

(1) The plan of conversion, with specific information concerning the record date used for determining eligible depositors and the subscription offering priority established in connection with any proposed stock offering;

(2) Certified board resolutions relating to the conversion;

(3) A business plan, including a detailed discussion of how the capital acquired in the conversion will be used, expected earnings for at least a three-year period following the conversion, and a justification for any proposed stock repurchases;

(4) The charter and bylaws of the converted institution;

(5) The bylaws and operating plans of any other entities formed in connection with the conversion transaction, such as a holding company or charitable foundation;

(6) A full appraisal report, prepared by an independent appraiser, of the value of the converting institution and the pricing of the stock to be sold in the conversion transaction;

(7) Detailed descriptions of any proposed management or employee stock benefit plans or employment agreements and a discussion of the rationale for the level of benefits proposed, individually and by participant group;

(8) Indemnification agreements;

(9) A preliminary proxy statement and sample proxy;

(10) Offering circular(s) and order form;

(11) All contracts or agreements relating to solicitation, underwriting, market-making, or listing of conversion stock and any agreements among members of a group regarding the purchase of unsubscribed shares;

(12) A tax opinion concerning the federal income tax consequences of the proposed conversion;

(13) Consents from experts to use their opinions as part of the notice; and

(14) An estimate of conversion-related expenses.

(d) *Additional information.* The FDIC, in its discretion, may request any additional information it deems necessary to evaluate the proposed conversion. The institution proposing to convert from mutual to stock form shall promptly provide such information to the FDIC.

(e) *Acceptance of notice.* The 60-day notice period specified in § 303.163 shall commence on the date of receipt of a substantially complete notice. The FDIC shall notify the institution proposing to convert in writing of the date the notice is accepted.

(f) *Related applications.* Related applications that require FDIC action may include:

(1) Applications for deposit insurance, as required by subpart B of this part; and

(2) Applications for consent to merge, as required by subpart D of this part.

§ 303.162 Waiver from compliance.

(a) *General.* An institution proposing to convert from mutual to stock form may file with the appropriate FDIC office a letter requesting waiver of compliance with this subpart or § 333.4 of this chapter:

(1) When compliance with any provision of this section or § 333.4 of this chapter would be inconsistent or in conflict with applicable state law, or

(2) For any other good cause shown.

(b) *Content of filing.* In making a request for waiver under paragraph (a) of this section, the institution shall demonstrate that the requested waiver, if granted, would not result in any effects that would be detrimental to the safety and soundness of the institution, entail a breach of fiduciary duty on part of the institution's management or otherwise be detrimental or inequitable to the institution, its depositors, any other insured depository institution(s), the federal deposit insurance funds, or to the public interest.

§ 303.163 Processing.

(a) *General considerations.* The FDIC shall review the notice and other materials submitted by the institution proposing to convert from mutual to stock form, specifically considering the following factors:

(1) The proposed use of the proceeds from the sale of stock, as set forth in the business plan;

(2) The adequacy of the disclosure materials;

(3) The participation of depositors in approving the transaction;

(4) The form of the proxy statement required for the vote of the depositors/members on the conversion;

(5) Any proposed increased compensation and other remuneration (including stock grants, stock option rights and other similar benefits) to be granted to officers and directors/trustees of the bank in connection with the conversion;

(6) The adequacy and independence of the appraisal of the value of the mutual savings bank for purposes of determining the price of the shares of stock to be sold;

(7) The process by which the bank's trustees approved the appraisal, the pricing of the stock, and the proposed compensation arrangements for insiders;

(8) The nature and apportionment of stock subscription rights; and

(9) The bank's plans to fulfill its commitment to serving the convenience and needs of its community.

(b) *Additional considerations.* (1) In reviewing the notice and other materials submitted under this subpart, the FDIC will take into account the extent to which the proposed conversion transaction conforms with the various provisions of the mutual-to-stock conversion regulations of the Office of Thrift Supervision (OTS) (12 CFR part 563b), as currently in effect at the time the notice is submitted. Any non-conformity with those provisions will be closely reviewed.

(2) Conformity with the OTS requirements will not be sufficient for FDIC regulatory purposes if the FDIC determines that the proposed conversion transaction would pose a risk to the bank's safety or soundness, violate any law or regulation, or present a breach of fiduciary duty.

(c) *Notice period.* (1) The period in which the FDIC may object to the proposed conversion transaction shall be the later of:

(i) 60 days after receipt of a substantially complete notice of proposed conversion; or

(ii) 20 days after the last applicable state or other federal regulator has approved the proposed conversion.

(2) The FDIC may, in its discretion, extend the initial 60-day period for up to an additional 60 days by providing written notice to the institution.

(d) *Letter of non-objection.* If the FDIC determines, in its discretion, that the proposed conversion transaction would not pose a risk to the institution's safety or soundness, violate any law or regulation, or present a breach of fiduciary duty, then the FDIC shall issue to the institution proposing to convert a letter of non-objection to the proposed conversion.

(e) *Letter of objection.* If the FDIC determines, in its discretion, that the proposed conversion transaction poses a risk to the institution's safety or soundness, violates any law or regulation, or presents a breach of fiduciary duty, then the FDIC shall issue a letter to the institution stating its objection(s) to the proposed conversion and advising the institution not to consummate the proposed conversion until such letter is rescinded. A copy of the letter of objection shall be furnished to the institution's primary state regulator and any other state or federal banking regulator and state or federal securities regulator involved in the conversion.

(f) *Consummation of the conversion.* (1) An institution may consummate the proposed conversion upon either:

(i) The receipt of a letter of non-objection; or

(ii) The expiration of the notice period.

(2) If a letter of objection is issued, then the institution shall not consummate the proposed conversion until the FDIC rescinds such letter.

§§ 303.164–303.179 [Reserved]

Subpart J—International Banking

§ 303.180 Scope.

This subpart sets forth procedures for complying with application requirements relating to the foreign activities of insured state nonmember banks, U.S. activities of insured branches of foreign banks, and certain foreign mergers of insured depository institutions.

§ 303.181 Definitions.

For the purposes of this subpart, the following additional definitions apply:

(a) *Board of Governors* means the Board of Governors of the Federal Reserve System.

(b) *Comptroller* means the Office of the Comptroller of the Currency.

(c) *Eligible insured branch.* An insured branch will be treated as an eligible depository institution within

the meaning of § 303.2(r) if the insured branch:

(1) Received an FDIC-assigned composite ROCA supervisory rating (which rates risk management, operational controls, compliance, and asset quality) of 1 or 2 as a result of its most recent federal or state examination, and the FDIC, Comptroller, or Board of Governors have not expressed concern about the condition or operations of the foreign banking organization or the support it offers the branch;

(2) Received a satisfactory or better Community Reinvestment Act (CRA) rating from its primary federal regulator at its most recent examination, if the depository institution is subject to examination under part 345 of this chapter;

(3) Received a compliance rating of 1 or 2 from its primary federal regulator at its most recent examination;

(4) Is well-capitalized as defined in subpart B of part 325 of this chapter; and

(5) Is not subject to a cease and desist order, consent order, prompt corrective action directive, written agreement, memorandum of understanding, or other administrative agreement with any U.S. bank regulatory authority.

(d) *Federal branch* means a federal branch of a foreign bank as defined by § 347.202 of this chapter.

(e) *Foreign bank* means a foreign bank as defined by § 347.202 of this chapter.

(f) *Foreign branch* means a foreign branch of an insured state nonmember bank as defined by § 347.102 of this chapter.

(g) *Foreign organization* means a foreign organization as defined by § 347.102 of this chapter.

(h) *Insured branch* means an insured branch of a foreign bank as defined by § 347.202 of this chapter.

(i) *Noninsured branch* means a noninsured branch of a foreign bank as defined by § 347.202 of this chapter.

(j) *State branch* means a state branch of a foreign bank as defined by § 347.202 of this chapter.

§ 303.182 Establishing, moving or closing a foreign branch of a state nonmember bank; § 347.103.

(a) *Notice procedures for general consent.* Notice in the form of a letter from an eligible depository institution establishing or relocating a foreign branch pursuant to § 347.103(b) of this chapter shall be provided to the appropriate FDIC office no later than 30 days after taking such action, and include the location of the foreign branch, including a street address, and a statement that the foreign branch has not been located on a site on the World Heritage List or on the foreign country's equivalent of the National Register of Historic Places (National Register), in accordance with section 402 of the National Historic Preservation Act Amendments of 1980 (NHPA Amendments Act) (16 U.S.C. 470a–2). The FDIC will provide written acknowledgment of receipt of the notice.

(b) Filing procedures for other branch establishments—(1)*Where to file.* An applicant seeking to establish a foreign branch other than under § 347.103(b) of this chapter shall submit an application to the appropriate FDIC office.

(2) *Content of filing.* A complete letter application shall include the following information:

(i) The exact location of the proposed foreign branch, including the street address, and a statement whether the foreign branch will be located on a site on the World Heritage List or on the foreign country's equivalent of the National Register, in accordance with section 402 of the NHPA Amendments Act;

(ii) Details concerning any involvement in the proposal by an insider of the applicant, as defined in § 303.2(u), including any financial arrangements relating to fees, the acquisition of property, leasing of property, and construction contracts;

(iii) A brief description of the applicant's business plan with respect to the foreign branch; and

(iv) A brief description of the activities of the branch, and to the extent any activities are not authorized by § 347.103(a) of this chapter, the applicant's reasons why they should be approved.

(3) *Additional information.* The FDIC may request additional information to complete processing.

(c) *Processing*—(1) *Expedited processing for eligible depository institutions.* An application filed under § 347.103(c) of this chapter by an eligible depository institution as defined in § 303.2(r) of this part seeking to establish a foreign branch by expedited processing will be acknowledged in writing by the FDIC and will receive expedited processing, unless the applicant is notified in writing to the contrary and provided with the basis for that decision. The FDIC may remove the application from expedited processing for any of the reasons set forth in § 303.11(c)(2). Absent such removal, an application processed under expedited processing is deemed approved 45 days after receipt of a substantially complete application by the FDIC, or on such earlier date authorized by the FDIC in writing.

(2) *Standard processing.* For those applications which are not processed pursuant to the expedited procedures, the FDIC will provide the applicant with written notification of the final action when the decision is rendered.

(d) *Closing.* Notices of branch closing under § 347.103(f) of this chapter, in the form of a letter including the name, location, and date of closing of the closed branch, shall be filed with the appropriate FDIC office no later than 30 days after the branch is closed.

§ 303.183 Investment by insured state nonmember banks in foreign organizations; § 347.108.

(a) *Notice procedures for general consent.* Notice in the form of a letter from an eligible depository institution making direct or indirect investments in a foreign organization pursuant to § 347.108(a) of this chapter shall be provided to the appropriate FDIC office no later than 30 days after taking such action. The FDIC will provide written acknowledgment of receipt of the notice.

(b) *Filing procedures for other investments*—(1) *Where to file.* An applicant seeking to make a foreign investment other than under § 347.108(a) of this chapter shall submit an application to the appropriate FDIC office.

(2) *Content of filing.* A complete application shall include the following information:

(i) Basic information about the terms of the proposed transaction, the amount of the investment in the foreign organization and the proportion of its ownership to be acquired;

(ii) Basic information about the foreign organization, its financial position and income, including any available balance sheet and income statement for the prior year, or financial projections for a new foreign organization;

(iii) A listing of all shareholders known to hold ten percent or more of any class of the foreign organization's stock or other evidence of ownership, and the amount held by each;

(iv) A brief description of the applicant's business plan with respect to the foreign organization;

(v) A brief description of any business or activities which the foreign organization will conduct directly or indirectly in the United States, and to the extent such activities are not authorized by subpart A of part 347, the applicant's reasons why they should be approved;

(vi) A brief description of the foreign organization's activities, and to the extent such activities are not authorized

by subpart A of part 347, the applicant's reasons why they should be approved; and

(vii) If the applicant seeks approval to engage in underwriting or dealing activities, a description of the applicant's plans and procedures to address all relevant risks.

(3) *Additional information.* The FDIC may request additional information to complete processing.

(c) *Processing*—(1) *Expedited processing for eligible depository institutions.* An application filed under § 347.108(b) of this chapter by an eligible depository institution as defined in § 303.2(r) seeking to make direct or indirect investments in a foreign organization will be acknowledged in writing by the FDIC and will receive expedited processing, unless the applicant is notified in writing to the contrary and provided with the basis for that decision. The FDIC may remove the application from expedited processing for any of the reasons set forth in § 303.11(c)(2). Absent such removal, an application processed under expedited processing is deemed approved 45 days after receipt of a complete application by the FDIC, or on such earlier date authorized by the FDIC in writing.

(2) *Standard processing.* For those applications which are not processed pursuant to the expedited procedures, the FDIC will provide the applicant with written notification of the final action when the decision is rendered.

(d) *Divestiture.* If an insured state nonmember bank holding 50 percent or more of the voting equity interests of a foreign organization or otherwise controlling the foreign organization divests itself of such ownership or control, the insured state nonmember bank shall file a notice in the form of a letter, including the name, location, and date of divestiture of the foreign organization, with the appropriate FDIC office no later than 30 days after the divestiture.

§ 303.184 Moving an insured branch of a foreign bank.

(a) *Filing procedures*—(1) *Where and when to file.* An application by an insured branch of a foreign bank seeking the FDIC's consent to move from one location to another, as required by section 18(d)(1) of the FDI Act (12 U.S.C. 1828(d)(1)), shall be submitted in writing to the appropriate FDIC office on the date the notice required by paragraph (c) of this section is published, or within 5 days after the date of the last required publication.

(2) *Content of filing.* A complete letter application shall include the following information:

(i) The exact location of the proposed site, including the street address;

(ii) Details concerning any involvement in the proposal by an insider of the applicant, as defined in § 303.2(u), including any financial arrangements relating to fees, the acquisition of property, leasing of property, and construction contracts;

(iii) A statement of the impact of the proposal on the human environment, including information on compliance with local zoning laws and regulations and the effect on traffic patterns, for purposes of complying with the applicable provisions of the NEPA, and the FDIC ''Statement of Policy on NEPA'' (1 FDIC Law, Regulations, Related Acts 5185; see §309.4(a) and (b) of this chapter for availability).

(iv) A statement as to whether or not the site is eligible for inclusion in the National Register of Historic Places for purposes of complying with the applicable provisions of the NHPA, and the FDIC AStatement of Policy on NHPA'' (1 FDIC Law, Regulations, Related Acts 5175; see § 309.4(a) and (b) of this chapter for availability), including documentation of consultation with the State Historic Preservation Officer, as appropriate.

(v) Comments on any changes in services to be offered, the community to be served, or any other effect the proposal may have on the applicant's compliance with the CRA; and

(vi) A copy of the newspaper publication required by paragraph (c) of this section, as well as the name and address of the newspaper and the date of the publication.

(3) *Comptroller's application.* If the applicant is filing an application with the Comptroller which contains the information required by paragraph (a)(2) of this section, the applicant may submit a copy to the FDIC in lieu of a separate application.

(4) *Additional information.* The FDIC may request additional information to complete processing.

(b) *Processing*—(1) *Expedited processing for eligible insured branches.* An application filed by an eligible insured branch as defined in § 303.181(c) will be acknowledged in writing by the FDIC and will receive expedited processing, unless the applicant is notified to the contrary and provided with the basis for that decision. The FDIC may remove an application from expedited processing for any of the reasons set forth in § 303.11(c)(2). Absent such removal, an application processed under expedited processing will be deemed approved on the latest of the following:

(i) The 21st day after the FDIC's receipt of a substantially complete application; or

(ii) The 5th day after expiration of the comment period described in paragraph (c) of this section.

(2) *Standard processing.* For those applications that are not processed pursuant to the expedited procedures, the FDIC will provide the applicant with written notification of the final action as soon as the decision is rendered.

(c) *Publication requirement and comment period*—(1) *Newspaper publications.* The applicant shall publish a notice of its proposal to move from one location to another, as described in § 303.7(b), in a newspaper of general circulation in the community in which the insured branch is located prior to its being moved and in the community to which it is to be moved. The notice shall include the insured branch's current and proposed addresses.

(2) *Public comments.* All public comments must be received by the appropriate regional director within 15 days after the date of the last newspaper publication required by paragraph (c)(1) of this section, unless the comment period has been extended or reopened in accordance with § 303.9(b)(2).

(3) *Lobby notices.* If the insured branch has a public lobby, a copy of the newspaper publication shall be posted in the public lobby for at least 15 days beginning on the date of the publication required by paragraph (c)(1) of this section.

(d) *Other approval criteria.* (1) The FDIC may approve an application under this section if the criteria in paragraphs (d)(1)(i) through (d)(1)(vi) of this section is satisfied.

(i) The factors set forth in section 6 of the FDI Act (12 U.S.C. 1816) have been considered and favorably resolved;

(ii) The applicant is at least adequately capitalized as defined in subpart B of part 325 of this chapter;

(iii) Any financial arrangements which have been made in connection with the proposed relocation and which involve the applicant's directors, officers, major shareholders, or their interests are fair and reasonable in comparison to similar arrangements that could have been made with independent third parties;

(iv) Compliance with the CRA, the NEPA, the NHPA and any applicable related regulations, including 12 CFR part 345, has been considered and favorably resolved;

(v) No CRA protest as defined in § 303.2(l) has been filed which remains unresolved or, where such a protest has

been filed and remains unresolved, the Director or designee concurs that approval is consistent with the purposes of the CRA and the applicant agrees in writing to any conditions imposed regarding the CRA; and

(vi) The applicant agrees in writing to comply with any conditions imposed by the FDIC, other than the standard conditions defined in § 303.2(dd) which may be imposed without the applicant's written consent.

§ 303.185 Merger transactions involving foreign banks or foreign organizations.

(a) *Merger transactions involving an insured branch of a foreign bank.* Merger transactions requiring the FDIC's prior approval as set forth in § 303.62 include any merger transaction in which the resulting institution is an insured branch of a foreign bank which is not a federal branch, or any merger transaction which involves any insured branch and any uninsured institution. In such cases:

(1) References to an eligible depository institution in subpart D of this part include an eligible insured branch as defined in § 303.181;

(2) The definition of a corporate reorganization in § 303.61(b) includes a merger transaction between an insured branch and other branches, agencies, or subsidiaries in the United States of the same foreign bank; and

(3) For the purposes of § 303.62(b)(1) on interstate mergers, a merger transaction involving an insured branch is one involving the acquisition of a branch of an insured bank without the acquisition of the bank for purposes of section 44 of the FDI Act (12 U.S.C. 1831u) only when the merger transaction involves fewer than all the insured branches of the same foreign bank in the same state.

(b) *Certain merger transactions with foreign organizations outside any State.* Merger transactions requiring the FDIC's prior approval as set forth in § 303.62 include any merger transaction in which an insured depository institution becomes directly liable for obligations which will, after the merger transaction, be treated as deposits under section 3(l)(5)(A)(i)–(ii) of the FDI Act (12 U.S.C. 1813(l)(5)(A)(i)–(ii)), as a result of a merger or consolidation with a foreign organization or an assumption of liabilities of a foreign organization.

§ 303.186 Exemptions from insurance requirement for a state branch of a foreign bank; § 347.206.

(a) *Filing procedures*—(1) *Where to file.* An application by a state branch for consent to operate as a noninsured state branch, as permitted by § 347.206(b) of this chapter, shall be submitted in writing to the appropriate FDIC office.

(2) *Content of filing.* A complete letter application shall include the following information:

(i) The kinds of deposit activities in which the state branch proposes to engage;

(ii) The expected source of deposits;

(iii) The manner in which deposits will be solicited;

(iv) How the activity will maintain or improve the availability of credit to all sectors of the United States economy, including the international trade finance sector;

(v) That the activity will not give the foreign bank an unfair competitive advantage over United States banking organizations; and

(vi) A resolution by the applicant's board of directors, or evidence of approval by senior management if a resolution is not required pursuant to the applicant's organizational documents, authorizing the filing of the application.

(3) *Additional information.* The FDIC may request additional information to complete processing.

(4) *Processing.* The FDIC will provide the applicant with written notification of the final action taken.

§ 303.187 Approval for an insured state branch of a foreign bank to conduct activities not permissible for federal branches; § 347.213.

(a) *Filing procedures*—(1) *Where to file.* An application by an insured state branch seeking approval to conduct activities not permissible for a federal branch, as required by § 347.213(a) of this chapter, shall be submitted in writing to the appropriate FDIC office.

(2) *Content of filing.* A complete letter application shall include the following information:

(i) A brief description of the activity, including the manner in which it will be conducted and an estimate of the expected dollar volume associated with the activity;

(ii) An analysis of the impact of the proposed activity on the condition of the United States operations of the foreign bank in general and of the branch in particular, including a copy of the feasibility study, management plan, financial projections, business plan, or similar document concerning the conduct of the activity;

(iii) A resolution by the applicant's board of directors, or evidence of approval by senior management if a resolution is not required pursuant to the applicant's organizational documents, authorizing the filing of the application;

(iv) A statement by the applicant of whether it is in compliance with §§ 347.210 and 347.211 of this chapter, Pledge of assets and Asset maintenance, respectively;

(v) A statement by the applicant that it has complied with all requirements of the Board of Governors concerning applications to conduct the activity in question and the status of each such application, including a copy of the Board of Governors' disposition of such application, if applicable; and

(vi) A statement of why the activity will pose no significant risk to the Bank Insurance Fund.

(3) *Board of Governors application.* If the application to the Board of Governors contains the information required by paragraph (a) of this section, the applicant may submit a copy to the FDIC in lieu of a separate letter application.

(4) *Additional information.* The FDIC may request additional information to complete processing.

(b) *Divestiture or cessation*—(1) *Where to file.* Divestiture plans necessitated by a change in law or other authority, as required by § 347.213(e) of this chapter, shall be submitted in writing to the appropriate FDIC office.

(2) *Content of filing.* A complete letter application shall include the following information:

(i) A detailed description of the manner in which the applicant proposes to divest itself of or cease the activity in question; and

(ii) A projected timetable describing how long the divestiture or cessation is expected to take.

(3) *Additional information.* The FDIC may request additional information to complete processing.

§§ 303.188–303.199 [Reserved]

Subpart K—Prompt Corrective Action

§ 303.200 Scope.

(a) *General.* (1) This subpart covers applications filed pursuant to section 38 of the FDI Act (12 U.S.C. 1831*o*), which requires insured depository institutions that are not adequately capitalized to receive approval prior to engaging in certain activities. Section 38 restricts or prohibits certain activities and requires an insured depository institution to submit a capital restoration plan when it becomes undercapitalized. The restrictions and prohibitions become more severe as an institution's capital level declines.

(2) Definitions of the capital categories referenced in this Prompt Corrective Action subpart may be found in subpart B of part 325 of this chapter,

§ 325.103(b) for state nonmember banks and § 325.103(c) for insured branches of foreign banks.

(b) *Institutions covered.* Restrictions and prohibitions contained in subpart B of part 325 of this chapter apply primarily to insured state nonmember banks and insured branches of foreign banks, as well as to directors and senior executive officers of those institutions. Portions of subpart B of part 325 of this chapter also apply to all insured depository institutions that are deemed to be critically undercapitalized.

§ 303.201 Filing procedures.

Applications shall be filed with the appropriate FDIC office. The application shall contain the information specified in each respective section of this subpart, and shall be in letter form as prescribed in § 303.3. Additional information may be requested by the FDIC. Such letter shall be signed by the president, senior officer or a duly authorized agent of the insured depository institution and be accompanied by a certified copy of a resolution adopted by the institution's board of directors or trustees authorizing the application.

§ 303.202 Processing.

The FDIC will provide the applicant with a subsequent written notification of the final action taken as soon as the decision is rendered.

§ 303.203 Applications for capital distributions.

(a) *Scope.* An insured state nonmember bank and any insured branch of a foreign bank shall submit an application for capital distribution if, after having made a capital distribution, the institution would be undercapitalized, significantly undercapitalized, or critically undercapitalized.

(b) *Content of filing.* An application to repurchase, redeem, retire or otherwise acquire shares or ownership interests of the insured depository institution shall describe the proposal, the shares or obligations which are the subject thereof, and the additional shares or obligations of the institution which will be issued in at least an amount equivalent to the distribution. The application also shall explain how the proposal will reduce the institution's financial obligations or otherwise improve its financial condition. If the proposed action also requires an application under section 18(i) of the FDI Act (12 U.S.C. 1828(i)) as implemented by § 303.241 of this part regarding prior consent to retire capital, such application should be filed concurrently with, or made a part of, the application filed pursuant to section 38 of the FDI Act (12 U.S.C. 1831*o*).

§ 303.204 Applications for acquisitions, branching, and new lines of business.

(a) *Scope.* (1) Any insured state nonmember bank and any insured branch of a foreign bank which is undercapitalized or significantly undercapitalized, and any insured depository institution which is critically undercapitalized, shall submit an application to engage in acquisitions, branching or new lines of business.

(2) A new line of business will include any new activity exercised which, although it may be permissible, has not been exercised by the institution.

(b) *Content of filing.* Applications shall describe the proposal, state the date the institution's capital restoration plan was accepted by its primary federal regulator, describe the institution's status in implementing the plan, and explain how the proposed action is consistent with and will further the achievement of the plan or otherwise further the purposes of section 38 of the FDI Act. If the FDIC is not the applicant's primary federal regulator, the application also should state whether approval has been requested from the applicant's primary federal regulator, the date of such request and the disposition of the request, if any. If the proposed action also requires applications pursuant to section 18 (c) or (d) of the FDI Act (mergers and branches) (12 U.S.C. 1828 (c) or (d)), such applications should be filed concurrently with, or made a part of, the application filed pursuant to section 38 of the FDI Act (12 U.S.C. 1831*o*).

§ 303.205 Applications for bonuses and increased compensation for senior executive officers.

(a) *Scope.* Any insured state nonmember bank or insured branch of a foreign bank that is significantly or critically undercapitalized, or any insured state nonmember bank or any insured branch of a foreign bank that is undercapitalized and which has failed to submit or implement in any material respect an acceptable capital restoration plan, shall submit an application to pay a bonus or increase compensation for any senior executive officer.

(b) *Content of filing.* Applications shall list each proposed bonus or increase in compensation, and for the latter shall identify compensation for each of the twelve calendar months preceding the calendar month in which the institution became undercapitalized. Applications also shall state the date the institution's capital restoration plan was accepted by the FDIC, and describe any progress made in implementing the plan.

§ 303.206 Application for payment of principal or interest on subordinated debt.

(a) *Scope.* Any critically undercapitalized insured depository institution shall submit an application to pay principal or interest on subordinated debt.

(b) *Content of filing.* Applications shall describe the proposed payment and provide an explanation of action taken under section 38(h)(3)(A)(ii) of the FDI Act (action other than receivership or conservatorship). The application also shall explain how such payments would further the purposes of section 38 of the FDI Act (12 U.S.C. 1831*o*). Existing approvals pursuant to requests filed under section 18(i)(1) of the FDI Act (12 U.S.C. 1828(i)(1)) (capital stock reductions or retirements) shall not be deemed to be the permission needed pursuant to section 38.

§ 303.207 Restricted activities for critically undercapitalized institutions.

(a) *Scope.* Any critically undercapitalized insured depository institution shall submit an application to engage in certain restricted activities.

(b) *Content of filing.* Applications to engage in any of the following activities, as set forth in sections 38(i)(2) (A) through (G) of the FDI Act, shall describe the proposed activity and explain how the activity would further the purposes of section 38 of the FDI Act (12 U.S.C. 1831*o*):

(1) Enter into any material transaction other than in the usual course of business including any action with respect to which the institution is required to provide notice to the appropriate federal banking agency. Materiality will be determined on a case-by-case basis;

(2) Extend credit for any highly leveraged transaction (as defined in part 325 of this chapter);

(3) Amend the institution's charter or bylaws, except to the extent necessary to carry out any other requirement of any law, regulation, or order;

(4) Make any material change in accounting methods;

(5) Engage in any covered transaction (as defined in section 23A(b) of the Federal Reserve Act (12 U.S.C. 371c(b));

(6) Pay excessive compensation or bonuses. Part 364 of this chapter provides guidance for determining excessive compensation; or

(7) Pay interest on new or renewed liabilities at a rate that would increase the institution's weighted average cost

of funds to a level significantly exceeding the prevailing rates of interest on insured deposits in the institution's normal market area. Section 337.6 of this chapter (Brokered deposits) provides guidance for defining the relevant terms of this provision; however this provision does not supersede the general prohibitions contained in § 337.6.

§§ 303.208—303.219 [Reserved]

Subpart L—Section 19 of the FDI Act (Consent to Service of Persons Convicted of Certain Criminal Offenses)

§ 303.220 Scope.

This subpart covers applications under section 19 of the FDI Act (12 U.S.C. 1829). Pursuant to section 19, any person who has been convicted of any criminal offense involving dishonesty, breach of trust, or money laundering, or has agreed to enter into a pretrial diversion or similar program in connection with a prosecution for such offense, may not become, or continue as, an institution-affiliated party of an insured depository institution; own or control, directly or indirectly, any insured depository institution; or otherwise participate, directly or indirectly, in the conduct of the affairs of any insured depository institution without the prior written consent of the FDIC.

§ 303.221 Filing procedures.

(a) *Where to file.* An application under section 19 of the FDI Act shall be filed with the appropriate FDIC office.

(b) *Contents of filing.* Application forms may be obtained from any FDIC regional director. The FDIC may require additional information beyond that sought in the form, as warranted, in individual cases.

§ 303.222 Service at another insured depository institution.

In the case of a person who has already been approved by the FDIC under this subpart or section 19 of the FDI Act in connection with a particular insured depository institution, such person may not become an institution affiliated party, or own or control directly or indirectly another insured depository institution, or participate in the conduct of the affairs of another insured depository institution, without the prior written consent of the FDIC.

§ 303.223 Applicant's right to hearing following denial.

An applicant may request a hearing following a denial of an application in accordance with the provisions of part 308 of this chapter.

§§ 303.224—303.239 [Reserved]

Subpart M—Other Filings

§ 303.240 General.

This subpart sets forth the filing procedures to be followed when seeking the FDIC's consent to engage in certain activities or accomplish other matters as specified in the individual sections contained herein. For those matters covered by this subpart that also have substantive FDIC regulations or related statements of policy, references to the relevant regulations or statements of policy are contained in the specific sections.

§ 303.241 Reduce or retire capital stock or capital debt instruments.

(a) *Scope.* This section contains the procedures to be followed by an insured state nonmember bank to seek the prior approval of the FDIC to reduce the amount or retire any part of its common or preferred stock, or to retire any part of its capital notes or debentures pursuant to section 18(i)(1) of the Act (12 U.S.C. 1828(i)(1)).

(b) *Where to file.* Applicants shall submit a letter application to the appropriate FDIC office.

(c) *Content of filing.* The application shall contain the following:

(1) The type and amount of the proposed change to the capital structure and the reason for the change;

(2) A schedule detailing the present and proposed capital structure;

(3) The time period that the proposal will encompass;

(4) If the proposal involves a series of transactions affecting Tier 1 capital components which will be consummated over a period of time which shall not exceed twelve months, the application shall certify that the insured depository institution will maintain itself as a well-capitalized institution as defined in part 325 of this chapter, both before and after each of the proposed transactions;

(5) If the proposal involves the repurchase of capital instruments, the amount of the repurchase price and the basis for establishing the fair market value of the repurchase price;

(6) A statement that the proposal will be available to all holders of a particular class of outstanding capital instruments on an equal basis, and if not, the details of any restrictions; and

(7) The date that the applicant's board of directors approved the proposal.

(d) *Additional information.* The FDIC may request additional information at any time during processing of the application.

(e) *Undercapitalized institutions.* Procedures regarding applications by an undercapitalized insured depository institution to retire capital stock or capital debt instruments pursuant to section 38 of the FDI Act (12 U.S.C. 1831*o*) are set forth in subpart K (Prompt Corrective Action), § 303.203. Applications pursuant to sections 38 and 18(i) may be filed concurrently, or as a single application.

(f) *Expedited processing for eligible depository institutions.* An application filed under this section by an eligible depository institution as defined in§ 303.2(r) will be acknowledged in writing by the FDIC and will receive expedited processing, unless the applicant is notified in writing to the contrary and provided with the basis for that decision. The FDIC may remove an application from expedited processing for any of the reasons set forth in § 303.11(c)(2). Absent such removal, an application processed under expedited processing will be deemed approved 20 days after the FDIC's receipt of a substantially complete application.

(g) *Standard processing.* For those applications that are not processed pursuant to expedited procedures, the FDIC will provide the applicant with written notification of the final action as soon as the decision is rendered.

§ 303.242 Exercise of trust powers.

(a) *Scope.* This section contains the procedures to be followed by a state nonmember bank to seek the FDIC's prior consent to exercise trust powers. The FDIC's prior consent to exercise trust powers is not required in the following circumstances:

(1) Where a state nonmember bank received authority to exercise trust powers from its chartering authority prior to December 1, 1950; or

(2) Where an insured depository institution continues to conduct trust activities pursuant to authority granted by its chartering authority subsequent to a charter conversion or withdrawal from membership in the Federal Reserve System.

(b) *Where to file.* Applicants shall submit to the appropriate FDIC office a completed form, ''Application for Consent To Exercise Trust Powers''. This form may be obtained from any FDIC regional director.

(c) *Content of filing.* The filing shall consist of the completed trust application form.

(d) *Additional information.* The FDIC may request additional information at any time during processing of the filing.

(e) *Expedited processing for eligible depository institutions.* An application filed under this section by an eligible depository institution as defined in § 303.2(r) will be acknowledged in writing by the FDIC and will receive expedited processing, unless the applicant is notified in writing to the contrary and provided with the basis for that decision. The FDIC may remove an application from expedited processing for any of the reasons set forth in § 303.11(c)(2). Absent such removal, an application processed under expedited procedures will be deemed approved 30 days after the FDIC's receipt of a substantially complete application.

(f) *Standard processing.* For those applications that are not processed pursuant to the expedited procedures, the FDIC will provide the applicant with written notification of the final action when the decision is rendered.

§ 303.243 Brokered deposit waivers.

(a) *Scope.* Pursuant to section 29 of the FDI Act (12 U.S.C. 1831f) and part 337 of this chapter, an adequately capitalized insured depository institution may not accept, renew or roll over any brokered deposits unless it has obtained a waiver from the FDIC. A well-capitalized insured depository institution may accept brokered deposits without a waiver, and an undercapitalized insured depository institution may not accept, renew or roll over any brokered deposits under any circumstances. This section contains the procedures to be followed to file with the FDIC for a brokered deposit waiver. The FDIC will provide notice to the depository institution's appropriate federal banking agency and any state regulatory agency, as appropriate, that a request for a waiver has been filed and will consult with such agency or agencies, prior to taking action on the institution's request for a waiver. Prior notice and/or consultation shall not be required in any particular case if the FDIC determines that the circumstances require it to take action without giving such notice and opportunity for consultation.

(b) *Where to file.* Applicants shall submit a letter application to the appropriate FDIC office.

(c) *Content of filing.* The application shall contain the following:

(1) The time period for which the waiver is requested;

(2) A statement of the policy governing the use of brokered deposits in the institution's overall funding and liquidity management program;

(3) The volume, rates and maturities of the brokered deposits held currently and anticipated during the waiver period sought, including any internal limits placed on the terms, solicitation and use of brokered deposits;

(4) How brokered deposits are costed and compared to other funding alternatives and how they are used in the institution's lending and investment activities, including a detailed discussion of asset growth plans;

(5) Procedures and practices used to solicit brokered deposits, including an identification of the principal sources of such deposits;

(6) Management systems overseeing the solicitation, acceptance and use of brokered deposits;

(7) A recent consolidated financial statement with balance sheet and income statements; and

(8) The reasons the institution believes its acceptance, renewal or rollover of brokered deposits would pose no undue risk.

(d) *Additional information.* The FDIC may request additional information at any time during processing of the application.

(e) *Expedited processing for eligible depository institutions.* An application filed under this section by an eligible depository institution as defined in this paragraph will be acknowledged in writing by the FDIC and will receive expedited processing, unless the applicant is notified in writing to the contrary and provided with the basis for that decision. For the purpose of this section, an applicant will be deemed an eligible depository institution if it satisfies all of the criteria contained in § 303.2(r) except that the applicant may be adequately capitalized rather than well-capitalized. The FDIC may remove an application from expedited processing for any of the reasons set forth in § 303.11(c)(2). Absent such removal, an application processed under expedited procedures will be deemed approved 21 days after the FDIC's receipt of a substantially complete application.

(f) *Standard processing.* For those filings which are not processed pursuant to the expedited procedures, the FDIC will provide the applicant with written notification of the final action as soon as the decision is rendered.

(g) *Conditions for approval.* A waiver issued pursuant to this section shall:

(1) Be for a fixed period, generally no longer than two years, but may be extended upon refiling; and

(2) May be revoked by the FDIC at any time by written notice to the institution.

§ 303.244 Golden parachute and severance plan payments.

(a) *Scope.* Pursuant to section 18(k) of the FDI Act (12 U.S.C. 1828(k)) and part 359 of this chapter, an insured depository institution or depository institution holding company may not make golden parachute payments or excess nondiscriminatory severance plan payments unless the depository institution or holding company obtains permission to make such payments in accordance with the rules contained in part 359 of this chapter. This section contains the procedures to file for the FDIC's consent when such consent is necessary under part 359 of this chapter.

(1) *Golden parachute payments.* A troubled insured depository institution or a troubled depository institution holding company is prohibited from making golden parachute payments (as defined in § 359.1(f)(1) of this chapter) unless it obtains the consent of the appropriate federal banking agency and the written concurrence of the FDIC. Therefore, in the case of golden parachute payments, the procedures in this section apply to all troubled insured depository institutions and troubled depository institution holding companies.

(2) *Excess nondiscriminatory severance plan payments.* In the case of excess nondiscriminatory severance plan payments as provided by § 359.1(f)(2)(v) of this chapter, the FDIC's consent is necessary for state nonmember banks that meet the criteria set forth in § 359.1(f)(1)(ii) of this chapter. In addition, the FDIC's consent is required for all insured depository institutions or depository institution holding companies that meet the same criteria and seek to make payments in excess of the 12-month amount specified in § 359.1(f)(2)(v).

(b) *Where to file.* Applicants shall submit a letter application to the appropriate FDIC regional director.

(c) *Content of filing.* The application shall contain the following:

(1) The reasons why the applicant seeks to make the payment;

(2) An identification of the institution-affiliated party who will receive the payment;

(3) A copy of any contract or agreement regarding the subject matter of the filing;

(4) The cost of the proposed payment and its impact on the institution's capital and earnings; and

(5) The reasons why consent to the payment should be granted.

(d) *Additional information.* The FDIC may request additional information at any time during processing of the filing.

(e) *Processing.* The FDIC will provide the applicant with a subsequent written notification of the final action taken as soon as the decision is rendered.

§ 303.245 Waiver of liability for commonly controlled depository institutions.

(a) *Scope.* Section 5(e) of the FDI Act (12 U.S.C. 1815(e)) creates liability for commonly controlled insured depository institutions for losses incurred or anticipated to be incurred by the FDIC in connection with the default of a commonly controlled insured depository institution or any assistance provided by the FDIC to any commonly controlled insured depository institution in danger of default. In addition to certain statutory exceptions and exclusions contained in sections 5(e)(6), (7) and (8), the FDI Act also permits the FDIC, in its discretion, to exempt any insured depository institution from this liability if it determines that such exemption is in the best interests of the Bank Insurance Fund (BIF) or the Savings Association Insurance Fund (SAIF). This section describes procedures to request a conditional waiver of liability pursuant to section 5 of the FDI Act (12 U.S.C. 1815(e)(5)(A)).

(b) *Definition.* Conditional waiver of liability means an exemption from liability pursuant to section 5(e) of the FDI Act (12 U.S.C. 1815(e)) subject to terms and conditions.

(c) *Where to file.* Applicants shall submit a letter application to the appropriate FDIC office.

(d) *Content of filing.* The application shall contain the following information:

(1) The basis for requesting a waiver;

(2) The existence of any significant events (e.g., change in control, capital injection, etc.) that may have an impact upon the applicant and/or any potentially liable institution;

(3) Current, and if applicable, pro forma financial information regarding the applicant and potentially liable institution(s); and

(4) The benefits to the appropriate FDIC insurance fund resulting from the waiver and any related events.

(e) *Additional information.* The FDIC may request additional information at any time during the processing of the filing.

(f) *Processing.* The FDIC will provide the applicant with written notification of the final action as soon as the decision is rendered.

(g) *Failure to comply with terms of conditional waiver.* In the event a conditional waiver of liability is issued, failure to comply with the terms specified therein may result in the termination of the conditional waiver of liability. The FDIC reserves the right to revoke the conditional waiver of liability after giving the applicant written notice of such revocation and a reasonable opportunity to be heard on the matter pursuant to § 303.10.

§ 303.246 Insurance fund conversions.

(a) *Scope.* This section contains the procedures to be followed by an insured depository institution to seek the FDIC's prior approval to engage in an insurance fund conversion that involves the transfer of deposits between the SAIF and the BIF. Optional conversion transactions, commonly referred to as Oakar transactions, pursuant to section 5(d)(3) of the FDI Act (12 U.S.C. 1815(d)(3)), which do not involve the transfer of deposits between the SAIF and the BIF, are governed by the procedures set forth in subpart D (Merger Transactions) of this part.

(b) *Where to file.* Applicants shall submit a letter application to the appropriate FDIC regional director. The filing shall be signed by representatives of each institution participating in the transaction. Insurance fund conversions which are proposed in conjunction with a merger application filed by a state nonmember bank pursuant to section 18(c) of the FDI Act (12 U.S.C. 1828(c)) should be included with that filing.

(c) *Content of filing.* The application shall include the following information:

(1) A description of the transaction;

(2) The amount of deposits involved in the conversion transaction;

(3) A pro forma balance sheet and income statement for each institution upon consummation of the transaction; and

(4) Certification by each party to the transaction that applicable entrance and exit fees will be paid pursuant to part 312 of this chapter.

(d) *Additional information.* The FDIC may request additional information at any time during processing of the filing.

(e) *Processing.* The FDIC will provide the applicant with written notification of the final action as soon as the decision is rendered.

§ 303.247 Conversion with diminution of capital.

(a) *Scope.* This section contains the procedures to be followed by an insured federal depository institution seeking the prior written consent of the FDIC pursuant to section 18(i)(2) of the FDI Act (12 U.S.C. 1828(i)(2)) to convert from an insured federal depository institution to an insured state nonmember bank (except a District bank) where the capital stock or surplus of the resulting bank will be less than the capital stock or surplus, respectively, of the converting institution at the time of the shareholders' meeting approving such conversion.

(b) *Where to file.* Applicants shall submit a letter application to the appropriate FDIC office.

(c) *Content of filing.* The application shall contain the following information:

(1) A description of the proposed transaction;

(2) A schedule detailing the present and proposed capital structure; and

(3) A copy of any documents submitted to the state chartering authority with respect to the charter conversion.

(d) *Additional information.* The FDIC may request additional information at any time during the processing.

(e) *Processing.* The FDIC will provide the applicant with written notification of the final action when the decision is rendered.

§ 303.248 Continue or resume status as an insured institution following termination under section 8 of the FDI Act.

(a) *Scope.* This section relates to an application by a depository institution whose insured status has been terminated under section 8 of the FDI Act (12 U.S.C. 1818) for permission to continue or resume its status as an insured depository institution. This section covers institutions whose deposit insurance continues in effect for any purpose or for any length of time under the terms of an FDIC order terminating deposit insurance, but does not cover operating non-insured depository institutions which were previously insured by the FDIC, or any non-insured, non-operating depository institution whose charter has not been surrendered or revoked.

(b) *Where to file.* Applicants shall submit a letter application to the appropriate FDIC office.

(c) *Content of filing.* The filing shall contain the following information:

(1) A complete statement of the action requested, all relevant facts, and the reason for such requested action; and

(2) A certified copy of the resolution of the depository institution's board of directors authorizing submission of the filing.

(d) *Additional information.* The FDIC may request additional information at any time during processing of the filing.

(e) *Processing.* The FDIC will provide the applicant with written notification of the final action as soon as the decision is rendered.

§ 303.249 Truth in Lending Act—Relief from reimbursement.

(a) *Scope.* This section applies to requests for relief from reimbursement pursuant to the Truth in Lending Act (15 U.S.C. 1601 *et seq.*) and Regulation Z (12 CFR part 226). Related delegations of authority are also set forth.

(b) *Procedures to be followed in filing initial requests for relief.* Requests for relief from reimbursement shall be filed with the appropriate FDIC office or within 60 days after receipt of the compliance report of examination containing the request to conduct a file search and make restitution to affected customers. The filing shall contain a complete and concise statement of the action requested, all relevant facts, the reasons and analysis relied upon as the basis for such requested action, and all supporting documentation.

(c) *Additional information.* The FDIC may request additional information at any time during processing of any such requests.

(d) *Processing.* The FDIC will acknowledge receipt of the request for reconsideration and provide the applicant with written notification of its determination within 60 days of its receipt of the request for reconsideration.

(e) *Procedures to be followed in filing requests for reconsideration.* Within 15 days of receipt of written notice that its request for relief has been denied, the requestor may petition the appropriate FDIC office for reconsideration of such request in accordance with the procedures set forth in § 303.11(f).

§ 303.250 Management official interlocks.

(a) *Scope.* This section contains the procedures to be followed by an insured state nonmember bank to seek the approval of FDIC to establish an interlock pursuant to the Depository Institutions Management Interlocks Act (12 U.S.C. 3207), section 13 of the FDI Act (12 U.S.C. 1823(k)) and part 348 of this chapter (12 CFR part 348).

(b) *Where to file.* Applicants shall submit a letter application to the appropriate FDIC office.

(c) *Content of filing.* The application shall contain the following:

(1) A description of the proposed interlock;

(2) A statement of reason as to why the interlock will not result in a monopoly or a substantial lessening of competition; and

(3) If the applicant is seeking an exemption set forth in § 348.5 or 348.6 of this chapter, a description of the particular exemption which is being requested and a statement of reasons as to why the exemption is applicable.

(d) *Additional information.* The FDIC may request additional information at any time during processing of the filing.

(e) *Processing.* The FDIC will provide the applicant with written notification of the final action when the decision is rendered.

§ 303.251 Modification of conditions.

(a) *Scope.* This section contains the procedures to be followed by an insured depository institution to seek the prior consent of the FDIC to modify the requirement of a prior approval of a filing issued by the FDIC.

(b) *Where to file.* Applicants should submit a letter application to the appropriate FDIC regional director.

(c) *Content of filing.* The application should contain the following information:

(1) A description of the original approved application;

(2) A description of the modification requested; and

(3) The reason for the request.

(d) *Additional information.* The FDIC may request additional information at any time during processing of the filing.

(e) *Processing.* The FDIC will provide the applicant with a written notification of the final action as soon as the decision is rendered.

§ 303.252 Extension of time.

(a) *Scope.* This section contains the procedures to be followed by an insured depository institution to seek the prior consent of the FDIC for additional time to fulfill a condition required in an approval of a filing issued by the FDIC or to consummate a transaction which was the subject of an approval by the FDIC.

(b) *Where to file.* Applicants shall submit a letter application to the appropriate FDIC office.

(c) *Content of filing.* The application shall contain the following information:

(1) A description of the original approved application;

(2) Identification of the original time limitation;

(3) The additional time period requested; and

(4) The reason for the request.

(d) *Additional information.* The FDIC may request additional information at any time during processing of the filing.

(e) *Processing.* The FDIC will provide the applicant with written notification of the final action as soon as the decision is rendered.

§§ 303.253–303.259 [Reserved]

By order of the Board of Directors.

Dated at Washington, DC, this 3rd day of December, 2002.

Federal Deposit Insurance Corporation.

Valerie J. Best,

Assistant Executive Secretary.

[FR Doc. 02–31922 Filed 12–26–02; 8:45 am]

BILLING CODE 6714–01–P

FEDERAL DEPOSIT INSURANCE CORPORATION

12 CFR Parts 303, 333, 347, 348, 359

RIN 3064–AC55

Filing Procedures, Corporate Powers, International Banking, Management Official Interlocks

AGENCY: Federal Deposit Insurance Corporation (FDIC).

ACTION: Notice of proposed rulemaking.

SUMMARY: The FDIC is proposing to amend its regulations governing filing procedures, international banking and management official interlocks by making technical corrections and modifications to clarify existing policies and procedures. In addition, the FDIC is proposing to add a waiver provision to its regulations.

As part of its regulatory review effort, the FDIC also solicits public comment to identify any areas of its filing procedures regulation that are outdated, unnecessary, or unduly burdensome, and whether the regulation should be continued without change, amended or rescinded to minimize any significant economic impact it may have on a substantial number of small insured institutions (*i.e.,* those with assets of $150 million or less).

DATES: Written comments must be received on or before February 25, 2003.

ADDRESSES: All comments should be addressed to Robert E. Feldman, Executive Secretary, Attention: Comments/ES, Federal Deposit Insurance Corporation, 550 17th Street, NW, Washington, DC, 20429. Comments may be hand delivered to the guard station at the rear of the 550 17th Street Building (located on F Street) on business days between 7 a.m. and 5 p.m.; or sent by e-mail to the following Internet address: *comments@fdic.gov.* Comments may be inspected and photocopied in the FDIC Public Information Center, Room 100, 801 17th Street, NW Washington, DC, 20429, between 9a.m. and 4:30 p.m. on business days, and the FDIC may post the comments on its Internet site at *http://www.fdic.gov/regulations/laws/federal/propose.html.*

FOR FURTHER INFORMATION CONTACT: Division of Supervision and Consumer Protection: Steven D. Fritts, Associate Director, (202) 898–3723, Mindy West, Examination Specialist, (202) 898–7221; Legal Division: Supervision and Legislation Branch, Robert C. Fick, Counsel, (202) 898–8962, Susan van den Toorn, Counsel, (202) 898–8707.

SUPPLEMENTARY INFORMATION:

I. Background

Part 303 of the FDIC's regulations (part 303) generally describes the procedures to be followed by both the FDIC and applicants with respect to applications and notices required to be filed by statute or regulation. Elsewhere in this issue of the **Federal Register** the Board has issued in final form a revised part 303 to reflect a recent internal reorganization at the FDIC and to remove the delegations of authority from the regulation. The changes being proposed in this document include revisions to Part 303 that require notice and comment pursuant to the Administrative Procedure Act and technical corrections to other regulations in chapter III.

II. Proposed Rule Part 303

The FDIC is proposing to amend § 303.2 to clarify how the statutory definitions in the FDI Act apply to part 303. Several provisions in part 303 utilize terms, such as ''bank,'' ''company'' and ''depository institution holding company,'' that are defined in the FDI Act. The FDIC proposes to clarify that unless such terms are expressly defined differently in part 303, those terms will have the meanings given them in the FDI Act. Therefore, the proposed § 303.2 specifies that wherever a term that is defined in the FDI Act is used in part 303, it will have the meaning given it in the FDI Act except to the extent part 303 expressly defines that term differently.

The FDIC is proposing to amend § 303.4—*Computation of time,* to clarify when the general rule regarding the commencement of the various time periods in part 303 applies. Several subparts of part 303 include a provision that specifies when a particular time period commences. See, for example, subpart E—Change in Bank Control. It is the FDIC's intention that in those instances where a specific provision exists, the specific provision prevails over the general rule set forth in § 303.4. The FDIC is proposing to modify the first sentence of § 303.4 to clarify that the general rule only applies to the extent there is no specific provision regarding when a particular time period commences.

The FDIC proposes to revise current § 303.11(g) to provide a time within which the FDIC has to respond to an institution or institution-affiliated party that files a response to a notice of intent or temporary order issued pursuant to this section. The FDIC believes that 30 days is a reasonable time in which to review any response submitted by an institution or institution-affiliated party. Additionally, the FDIC is proposing to place the last sentence of current § 303.11(g)(3)(ii) into a separate paragraph to clarify that it applies to § 303.11(g)(3) in its entirety, and not only to § 303.11(g)(3)(ii).

The FDIC is proposing to add a provision setting forth its authority to waive any non-statutorily required provision for good cause. Proposed § 303.12 would provide that the Board may, for good cause and to the extent permitted by statute, waive the applicability of any provision of chapter III. The provisions could be waived, in whole or in part, at any time by the Board when good cause is shown, subject to the provisions of the Administrative Procedure Act and the provisions of chapter III. Any provision of the rules may be waived by the Board on its own motion or on petition if good cause is shown.

The FDIC is proposing a revision to § 303.22(a)(1) that would clarify the rating required for a bank or thrift holding company to be eligible for expedited processing for a proposed institution seeking deposit insurance. The existing § 303.22(a)(1) rating for a thrift holding company of a ''2'' is inappropriate since the Office of Thrift Supervision has ratings of ''A'', ''S'' and ''U''. The proposal would provide that an eligible holding company would be defined as a bank or thrift holding company that has consolidated assets of at least $150 million or more; a BOPEC rating of at least ''2'' for bank holding companies or an above average or ''A'' rating for thrift holding companies; and at least 75 percent of its consolidated depository institution assets comprised of eligible depository institutions.

The FDIC is proposing to amend several sections in subpart E to clarify that the acquisition of control of a parent company of a state nonmember bank generally requires a change in control notice. Section 7(j)(18) of the FDI Act (12 U.S.C. 1817(j)(18)) indicates that the Change in Bank Control Act applies to acquisitions of control of companies that control insured depository institutions. It has long been the FDIC's interpretation that a change in control notice is required whenever any person acquires control of a company that controls, directly or indirectly, a state nonmember bank. Such control could be indirect in that the company exerts control of the bank through one or more intermediate companies of a multi-tiered organization. The proposed amendments merely clarify the regulations in this regard. Specifically, the FDIC proposes to add a definition of ''parent company'' to the definitions

listed in § 303.81; add a reference to parent company in the provisions requiring a change in control notice for a state nonmember bank in § 303.82; add to § 303.83(a) exemptions for acquisitions of the voting shares of bank holding companies, and for acquisitions of the voting shares of savings and loan holding companies, and add technical conforming amendments to various sections in 12 CFR 303.80 through 303.83.

It has also been the FDIC's practice not to require a change in control notice in those cases where either the Board of Governors of the Federal Reserve System or the Office of Thrift Supervision reviews a change in control notice for the proposed transaction. For example, where a person proposes to acquire control of a bank holding company that controls a state nonmember bank, and the Board of Governors of the Federal Reserve System reviews a change in control notice for the same transaction, the FDIC considers it an unnecessary duplication for the acquirer to also file a change in control notice with the FDIC. The proposed changes would codify the FDIC's practice in that regard.

The FDIC is also proposing amendments to clarify when an acquisition subject to the Change in Bank Control Act may be consummated. Section 7(j) of the FDI Act, 12 U.S.C. 1817(j), generally provides that any person acquiring control of an insured depository institution must give the appropriate federal banking agency sixty days prior written notice of such proposed transaction. The existing § 303.85 could be interpreted to permit consummation of the proposed transaction prior to the expiration of that 60-day period. Section 303.85(a) provides that the 60-day notice period ''shall commence on the date of receipt of a substantially complete notice,'' and further provides that the FDIC will notify the person submitting the notice of, ''the date the notice is accepted for processing.'' Section 303.85(b) suggests that the 60 day period starts upon ''submission to the regional director of a substantially complete notice.'' The use of this terminology in referring to the 60-day notice period could lead to confusion about when the 60-day notice period commences and about when an acquisition may be consummated. In order to eliminate the potential for misunderstandings regarding the time period available to the FDIC for considering a proposed change in bank control transaction, the FDIC proposes to amend 12 CFR 303.85 (a) and (b) to make clear that the 60-day notice period commences on the day after the date that the appropriate regional director accepts the notice as substantially complete.

In § 303.86 the FDIC proposes to provide a more descriptive heading for paragraph (c) by including the phrase, ''waiving publication, acting before close of public comment period'' and to amend paragraph (c) by substituting ''paragraphs (a) and (d)'' for ''this paragraph.''

A technical correction to § 303.244 creates a cross-reference to § 359.4(a)(4) of this chapter regarding golden parachutes and severance plan payments to make clear the responsibilities of an applicant seeking approval of filings. Specifically, insured depository institutions, depository institution holding companies or institution-affiliated parties making requests for such payments often overlook the requirement that a party submitting such an application demonstrate that it does not possess and is not aware of any information, evidence, documents or other materials which would indicate that there is a reasonable basis to believe, at the time such payment is made, that the institution-affiliated party who is to benefit from a golden parachute or severance plan engaged in any breach of fiduciary duty or other misconduct which would have a material adverse effect on the bank; is substantially responsible for the bank's insolvency; violated any law which would have a material effect on the bank; or violated certain federal criminal and currency-reporting laws. In addition, with regard to part 359 of this chapter, the FDIC proposes to revise the reference in § 359.1(f)(1)(ii)(C) to part 303 to read, ''303.101(c).''

III. Other Regulatory Changes

Technical corrections are being proposed to part 333.4—Conversions from mutual to stock, form to correct references to part 303 of this chapter. The old citations in § 333.4(a) and (c) would be replaced with: ''subpart I of part 303 of this chapter.''

A technical correction is being proposed to part 347—International Banking, § 347.108(f) to reference the correct citation with regard to procedures for applications and notices for obtaining FDIC approval to invest in foreign organizations. Procedures are set out in subpart J of part 303 of this chapter, not subpart D of part 347 as provided for in the current regulation.

A technical correction is also being proposed to part 348—Management Official Interlocks, § 348.2 regarding the definition of Management official to correct the cross-reference to part 303 of this chapter. The correct citation should be to 12 CFR 303.101(b).

IV. Request for Public Comment as Part EGRPRA and Regulatory Flexibility Act Regulatory Review

Consistent with our obligation pursuant to Section 2222 of the Economic Growth and Regulatory Paperwork Reduction Act of 1996 (EGRPRA, 12 U.S.C. 3311), the FDIC requests public comment to identify any areas of part 303, not merely those sections for which changes are being proposed today, that are outdated, unnecessary, or unduly burdensome. The FDIC also requests public comment on whether part 303 should be continued without change, amended or rescinded to minimize any significant economic impact it may have on a substantial number of small insured institutions (*i.e.,* those with assets of $150 million or less) consistent with our obligation pursuant to Section 610 of the Regulatory Flexibility Act (5 U.S.C. 601 *et seq.*).

V. Regulatory Flexibility Act Analysis

Pursuant to 5 U.S.C. 605(b) of the Regulatory Flexibility Act, 5 U.S.C. 601 *et seq.,* the FDIC hereby certifies that the proposed amendments set forth in this proposed rule will not, if promulgated through a final rule, have a significant economic impact on a substantial number of small entities. The proposed rule makes primarily technical changes to the existing rule.

The FDIC invites the public to comment on whether the proposed rule reduces regulatory burden and to provide the FDIC with suggested alternatives to those set forth in the proposed rule. The FDIC will carefully review all comments received prior to issuing the final regulation.

VI. Paperwork Reduction Act

This proposed rule does not create or modify any collection of information pursuant to the Paperwork Reduction Act (44 U.S.C. 3501 *et seq.*). Consequently, no information has been submitted to the Office of Management and Budget for review.

VII. Plain Language Requirement

Section 722 of the Gramm-Leach-Bliley Act of 1999 requires the federal banking agencies to use ''plain language'' in all proposed and final rules published after January 1, 2000. We invite your comments on how to make this proposal easier to understand. For example:

(1) Have we organized the material to suit your needs?

(2) Are the requirements in the rule clearly stated?

(3) Does the rule contain technical language or jargon that isn't clear?

(4) What else could we do to make the rule easier to understand?

VII. Assessment of Impact of Federal Regulation on Families

The FDIC has determined that the proposed rule will not affect family well-being within the meaning of section 654 of the Treasury and General Government Appropriations Act, 1999, enacted as part of the Omnibus Consolidated and Emergency Supplemental Appropriations Act, 1999 (Pub. L. 105–277, 112 Stat. 2681).

List of Subjects

12 CFR Part 303

Administrative practice and procedure, Banks, banking, Bank merger, Branching, Foreign investments, Golden parachute payments, Insured branches, Interstate branching, Reporting and recordkeeping requirements, Savings associations.

12 CFR Part 333

Banks, banking, Corporate powers.

12 CFR Part 347

Bank deposit insurance, Banks, Credit, Foreign banking, Foreign investments, Insured branches, Investments, Reporting and recordkeeping requirements, United States investments abroad.

12 CFR Part 348

Antitrust, Banks, banking, Holding companies, Reporting and recordkeeping requirements.

12 CFR Part 359

Bank deposit insurance, Banks, banking, Golden parachute payments, Indemnity payments.

For the reasons set out in the preamble, the FDIC hereby proposes to amend 12 CFR parts 303, 333, 347, 348 and 359.

PART 303—FILING PROCEDURES

1. The authority citation for part 303 continues to read as follows:

Authority: 12 U.S.C. 378, 1813, 1815, 1816, 1817, 1818, 1819, (Seventh and Tenth), 1820, 1823, 1828, 1828a, 1831a, 1831e, 1831o, 1831p–1, 1831w, 1835a, 3104, 3105, 3108, 3207, 15 U.S.C. 1601–1607, 6716.

§ 303.2 [Amended]

2. In § 303.2 remove the phrase, ''For purposes of this part,'' and add in its place the phrase, ''Except as modified or otherwise defined in this part, terms used in this part that are defined in the Federal Deposit Insurance Act (12 U.S.C. 1811 *et seq.*) have the meanings provided in the Federal Deposit Insurance Act. Additional definitions of terms used in this part are as follows:''.

§ 303.4 [Amended]

3. In § 303.4 after the phrase, ''For purposes of this part,'' add the words, ''and except as otherwise specifically provided,''.

§ 303.8 [Amended]

4. In § 303.8, in the last sentence of paragraph (a) remove ''§ 309.5(c)'' and add in its place ''§ 309.5(f)''.

5. In § 303.11, paragraph (g)(3)(ii) is revised to read as follows:

§ 303.11 Decisions.

* * * * *

(g) * * *

(3) * * *

(ii) (A) Any other relevant information, mitigating circumstance, documentation, or other evidence in support of the applicant's position. An applicant may also request a hearing under § 303.10.

(B) Failure by an applicant to file a written response with the FDIC to a notice of intent or a temporary order within the specified time period, shall constitute a waiver of the opportunity to respond and shall constitute consent to a final order under this paragraph (g). The FDIC shall consider any such response, if filed in a timely manner, within 30 days of receiving the response.

* * * * *

6. Section 303.12 is added to read as follows:

§ 303.12 Waivers.

(a) The Board of Directors of the FDIC (Board) may, for good cause and to the extent permitted by statute, waive the applicability of any provision of this chapter.

(b) The provisions of this chapter may be suspended, revoked, amended or waived for good cause shown, in whole or in part, at any time by the Board, subject to the provisions of the Administrative Procedure Act and the provisions of this chapter. Any provision of the rules may be waived by the Board on its own motion or on petition if good cause thereof is shown.

7. In § 303.22, paragraph (a)(1) is amended by adding a sentence at the end to read as follows:

§ 303.22 Processing.

(a) * * *

(1) * * * An eligible holding company is defined as a bank or thrift holding company that has consolidated assets of at least $150 million or more; a BOPEC rating of at least ''2'' for bank holding companies or an above average or ''A'' rating for thrift holding companies; and at least 75 percent of its consolidated depository institution assets comprised of eligible depository institutions.

* * * * *

8. Section 303.80 is revised to read as follows:

§ 303.80 Scope.

This subpart sets forth the procedures for submitting a notice to acquire control of an insured state nonmember bank or a parent company of an insured state nonmember bank pursuant to the Change in Bank Control Act of 1978, section 7(j) of the FDI Act (12 U.S.C. 1817(j)).

9. Section 303.81 is revised to read as follows:

§ 303.81 Definitions.

For purposes of this subpart:

Acquisition includes a purchase, assignment, transfer, pledge or other disposition of voting shares, or an increase in percentage ownership resulting from a redemption of voting shares of an insured state nonmember bank or a parent company.

Acting in concert means knowing participation in a joint activity or parallel action towards a common goal of acquiring control of an insured state nonmember bank or a parent company, whether or not pursuant to an express agreement.

Control means the power, directly or indirectly, to direct the management or policies of an insured bank or a parent company or to vote 25 percent or more of any class of voting shares of an insured bank or a parent company.

Parent Company means any company that controls, directly or indirectly, an insured state nonmember bank.

Person means an individual, corporation, partnership, trust, association, joint venture, pool, syndicate, sole proprietorship, unincorporated organization, and any other form of entity; and a voting trust, voting agreement, and any group of persons acting in concert. 10. Section 303.82 is amended by revising paragraphs (a), (b), (c) and (d) to read as follows:

§ 303.82 Transactions requiring prior notice.

(a) *Prior notice requirement.* Any person acting directly or indirectly, or through or in concert with one or more persons, shall give the FDIC 60 days prior written notice, as specified in § 303.84, before acquiring control of an

insured state nonmember bank or any parent company, unless the acquisition is exempt under § 303.83.

(b) *Acquisitions requiring prior notice*— (1) *Acquisition of control.* The acquisition of control, unless exempted, requires prior notice to the FDIC.

(2) *Rebuttable presumption of control.* The FDIC presumes that an acquisition of voting shares of an insured state nonmember bank or a parent company constitutes the acquisition of the power to direct the management or policies of an insured bank or a parent company requiring prior notice to the FDIC, if, immediately after the transaction, the acquiring person (or persons acting in concert) will own, control, or hold with power to vote 10 percent or more of any class of voting shares of the institution, and if:

(i) The institution has registered shares under section 12 of the Securities Exchange Act of 1934 (15 U.S.C. 78l); or

(ii) No other person will own, control or hold the power to vote a greater percentage of that class of voting shares immediately after the transaction. If two or more persons, not acting in concert, each propose to acquire simultaneously equal percentages of 10 percent or more of a class of voting shares of an insured state nonmember bank or a parent company, each such person shall file prior notice with the FDIC.

(c) *Acquisitions of loans in default.* The FDIC presumes an acquisition of a loan in default that is secured by voting shares of an insured state nonmember bank or a parent company to be an acquisition of the underlying shares for purposes of this section.

(d) *Other transactions.* Acquisitions other than those set forth in paragraph (b)(2) of this section resulting in a person's control of less than 25 percent of a class of voting shares of an insured state nonmember bank or a parent company are not deemed by the FDIC to constitute control for purposes of the Change in Bank Control Act (12 U.S.C. 1817j).

* * * * *

11. Section 303.83 is amended by revising paragraphs (a)(1) through (a)(2), (a)(6) and (a)(7), (b)(1) and (b)(2), and adding paragraph (a)(8) to read as follows:

§ 303.83 Transactions not requiring prior notice.

(a) * * *

(1) The acquisition of additional voting shares of an insured state nonmember bank or a parent company by a person who:

(i) Held the power to vote 25 percent or more of any class of voting shares of the institution continuously since the later of March 9, 1979, or the date that the institution commenced business as an insured state nonmember bank or a parent company; or

(ii) Is presumed, under § 303.82(b)(2), to have controlled the institution continuously since March 9, 1979, if the aggregate amount of voting shares held does not exceed 25 percent or more of any class of voting shares of the institution or, in other cases, where the FDIC determines that the person has controlled the institution continuously since March 9, 1979;

(2) The acquisition of additional shares of a class of voting shares of an insured state nonmember bank or a parent company by any person (or persons acting in concert) who has lawfully acquired and maintained control of the institution (for purposes of § 303.82) after complying with the procedures of the Change in Bank Control Act to acquire voting shares of the institution under this subpart;

* * * * *

(6) The receipt of voting shares of an insured state nonmember bank or a parent company through a pro rata stock dividend;

(7) The acquisition of voting shares in a foreign bank, which has an insured branch or branches in the United States. (This exemption does not extend to the reports and information required under paragraphs 9, 10, and 12 of the Change in Bank Control Act of 1978 (12 U.S.C. 1817(j)(9), (10), and (12)); and

(8) The acquisition of voting shares of a depository institution holding company that either the Board of Governors of the Federal Reserve System or the Office of Thrift Supervision reviews pursuant to the Change in Bank Control Act (12 U.S.C. 1817(j)).

(b) *Prior notice exemption.* (1) The following acquisitions of voting shares of an insured state nonmember bank or a parent company, which otherwise would require prior notice under this subpart, are not subject to the prior notice requirements if the acquiring person notifies the appropriate FDIC office within 90 calendar days after the acquisition and provides any relevant information requested by the FDIC:

(i) The acquisition of voting shares through inheritance;

(ii) The acquisition of voting shares as a bona fide gift; or

(iii) The acquisition of voting shares in satisfaction of a debt previously contracted in good faith, except that the acquirer of a defaulted loan secured by a controlling amount of a state nonmember bank's voting securities or a parent company's voting securities shall file a notice before the loan is acquired.

(2) The following acquisitions of voting shares of an insured state nonmember bank or a parent company, which otherwise would require prior notice under this subpart, are not subject to the prior notice requirements if the acquiring person notifies the appropriate FDIC office within 90 calendar days after receiving notice of the acquisition and provides any relevant information requested by the FDIC.

(i) A percentage increase in ownership of voting shares resulting from a redemption of voting shares by the issuing bank or a parent company; or

(ii) The sale of shares by any shareholder that is not within the control of a person resulting in that person becoming the largest shareholder.

* * * * *

12. Section 303.85 is amended by revising paragraphs (a) and (b)(1) to read as follows:

§ 303.85 Processing.

(a) *Acceptance of notice, additional information.* The FDIC shall notify the person or persons submitting a notice under this subpart in writing of the date the notice is accepted as substantially complete. The FDIC may request additional information at any time.

(b) *Commencement of the 60-day notice period: consummation of acquisition.* (1) The 60-day notice period specified in § 303.82 shall commence on the day after the date of acceptance of a substantially complete notice by the appropriate regional director. The notificant(s) may consummate the proposed acquisition after the expiration of the 60-day notice period, unless the FDIC disapproves the proposed acquisition or extends the notice period.

* * * * *

13. Section 303.86 is amended by revising paragraph (c) to read as follows:

§ 303.86 Public notice requirements.

* * * * *

(c) *Shortening or waiving pubic comment period, waiving publication; acting before close of public comment period.* The FDIC may shorten the public comment period to a period of not less than 10 days, or waive the public comment or newspaper publication requirements of paragraph (a) of this section, or act on a notice before the expiration of a public comment period, if it determines in writing either that an emergency exists or that disclosure of the notice, solicitation of public comment, or delay until expiration of the public comment

period would seriously threaten the safety and soundness of the bank to be acquired.

* * * * *

14. In § 303.244, paragraphs (c)(4) and (c)(5) are revised and new paragraph (c)(6) is added to read as follows:

§ 303.244 Golden parachute and severance plan payments.

* * * * *

(c) * * *

(4) The cost of the proposed payment and its impact on the institution's capital and earnings;

(5) The reasons why the consent to the payment should be granted; and

(6) Certification and documentation as to each of the points cited in § 359.4(a)(4).

* * * * *

PART 333—EXTENSION OF CORPORATE POWERS

15. The authority citation for part 333 continues to read as follows:

Authority: 12 U.S.C. 1816, 1818, 1819 (''Seventh'', ''Eighth'' and ''Tenth''), 1828, 1828(m), 1831p–1(c).

§ 333. 4 [Amended]

16. In § 333.4, paragraphs (a) and (c) are amended by removing the words ''§ 303.15 of this chapter'' and adding in their place the words ''subpart I of part 303 of this chapter.''

PART 347—INTERNATIONAL BANKING

17. The authority citation for part 347 continues to read as follows:

Authority: 12 U.S.C. 1813, 1815, 1817, 1819, 1820, 1828, 3103, 3104, 3105, 3108: Title IX, Pub. L. 98–181, 97 Stat. 1153.

18. Section 347.108 is amended by revising paragraph (f) to read as follows:

§ 347.108 Obtaining FDIC approval to invest in foreign organizations.

* * * * *

(f) *Procedures.* Procedures for applications and notices under this section are set out in subpart J of part 303 of this chapter.

PART 348—MANAGEMENT OFFICIAL INTERLOCKS

19. The authority citation for part 348 continues to read as follows:

Authority: 12 U.S.C. 1823(k), 3207.

20. In § 348.2, paragraph (j)(1)(iii) is revised to read as follows:

§ 348.2 Definitions.

* * * * *

(j) * * *

(1) * * *

(iii) A senior executive officer as that term is defined in 12 CFR 303.101(b).

* * * * *

PART 359—GOLDEN PARACHUTE AND INDEMNIFICATION PAYMENTS

21. The authority citation for part 359 continues to read as follows:

Authority: 12 U.S.C. 1828(k).

§ 359.1 [Amended]

22. In § 359.1(f)(1)(ii)(C) remove the reference to ''§ 303.14(a)(4)'' and add in its place, ''§ 303.101(c)''.

Dated at Washington, DC, this 3rd day of December, 2002.

By order of the Board of Directors.

Federal Deposit Insurance Corporation.

Valerie Best,

Assistant Executive Secretary.

[FR Doc. 02–31921 Filed 12–26–02; 8:45 am]

BILLING CODE 6714–01–P

FEDERAL DEPOSIT INSURANCE CORPORATION

Applications for Deposit Insurance

AGENCY: Federal Deposit Insurance Corporation (FDIC).

ACTION: Final agency policy statement; amendment.

SUMMARY: The FDIC is amending its Statement of Policy on Applications for Deposit Insurance to reflect changes resulting from an internal reorganization. The reorganization merged the Division of Supervision and the Division of Compliance and Consumer Affairs. Additional changes were made to reflect recent statutory requirements. The amended statement of policy is intended to be read in conjunction with the deposit insurance provisions of the FDIC's revised regulations governing applications filed with the FDIC, which appears elsewhere in this issue of the **Federal Register.**

EFFECTIVE DATE: December 27, 2002.

FOR FURTHER INFORMATION CONTACT: Division of Supervision and Consumer Protection: Mindy West, Examination Specialist, (202/898–7221); or Legal Division: Supervision and Legislation Branch, Robert C. Fick, Counsel, Legal Division, (202/898–8962), FDIC, 550 17th Street, NW, Washington, DC, 20429.

SUPPLEMENTARY INFORMATION: On June 30, 2002, the FDIC implemented an internal reorganization. See: 67 FR 44351, July 2, 2002. The primary purpose of the reorganization was to streamline the management and decision making process. As part of the reorganization, several divisions were merged. In particular, the Division of Supervision was merged with the Division of Compliance and Consumer Affairs to create the Division of Supervision and Consumer Protection. The reorganization has necessitated changes to the Statement of Policy on Applications for Deposit Insurance (Statement of Policy) to reflect the new structure, since there are references to the former divisions and management structure in the prior Statement of Policy.

In conjunction with the revisions to the Statement of Policy, the FDIC is also amending 12 CFR part 303 (part 303) of the FDIC's regulations governing application, notice and request procedures. The amendments to part 303 reflect the FDIC's new organizational structure. The FDIC is also removing and updating the delegations of authority previously found in part 303 to provide greater flexibility and efficiency when making decisions throughout the application process. As a result of these changes, the amended Statement of Policy is intended to be read in conjunction with the revised deposit insurance provisions of newly-amended part 303, notice of which is published elsewhere in this issue of the **Federal Register**.

Section 307(c) of the Gramm-Leach-Bliley Act (GLBA) requires the FDIC to consult with the appropriate state insurance regulator before making any determination relating to the initial affiliation of, or the continuing affiliation of, a depository institution with a company engaged in insurance activities. On December 12, 2001, the Office of the Comptroller of the Currency, the FDIC and the Office of Thrift Supervision published a final notice in the **Federal Register** (66 FR 64341) revising the Interagency Charter and Federal Deposit Insurance Application (Application) to, in part, add an item to the form to collect information required by GLBA. The FDIC is now amending the Statement of Policy to conform to the recently updated Application to include the specified information required therein. The information that is required is the name of the affiliated insurance company, a description of its insurance activities, a list of each state and the lines of business in that state in which the company holds, or will hold, an insurance license. The applicant must also indicate the state where the company holds a resident license or charter, as applicable.

The Statement of Policy published August 20, 1998 (63 FR 44756) is hereby amended as follows:

FDIC Statement of Policy on Applications for Deposit Insurance

* * * * *

Procedures

Forms and instructions for applying for deposit insurance may be obtained from any FDIC regional director. Completed applications should be filed with the appropriate FDIC office. Organizers and incorporators (collectively, ''incorporators'') of proposed new depository institutions should file their applications with the FDIC and the appropriate chartering authority at the same time. Information provided to the chartering authority that is also needed as part of the deposit insurance application may be provided to the FDIC by appending a copy of the information to the FDIC application. Use of the FDIC application form is optional; however, the material submitted to the FDIC must contain all information requested in the FDIC application form, unless the FDIC otherwise indicates. In addition, all incorporators must sign and submit the signature page of the FDIC's deposit insurance application form, even if the application itself is not being used. It is strongly recommended that a representative(s) of the organizing group meet with the chartering authority and the FDIC prior to filing an application to reach an understanding of the information requirements of each agency. This practice typically facilitates processing and eliminates unnecessary delays. Information requirements may not be as extensive for applications sponsored by existing holding companies or other well-established banking groups. The FDIC may take final action prior to final action by other regulatory authorities in cases in which the FDIC has determined that there is no material disagreement on the action to be taken.

* * * * *

Section 307(c) of the Gramm-Leach-Bliley Act (GLBA) requires the FDIC to consult with the appropriate State insurance regulator before making any determination relating to the initial affiliation of, or the continuing affiliation of, a depository institution with a company engaged in insurance activities. As a result of this requirement, applicants that are, or will be, affiliated with a company engaged in insurance activities that is subject to supervision by a state insurance regulator must submit the following information as part of its application: (1) The name of the insurance company; (2) a description of the insurance activities that the company is engaged in and has plans to conduct; and (3) a list of each state and the lines of business in that state which the company holds, or will hold, an insurance license. Applicants must also indicate the state where the company holds a resident license or charter, as applicable.

Proposed Depository Institutions

* * * * *

Where the proposed depository institution will be a subsidiary of an existing bank or thrift holding company, the FDIC will consider the financial and managerial resources of the parent organization in assessing the overall proposal and in evaluating the statutory factors prescribed in section 6 of the Act. In such circumstances, the application for deposit insurance should contain a copy of any information submitted to the holding company's primary federal regulator. Subpart B of part 303 of the FDIC's regulations (12

CFR 303.20–.25) discusses certain expedited procedures that may be available to eligible depository institutions or eligible holding companies (as those terms are defined in the regulation).

The FDIC may conduct examinations and/or investigations to develop essential information with respect to deposit insurance applications. The FDIC will determine the need to conduct an investigation and its scope. Every effort will be made to coordinate any FDIC investigation with any investigations conducted by other regulators.

* * * * *

Statutory Factors

* * * * *

2. Adequacy of the Capital Structure

* * * * *

(b) *Wholly owned subsidiary of a holding company*—If the applicant is being established as a wholly owned subsidiary of an eligible holding company (as defined in part 303, subpart B), the FDIC will consider the financial resources of the parent organization as a factor in assessing the adequacy of the proposed initial capital injection. In such cases, the FDIC may find favorably with respect to the adequacy of capital factor, when the initial capital injection is sufficient to provide for a Tier 1 leverage capital ratio of at least 8% at the end of the first year of operation, based on a realistic business plan, or the initial capital injection meets the $2 million minimum capital standard set forth in this Statement of Policy, or any minimum standards established by the chartering authority, whichever is greater. The holding company shall also provide a written commitment to maintain the proposed institution's Tier 1 leverage capital ratio at no less than 8 % throughout the first three years of operation.

(c) *Operating insured offices*—If the proposal involves the acquisition of an insured operating office or offices, the applicant may request that the benchmark for evaluating the adequacy of capital be an amount necessary for the newly chartered institution to be classified as well capitalized, as defined by its primary federal regulator. In such cases, the FDIC may find favorably with respect to the capital factor based on a favorable finding with respect to the following:

* * * * *

4. General Character and Fitness of the Management

* * * * *

All proposed depository institutions shall provide at least a five member board of directors. The identity and qualifications of the proposed full-time chief executive officer should be made known to the FDIC as soon as possible, preferably when the application is filed with the appropriate FDIC office. Prior to the opening of the institution, proponents must advise the FDIC in writing of any change in the directorate, senior active management, or a change in the ownership of stock which would result in a shareholder owning 10% or more of the total shares of either the depository institution or its holding company.

* * * * *

(b) *Stock benefit plans*—Stock benefit plans, including stock options, stock warrants, and other similar stock based compensation plans will be reviewed by the FDIC and must be fully disclosed to all potential subscribers. Participants in stock benefit plans may include incorporators, directors, and officers. A description of any such plans proposed must be included in the application submitted to the appropriate FDIC office. The structure of stock benefit plans should encourage the continued involvement of the participants and serve as an incentive for the successful operation of the institution. Stock benefit plans should contain no feature that would encourage speculative or high risk activities or serve as an obstacle to or otherwise impede the sale of additional stock to the general public.

* * * * *

(c) *Background and biographical information*—Proposed directors, officers, and 10% shareholders must file financial and biographical information in connection with the deposit insurance application. The FDIC may request a report from the Federal Bureau of Investigation or other investigatory agencies on these individuals. Fingerprinting of individuals may be required. Background checks and fingerprinting may be waived by the FDIC for individuals who are currently associated with, or have had a recent past association with, an insured depository institution. When the proposed depository institution is being established as a wholly owned subsidiary of an eligible holding company, the FDIC may waive financial information for those persons who are being proposed as directors or officers of the applicant. Background checks conducted by other federal financial institution regulators in connection with charter applications are generally adequate for the FDIC if the other regulators agree to notify the FDIC of instances in which further investigation is warranted.

In the event any present or prospective director, officer, employee, controlling stockholder, or agent of the applicant has been convicted of any criminal offense involving dishonesty, breach of trust, or money laundering, or has agreed to enter into a pretrial diversion or similar program in connection with a prosecution of such offense, the applicant must obtain the FDIC's written consent under section 19 of the Act (12 U.S.C. 1829), before any such person may serve in one or more of those capacities. Guidelines regarding section 19 applications may be obtained from the appropriate FDIC office.

* * * * *

5. Risk Presented to the Bank Insurance Fund or Savings Association Insurance Fund

In order to resolve this factor favorably, the FDIC must be assured that the proposed institution does not present an undue risk to the Bank Insurance Fund or the Savings Association Insurance Fund. As a general matter, the FDIC interprets this factor very broadly. In making its determination, the FDIC will rely on any information available to it, including, but not limited to the applicant's business plan. The FDIC expects that an applicant will submit a business plan commensurate with the capabilities of its management and the financial commitment of the incorporators. Any significant deviation from the business plan within the first three years of operation must be reported by the insured depository institution to the primary federal regulator before consummation of the change. Submission of an unsound business plan will unfavorably impact the finding concerning this factor. An applicant's business plan should demonstrate the following:

* * * * *

Proposed Depository Institutions Formed for the Sole Purpose of Acquiring Assets and Assuming Liabilities of an Insured Institution in Default

Proponents should contact the appropriate FDIC office as soon as possible if they are interested in acquiring assets and/or assuming liabilities of an institution in default. Due to the time constraints involved with this type of transaction, information submissions and applications will be abbreviated. Generally, a letter request accompanied by copies of applications filed with

other federal or state regulatory authorities will be sufficient. Other information will be requested only as needed by the FDIC.

By order of the Board of Directors.

Dated at Washington, DC, this 3rd day of December, 2002.

Federal Deposit Insurance Corporation.

Valerie J. Best,

Assistant Executive Secretary.

[FR Doc. 02–31920 Filed 12–26–02; 8:45 am]

BILLING CODE 6714–01–P

FEDERAL DEPOSIT INSURANCE CORPORATION

FDIC Statement of Policy on Bank Merger Transactions

AGENCY: Federal Deposit Insurance Corporation (FDIC).

ACTION: Final agency policy statement; amendment.

SUMMARY: The FDIC is amending its Statement of Policy on Bank Merger Transactions to reflect changes made pursuant to an internal reorganization. The reorganization merged the Division of Supervision and the Division of Compliance and Consumer Affairs. The amended Statement of Policy is intended to be read in conjunction with the merger provisions of the FDIC's revised regulations governing applications filed with the FDIC, which appears elsewhere in this issue of the **Federal Register**.

EFFECTIVE DATE: December 27, 2002.

FOR FURTHER INFORMATION CONTACT: Mindy West, Examination Specialist, Division of Supervision and Consumer Protection, (202/898–7221); Robert C. Fick, Counsel, Legal Division, (202/898–8962), FDIC, Washington, DC 20429.

SUPPLEMENTARY INFORMATION: On June 30, 2002, the FDIC implemented an internal reorganization. The primary purpose of the reorganization was to streamline the management and decision making processes. As part of the reorganization, several divisions were merged. In particular, the Division of Supervision was merged with the Division of Compliance and Consumer Affairs to create the Division of Supervision and Consumer Protection. The reorganization has necessitated changes to the Statement of Policy on Bank Merger Transactions (Statement of Policy), to reflect the new structure since there are references to the former divisions and management structure in the prior Statement of Policy.

In conjunction with the revisions to the Statement of Policy, the FDIC is also amending 12 CFR part 303 (part 303) of the FDIC's regulations governing application, notice, and request procedures. The amendments to part 303 reflect the FDIC's new organizational structure. The FDIC is also removing and updating the delegations of authority previously found in part 303 to provide greater flexibility when making decisions throughout the application process. As a result of these changes, the revised Statement of Policy is intended to be read in conjunction with the revised merger provisions of newly-amended part 303, notice of which is published in this issue of the **Federal Register**.

Section 307(c) of the Gramm-Leach-Bliley Act (GLBA) requires the FDIC to consult with the appropriate state insurance regulator before making any determination relating to the initial affiliation of, or the continuing affiliation of, a depository institution with a company engaged in insurance activities. On April 29, 2002, the Office of the Comptroller of the Currency, Board of Governors of the Federal Reserve System, FDIC and the Office of Thrift Supervision published a final notice in the Federal Register (67 FR 21014) revising the Interagency Bank Merger Act Application (Application) to add an item to the form to collect information required by GLBA. The FDIC is now amending the Statement of Policy to conform to the recently updated Application to include the specified information required therein. The information that is required is the name of the affiliated insurance company, a description of its insurance activities, a list of each state and the lines of business in that state in which the company holds, or will hold, an insurance license. The applicant must also indicate the state where the company holds a resident license or charter, as applicable.

The Statement of Policy published December 1, 1998 (63 FR 66184) is hereby amended as follows:

FDIC Statement of Policy on Bank Merger Transactions

* * * * *

II. Application Procedures

1. *Application filing.* Application forms and instructions may be obtained from the appropriate FDIC office. Completed applications and any other pertinent materials should be filed with the appropriate FDIC office. The application and related materials will be reviewed by the FDIC for compliance with applicable laws and FDIC rules and regulations. When all necessary information has been received, the application will be processed and a decision rendered by the FDIC.

* * * * *

3. *Publication of notice.* The FDIC will not take final action on a merger application until notice of the proposed merger transaction is published in a newspaper or newspapers of general circulation in accordance with the requirements of section 18(c)(3) of the Federal Deposit Insurance Act. See § 303.65 of the FDIC rules and regulations (12 CFR 303.65). The applicant must furnish evidence of publication of the notice to the appropriate FDIC office following compliance with the publication requirement. See § 303.7(b) of the FDIC rules and regulations (12 CFR 303.7(b)).

* * * * *

6. *Merger decisions available.* Applicants for consent to engage in a merger transaction may find additional guidance in the reported bases for FDIC approval or denial in prior merger transaction cases compiled in the FDIC's annual ''Merger Decisions'' report. Reports may be obtained from the FDIC Public Information Center, Room 100, 801 17th Street NW., Washington, DC 20434. Reports may also be viewed at *http://www.fdic.gov.*

* * * * *

III. Evaluation of Merger Applications

* * * * *

Special Information requirement if applicant is affiliated with or will be affiliated with an insurance company.

If the institution that is the subject of the application is, or will be, affiliated with a company engaged in insurance activities that is subject to supervision by a state insurance regulator, the applicant must submit the following information as part of its application: (1) The name of insurance company; (2) a description of the insurance activities that the company is engaged in and has plans to conduct; and (3) a list of each state and the lines of business in that state which the company holds, or will hold, an insurance license. Applicant must also indicate the state where the company holds a resident license or charter, as applicable.

By order of the Board of Directors.

Dated at Washington, DC, this 3rd day of December, 2002.

Federal Deposit Insurance Corporation.

Valerie J. Best,

Assistant Executive Secretary.

[FR Doc. 02–31919 Filed 12–26–02; 8:45 am]

BILLING CODE 6714–01–P

Federal Register

Friday,
December 27, 2002

Part III

Department of Labor

Office of Labor-Management Standards

29 CFR Parts 403 and 408
Labor Organization Annual Financial Reports; Proposed Rule

DEPARTMENT OF LABOR

Office of Labor-Management Standards

29 CFR Parts 403 and 408

RIN 1215–AB34

Labor Organization Annual Financial Reports

AGENCY: Office of Labor-Management Standards, Employment Standards Administration, Department of Labor.

ACTION: Notice of proposed rulemaking; request for comments.

SUMMARY: The Department of Labor's Employment Standards Administration (ESA) is proposing to revise forms LM–2, LM–3, and LM–4, which are used by labor organizations to file the annual financial reports required under title II of the Labor-Management Reporting and Disclosure Act of 1959, as amended (LMRDA or Act) with ESA's Office of Labor-Management Standards (OLMS). The purpose of this reform is to improve the transparency and accountability of labor organizations to their members, the public, and the government; to increase the information available to members of labor organizations; and to make the data disclosed in such reports more understandable and accessible. The Department invites comment on this proposed rule and the revised forms, as well as on the instructions for filling out the forms.

Some of the reforms proposed include requiring form LM–2 filers to file reports electronically (unless the labor organization claims a temporary hardship exemption or applies for and is granted a continuing hardship exemption), to identify ''major'' receipts and disbursements, and to allocate disbursements among several categories provided on the form. The proposal would also require all covered labor organizations to report the assets, liabilities, receipts, and disbursements of organizations with annual receipts of $200,000 or more that meet the statutory definition of a ''trust in which a labor organization is interested'' in order to ensure meaningful disclosure to union members and prevent the circumvention of the reporting requirements of title II. Finally, the proposal would make conforming changes, as described below, to the other labor organization annual financial reporting forms, form LM–3 and form LM–4, which are affected in limited ways. The Department invites comments with respect to the benefits of these changes, the ease or difficulty with which labor organizations will be able to comply, and whether the information that would be provided to union members, the public, and the government if these changes were implemented would be meaningful, useful, and in accordance with the purposes of the Act.

DATES: Comments must be received on or before February 25, 2003.

ADDRESSES: Comments should be sent to Victoria A. Lipnic, Assistant Secretary for Employment Standards, U.S. Department of Labor, 200 Constitution Avenue, NW., Room N–5605, Washington, DC 20210.

All commenters are advised that U.S. mail delivery in the Washington, DC area has been slow and erratic due to the ongoing concerns involving anthrax contamination. All commenters must take this into consideration when preparing to meet the deadline for submitting comments. As a convenience to commenters, comments may be transmitted by e-mail to *FormLM2-comments@dol-esa.gov* or by facsimile (FAX) machine to (202) 693–1340. To assure access to the FAX equipment, only comments of five or fewer pages will be accepted via FAX transmittal, unless arrangements are made prior to faxing, by calling the number below and scheduling a time for fax receipt by OLMS.

It is recommended that you confirm receipt of your comment by contacting (202) 693–0122 (this is not a toll-free number). Individuals with hearing impairments may call 1–800–877–8339 (TTY/TDD).

Comments will be available for public inspection during normal business hours at the above address.

FOR FURTHER INFORMATION CONTACT: Victoria A. Lipnic, Assistant Secretary for Employment Standards, U.S. Department of Labor, 200 Constitution Avenue, NW., Room S–2321, Washington, DC 20210, *olms-mail@dol-esa.gov,* (202) 693–0122 (this is not a toll-free number). Individuals with hearing impairments may call 1–800–877–8339 (TTY/TDD).

SUPPLEMENTARY INFORMATION:

I. Background

Over the course of the last century, there have been tremendous changes in the American workplace. Not only has the size of the American workforce increased dramatically—roughly six-fold—but the ''composition of the labor force shifted from industries dominated by primary production occupations, such as farmers and foresters, to those dominated by professional, technical, and service workers.'' Report on the American Workforce, U.S. Department of Labor, 2001, p. 3. The way in which American workers are compensated has also changed considerably. In 1966, over 80% of total compensation consisted of wages and salaries, with less than 20% representing benefits. By 2000, wages dropped to 73% of total compensation and benefits grew to 27% of the compensation package. *Id.* at p. 76, 87. Today's workforce—which is better educated, more empowered, and more familiar with financial data and transactions than ever before—expects relevant and useful information in order to make fundamental career decisions, evaluate options and exercise legally guaranteed rights. American workers rightly expect to receive such information not only from their government and their employers, but also from labor organizations that represent them or seek to represent them in the workplace.

Labor organizations also have changed tremendously since the enactment of the LMRDA in 1959. There are now far fewer small, independent unions and more large unions affiliated with a national or international body. In 2000, 5,426 unions, including 141 national and international unions, reported $200,000 or more in total annual receipts—the threshold at which a labor organization must use form LM–2 to file the annual financial report required by the LMRDA. In fact, many large unions today resemble modern corporations in their structure, scope and complexity. A large number of them manage full-featured benefit plans for their members, maintain close business relationships with financial service providers such as insurance companies and investment firms, offer multiple compensation opportunities to their senior executives and officials, operate revenue-producing subsidiaries, conduct extensive government lobbying, and participate in foundations and charitable activities.

As labor organizations have become more multifaceted and have created hybrid structures for their various activities, the form used to report financial information with respect to these activities, which has remained significantly unchanged, has become a barrier to the full and transparent reporting intended by the Act. Moreover, just as in the corporate sector, there have been a number of financial failures and irregularities involving pension funds and other member accounts maintained by labor organizations. These failures and irregularities result in direct financial harm to union members. If the members of labor organizations had more complete, understandable information about their unions' financial

transactions, investments and solvency, they would be in a much better position than they are today to protect their personal financial interests and exercise their democratic rights of self-governance.

In light of the changes in the American workplace, the availability of technical improvements, and the increasing complexity of many union financial activities reported under the LMRDA, the Department believes that reasonable changes must be made to the forms required under title II, and the means by which they are filed. First, the most efficient way to provide meaningful access to this information by interested members of the public is to require that the reports filed by the largest labor organizations be filed in electronic form. In response to requests from union members, the media, members of Congress, and other interested parties for Internet access to reports filed by unions under the LMRDA, OLMS has recently inaugurated a new website (*http://www.union-reports.dol.gov*) where individuals may now view union annual financial reports and conduct data searches, displaying the results in a number of preformatted listings, free of charge. In order to provide this access, however, OLMS currently must scan each report that is filed in paper format—a process that is expensive and time-consuming. Requiring form LM–2 reports to be filed electronically using software provided by OLMS, and making them available on the website, will decrease the number of requests for reports that must be handled manually, freeing OLMS staff for other compliance assistance and enforcement work. Finally, requiring electronic filing of form LM–2 reports will provide OLMS with data that can be used more effectively for enforcement and compliance assistance purposes.

In addition, the Department is proposing a number of changes in the form LM–2 itself, including a requirement that disbursements and receipts not otherwise identified be reported in specific categories that provide union members with more detailed information about the activities of their unions. The proposed revision of form LM–2 will provide union members and the public with information about the identity of individuals and entities who receive major disbursements of union funds and from whom unions receive major receipts not otherwise identified. This change is necessary to ensure that the information required is reported in such a way as to meet the objectives of the statute by providing union members with useful data that will enable them to be responsible and effective participants in the democratic governance of their unions. While it is recognized that changes in the form LM–2 may impose some burden on the largest unions, the burden of the proposed changes will dramatically diminish after the first year and the use of electronic filing proposed by this rulemaking will alleviate much of the burden on filers.

The Department considered raising the threshold at which unions are required to file form LM–2 as a way of limiting the burden of requiring electronic filing in greater detail. The threshold was raised to its current level of $200,000 in 1994. Adjusting for inflation, that amount would be approximately $245,000 today. Raising the threshold to $250,000 in annual receipts would relieve 654 unions, with combined receipts of approximately $150,000,000 per year, of the obligation to use the proposed form LM–2. Taking such action, however, would impact the amount of information available to more than 950,000 members. Since it is unclear whether such action would substantially affect the burden imposed without compromising the objective of increasing transparency, it was decided to specifically request comments on whether the current $200,000 threshold for form LM–2 filers should be raised to $250,000 or some other amount, or, instead, whether it should be left unchanged.

The LMRDA is effective only if union members and the government are given the information they need to determine how members' dues are being spent. As Representative Robert P. Griffin, a cosponsor of the bill, stated,

> * * * the effectiveness of the Act will surely depend upon the Secretary of Labor, who bears a great responsibility for its enforcement. However, in a larger sense, the effectiveness of the Act will depend also upon the rank-and-file union members themselves. For in the last analysis, it is they who must make the law meaningful by taking hold of the tools of democracy and using them to clean corruption out of their unions and to keep them clean.

Robert P. Griffin, Symposium on the Labor-Management Reporting and Disclosure Act of 1959, edited by Ralph Slovenko, Baton Rouge, Claitor's Bookstore Publishers, Tulane University School of Law, 1961, pp. 30–31. The LMRDA was passed with wide bipartisan support, and placed responsibility for enforcing its provisions jointly on the Department of Labor and rank-and-file union members. AFL–CIO President George Meany offered his support for the Act, stating ''if the powers conferred [in the LMRDA] are vigorously and properly used, the reporting requirements will make a major contribution towards the elimination of corruption and questionable practices.'' George Meany, Testimony before the House Labor Committee, June 1959. In light of the changes discussed above, the purposes of the Act could be better accomplished if the information that the statute requires labor organizations to report was provided in a more useful format and ''in such detail'' as necessary to provide union members with a more accurate picture of their union's ''financial condition and operations.'' 29 U.S.C. 431(b).

The Department developed reporting forms to complement its enforcement responsibilities shortly after the enactment of the LMRDA, but those forms have remained substantially unchanged for four decades, and simply have not kept pace with changes in financial practices and with the growth in size of unions and their financial transactions. Major changes were attempted in 1992. 57 FR 49282 (October 30, 1992). Pursuant to that rule, unions were required to report total disbursements in eight categories and then to allocate those disbursements among six ''functional'' categories. The Department, however, rescinded this rule on December 21, 1993. 58 FR 67594.

Since 1993, significant improvements in the software available to facilitate accounting make it possible to make a new attempt to change the form LM–2 in ways that will provide additional useful information to union members and the public without unduly burdening reporting unions. Accordingly, in the process of making changes to take advantage of advances in electronic recordkeeping, filing and disclosure technology, it is appropriate to consider changes that will enable union members to obtain more accurate information about the financial operations of their unions. For example, union members currently have no meaningful way to evaluate the appropriateness of large expenditures for generalized purposes. Recent form LM–2 reports filed with the Department disclosed, for example, expenditures of $7,805,827 for ''Civic Organizations,'' $3,927,968 for ''Sundry Expenses,'' and $7,863,527 for ''Political Education.'' Amounts reported as ''Other Disbursements'' and described generally have been equally difficult to identify. For example, recent reports disclosed disbursements of $68,712,248 for grants to joint projects with state and local affiliates; $22,991,729 for financial

assistance paid to local and district lodges; and $19,322,938 for organizing and servicing. While the activities described appear to be those for which a union might be expected to spend money, the current form does not require the union to disclose the identity of the recipient of the funds, making it difficult to determine whether these amounts were actually spent for the described activities.

The large dollar amount and vague description of such entries make it essentially impossible for members to determine whether or not their dues were spent appropriately, which is precisely the reason that the statute requires reporting. The Senate Report on the version of the bill later enacted as the LMRDA stated clearly, ''the members who are the real owners of the money and property of the organization are entitled to a full accounting of all transactions involving their property.'' A full accounting was described as ''full reporting and public disclosure of union internal processes and financial operations.'' Senate Report No. 187 on S. 1555, submitted by Senator John F. Kennedy from the Committee on Labor and Public Welfare, 86th Cong., 1st Sess., reprinted in 1959 U.S. Code Cong. & Admin. News 2318, pp. 2324 & 2318.

Technological advances have made it possible to provide the level of detail necessary to give union members a more accurate picture of their union's financial condition and operations without imposing an unwarranted burden on reporting unions. Although no specific data exist regarding the extent to which unions have already embraced the technology necessary to provide reports in electronic form, OLMS staff who review the filed reports and provide compliance assistance have determined that the vast majority of unions required to file form LM–2 use computerized recordkeeping systems. Several OLMS field offices have noted that even smaller unions that file form LM–3 keep electronic books. In addition, in the first year in which software was available to prepare the current forms for filing, approximately 40% of all filers (forms LM–2, LM–3 and LM–4) have used the software. Information regarding the burden imposed by making the proposed changes and the benefit to be gained is most likely to be obtained by proposing the changes for comment so that unions who file these reports, union members, and other groups that represent workers can express their views.

Software to be provided by the Department will facilitate use of the proposed revised form LM–2. The software will offer filers two options to complete and submit the form. A union that chooses the first option will be able to ''copy and paste,'' or manually type, information from their own record keeping system directly into the form using a commercial off-the-shelf form filler application. A union that chooses the second option will use technical standards provided by the Department to make adjustments to their own accounting programs that will enable them to seamlessly export data from the union's accounting system into the form. Once the data reconfiguration is complete, the union will simply use the reconfigured format for its normal bookkeeping. This method will be particularly helpful to larger form LM–2 filers inasmuch as each transaction will not have to be reentered by hand. Whether the union enters the information by hand into the form, or exports data at the end of the year to the filing software, the software provided by the Department will check for typographical and mathematical errors, and other discrepancies, which must be corrected before the union may file the report electronically.

OLMS case files demonstrate that union members would also benefit from changes in the way financial information is reported by the largest labor organizations on form LM–2 since the availability of more detailed information would provide a deterrent to fraud and embezzlement by corrupt officials. Over the past five fiscal years (FY 1998 to FY 2002), OLMS investigations of alleged fraud and embezzlement by union officials and related parties resulted in over 640 criminal convictions. Although courts ordered the responsible officials to pay $15,446,896 in restitution, in addition to debarring them from union service for a combined total of almost ten thousand years, unions and their members lost far more money as a result of this criminal activity than could be recovered by the Department on behalf of aggrieved members. In many of the serious cases investigated by OLMS, the broad aggregated categories on the existing forms made it possible to hide embezzlements, self-dealing, overspending and financial mismanagement. For example, accountants recently pled guilty to criminal charges related to the falsification of form LM–2 reports filed by an international union. In order to avoid detailed reporting, officials had shifted disbursements from the ''Office and Administrative Expenses'' category, which has a supporting schedule that requires some detail, to the ''Educational and Publicity Expense'' category, in which expenses are reported as a single aggregated total with no description. Although the fraudulent reporting was ultimately uncovered, the lack of supporting detail in the latter category enabled the officials to hide in excess of $1.5 million in personal dining, drinking and entertainment expenses from 1992 to 1999. This case demonstrates that detailed reporting can be an effective deterrent, and that more detail throughout the form LM–2 would further discourage malfeasance.

The foregoing changes will be made only to the form LM–2, which must be filed by the largest labor organizations. An additional change, which is needed to ensure that union members the government, and the public can obtain information on organizations affiliated with unions, as the statute requires, will apply to all labor organizations. The current forms LM–2 and LM–3 require that unions report ''subsidiary'' organizations and define such organizations as ''wholly owned, wholly controlled, and wholly financed by the reporting union.'' Because unions may also have substantial financial dealings with, or through, funds or organizations that are not wholly owned, but that meet the statutory definition of a ''trust in which a labor organization is interested,'' the proposed revision will require all unions to report the assets, liabilities, receipts, and disbursements of all such other organizations that have annual receipts of $200,000 or more on a new form T–1 (Trusts Annual Report) in order to fulfill the purpose of the statutory reporting requirements.

These separate organizations pose the same transparency challenges as ''off-the-books'' accounting procedures in the corporate setting: large-scale, potentially unattractive financial transactions can be shielded from public disclosure and accountability through artificial structures, classification and organizations. The proposed reform would substantially improve transparency of significant organizations that are financially connected to reporting labor organizations. Currently, if a union transfers funds to another organization, but does not disclose disbursements made by that organization, union members may have no way to determine whether the funds in question were actually spent for the benefit of members. Union members have a similar interest in obtaining information about funds provided for the benefit of members by employers pursuant to collective bargaining agreements, even if those funds are provided to a separate, jointly administered account rather than

directly to the union. Since the money an employer contributes to such a ''trust'' for union members' benefit might otherwise have been paid directly to workers in the form of increased wages and benefits, the members on whose behalf the financial transaction was negotiated have a right to know what funds were contributed, how the money is managed and how it is being spent.

However, if annual audits or financial reports providing the same information and a similar level of detail are otherwise available for organizations that meet the statutory definition of a trust, the only additional information a union would be required to report on form LM–2 is a statement that such a report or audit has been filed and is freely available on demand, and where it can be obtained. Thus, if reports are filed pursuant to 26 U.S.C. 527, or the requirements of the Employee Retirement Income Security Act of 1974, 29 U.S.C. 1023 (ERISA), or if annual audits are available under § 302(c)(5)(B) of the Labor Management Relations Act, 29 U.S.C. 186(c)(5)(B) (LMRA), or if the organization files publicly available reports with a Federal or state agency as a Political Action Committee (PAC), no form T–1 will be required. The reporting labor organization will be required to state where the specific alternative reports are available for inspection, however. Only those reports listed in the Instructions as satisfying the disclosure requirement will be considered sufficient to relieve a union of the obligation to file a form T–1 for a trust in which a labor organization is interested that meets the reporting threshold. The Department invites comments on whether these reports, or others, provide sufficient information to dispense with the requirement that the labor organization also file a form T–1 for a trust or other fund in which it is interested.

Members have a direct financial interest in obtaining detailed, reliable information on significant trusts' financial operations, so they can determine whether funds are being spent in ways that benefit the members for whom they were created. There have been reports, for example, that joint training funds have been used to pay union officials supplementary salaries or host extravagant parties for trustees. Without adequate financial disclosure, it is impossible for union members to assess these trusts and fully exercise their self-governing democratic membership rights.

OLMS case files also indicate that there are a number of organizations about which union members have requested information without success because the organizations were not wholly owned by the union and, therefore, the union was not required to report the organization as a subsidiary. In one example, OLMS found that 29 local unions contributed an average of $62,000 per month to a statewide strike fund. Although union members are likely to have an interest in how such funds are invested and spent, no single union wholly owned the fund, and therefore no union was required to report disbursements made by the fund. Strike funds typically fall within the statutory definition of a ''trust in which a labor organization is interested,'' but may not be required to report under ERISA or the LMRA. Under the proposed revision, each union that contributes $10,000 or more to such a fund will be required to file a form T–1 with respect to the fund, if the strike fund has annual receipts of $200,000 or more, thereby providing union members much more information about the financial activities of their union and the fund in which it has an interest.

In another case, local union officials had established a building fund financed partly with union members' pension funds. The union was not required to report financial information about the building fund, because the union did not wholly own it; part of the building fund's financing was provided by the union's pension fund. Whether or not the separate contributions made by the pension fund are required to be reported under ERISA, the building fund itself is a ''trust in which a labor organization is interested'' under the definition in the LMRDA. The proposed revision of form LM–2 will require that information for such entities be reported on form T–1, if the union's contribution during the reporting year is $10,000 or more and the entity's annual receipts from all sources total $200,000 or more.

A third case illustrates the current barriers to disclosure: one union local accounted for 97% of the funds on deposit at a credit union; membership in the credit union was limited to members of the Local and two other union locals, and all of the credit union directors were Local officials and employees. The credit union made large loans, many near $20,000, to union officials, employees and their family members. Four loan officers, three of whom were officers of the Local, received 61% of the credit union's loans. Union members did not have ready access to information about these loans because the Local did not wholly own the credit union. Again, the members had an interest in the financial operations of the organization in question but, under the existing rules, their union was not required to report these activities in its form LM–2. Under the proposed reform, a credit union established by a union primarily for the benefit of its members is an organization that meets the statutory definition of a ''trust in which a labor organization is interested'' and the union will be required to report financial information for the benefit of members on form T–1.

These reforms will provide union members, the public, and the government the information they need to properly ensure union democracy, fiscal integrity and transparency in a manner consistent with the intent of Congress in enacting the LMRDA. The revised form LM–2 will provide detailed information about financial transactions of labor organizations in an easily understood format. The new reports will be usefully organized according to the services and functions provided to union members and the members will be able to identify major receipts and disbursements for a variety of activities. The new form LM–2 strengthens enforcement of the LMRDA by giving members, the government, and the public a full account of their union's financial operations, which is made much more feasible and less costly by technological advances that enable electronic recordkeeping, filing and disclosure of financial information. Because the information will be provided electronically and in more detail than the current forms require, the proposed revision will substantially enhance the Department's ability to review the information provided and to enforce other provisions of the LMRDA. Finally, the proposed reform will also require additional reporting by all unions for trusts in which a labor organization is interested, providing substantially more information than is now available to union members, the public, and the government.

II. Authority

A. Legal Authority

The legal authority for the notice of proposed rule-making is sections 201, 208, and 301 of the Labor-Management Reporting and Disclosure Act of 1959, as amended (LMRDA), 29 U.S.C. 431, 438, and 461.

B. Departmental Authorization

Section 208 of the LMRDA provides that the Secretary of Labor shall have authority to issue, amend, and rescind rules and regulations prescribing the form and publication of reports required to be filed under title II of the Act and

such other reasonable rules and regulations as she may find necessary to prevent the circumvention or evasion of the reporting requirements. Secretary's Order 4–2001, issued May 24, 2001, and published in the **Federal Register** on May 31, 2001 (66 FR 29656), continued the delegation of authority and assignment of responsibility to the Assistant Secretary for Employment Standards in Secretary's Order 5–96 of those functions to be performed by the Secretary of Labor under the LMRDA.

III. Overview of the Revised Form LM–2 and Instructions

This is a ''section-by-section'' discussion of the sections, items and schedules of the form LM–2 and instructions to which significant revisions are proposed:

Section I. Who Must File: The instructions to form LM–2 adopt the recent holding of the U.S. Court of Appeals for the Ninth Circuit in *Chao* v. *Bremerton Metal Trades Council,* AFL–CIO, 294 F.3d 1114 (2002), interpreting section 3(j) of the LMRDA, because that interpretation gives full meaning to the plain language of the statute. In that case, the Court ruled that an intermediate labor organization that has no dealings itself with private employers and no members who are employed in the private sector may nevertheless be a labor organization engaged in commerce within the meaning of section 3(j) of the LMRDA if the intermediate body is ''subordinate to a national or international labor organization which includes a labor organization engaged in commerce.'' Accordingly, the Instructions will clarify that any ''conference, general committee, joint or system board, or joint council'' that is subordinate to a national or international labor organization will be required to file an annual financial form if the national or international labor organization is a labor organization engaged in an industry affecting commerce within the meaning of section 3(j) of the LMRDA.

Section IV. How to File: This section replaces Section IV. Where to File in the existing form LM–2 instructions to implement mandatory electronic filing. Mandatory electronic filing will minimize the burdens for unions that file form LM–2, and increase efficiency for the Department of Labor as it processes the reports and makes the reports available to union members and the public. The software necessary to record information in the form will be provided by the Department to all reporting unions. A union will be permitted to file a paper format form LM–2, however, if it claims a temporary hardship exemption or applies for and is granted a continuing hardship exemption. The hardship exemption procedures are modeled after the procedures used by the Securities and Exchange Commission (17 CFR 232.201–202) and are explained in the instructions to the form that accompany this notice. The Department invites comments regarding whether the hardship exemption procedures are appropriate and whether there are any alternative procedures that might better address legitimate problems without permitting unions to avoid electronic filing where it is feasible for them to file electronically.

Section X. Trusts in Which a Labor Organization is Interested: Labor organizations must disclose certain financial information of a significant trust in which the labor organization is interested in order to fulfill and prevent the circumvention of the statutory reporting requirements. Similarly, financial information concerning significant funds placed under a labor organization's control, for the benefit of its members, must be made available to members if they are to have a complete and reliable picture of the organization's financial condition and operation.

A trust in which a labor organization is interested is defined by statute as

> a trust or other fund or organization (1) which was created or established by a labor organization, or one or more of the trustees or one or more members of the governing body of which is selected or appointed by a labor organization, and (2) a primary purpose of which is to provide benefits for the members of such labor organization or their beneficiaries.

29 U.S.C. 402(l). This definition of a trust in which a labor organization is interested may include, but is not limited to: joint funds administered by a union and an employer pursuant to a collective bargaining agreement, educational or training institutions, credit unions created for the benefit of union members, and redevelopment or investment groups established by the union for the benefit of its members. The determination of whether a particular entity is a trust in which a labor organization is interested must be based on the facts in each case. A trust will be considered significant, and therefore must be reported, if it has annual receipts of $200,000 or more.

In some instances, a union may have a limited interest in a trust, but not extensive control over the trust, or complete information regarding all of the financial transactions of the trust. For example, some smaller unions may provide limited funding for a training center or other enterprise created by other, larger unions. Those smaller unions may not, therefore, be in a position to require the entity to provide information necessary on the financial operations of the trust. In such circumstances, provided that a union's financial contribution to a trust, or a contribution made on the union's behalf or as a result of a negotiated agreement to which the union is a party, is less than $10,000 during the union's reporting year, the union need only report the existence of the trust and the amount of the contribution. A labor organization that is providing significant funds to a trust, on the other hand, should be able to require the trust to provide a more detailed accounting of the trust's financial activities. Accordingly, if the contribution of the reporting union, or the contribution made on the union's behalf or as a result of a negotiated agreement to which the union is a party, to the trust is $10,000 or more during the union's reporting year, the labor organization will be required to report certain financial information of the trust on the proposed new separate form (form T–1), if the trust has annual receipts of $200,000 or more.

Form T–1 must be filed within 90 days of the end of the trust's fiscal year. The Department welcomes comments regarding alternative deadlines for filing the trust report.

Form T–1 contains various types of financial information that is intended to discourage circumvention or evasion of the reporting requirements in title II while imposing minimal burden. In particular, the reporting union will be required to report the amount of its contribution and of any contribution made on its behalf, as well as the total receipts and liabilities of the trust. Unions will be required to separately identify any individual or entity from which the trust receives $10,000 or more during the reporting year, any individual disbursement of $10,000 or more during the reporting period, as well as any entity or individual that received disbursements that aggregate to $10,000 or more from the trust during the reporting period.

Consideration was given to requiring a union to file separate form LM–2 reports for trusts or other organizations in which it has an interest or to require a union to separately identify disbursements in the same amounts as ''major'' disbursements that unions themselves are required to report. In order to reduce the burden on unions that may not have as ready access to trust records as to their own, it was decided to place the reporting threshold sufficiently high that a union might be

expected to require its trusts or other organizations to provide it with information about financial transactions in these amounts. The Department invites comments on whether a union that contributes $10,000 to an organization meeting the statutory definition of a trust should be required to file a form T–1 or whether the necessary information regarding trusts will be disclosed if such a report is required only if the amount contributed by or on behalf of the reporting union is a significant percentage (for example, 5%, 10% or 25%) of the total receipts of the organization. The Department also invites comments on whether the threshold for separately identifying receipts and disbursements of trusts is placed at the appropriate level.

No separate report will be required for Political Action Committee (PAC) funds if publicly available reports on the PAC funds are filed with a Federal or State agency, or for a political organization for which reports are filed with the Internal Revenue Service pursuant to 26 U.S.C. 527, or for a fund described in sections 302(c)(5) through (9) of the LMRA, 29 U.S.C. 186(c)(5) through (9), or for a plan that filed complete annual financial reports, returns and schedules pursuant to the requirements of ERISA, 29 U.S.C. 1023 and 29 CFR 2520.103–1, for the plan year ending with or within the year preceding the year covered by the reporting union's LM–2, LM–3 or LM–4, or if annual audits are made freely available on demand for inspection by interested persons under section 302(c)(5)(B) of the LMRA, 29 U.S.C. 186(c)(5)(B)).

The Department invites comments with respect to whether the procedures for reporting trusts are appropriate and sufficient, and whether there are alternate or additional means to achieve full disclosure while minimizing the burden on reporting entities. In particular, the Department has considered whether information about the immense numbers of financial transactions that currently go unreported, but in which union members have a substantial personal interest, could be better obtained by expanding the definition of subsidiaries for which unions are required to report assets, liabilities, receipts, and disbursements. Under the current rule, labor organizations are required to report on the finances of only those subsidiary organizations that are 100% owned, controlled and financed by the labor organization. Commenters are invited to comment on whether information that is useful to union members, the government, and the public might be more readily obtained if unions were required to report the assets, liabilities, receipts, and disbursements of entities that are dominated or controlled by the labor organization to such a degree that assets, liabilities, receipts and disbursements of the entity effectively are those of the union itself. Whether the putatively reporting entity is, in fact, a ''single entity'' with the union would be determined by the degree to which there is common ownership, common directors and/or officers, *de facto* exercise of control, unity of personnel policies emanating from a common source, and dependency of operations. Under this analysis, unions would be required to report financial information for any entity with respect to which there is such a substantial degree of integration of operations and common management. Similar analyses are used to determine whether multiple companies constitute a ''single entity'' pursuant to Executive Order 11246 (See, *e.g.*, *Beverly Enterprises, Inc.* v. *Herman,* 130 F. Supp. 2d 1, 22 (D.D.C. 2000)), and to determine whether two or more companies constitute a single employer for the purpose of imposing obligations under the National Labor Relations Act (See, *e.g., N.L.R.B.* v. *Browning-Ferris Industries of Pennsylvania, Inc.,* 691 F.2d 1117 (3d Cir. 1982); *Local 627, Int'l Union of Operating Engineers* v. *N.L.R.B.,* 518 F.2d 1040, 1045–46 (D.C. Cir. 1975), aff'd on this issue sub nom. *South Prairie Construction Co.* v. *Local 627, Int'l Union of Operating Engineers,* 425 U.S. 800 (1976)).

Commenters are invited to address, in particular, whether requiring unions to report the financial activities of entities that meet a ''single entity'' test would provide better information to union members than the requirement to report the financial activities of trusts in which unions have an interest, and whether it would be easy for a union to identify entities that meet such a test. Commenters addressing this issue may also wish to comment on the fact that since assets and receipts of a ''single entity'' with the union would be reportable as assets and receipts of the union itself (rather than assets of an organization in which the union has an interest), unions that might not otherwise have $200,000 in receipts would have to use the proposed form LM–2 to file their annual report if their receipts plus those of the organization with which the union is determined to be a ''single entity'' exceed $200,000.

Section XI. Completing form LM–2. Information items 1 through 24.

Item 3. Amended, Hardship Exempted, or Terminal Report: This item was revised to include a new box that must be checked for labor organizations filing a report according to the hardship exemption procedures, and to eliminate the box for ''subsidiary organizations.'' The new entry will help union members and members of the public discern whether a report filed after the deadline was delinquent or was filed according to the hardship exemption procedures. It will also help OLMS process the reports. The subsidiary box was eliminated because subsidiary organizations are replaced by trusts in the new form LM–2.

Schedules 1 Through 12: Discussion of the new and revised schedules follows.

Schedule 1—Accounts Receivable Aging Schedule: This new schedule, which does not exist in the current form LM–2, requires labor organizations to report: (1) The individual accounts that are valued at $1,000 or more and that are more than 90 days past due at the end of the reporting period or were liquidated, reduced or written off during the reporting period; and (2) the total aggregated value of all other accounts (that is, those that are less than $1,000) that are more than 90 days past due at the end of the reporting period or were liquidated, reduced or written off during the reporting period. The threshold of $1,000 eliminates the burden of individually reporting routine collections of dues and other fees.

This schedule will provide information to union members regarding how effectively the union collects debts owed to the union. For example, union members have an interest in knowing whether their union continues to do business with an entity or individual that does not pay its debts. The Department specifically invites comments regarding the question whether $1,000 is an appropriate level at which to require that such accounts be individually reported.

Schedule 5—Investments Other Than U.S. Treasury Securities: This revised schedule, which is schedule 2 of the current form LM–2, changes the thresholds for reporting the book value of individual marketable securities and other investments from those that have a book value of at least $1,000 and exceed 20% of the total book value of all marketable securities or other investments of the labor organization to $5,000 and 5% respectively. The change is necessary because $1,000 can now be considered a de minimis amount and 20% of book value is unreasonably high. It would be possible for unions to invest a significant amount of money and still not exceed 20% of the total book value of the union's investments. For example, an international union with

$20 million in investments may own $1 million in stock of a certain company, which would be 5% of the total book value of the union's investments. Under the existing requirements, the investment would not be reported because it does not exceed 20% of the total book value, and yet $1 million is certainly a significant investment of union members' assets. The dollar threshold was raised to prevent unnecessary reporting of small investments that might be picked up as a result of lowering the percentage threshold to 5%. The Department invites comments with respect to whether the thresholds for reporting the value of investments are appropriate.

Schedule 8—Accounts Payable Aging Schedule: This new schedule, which does not exist in the current form LM–2, requires labor organizations to report: (1) The individual accounts that are valued at $1,000 or more that are more than 90 days past due at the end of the reporting period or were liquidated, reduced or written off during the reporting period; and (2) the total aggregated value of all other accounts (that is, those that are less than $1,000) that are more than 90 days past due at the end of the reporting period or were liquidated, reduced or written off during the reporting period.

This schedule will provide critical information to union members regarding the solvency and financial reliability of their union. OLMS case files reveal that when a union local falls behind in paying its debts, it is often having cash flow problems and these problems may be due to embezzlement, overspending or mismanagement. In one case, an international union reported that an intermediate body was placed in trusteeship because the union had repeatedly failed to pay its per capita tax. An OLMS investigation subsequently found that the intermediate union was delinquent on a wide range of accounts because an officer of the union had been embezzling funds. Under the new schedule, these accounts would have been disclosed, in detail, on the annual report and the problem may have been discovered and addressed before the international was forced to put the local in trusteeship. The Department believes this new schedule is a vital ''early warning system'' to help union members assess the financial viability of their union and detect cases of mismanagement and malfeasance in time to prevent substantial and unrecoverable losses of union members' funds. The Department invites comments regarding whether $1,000 is an appropriate level at which to require that such accounts be individually reported.

Schedule 11—All Officers and Disbursements to Officers: There are two significant changes to this schedule in the new form LM–2: (1) The reporting union will be required to estimate the percentage (rounded to the nearest 10%) of time spent performing duties related to the categories listed in schedules 15 through 22, and to allocate the relevant percentage of the total disbursement to that officer to the appropriate category; and (2) the categories of disbursements to officers are broadened so that all withholdings will be allocated to the disbursement schedules with the relevant percentage of the net salary of the officer. The time allocated among the categories for each officer should total 100% of that officer's time. The existing forms list the compensation for each officer of the union, but there is no indication of what services the officer provided for the members of the union.

Salary and other forms of compensation to officers are often a significant percentage of the total disbursements of the union and, as fiduciaries of the union, the officers take an active role in the services provided by the union to its members. Union members should therefore be able to find out from the form LM–2 how their elected officers are spending their time, so they can be held properly accountable to the interests and priorities of the members. These changes will give union members much more useful and detailed information on the services performed by the union and the operations of the union during the reporting period.

This proposal varies significantly from the rule promulgated in 1992 and rescinded in 1993 in that labor organizations are not required to determine with precision what portion of each officer's time is spent on each activity. Rather, the reporting labor organization need only estimate, to the nearest 10%, the time spent by each officer on duties that fall within one of the categories and to allocate the appropriate percentage of the officer's gross salary to that category. This proposal does not present the difficulties inherent in the 1992 rule with respect to determining how to allocate the ''incidental'' activities in which union officers might engage on their own time or while spending the major portion of a workday on activities that fall within a different category, since the amount of time spent on each activity is estimated and reported only as a percentage of total salary.

The Department invites comments regarding whether the allocation of salaries based on estimated time spent on activities provides sufficient information or whether there is an alternative means of allocating the salaries of officers that would provide as much or more information to union members without imposing undue burden on the filers. In particular, the Department invites comments on whether labor organizations should be required to exactly calculate the time spent by officers in performing duties related to specific categories in order to provide information that is useful to members, rather than rounding to 10% estimates.

Schedule 12—Disbursements to Employees: This schedule is used to report the salaries, allowances, and disbursements to each employee of the labor organization who received more than $10,000 in the aggregate, during the reporting period, from the labor organization and any other labor organization affiliated with it or with which it is affiliated, or which is affiliated with the same national or international labor organization. There are two primary changes to this schedule in the new form LM–2: (1) The reporting union will be required to estimate the percentage (rounded to the nearest 10%) of time spent performing duties related to the categories listed in schedules 15 through 22, and to allocate the relevant percentage of the total disbursement to that employee to the appropriate category; and (2) the categories of disbursements to employees are broadened so that all withholdings will be allocated to the disbursement schedules with the relevant percentage of the net salary of the employee. The time allocated among the categories for each employee should total 100% of that employee's time. The existing forms list the compensation for each employee of the union who earned $10,000 or more during the reporting period, but there is no indication of what services the employee provided for the members of the union.

The reasons for this change are essentially the same as in schedule 11. Salary and other forms of compensation to employees are often a significant percentage of the total disbursements of the union, and union employees take an active role in the services provided by the union to its members. Union members should therefore be able to find out from the form LM–2 how the union's employees are spending their time, so the employees can be held accountable to the members' interests and priorities. These changes are an integral part of providing reports to union members that reflect the services performed by the union and further

explain the operations of the union during the reporting period.

This proposal varies significantly from the rule promulgated in 1992 and rescinded in 1993 in that labor organizations are not required to determine with precision what portion of each employee's time is spent on each activity. Rather, the reporting labor organization need only estimate, to the nearest 10%, the time spent by each employee on duties that fall within one of the categories and to allocate the appropriate percentage of the employee's gross salary to that category. This proposal does not present the difficulties inherent in the 1992 rule with respect to determining how to allocate the ''incidental'' activities in which union employees might engage on their own time or while spending the major portion of a workday on activities that fall within a different category, since the amount of time spent on each activity is estimated and reported only as a percentage of total salary.

The Department invites comments regarding whether the allocation of salaries based on estimated time spent on activities provides sufficient information or whether there is an alternative means of allocating the salaries of union employees that would provide as much or more information to union members without imposing undue burden on the filers. In particular, the Department invites comments on whether labor organizations should be required to exactly calculate the time spent by employees in performing duties related to specific categories in order to provide information that is useful to members, rather than rounding to 10% estimates.

Schedule 13—Membership Status Information: This new schedule requires that unions report the total number of union members by type of membership. The membership categories include active members, inactive members, associate members, apprentice members, retired members, other members, and agency fee payers. Unions will enter ''0'' or ''N/A'' for any category in the schedule that does not apply. The existing forms do not provide a breakdown of any kind, and the definition of ''member'' in the instructions is too broad to ensure consistency. ''Member'' is currently defined as ''all categories of members who pay dues.'' Consequently, a union member has no way of knowing what criteria the union is using to define ''member,'' and there is no way to discern the demographics of the membership or to compare these statistics to other unions. The new schedule will provide specific information to union members who want to know the breakdown of the union's membership by specific categories.

A detailed breakdown of membership will help union members obtain a clear understanding of the financial condition and operations of the union, and enable members to assess the union's financial stability today and in the future. For example, it would be useful for union members to know if the union has a high percentage of retired members compared to active members, because this may be indicative of the union's future financial viability. The number of apprentice members may provide a useful prospective on how many new members the union acquired. This can be critical information because a union with few new members may be less likely to prosper; therefore members might want their union to allocate more resources to recruit new members. It is also important to know how many members are inactive due to seasonal unemployment or layoffs, which are often affected by the terms of a collective bargaining agreement. Associate members are similar to retired members in that they pay dues but are not represented by the union in a collective bargaining agreement; however, they do represent a category of dues-paying member and may exercise influence in a union. Finally, agency fee payers are not members of the union, but the union represents them in the collective bargaining process and they make payments to the union for that representation. Accordingly, agency fee payers are not included in the total number of members of the union but they are an important source of revenue, and the schedule would be incomplete if it omitted the number of such individuals. Each category provides unique information that will help union members determine the current position of the union, its relative member interests and influence, and its likely future directions, in a way that is not clear by simply examining current financial data.

In rescinding the 1992 rule, the Department asserted that ''it would be burdensome and confusing to attempt to require labor organizations to clarify the reported information by eliminating certain categories or breaking the total number of dues paying members into component parts.'' 58 FR 67598. No support was provided for this assertion, however, and it seems to be at odds with the fact that unions must already track this information in order to collect dues, conduct union elections, and calculate per capita taxes. All unions must currently know who can vote on a new contract or in a union election, and voting status may vary by type of membership. Most local unions must pay per capita tax to a parent body, and per capita tax rates may vary by type of membership. In each case, the union must already track membership information by categories.

The Department invites comments regarding the question whether this information should be required and whether certain membership categories should be included or excluded from the list. The Department also invites comments on the question whether a labor organization should also be required to report the total amount of dues paid by each of the various categories of members and fee payers and the amount that the union paid or received in per capita for each category.

Schedules 14 Through 22: Schedules 14 through 22 will greatly improve the quality and quantity of information provided to union members regarding the financial operation of their union.

Schedule 14 requires labor organizations to report the total amount of ''other'' receipts during the reporting period (''other receipts'' are all receipts other than those that must be reported elsewhere in statement B of form LM–2). The labor organization will also be required to separately identify any ''major'' receipts during the reporting period. A ''major'' receipt includes: (1) Any individual receipt of $5,000 or more; or (2) total receipts from any single entity or individual that aggregate to $5,000 or more during the reporting period.

Schedules 15 through 22 require labor organizations to report the total amount of disbursements made during the reporting period for each of the following categories: Contract negotiation and administration; organizing; political activities; lobbying; contributions, gifts and grants; benefits; general overhead; and other disbursements. Labor organizations will also be required to separately identify all ''major'' disbursements during the reporting period in the various categories. A ''major'' disbursement includes: (1) Any individual disbursement of a certain amount, which should be from $2,000 to $5,000; or (2) total disbursements to any single entity or individual that aggregate to the same amount during the reporting period. The Department requests comments on the actual amount, in the $2,000 to $5,000 range, at which a disbursement should be considered ''major.'' If an entity or individual receives a number of payments from the union during the reporting period that are properly allocated to separate

categories, the union need only separately identify those payments of the specified amount ($2,000–$5,000) or more in the specific category. For example, if a union pays a total of $10,000 to a printer during the reporting year and determines that $9,000 of that bill should be allocated to lobbying costs, that amount must be identified in schedule 18. If the remaining $1,000 paid to the same printer over the course of the year was attributable to contract administration expenses, that amount will be reported in the total under schedule 15, but need not be separately identified.

The Department specifically invites comments regarding whether the definition of a ''major'' receipt, as an individual receipt that is $5,000 or more, or receipts from the same entity or individual that aggregate to $5,000 or more during the reporting period, is either too high or too low. The Department also specifically invites comments regarding the exact threshold, within the $2,000 to $5,000 range, that should be used to determine whether a disbursement is ''major,'' either as an individual disbursement, or with respect to disbursements to the same entity or individual that aggregate to a certain amount during the reporting period. The Department also requests comments on the question whether a union should be required to separately identify disbursements that, in the aggregate, total less than that threshold amount in a particular category to an individual or entity once the threshold has been reached either in another category or in a combination of categories.

This individual identification of receipts and disbursements will enable union members to meaningfully assess the financial operations of the union, but will not require unnecessary reporting of all minor receipts and disbursements. The existing forms provide only aggregate totals of receipts and disbursements that offer an unhelpful and vague picture of the financial condition and operations of the union. The new form LM–2 will organize these receipts and disbursements in useful categories that more accurately reflect the services provided to the members by the union. Moreover, this form of reporting is facilitated by modern developments in electronic recordkeeping, filing, and disclosure that will increase the accountability and responsiveness of unions to their members. Because electronic recordkeeping is now relatively simple and the software required is inexpensive, it is used routinely even by very small organizations. Based on the experience of OLMS field offices, it is expected that unions large enough to be required to report using the form LM–2 already perform most, or all, financial recordkeeping electronically.

As explained above and in the Instructions for filling out form LM–2, unions will be able to choose either to type in or copy and paste disbursements manually or to seamlessly export financial data from the union's recordkeeping system by using software that will be made available by OLMS. The Department assumes that labor organizations with annual receipts of $200,000 follow standard business practices and keep track of the purposes for which money is spent. The Department, therefore, has endeavored to identify specific categories that are likely to describe the most common important purposes for which unions spend money and that are likely to be useful and meaningful to the labor organization and to its members. The Department does not believe that this requirement will impose any undue burden on reporting labor organizations because this sort of allocation is consistent with standard business practices and is already required to some degree in the existing forms. Unions must already track the purpose for each disbursement in order to appropriately aggregate them into the categories on the current form. Unions are also required to categorize disbursement in order to complete Internal Revenue Service form 990 or form 990–EZ, which all labor organizations that file form LM–2 are also required to file if they are exempt from taxation under 26 U.S.C. 501(c)(5).

The proposed new categories are reflected in the following new disbursement schedules:

Schedule 15—Contract Negotiation and Administration: The proposed schedule for contract negotiation and administration will include preparation for, and participation in, the negotiation of collective bargaining agreements and the administration and enforcement of collective bargaining agreements, including the administration and arbitration of union member grievances.

Schedule 16—Organizing: The proposed schedule for organizing will include disbursements for efforts to become the exclusive bargaining representative for any unit of employees, or to keep from losing a unit in a decertification election or to another labor organization, or to recruit new members. The Department is sensitive to the anticipated concerns of labor organizations that the disclosure of information regarding amounts spent in specific organizing campaigns may be detrimental to the union in those or future campaigns. At the same time, if no itemization were required with respect to such a major category of expenditures by unions, the category could easily become susceptible to abuse. Because unions are expected to spend large amounts for organizing, it would be relatively easy to hide fraud and embezzlement within the lump sum reported for organizing disbursements. In addition, the fact that union members should expect their unions to spend money on organizing does not diminish their interest in knowing how that money is spent. In order to minimize any impact of reporting on the success of organizing efforts, however, neither the name of the employer nor the specific bargaining unit that is the subject of the organizing activity need be identified. The Department invites comments regarding any other means by which unions' legitimate interests may be safeguarded while at the same time advancing the twin goals of enhanced enforcement and complete transparency.

Schedule 17—Political Activities: The proposed schedule for political activities will include political disbursements or contributions that are intended to influence the selection, nomination, election, or appointment of anyone to a Federal, State, or local executive, legislative or judicial public office, or office in a political organization, or the election of Presidential or Vice Presidential electors, and support for or opposition to ballot referenda. It does not matter whether the attempt succeeds. Included are disbursements for political communications with members (or agency fee paying nonmembers) and their families, registration, get-out-the-vote and voter education campaigns, the expenses of establishing, administering and soliciting contributions to union segregated political funds (or PACs), and other political disbursements.

Schedule 18—Lobbying: The proposed schedule for lobbying will include dealing with the executive and legislative branches of the Federal, State, and local governments and with independent agencies and staffs to advance the repeal of existing laws, or the passage or defeat of new legislation, or the promulgation of rules or regulations (including litigation expenses). It does not matter whether the lobbying attempt succeeds.

Schedule 21—General Overhead: The proposed schedule for general overhead will include disbursements for overhead that do not support a specific function, such as support personnel at the union's

headquarters, and that, therefore, cannot be reasonably allocated to the other disbursement schedules.

The Department invites comments on the question whether the categories added to form LM–2 by the proposed revision would provide information to union members that will be useful and will assist them in participating in the governance of their unions. In addition, the Department invites comments on whether other categories should be added to, or whether any categories should be eliminated from, form LM–2.

Statement B—Receipts and Disbursements: Cash Disbursements:

Item 65. Strike Benefits: The proposed category of strike benefits will include all disbursements made to the members (or agency fee paying nonmembers) of the labor organization associated with strikes (including recognitional strikes), work stoppages and lockouts, including payments to or on behalf of members and others.

IV. Overview of the Revised Form LM–3 and Instructions

Section I. Who Must File: The instructions to form LM–3 also adopt the recent holding of the U.S. Court of Appeals for the Ninth Circuit in *Chao* v. *Bremerton Metal Trades Council, AFL–CIO,* 294 F.3d 1114 (2002), interpreting section 3(j) of the LMRDA. Accordingly, the Instructions will clarify that any ''conference, general committee, joint or system board, or joint council'' that is subordinate to a national or international labor organization will be required to file an annual financial form if the national or international labor organization is a labor organization engaged in an industry affecting commerce within the meaning of section 3(j) of the LMRDA.

The only other change that is proposed to the form LM–3 used by labor organizations that have gross annual receipts of between $10,000 and $200,000 is the elimination of the question whether they have a wholly owned, controlled, or financed subsidiary. Instead, such a union will be required to report financial information for any significant trust in which it has an interest. If the reporting union contributes $10,000 or more to the trust during the union's reporting year, or a contribution of $10,000 or more is made on the union's behalf or as a result of a negotiated agreement to which the union is a party during the union's reporting year, and the trust has annual receipts of $200,000 or more, the union will be required to file a form T–1 for the trust. According to year 2000 report data, 545 unions with receipts less than $200,000 that filed a form LM–3 reported having an interest in a trust, but were not required to quantify their interest, or to report any financial information with respect to these entities. Commenters are invited to comment on the question whether the Department's proposal strikes an appropriate balance between the need for transparency with respect to the financial relationships that involve significant amounts of union funds and the burden on smaller unions.

V. Overview of the Revised Form LM–4 and Instructions

Section I. Who Must File: The Instructions to form LM–4 also adopt the recent holding of the U.S. Court of Appeals for the Ninth Circuit in *Chao* v. *Bremerton Metal Trades Council, AFL–CIO,* 294 F.3d 1114 (2002), interpreting section 3(j) of the LMRDA. Accordingly, the Instructions will clarify that any ''conference, general committee, joint or system board, or joint council'' that is subordinate to a national or international labor organization will be required to file an annual financial form if the national or international labor organization is a labor organization engaged in an industry affecting commerce within the meaning of section 3(j) of the LMRDA.

The only other change that is proposed to the form LM–4 used by labor organizations that have gross annual receipts of less than $10,000 is the addition of a question whether the union created or participated in the administration of a trust, as defined above and in the instructions. Such a labor organization will also be required to file a form T–1 for any trust in which it has an interest that has annual receipts of $200,000 or more if it contributes $10,000 or more to the trust during the union's reporting year, or a contribution of $10,000 or more is made on the union's behalf or as a result of a negotiated agreement to which the union is a party during the union's reporting year. Since unions that qualify to file a form LM–4 have less than $10,000 in annual receipts, it is unlikely that such a union would contribute $10,000 to a trust in which they have an interest, although $10,000 might be contributed on their behalf by another organization. Commenters are invited to comment on the question whether form LM–4 filers should be required to file a form T–1 for any trust in which they have an interest.

VI. Effective Date

In order to provide sufficient time to develop and test the required software, as well as enhancements to the Electronic Labor Organization Reporting System (e.LORS), and to assist all labor organizations in making any necessary adjustments to their own bookkeeping systems that may be required to use the new software, the Department proposes to make the use of revised forms LM–2, LM–3, and LM–4 and form T–1 mandatory for reports for fiscal years that commence after the publication of a final rule revising the form. If a final rule revising these forms were published on May 30, 2003, for example, no union would be required to use the revised form for any report that is due before August 29, 2004. For purposes of example, Table 1 shows when unions with specific filing due dates would be required to use the revised form if the final rule were published on May 30, 2003. Similarly, a reporting union will be required to file a form T–1 for any significant trust in which it has a qualifying interest for fiscal years of the trust that commence after the publication of a final rule.

TABLE 1

End of union's fiscal year	Due dates for filing using the current form LM–2, LM–3, or LM–4	Due dates for the union's first report using the revised form LM–2, LM–3, or LM–4
March 31, 2003	June 29, 2003 & June 29, 2004	June 29, 2005.
June 30, 2003	September 28, 2003	September 28, 2004.
September 30, 2003	December 29, 2003	December 29, 2004.
December 31, 2003	March 31, 2004	March 31, 2005.

The Department invites comments on whether one year is an appropriate time period before labor organizations are required to use the new form and whether labor organizations should be required to use the revised form to report information for a fiscal year that begins within 30 days of the date that a final rule is issued.

VII. Regulatory Procedures

Executive Order 12866

This proposed rule has been drafted and reviewed in accordance with Executive Order 12866, section 1(b), Principles of Regulation. The Department has determined that this proposed rule is not an ''economically significant'' regulatory action under section 3(f)(1) of Executive Order 12866. Based on a preliminary analysis of the data the rule is not likely to: (1) Have an annual effect on the economy of $100 million or more or adversely affect in a material way the economy, a sector of the economy, productivity, competition, jobs, the environment, public health or safety, or state, local, or tribal governments or communities; (2) create a serious inconsistency or otherwise interfere with an action taken or planned by another agency; or (3) materially alter the budgetary impact of entitlements, grants, user fees, or loan programs or the rights and obligations of recipients thereof. As a result, the Department has concluded that a full economic impact and cost/benefit analysis is not required for the rule under section 6(a)(3) of the Order. However, because of its importance to the public the rule was treated as a significant regulatory action and was reviewed by the Office of Management and Budget.

Small Business Regulatory Enforcement Fairness Act

For similar reasons, the Department has concluded that this proposed rule is not a ''major'' rule under the Small Business Regulatory Enforcement Fairness Act of 1996 (5 U.S.C. 801 *et seq.*). It will not likely result in (1) an annual effect on the economy of $100 million or more; (2) a major increase in costs or prices for consumers, individual industries, Federal, State or local government agencies, or geographic regions; or (3) significant adverse effects on competition, employment, investment, productivity, innovation, or on the ability of United States-based enterprises to compete with foreign-based enterprises in domestic or export markets.

Unfunded Mandates Reform

For purposes of the Unfunded Mandates Reform Act of 1995, this rule does not include a Federal mandate that might result in increased expenditures by State, local, and tribal governments, or increased expenditures by the private sector of more than $100 million in any one year.

Executive Order 13132 (Federalism)

The Department has reviewed this rule in accordance with Executive Order 13132 regarding federalism and has determined that the rule does not have federalism implications. Because the economic effects under the rule will not be substantial for the reasons noted above and because the rule has no direct effect on States or their relationship to the Federal government, the rule does not have ''substantial direct effects on the States, on the relationship between the national government and the States, or on the distribution of power and responsibilities among the various levels of government.''

Initial Regulatory Flexibility Analysis

The Regulatory Flexibility Act of 1980, 5 U.S.C. 601 *et seq.*, requires agencies to prepare regulatory flexibility analyses, and to develop alternatives wherever possible, in drafting regulations that will have a significant impact on a substantial number of small entities. The Small Business Administration (SBA) determined, in a regulation that became effective on October 1, 2000, that the maximum annual receipts allowed for a labor union or similar labor organization and its affiliates to be considered a small organization or entity under section 601(4), (6) of the Regulatory Flexibility Act was $5 million. 13 CFR 121.201 (Code Listing 813930). This amount was adjusted for inflation to $6 million by a regulation that became effective on February 22, 2002. Thus, while most of the changes proposed by this rule will apply to only the largest labor organizations, which are required to file form LM–2, it is estimated that many of these labor organizations would be classified as small entities under the SBA regulation because nearly all have annual receipts of between $200,000 and $6 million.

It does not appear that any party has challenged the SBA determination that labor organizations with receipts of over $200,000 a year should be considered ''small,'' nor does it appear that any party has requested that the SBA make an individualized inquiry into the appropriateness of that standard. The Department believes that the $6 million standard set by the SBA seems unreasonably high since approximately 80% of all labor organizations in the United States have annual receipts of less than $200,000 a year. In fact, the largest unions—those that have over $1 million in annual receipts—control over 83.7% of the total receipts of all unions; 92.9% of the total dollar receipts reported by all labor organizations in 2000 were received by labor organizations that filed their annual report on form LM–2. It would seem more accurate to characterize the approximately 21,000 labor organizations that have less than $200,000 in annual receipts and, therefore, are not required to use form LM–2 as ''small'' organizations. Nevertheless, the Department determined that performing a regulatory flexibility analysis with respect to this proposed rule is a better use of Department resources than proceeding with a formal request to change the SBA standard determination. Accordingly, the following analysis assesses the impact of these regulations on small entities as defined by the applicable SBA size standards.

(1) Reasons Why Action by Agency Is Being Considered

The Department is proposing to revise the forms labor organizations use to file the annual financial reports required by the Labor-Management Reporting and Disclosure Act of 1959, as amended (LMRDA or Act). This proposed rule modifies form LM–2, which is the report required to be filed by the largest labor organizations, and makes minor changes to forms LM–3 and LM–4, which are used by smaller labor organizations. All of these forms are prescribed by the Secretary of Labor to implement the Act and incorporated by reference in the applicable regulations.

Over the past 40 years, the functions and operations of unions have evolved while the forms used by unions to file annual financial reports required by the LMRDA have remained substantially unchanged. This has undermined the goal of the statute because the forms are insufficient to solicit information that is relevant in light of the financial complexity of modern unions. As noted previously, it is impossible for union members to evaluate in any meaningful way the management of their unions when the financial disclosure reports filed with OLMS simply report large expenditures (*e.g.*, $62 million) for broad, general categories like ''Grants to Joint Projects with State and Local Affiliates.'' The large dollar amount and vague description of such entries make it essentially impossible for anyone to

determine with any degree of specificity what their dues are spent on, which is precisely what the Act was intended to provide.

Today's union members, more than ever before, need relevant information provided in a usable format in order to make the decisions necessary to exercise their rights as members of democratic institutions. The Department is committed to maintaining accountability and promoting full and fair disclosure by labor organizations. Institutions, such as labor organizations, in which the public places its trust, should not be permitted to utilize technicalities of structure to avoid disclosure. Providing additional detail on form LM–2 and requiring disclosure on the new form T–1 of trusts in which the labor organization has an interest is necessary to give union members an accurate picture of their labor organization's finances.

The revision of form LM–2 is also necessary to improve its usefulness as a deterrent to financial fraud and mismanagement. OLMS case files repeatedly demonstrate that this goal of the Act is not being met. Over the past five years, OLMS investigations resulted in over 640 criminal convictions. As a remedy, the courts ordered the responsible officials to pay $15,446,896 in restitution, in addition to debarring them from union service for a combined total of almost ten thousand years. In many cases the broad aggregated categories on the existing forms enabled union officers to hide embezzlements and financial mismanagement. More detailed reporting of all financial transactions is likely to discourage and reduce corruption because it would be more difficult to hide financial mismanagement from members.

(2) Objectives of and Legal Basis for Rule

The legal authority for the notice of proposed rule-making is sections 201 and 208 of the LMRDA, 29 U.S.C. 431, 438. Section 201 requires labor organizations to file annual financial reports and to disclose certain financial information, including all assets, receipts, liabilities, and disbursements of the labor organization. Section 208 provides that the Secretary of Labor shall have authority to issue, amend, and rescind rules and regulations prescribing the form and publication of reports required to be filed under title II of the Act, including rules prescribing reports concerning trusts in which a labor organization is interested, and such other reasonable rules and regulations as she may find necessary to prevent the circumvention or evasion of the reporting requirements.

The objective of this proposal is to require that labor organizations that use form LM–2 file their annual financial reports electronically unless they obtain a hardship exemption and to update and revise the LMRDA disclosure forms to take advantage of modern technology and to increase the transparency of union financial reporting for labor organizations with annual receipts of $200,000 or more. This will enable workers to be responsible, informed, and effective participants in the governance of their unions; discourage embezzlement and financial mismanagement; prevent the circumvention or evasion of the statutory reporting requirements; and strengthen the effective and efficient enforcement of the Act by OLMS.

(3) Number of Small Entities Covered Under Rule

The primary impact of this notice of proposed rule-making will be on the largest labor organizations, defined as those that have $200,000 or more in annual receipts. There are approximately 5,514 labor organizations of this size that are required to file form LM–2 reports under the LMRDA. Smaller unions that file form LM–3 or LM–4 will be affected only by the requirement to file a form T–1 for certain trusts in which they have an interest. The Department estimates that 490 labor organizations that are permitted to use form LM–3 to file their annual financial report will file a form T–1 and that 25 labor organizations that are permitted to use form LM–4 to file their annual financial report will file a form T–1.

(4) Reporting, Recordkeeping and Other Compliance Requirements of the Rule

This proposed rule is not expected to have a significant economic impact on a substantial number of small entities. The LMRDA is primarily a reporting and disclosure statute. It establishes various reporting requirements for labor organizations, labor organization officers, employers, and employer consultants pursuant to title II of the Act. Accordingly, the primary economic impact of the proposed rule will be the cost to reporting unions of compiling, recording, and reporting additional information. The proposed rule establishes a new set of reporting categories for those labor organizations with receipts of $200,000 or more. In order to comply with the requirement that reports be filed electronically, reporting unions will be required to use software provided by OLMS. Reporting unions may also need to make adjustments in their bookkeeping procedures and, in some instances, to make changes in computing hardware or software. None of these expenses are expected to be substantial, in large part because labor organizations, like most small entities following standard business practices, already maintain records of their receipts and expenditures. Labor organizations may not now be estimating the percentage of time spent on various types of functions by officers and employees, as they will be required to do in order to complete the revised form LM–2. Although the estimation required is only a rough approximation, rounded to the nearest 10%, the Department has considered both the time that will be required to make this estimation, and additional training that may be necessary to do so, in calculating the burden that will likely be imposed by the use of the new form LM–2. Once the necessary adjustments have been made to existing accounting systems, the Department estimates that the average recordkeeping and reporting burden, and costs associated with such recordkeeping, will increase. See the following Paperwork Reduction Act section for greater detail. The changes may also have economic significance that is difficult to measure because increased transparency in union financial affairs will result in less embezzlement and financial mismanagement, and increased public trust.

(5) Relevant Federal Requirements Duplicating, Overlapping or Conflicting With the Rule

To the extent that there are federal rules that duplicate, overlap, or conflict with this proposed rule, a specific exemption from the requirements of this rule has been provided, with one exception. Labor organizations are currently required to report some similar information to the Internal Revenue Service on form 990 or form 990–EZ if they are exempt from taxation under 26 U.S.C. 501(c)(5). A copy of the labor organization's filed form LM–2 may currently be submitted in lieu of answering certain questions on form 990 or form 990–EZ. The Department anticipates that a similar arrangement will be possible with respect to the revised form LM–2. Aside from those areas of potential duplication mentioned in the notice of proposed rulemaking, there is no duplication of existing labor organization reporting requirements, nor is similar information required by any other federal agency or statute.

(6) Differing Compliance or Reporting Requirements for Small Entities

The reporting, recordkeeping, and other compliance requirements apply equally to all labor organizations that are required to file a form LM–2 under the LMRDA. The Department expects that only the largest labor organizations will have to make significant changes in the level of detail with which financial activity is reported in order to comply with the requirements of the proposed rule. Differences between the smaller labor organizations that are large enough to be required to file form LM–2 and the largest labor organizations are more likely to result from differences in the financial practices of the unions themselves. Only the largest filers, those that have annual receipts in the millions, are likely to have extensive financial transactions and will require substantial changes in their accounting practices in order to report these transactions on the new form. Unions with receipts of between $200,000 and $2 million, which account for over 4,400 of the 5,514 form LM–2 filers, are likely to have less difficulty using the revised form.

Smaller unions with total annual receipts of less than $200,000 (79.5 percent of all LMRDA covered unions) can still elect to file a simplified report. Over 49% of all labor organizations may file either a form LM–2 or a form LM–3, a form that entails a lesser recordkeeping and reporting burden than form LM–2. The only change to form LM–3 made by the proposed rule is the elimination of the requirement that the union filing such a form report the existence of a subsidiary. In addition, form LM–3 filers will now have to file a form T–1 reflecting expenditures and receipts of any trusts or other organizations in which they have an interest, if $10,000 or more is contributed to the trust or other organization on the reporting union's behalf during the reporting year, and if the trust has $200,000 or more in annual receipts. The very smallest unions, with total annual receipts of less than $10,000 (30.1 percent of all LMRDA covered unions), can elect to file an abbreviated report, form LM–4, which further reduces their recordkeeping and reporting burden. Although form LM–4 filers will also be required to file form T–1 for any significant trusts or other funds in which they have an interest, if $10,000 or more is contributed to the trust or other fund on the reporting union's behalf during the reporting year, the Department expects that the number of form LM–4 filers that will be required to file these forms will be extremely small.

(7) Clarification, Consolidation and Simplification of Compliance and Reporting Requirements for Small Entities

OLMS has developed an electronic labor organization reporting system (e.LORS) that utilizes electronic technology to collect, maintain, and disclose the information it collects. The objectives of e.LORS are: The electronic filing of forms LM–2, LM–3, and LM–4 via the Internet; LMRDA program enhancements to improve accuracy, completeness, and timeliness of forms LM–2, LM–3, and LM–4; and the public disclosure of reports with a searchable database via the Internet. Labor organizations are directed to use an electronic reporting format and are provided a CD–ROM disk by OLMS that will enable them to maintain financial information that can be electronically compiled in the proper format for electronic filing.

OLMS will provide compliance assistance for any questions or difficulties that may arise from using the software. A help desk is staffed during normal business hours and can be reached by calling a toll-free telephone number.

The use of electronic forms makes it possible to download information from previous filed reports directly into the form; enables officer and employee information to be imported onto the form; makes it easier to enter information; and automatically performs calculations and checks for typographical and mathematical errors and other discrepancies, which reduces the likelihood of having to file an amended report. The error summaries provided by the software, combined with the speed and ease of electronic filing, will also make it easier for both the reporting labor organization and OLMS to identify errors in both current and previously filed reports and to file amended reports to correct them.

(8) The Use of Performance Rather Than Design Standards

The Department considered a number of alternatives to the proposed rule that could minimize the impact on small entities. One alternative would be not to change the existing forms LM–2, LM–3, and LM–4. This alternative was rejected because OLMS case files demonstrate that the goals of the Act are not being met and that the broad aggregated reporting categories on the existing forms enable some union officers to hide embezzlements and financial mismanagement. As noted above, it is impossible to quantify the actual amount of money that unions and their members lost as a result of criminal activity that might have been prevented, or discovered sooner, if form LM–2 provided more useful information than it currently does. Nor is it possible to accurately quantify the cost of having less transparency and accountability to union members and the impact on union democracy and the economy.

Another alternative would be to limit the new reporting requirements to national and international parent labor organizations. However, the Department has concluded that such a limitation would eliminate the availability of meaningful information from local and intermediate labor organizations, which may have far greater impact on and relevance to union members, particularly since such lower levels of union organizations generally set and collect dues and provide representational and other services for their members. Such a limitation would reduce the utility of the information to a significant number of union members. Of the 5,514 labor organizations that are required to file form LM–2, just 141 are national and international labor organizations. Limiting the new reporting requirements to these 141 labor organizations would save the other form LM–2 filers approximately $14 million over three years. However, nearly all of the OLMS investigations cited above involve labor organizations other than the 141 that would be subject to the improved reporting requirements. Requiring only national and international organizations to file more detailed reports would not provide any deterrent to fraud and embezzlement by local and regional officials. The additional approximately $14 million cost over three years of applying the new reporting requirements to all unions with annual receipts of $200,000 or more should be offset by savings to union members as a result of this deterrent effect.

Another alternative could be to adjust the form LM–2 $200,000 filing threshold for inflation since it was last adjusted in 1994. This would increase the threshold to approximately $250,000 and exclude about 650 labor organizations from having to file the new form LM–2 (although they would still have to file a form LM–3). These 650 unions would save an annual average $293 in reporting and recordkeeping costs, or a total of nearly $190,000, by filing form LM–3 instead of the new form LM–2. The total difference in reporting and recordkeeping costs would be just 0.1 percent of their total annual revenue (assuming each union has $225,000 in

receipts). The Department has concluded that these relatively low cost-savings do not justify eliminating the availability of thorough financial information from these local labor organizations, which may have far greater impact on and relevance to union members, particularly given the typical role of such lower levels of union organizations in setting and collecting dues and providing representational and other services for their members. Because the current reporting threshold significantly reduces the reporting burden for smaller unions, no change in the threshold is proposed at this time. The existing $200,000 threshold exempts 79.5 percent of all labor organizations that file annual reports (forms LM–2, LM–3, and LM–4) from the requirement of filing the more detailed form LM–2. Moreover, the current $200,000 threshold is already higher than the 1959 ($20,000), 1962 ($30,000), and 1981 ($100,000) thresholds when those thresholds are adjusted for inflation. However, the Department requests public comments on what is the appropriate level of the dollar threshold for the largest unions that file form LM–2.

Another alternative would be to phase-in the effective date for the form LM–2 changes that would provide smaller form LM–2 filers with additional lead time to modify their recordkeeping systems to comply with the new reporting requirements. The Department has concluded that a one-year period for all form LM–2 filers to adapt to the new reporting requirements should provide sufficient time to make the necessary adjustments. OLMS also plans to provide compliance assistance to any labor organization that requests it. In addition, a review of the proposed revisions was undertaken to reduce paperwork burden for all form LM–2 filers and an effort was made during the review to identify ways to reduce the impact on small entities. The Department believes it has minimized the economic impact of the form revision on small unions to the extent possible while recognizing workers' and the Department's need for information to protect the rights of union members under the LMRDA.

Another alternative considered, and described in more detail above, was to retain the requirement that labor organizations report financial information for their subsidiaries, but redefine the term ''subsidiary'' in a broader manner more consistent with its use under other statutes. As explained above, this alternative was rejected, but comments have been requested concerning this alternative.

(9) Exemption From Coverage of the Rule for Small Entities

The current dollar threshold for form LM–2 excludes 79.5 percent of all labor organizations that file LMRDA annual reports with OLMS. As noted above, smaller unions with total annual receipts of less than $200,000, but more than $10,000, (49.4 percent of all LMRDA covered unions) can elect to file a simplified report (form LM–3) that would reduce their average recordkeeping and reporting burden by 69.6 percent, from 21.81 hours to 6.64 hours per respondent in the third year (even more the first two years the proposed form would be in effect). The very smallest unions with total annual receipts of less than $10,000 (30.1 percent of all LMRDA covered unions) can elect to file an abbreviated report (form LM–4) that reduces their recordkeeping and reporting burden by 95.9 percent, from 21.81 hours to 0.90 hours per respondent.

Paperwork Reduction Act

Summary: This proposed rule modifies the annual reports required to be filed by the largest labor organizations, prescribed by the Secretary of Labor to implement the Act and incorporated by reference in the applicable regulations. The revised paperwork requirements are necessary to enable workers to be responsible, informed, and effective participants in the governance of their unions; discourage embezzlement and financial mismanagement; prevent the circumvention or evasion of the statutory reporting requirements; and strengthen the effective and efficient enforcement of the Act by the Department.

Published at the end of this notice are four proposed forms and their instructions that will implement the new reporting requirements. One form is the revised form LM–2, one is the revised form LM–3, one is the revised form LM–4, and the other is a new form T–1 for unions to report the assets, receipts, liabilities, and disbursements of trusts in which a labor organization has an interest. The proposed revisions to form LM–2 are designed to take advantage of technology that makes it possible to increase the detail with which information required to be reported can be provided, while at the same time making it easier to file and publish the contents of the reports. Union members are thus able to obtain a more accurate picture of their union's financial condition and operations without imposing an unwarranted burden on reporting unions. Supporting documentation need not be submitted with the forms, but labor organizations are required to maintain, assemble, and produce such documentation in the event of an inquiry from a union member or an audit by an OLMS investigator.

The Department estimates the average reporting and recordkeeping burden for the revised form LM–2 to be 104.03 hours per respondent in the first year, 24.96 hours per respondent in the second year, and 21.81 hours per respondent in the third year. The Department estimates the average reporting and recordkeeping burden for the revised form LM–3 and revised form LM–4 to be 6.64 hours and 0.90 hours per respondent in all three years. The Department estimates the average reporting and recordkeeping burden for the new form T–1 to be 12.89 hours per respondent in the first year, 5.79 hours per respondent in the second year, and 5.15 hours per respondent in the third year. The Department estimates the annual cost to respondents for the revised form LM–2 to be $14.618 million in the first year, $3.281 million in the second year, and $2.867 million in the third year. The Department estimates the annual cost to respondents for the revised form LM–3 and form LM–4 to be $1.797 million and $180,903 in all three years. The Department estimates the annual cost to respondents for the new form T–1 to be $1.218 million in the first year, $518,427 in the second year, and $454,448 in the third year. The annualized federal cost associated with the revised form LM–2, LM–3, LM–4, and the new form T–1 is estimated to be $7.187 million.

Pursuant to the Paperwork Reduction Act of 1995, the information collection requirements contained in this NPRM have been submitted to the Office of Management and Budget for approval.

Background: Every labor organization whose total annual receipts are $200,000 or more and those organizations that are in trusteeship must file an annual financial report on form LM–2, Labor Organization Annual Report, within 90 days after the end of its fiscal year, to disclose its financial condition and operations for its preceding fiscal year. Form LM–2 is also used by labor organizations with total annual receipts of $200,000 or more that cease to exist to file a terminal report.

The current form LM–2 consists of 24 questions that identify the labor organization and provide basic information (in primarily a yes/no format); a statement of 11 financial items on different assets and liabilities;

a statement of receipts and disbursements; and 15 supporting schedules. The information that is reported includes: Whether the union has any subsidiary organizations; whether the union has a political action committee; whether the union discovered any loss or shortage of funds; the number of members; rates of dues and fees; the dollar amount for seven asset categories such as accounts receivable, cash, and investments; the dollar amount for four liability categories such as accounts payable and mortgages payable; the dollar amount for 16 categories of receipts such as dues and interest; and the dollar amount for 18 categories of disbursements such as payments to officers and repayment of loans obtained. Five of the supporting schedules include a detailed itemization of loans receivable and payable, the sale and purchase of investments and fixed assets, and payments to officers. There are also 10 supporting schedules for receipts and disbursements that provide union members with more detailed information by general groupings or bookkeeping categories to identify their purpose.

In 2001, 5,932 labor organizations filed form LM–2 and the Department estimates the recordkeeping and reporting burden to average 15.25 hours per respondent for a total of 82,564 hours and $1.784 million. In developing these estimates, the Department carefully considered the amount of time it takes to: (a) Read the reporting instructions; (b) gather books and records to complete the report; (c) organize the books and records to respond to various reporting requirements; (d) complete the form; and (e) check the responses. The recordkeeping requirements are minimal because the majority of financial books and records required to complete the reports are those that the reporting organizations maintain in the normal course of business and are, therefore, not factored into the burden hours. Moreover, any capital investment including computers and software that are usual and customary expenses incurred by persons in the normal course of their business are excluded from the regulatory definition of burden.

The Department's developed electronic reporting system, e.LORS, uses information technology to perform some of the administrative functions of the reporting system. The objectives of e.LORS are electronic filing of forms LM–2, LM–3, and LM–4, disclosure of reports via a searchable Internet database, improving the accuracy, completeness and timeliness of reports, and creating efficiency gains in the reporting system. Effective use of the system will reduce the burden on reporting organizations, provide increased information to union members, and enhance LMRDA enforcement by OLMS. The Department is working towards to integrating other LMRDA disclosure documents into e.LORS in the future. The OLMS Internet Disclosure site is available for public use. The site contains a copy of each labor organization's annual financial report as well as an indexed computer database on the information for each report that is searchable through the Internet.

To ease the transition to electronic disclosure, OLMS will include e.LORS information in its outreach program through the OLMS Help Desk and through formal group sessions conducted for union officials regarding compliance. The new and revised forms will be provided on CD–ROM discs at no cost to labor organizations. The electronic form will also be available from OLMS field offices and from the OLMS National Office. Unions will be required, however, to pay a minimal fee to obtain electronic signature capability for the two officers who sign the form. OLMS has implemented a system to permit union officers to sign electronically submitted forms with digital signatures. Information about this system can be obtained on the OLMS website at *http://www.dol.gov/esa/regs/compliance/olms/digital-signatures.htm.* Digital signatures ensure the authenticity of form LM–2 reports without compromising efficiency.

Filing labor organizations will find several advantages to electronic filing. With e.LORS, information from previously filed reports and officer or employee information can be directly imported to form LM–2. Not only is entry of the information eased, the software also makes mathematical calculations and checks for errors or discrepancies. The efficiency gains from electronic submission will alleviate much of the burden of revised form LM–2's new information requirements.

Ready acceptance of the benefits of electronic filing is predictable based on experience with software that OLMS has developed and distributed to labor organizations for completing the current forms LM–2, LM–3, and LM–4. Approximately 40% of unions that currently file form LM–2, LM–3, and LM–4 take advantage of the ability to enter data electronically on a computerized form. Enhancements of e.LORS will make it possible for all labor organizations to submit the new and revised forms electronically, although it is expected that some labor organizations will obtain hardship exemptions and file paper form LM–2 reports while they update their bookkeeping procedures.

Overview of Changes to Form LM–2

The updated form LM–2 includes: Three fewer questions (21 instead of 24) that identify the labor organization and provide basic information (in the same general yes/no format); the same 11 financial items on assets and liabilities; an updated statement of receipts and disbursements that asks for information on fewer categories of receipts (13 instead of 16) and disbursements (17 instead of 18); and seven additional supporting schedules (22 instead of 15). The updated statement of receipts and disbursements also drops seven old categories of disbursements and adds six new categories that will provide more useful information to union members on the amount of union funds spent on contract negotiation and administration, organizing, strike benefits, general overhead, political activities, and lobbying.

Many of the supporting schedules are not changing; over half (8) of the 15 current supporting schedules are either unchanged (7) or have been dropped from the updated form (1). Four of the current supporting schedules have only minor changes involving information that is maintained in the normal course of business. For example, on the schedule for itemizing investments the reporting threshold has changed from $1,000 and 20 percent of the total book value of the union's investments to $5,000 and 5 percent of the total. On the two schedules for disbursements to officers and employees the reporting of gross salary is changing to net salary and two new dollar amounts for direct taxes withheld and other withheld amounts have been added. On the fourth schedule that currently itemizes all benefit disbursements, the reporting of name, description, and amount has been expanded to include address, purpose, and date of the disbursement.

One important change to form LM–2 is the addition of three new separate schedules. The new schedules require the reporting of (1) the name of any entity or individual with which the labor organization had an account payable valued at $1,000 or more that was more than 90 days past due at the end of the reporting period or that was liquidated, reduced or written off during the reporting period; (2) the name of any entity or individual with which the labor organization had an account receivable valued at $1,000 or more that was more than 90 days past due at the

end of the reporting period or that was liquidated, reduced or written off during the reporting period; and (3) the number of union members by seven different membership categories. The Department believes that all of this reported information is maintained in the normal course of business. While labor organizations have not previously been required to report all of this information, the development of electronic software that will permit unions that keep their records electronically to import data from their programs to the form LM–2 software should reduce the burden of the revised reporting requirement. Labor organizations that do not currently maintain electronic books, or that use accounting software that proves incompatible with the software developed by the Department will experience modest increased burden. Another important change to form LM–2 is the individual identification of various receipts and disbursements for three of the current supporting schedules and five of the new supporting schedules. Currently, three of these supporting schedules provide some detail about various receipts and disbursements by general groupings or bookkeeping categories to identify their purpose. The updated form LM–2 will require these eight supporting schedules to individually identify receipts of $5,000 or more or total receipts from an entity or individual that aggregate to $5,000 or more during the reporting period, and disbursements of a certain amount ($2,000–$5,000) or total disbursements to an entity or individual that aggregate to a certain amount ($2,000–$5,000) during the reporting period.

The last major change to form LM–2 will require unions to report the major receipts and disbursements of trusts in which the labor organization has an interest. If a union's financial contribution to a trust, or a contribution made on the union's behalf, is less than $10,000, the union only has to report the existence of the trust and the amount of the union's contribution or the contribution made on the union's behalf. If the contribution is $10,000 or more, the labor organization will be required to report the receipts and disbursements of the trust on the proposed new form T–1. Unions will be required to separately identify each amount received by a trust from the same entity or individual of $10,000 or more during the reporting period, as well as receipts from the same entity or individual that aggregate to $10,000 or more during the reporting period. Unions will also be required to separately identify any individual disbursement of $10,000 or more during the reporting period, as well as any disbursements to the same entity or individual that aggregate to $10,000 or more during the reporting period. If annual audits or financial reports are already made available for organizations that meet the statutory definition of a trust, the only additional information that a union will be required to report on form LM–2 is a statement that such a report or audit has been filed or is available, and where union members can obtain the information.

Technological advances have made it possible to provide the level of detail necessary for union members to have a more accurate picture of their union's financial condition and operations without imposing an unwarranted burden on reporting unions. OLMS staff who review the reports filed and provide compliance assistance have found that a majority of unions required to file form LM–2 use computerized recordkeeping systems and have embraced the technology necessary to provide reports in electronic form. Several OLMS field offices report that even smaller unions that file form LM–3 reports keep electronic books. The development of electronic software that will permit unions that keep their records electronically to import data from their programs to the form LM–2 software should reduce the burden of reporting financial information with the specificity required by the proposed rule. While labor organizations have not previously been required to report all of this information, they have been required to make judgments regarding the appropriate characterization of expenditures in order to report those expenditures by category in the current form. Once the necessary adjustments have been made to electronic recordkeeping systems, no additional burden will be entailed by the need to make similar judgments with respect to fewer categories. Labor organizations that do not currently maintain electronic books, or that use accounting software that proves incompatible with the software developed by the Department, will experience an increased burden.

Finally, as noted previously, the instructions to form LM–2 adopt the recent holding of the U.S. Court of Appeals for the Ninth Circuit in *Chao* v. *Bremerton Metal Trades Council, AFL–CIO,* 294 F. 3d 1114 (2002), and clarify that any ''conference, general committee, joint, or system board, or joint council'' that is subordinate to a national or international labor organization is itself a labor organization under the LMRDA and will be required to file an annual financial form if the national or international labor organization is a labor organization engaged in an industry affecting commerce within the meaning of section 3(j) of the LMRDA.

Overview of Changes to Forms LM–3 and LM–4

Changes proposed to forms LM–3 and LM–4 involve a single question on each form, and the additional requirement of filing a form T–1 under certain circumstances. The proposed revision of form LM–3 is simply the elimination of a question whether the union has a subsidiary. The proposed revision of form LM–4 is simply the addition of a question whether the union has created or participated in the administration of a trust, as defined in the Instructions, during the reporting year. The form T–1 filing requirement is the same for form LM–3 and form LM–4 filers as it is for form LM–2 filers.

The instructions to both form LM–3 and LM–4 also adopt the recent holding of the U.S. Court of Appeals for the Ninth Circuit in *Chao* v. *Bremerton Metal Trades Council, AFL–CIO*, 294 F.3d 1114 (2002), and clarify that any ''conference, general committee, joint or system board, or joint council'' that is subordinate to a national or international labor organization is itself a labor organization under the LMRDA and will be required to file an annual financial form if the national or international labor organization is a labor organization engaged in an industry affecting commerce within the meaning of section 3(j) of the LMRDA.

Overview of the New Form T–1

The new form T–1 is structured similarly to the revised form LM–2. It includes: 21 questions that identify the trust, provide basic information (in a yes/no format), and the total amount of assets liabilities, receipts and disbursements of the trust; a schedule that separately identifies any individual or entity from which the trust receives $10,000 or more during the reporting year; a schedule that separately identifies any entity or individual that received disbursements that aggregate to $10,000 or more from the trust during the reporting period; a schedule of disbursements to officers and employees of the trust; and a schedule of loans receivable.

Estimated Recordkeeping and Reporting Burden: The burden hour estimates associated with forms LM–2, LM–3, LM–4, and T–1 are based on the latest available data and OLMS staff

estimates. In developing these estimates, the Department carefully considered the amount of time it takes to: (1) Read and review the new reporting instructions; (2) gather books and records to complete the report; (3) organize the books and records to respond to various reporting requirements; (4) complete the form; and (5) check the responses for each form. The Department has also allotted an average burden hour estimate associated with the first-year implementation of the electronic form LM–2 and the new form T–1 for each respondent. In developing this estimate, the Department accounted for the additional time in the first year to: (a) Install software; (b) test and review software; (c) implement electronic signatures; (d) modify current accounting systems; and (e) train employees. Although an OLMS survey of its district offices reveals that the large majority of form LM–2 respondents already keep their records electronically, the Department has allotted an average burden hour estimate associated with the first-year implementation of electronic recordkeeping and reporting.

As part of the ongoing e.LORS project, OLMS plans to develop and distribute to labor organizations software for form LM–2 that will electronically import data from their accounting systems into the form and then transmit it electronically to OLMS. The process will be similar to the popular off-the-shelf tax filing software packages that are widely used by businesses, accountants, and individuals. OLMS also plans to increase the staff available for its compliance assistance outreach efforts and to utilize its Help Desk and conferences to address any questions or difficulties filers may have using the software.

The on-going recordkeeping burden associated with both forms are minimal because most of the information and records that are required to complete the reports are maintained in the normal course of business by the reporting organizations. The time for normal recordkeeping functions are not factored into the burden hours except to estimate the time it would take an auditing clerk to make electronic entries regarding the reporting category for a disbursement and the source of non-dues receipts. Moreover, any capital investment that is a usual and customary expense incurred by persons in the normal course of their business, including computers and software, is excluded from the regulatory definition of burden.

Estimated Burden for Form LM–2: The Department estimates the time to complete form LM–2 will initially increase compared to previous years because of the implementation of the new reporting system. However, once the new reporting system is in place the Department anticipates that the burden will significantly decrease and will be marginally higher than the present estimated burden. The decrease in burden will be a direct consequence of the efficiencies gained using the OLMS electronic system for filing the forms.

The Department determined the burden hours by estimating the time required to complete each report and the recordkeeping hours associated with each report. First year burden hour and cost estimates are broken out separately from ongoing burden hour and cost estimates. *See* Table 2 below for a summary of the burden hour estimates associated with revised form LM–2.

The number of responses for revised form LM–2 is based on the number of forms submitted in calendar year 2001 by labor organizations that submitted form LM–2 and the latest available data. For the revised form LM–2, the Department estimates an initial increase in burden associated with installing, testing, and reviewing software, as well as adapting existing recordkeeping systems to the new reporting categories. There also is an increase in reporting burden for the additional information associated with individually identifying receipts and disbursements and training officers and employees. These increases are partially offset by the timesaving features of the software. In the first year, the Department estimates an average 104.03 hours of reporting burden per respondent and 1.0 hours of recordkeeping burden per respondent. As noted above, the Department assumes that the information required to be reported is already maintained by labor organizations in the normal course of business. The Department's estimate of the recordkeeping burden includes only minimal time for keeping records regarding the calculation of the percentage of officers' and employees' salaries attributable to specific categories, which may not ordinarily be reflected in records already maintained, because that calculation is based only on an estimate and need not be demonstrated by actual records of time spent in each category.

The reporting burden decreases in the second year and continues to decrease significantly in the third year because of the time saved from electronic filing. The Department estimates the average reporting burden to be 24.96 hours per respondent in the second year and 21.81 hours per respondent in the third year. The average recordkeeping burden remains at 1.0 hour per respondent in each year because most records required to complete the reports are maintained in the normal course of business.

The Department estimates that 5 percent of form LM–2 filers will submit a Continuing Hardship Exemption Request in the first year and that it will take 1 hour to prepare this request. The Department further estimates that 3 percent of form LM–2 filers will submit a hardship request in the second year and that 1 percent will submit a request in the third year.

The Department also estimates the annualized cost to respondents to be $14.618 million in the first year, $3.281 million in the second year, and $2.867 million in the third year. The average cost per respondent is estimated to be $2,651 in the first year, $595 in the second year, and $520 in the third year. The cost estimates are based on wage-rate data obtained from the Department's Bureau of Labor Statistics for personnel employed in service industries (*i.e.* accountant, bookkeeper, *etc.*). The estimates used for salaries of labor organization officers and employees are obtained from the annual financial reports filed with OLMS.

The annualized federal cost associated with revised forms LM–2, LM–3, and LM–4 and the new form T–1 is estimated to be $7.187 million. This includes operational expenses such as equipment, overhead, and printing as well as salaries and benefits for the OLMS staff in the National Office and field offices that are involved with reporting and disclosure activities. The estimate also includes the annualized cost for redesigning the forms, developing and implementing the electronic software, and implementing digital signature capability.

Estimated Burden for Forms LM–3 and LM–4: The Department estimates a small decrease in burden associated with the elimination of the question on form LM–3 regarding whether the union has a subsidiary. The Department also estimates a small increase in burden associated with the addition of a question on form LM–4 regarding whether the union has created or participated in the administration of a trust, as defined in the instructions, during the reporting year, both because answering this question will take little time and because unions that are small enough to file a form LM–4 are unlikely to have an interest in many trusts. *See* Table 2, below, for a summary.

Estimated Burden for Form T–1: Like form LM–2, the time to complete form T–1 will initially be higher for the first year compared to the second and third years because of the implementation of the new reporting system and electronic

filing. *See* Table 2 below for a summary of the burden hour estimates associated with the new form T–1.

For the new form T–1 five assumptions were made to estimate the number of responses. First, it was assumed that 10 percent of the 2,309 LM–2 filers with annual revenues of from $200,000 to $499,999 would file one form T–1. Second, it was assumed that 35 percent of the 3,162 form LM–2 filers with annual revenues of from $500,000 to $49.999 million would file an average of 2.3 form T–1s. Third, it was assumed that 100 percent of the 43 form LM–2 filers with annual revenues of $50 million or more would file an average of five T–1 reports each. Fourth, it was assumed that 90 percent of the 545 form LM–3 filers that report having a trust, and that 90 percent of the estimated 50 intermediate labor organizations that will file form LM–3 as a result of the recent decision of the U.S. Court Appeals for Ninth Circuit in *Chao* v. *Bremerton Metal Trades Council, AFL–CIO*, would have trusts that meet the $10,000 contribution and $200,000 annual receipt threshold reporting requirements. Finally, it was assumed that just 0.3 percent of form LM–4 filers would have trusts that meet the $10,000 contribution and $200,000 annual receipt threshold reporting requirements. Because labor organizations have not previously reported information regarding many entities that fall within the definition of trusts or funds in which they have an interest, it is difficult to estimate how many of such entities exist. Accordingly, the Department invites comment on these assumptions and the potential number of responses to the new form T–1.

For the new form T–1, the Department estimates a higher initial burden associated with installing, testing, and reviewing software, as well as adapting existing recordkeeping systems to the new reporting categories. There also is a reporting burden for the information associated with individually identifying receipts and disbursements of the trust. These burdens are partially offset by the timesaving features of the software. Finally, although a labor organization that is significantly involved in directing the operations of a trust or other fund in which it is interested is likely to maintain records regarding such a fund, other labor organizations may be required to obtain and maintain records that they have not previously kept. In the first year, the Department estimates an average 12.39 hours of reporting burden per respondent and 0.5 hours of recordkeeping burden per respondent.

The reporting burden decreases significantly in the second year and continues to decrease significantly in the third year because of the time saved from electronic filing. The Department estimates the average reporting to be 5.29 hours per respondent in the second year and 4.65 hours per respondent in the third year. The average recordkeeping burden remains at 0.5 hours per respondent in each year because most records required to complete the reports are maintained in the normal course of business.

TABLE 2.—REPORTING AND RECORDKEEPING BURDEN HOURS FOR FORM LM–2 AND FORM T–1

	Number of responses	Reporting hours per respondent	Total reporting hours	Recordkeeping hours per respondent	Total recordkeeping hours	Total burden hours
Revised Form LM–2:						
First Year	5,514	104.03	573,621	1.00	5,514	579,135
Second Year	5,514	24.96	137,629	1.00	5,514	143,143
Third Year	5,514	21.81	120,260	1.00	5,514	125,774
Revised Form LM–3:						
First Year	13,290	6.39	84,923	0.25	3,323	88,246
Second Year	13,290	6.39	84,923	0.25	3,323	88,246
Third Year	13,290	6.39	84,923	0.25	3,323	88,246
Revised Form LM–4:						
First Year	8,108	0.87	7,054	0.03	270	7,324
Second Year	8,108	0.87	7,054	0.03	270	7,324
Third Year	8,108	0.87	7,054	0.03	270	7,324
New Form T–1:						
First Year	3,551	12.39	43,997	0.50	1,776	45,772
Second Year	3,551	5.29	18,785	0.50	1,776	20,560
Third Year	3,551	4.65	16,512	0.50	1,776	18,288

Executive Order 13045 (Protection of Children From Environmental Health Risks and Safety Risks)

In accordance with Executive Order 13045, the Department has evaluated the environmental safety and health effects of the rule on children. The Department has determined that the final rule will have no effect on children.

Executive Order 13175 (Consultation and Coordination With Indian Tribal Governments)

The Department has reviewed this rule in accordance with Executive Order, and has determined that it does not have ''tribal implications.'' The rule does not ''have substantial direct effects on one or more Indian tribes, on the relationship between the Federal government and Indian tribes, or on the distribution of power and responsibilities between the Federal government and Indian tribes.''

Executive Order 12630 (Governmental Actions and Interference With Constitutionally Protected Property Rights)

This rule is not subject to Executive Order 12630, Governmental Actions and Interference with Constitutionally Protected Property Rights, because it does not involve implementation of a policy with takings implications.

Executive Order 12988 (Civil Justice Reform)

This regulation has been drafted and reviewed in accordance with Executive Order 12988, Civil Justice Reform, and will not unduly burden the Federal court system. The regulation has been written so as to minimize litigation and provide a clear legal standard for affected conduct, and has been reviewed carefully to eliminate drafting errors and ambiguities.

Environmental Impact Assessment

The Department has reviewed the final rule in accordance with the requirements of the National Environmental Policy Act (NEPA) of 1969 (42 U.S.C. 4321 *et seq.*), the regulations of the Council on Environmental Quality (40 U.S.C. part 1500), and the Department's NEPA procedures (29 CFR part 11). The final rule will not have a significant impact on the quality of the human environment, and, thus, the Department has not conducted an environmental assessment or an environmental impact statement.

Executive Order 13211 (Actions Concerning Regulations That Significantly Affect Energy Supply, Distribution, or Use)

This rule is not subject to Executive Order 13211, because it will not have a significant adverse effect on the supply, distribution, or use of energy.

List of Subjects in 29 CFR Parts 403 and 408

Labor unions, Reporting and recordkeeping requirements.

Text of Proposed Rule

In consideration of the foregoing, the Office of Labor-Management Standards, Employment Standards Administration, Department of Labor hereby proposes to amend parts 403 and 408 of title 29 of the Code of Federal Regulations as set forth below.

PART 403—LABOR ORGANIZATION ANNUAL FINANCIAL REPORTS

1. The authority citation for part 403 is revised to read as follows:

Authority: Secs. 202, 207, 208, 73 Stat. 525, 529 (29 U.S.C. 432, 437, 438); Secretary's Order No. 4–2001, 66 FR 29656, May 31, 2001.

2. Section 403.2 is amended by:

a. Removing the words ''together with a true copy thereof'' at the end of paragraph (a) and removing the comma preceding those words.

b. Adding paragraph (d) to read as follows:

§ 403.2 Annual financial report.

* * * * *

(d) Every labor organization shall, except as otherwise provided, file a report on form T–1 for every trust in which the labor organization is interested, as defined in section 3(l) of the Act, 29 U.S.C. 402(l), that has gross annual receipts of $200,000 or more, and to which $10,000 or more was contributed during the reporting period by the labor organization or on the labor organization's behalf or as a result of a negotiated agreement to which the labor organization is a party. A separate report shall be filed on form T–1 for each such trust within 90 days after the end of the trust's fiscal year in the detail required by the instructions accompanying the form and constituting a part thereof, and shall be signed by the president and treasurer, or corresponding principal officers, of the labor organization. No form T–1 need be filed for a trust if an annual audit or financial report providing the same information and a similar level of detail is otherwise available pursuant to federal or state law, as specified in the instructions accompanying form T–1. If, on the date for filing the annual financial report of such trust, such labor organization is in trusteeship, the labor organization that has assumed trusteeship over such subordinate labor organization shall file such report as provided in § 408.5 of this chapter.

3. Section 403.5 is amended by:

a. In paragraph (a), removing the words ''and one copy'' and removing the commas preceding and following those words.

b. In paragraph (b), removing the words ''and one copy'' and removing the commas preceding and following those words.

c. Adding a new paragraph (d) to read as follows:

§ 403.5 Terminal financial report.

* * * * *

(d) If a trust in which a labor organization is interested loses its identity through merger, consolidation, or otherwise, the labor organization shall, within 30 days after such loss, file a terminal report on form T–1, with the Office of Labor-Management Standards, signed by the president and treasurer or corresponding principal officers of the labor organization. For purposes of the report required by this paragraph, the period covered thereby shall be the portion of the trust's fiscal year ending on the effective date of the loss of its reporting identity.

PART 408—LABOR ORGANIZATION TRUSTEESHIP REPORTS

4. The authority citation for part 408 is revised to read as follows:

Authority: Secs. 202, 207, 208, 73 Stat. 525, 529 (29 U.S.C. 432, 437, 438); Secretary's Order No. 4–2001, 66 FR 29656, May 31, 2001.

§ 408.5 [Amended]

5. Section 408.5 is amended by:

a. Adding the words ''and any form T–1 reports'' after the words ''on behalf of the subordinate labor organization the annual financial report'' and before the words ''required by part 403 of this chapter''.

b. Removing the words ''together with one true copy thereof'' at the end of the section and removing the comma preceding those words.

Signed in Washington, DC, this 19th day of December, 2002.

Victoria A. Lipnic,

Assistant Secretary for Employment Standards.

Appendix

Note: This appendix, which will not appear in the Code of Federal Regulations, revises forms LM–2, LM–3, and LM–4, and proposes a new form T–1 and revises or provides instructions for each form, provided in part 403, to read as follows:

BILLING CODE 4510–CP–P

U.S. Department of Labor
Employment Standards Administration
Office of Labor-Management Standards
Washington, DC 20210

FORM LM-2 LABOR ORGANIZATION ANNUAL REPORT

MUST BE USED BY LABOR ORGANIZATIONS WITH $200,000 OR MORE IN TOTAL ANNUAL RECEIPTS AND LABOR ORGANIZATIONS IN TRUSTEESHIP

Form Approved
Office of Management and Budget
No. xxxxxxxx
Expires: xx-xx-xxxx

This report is mandatory under P.L. 86-257, as amended. Failure to comply may result in criminal prosecution, fines, or civil penalties as provided by 29 U.S.C. 439 or 440.

READ THE INSTRUCTIONS CAREFULLY BEFORE PREPARING THIS REPORT.

For Official Use Only

1. FILE NUMBER ___ – ___

2. PERIOD COVERED

	MO	DAY	YEAR
From			
Through			

3. (a) AMENDED - If this is an amended report correcting a previously filed report, check here: ☐
(b) HARDSHIP - If filing under the Hardship Exemption Procedures, check here: ☐
(c) TERMINAL - If your organization ceased to exist and this is its terminal report, see Section XII of the instructions and check here: ☐

IMPORTANT

Peel off the address label from the back of the package and place it here.

If the label information is correct, leave Items 4 through 8 blank.

If any of the label information is incorrect, complete Items 4 through 8.

4. AFFILIATION OR ORGANIZATION NAME

5. DESIGNATION (Local, *Lodge, etc.*)

6. DESIGNATION NUMBER

7. UNIT NAME *(if* any)

9. Are your organization's records kept at its mailing address? (if "No," provide address in Item 68.) Yes No

8. MAILING ADDRESS (Type or print in capital letters.)

First Name

Last Name

P.O. Box - Building and Room Number *(if any)*

Number and Street

City

State ZIP Code + 4

68. ADDITIONAL INFORMATION *(if more space is needed, attach additional pages properly identified.)*

Item Number

Each of the undersigned, duly authorized officers of the above labor organization, declares, under the applicable penalties of law, that all of the information submitted in this report (including the information contained in any accompanying documents) has been examined by the signatory and is, to the best of the undersigned's knowledge and belief, true, correct, and complete. (*See Section VI on penalties in the instructions.*)

69. SIGNED: _____ PRESIDENT *(If other title, see instructions.)*

___/___/___ Date ( ) - Telephone Number

70. SIGNED: _____ TREASURER *(If other title, see instructions.)*

___/___/___ Date ( ) - Telephone Number

FORM LM-2 LABOR ORGANIZATION ANNUAL REPORT

FILE NUMBER: ___ - ___

10. During the reporting period did the labor organization create or participate in the administration of a trust or other fund or organization, as defined in the instructions, which provides benefits for members or their beneficiaries? Yes No

11. During the reporting period did the labor organization have a political action committee (PAC) fund? Yes No

12. During the reporting period did the labor organization have an audit or review of its books and records by an outside accountant or by a parent body auditor/representative? Yes No

13. During the reporting period did the labor organization discover any loss or shortage of funds or other property? (Answer "Yes" even if there has been repayment or recovery.) Yes No

14. What is the maximum amount recoverable under the labor organization's fidelity bond for a loss caused by any officer, employee or agent of the labor organization who handled union funds? $

15. During the reporting period did the labor organization acquire or dispose of any goods or property in any manner other than by purchase or sale? Yes No

16. Were any of the labor organization's assets pledged as security or encumbered in any other way at the end of the reporting period? Yes No

17. Did the labor organization have any contingent liabilities at the end of the reporting period? Yes No

18. During the reporting period did the labor organization have any changes in its constitution and bylaws, other than rates of dues and fees, or in practices/procedures listed in the instructions? Yes No

19. What is the date of the labor organization's next regular election of officers?

20. How many members did the labor organization have at the end of the reporting period? (Total from Line 7 Column (B) in Schedule 13)

21. What are the labor organization's rates of dues and fees? (Enter a minimum and maximum if more than one rate applies for any line.)

Rates of Dues and Fees			
(a) Regular Dues/Fees	$	per	
(b) Initiation Fees	$		
(c) Transfer Fees	$		
(d) Work Permits	$	per	

If the answer to any of the above questions is "Yes," provide details in Item 68 (Additional Information) as explained in the instructions for each item.

STATEMENT A — ASSETS AND LIABILITIES

FILE NUMBER: ___ - ___

Complete Schedules 1 Through 22 Before Completing Statement A

Enter Amounts in Dollars Only - Do Not Enter Cents

Assets

ASSETS (Items)	From Schedule Number	Start of Reporting Period (A)	End of Reporting Period (B)
22. Cash			
23. Accounts Receivable			
24. Loans Receivable	2		
25. U.S. Treasury Securities			
26. Investments	5		
27. Fixed Assets	6		
28. Other Assets	7		
29. TOTAL ASSETS			

Liabilities

LIABILITIES (Items)	From Schedule Number	Start of Reporting Period (C)	End of Reporting Period (D)
30. Accounts Payable			
31. Loans Payable	9		
32. Mortgages Payable			
33. Other Liabilities	10		
34. TOTAL LIABILITIES			
35. NET ASSETS (Item 29 less Item 34)			

STATEMENT B — RECEIPTS AND DISBURSEMENTS

FILE NUMBER: ___ - ___

Complete Schedules 1 Through 22 Before Completing Statement B

Enter Amounts in Dollars Only - Do Not Enter Cents

Item	CASH RECEIPTS	SCH #	AMOUNT
36.	Dues and Other Payments	13	
37.	Per Capita Tax		
38.	Fees, Fines, Assessments, Work Permits		
39.	Sale of Supplies		
40.	Interest		
41.	Dividends		
42.	Rents		
43.	Sale of Investments and Fixed Assets	3	
44.	Loans Obtained	9	
45.	Repayments of Loans Made	2	
46.	On Behalf of Affiliates for Transmittal to Them		
47.	From Members for Disbursement on Their Behalf		
48.	Other Receipts	14	
49.	TOTAL RECEIPTS		

Item	CASH DISBURSEMENTS	SCH #	AMOUNT
50.	Contract Negotiation and Administration	15	
51.	Organizing	16	
52.	Political Activities	17	
53.	Lobbying	18	
54.	Contributions, Gifts, and Grants	19	
55.	Benefits	20	
56.	General Overhead	21	
57.	Other Disbursements	22	
58.	Per Capita Tax	13	
59.	Strike Benefits		
60.	Fees, Fines, Assessments, etc.		
61.	Supplies for Resale		
62.	Purchase of Investments and Fixed Assets	4	
63.	Loans Made	2	
64.	Repayment of Loans Obtained	9	
65.	To Affiliates of Funds Collected on Their Behalf		
66.	On Behalf of Individual Members		
67.	TOTAL DISBURSEMENTS		

SCHEDULE 1 — ACCOUNTS RECEIVABLE

FILE NUMBER: ___ - ___

	ENTITY OR INDIVIDUAL NAME (A)	TOTAL ACCOUNT RECEIVABLE (B)	90-180 DAYS PAST DUE (C)	180+ DAYS PAST DUE (D)	LIQUIDATED ACCOUNT RECEIVABLE (E)
1					
2					
3					
4					
5					
6					
7					
8					
9					
10					
11					
12					
13					
14					
15					
16					
17					
18					
19					
20					
21					
22					
23	Totals from additional pages				
24	Totals of lines 1-23				
25	Totals from all other accounts receivable				
26	Totals of lines 24 and 25				

SCHEDULE 2 — LOANS RECEIVABLE

FILE NUMBER: ☐☐☐ – ☐☐☐

Enter Amounts in Dollars Only - Do Not Enter Cents

List below loans to officers, employees, or members which at any time during the reporting period exceeded $250 and list all loans to business enterprises regardless of amount. (A)	Loans Outstanding at Start of Period (B)	Loans Made During Period (C)	Repayments Received During Period		Loans Outstanding at End of Period (E)
			Cash (D)(1)	Other Than Cash (D)(2)	
1. Name: _____ Purpose: _____ Security: _____ Terms of Repayment: _____					
2. Name: _____ Purpose: _____ Security: _____ Terms of Repayment: _____					
3. Name: _____ Purpose: _____ Security: _____ Terms of Repayment: _____					
4. Totals from additional pages (if any)					
5. Totals of loans not listed above					
6. Totals of Lines 1 through 5					

Enter the Totals from Line 6 in ..... Item 24 Column (A) ..... Item 63 ..... Item 45 ..... Item 68 with Explanation ..... Item 24 Column (B)

FILE NUMBER: ___ - ___

SCHEDULE 3 — SALE OF INVESTMENTS AND FIXED ASSETS

Description *(if land or buildings, give location)* (A)	Cost (B)	Book Value (C)	Gross Sales Price (D)	Amount Received (E)
1.				
2.				
3.				
4.				
5.				
6.				
7.				
8.				
9.				
10.				
11.				
12. Totals from additional pages *(if any)*				
13. Totals of Lines 1 through 12				
		14. Less Reinvestments		
		15. Net Sales		

Enter the Total from Line 15 in ---------- Item 43

SCHEDULE 4 — PURCHASE OF INVESTMENTS AND FIXED ASSETS

FILE NUMBER: ___ - ___

Description *(if land or buildings, give location)* (A)	Cost (B)	Book Value (C)	Cash Paid (D)
1.			
2.			
3.			
4.			
5.			
6.			
7.			
8.			
9.			
10.			
11.			
12. Totals from additional pages *(if any)*			
13. Totals of Lines 1 through 12			

14. Less Reinvestments	
15. Net Purchases	

Enter the Total from Line 15 in ..... Item 62

FILE NUMBER: ☐☐☐ – ☐☐☐

SCHEDULE 5 — INVESTMENTS
(OTHER THAN U.S. TREASURY SECURITIES)

Description (A)	Amount (B)
Marketable Securities	
1. Total Cost	
2. Total Book Value	
3. List each marketable security which has a book value over $5,000 and exceeds 5% of Line 2.	
(a)	
(b)	
(c)	
(d) Total from additional pages (if any)	
Other Investments	
4. Total Cost	
5. Total Book Value	
6. List each other investment which has a book value over $5,000 and exceeds 5% of Line 5. Also list each subsidiary which is an investment.	
(a)	
(b)	
(c)	
(d)	
(e) Total from additional pages (if any)	
7. Total of Lines 2 and 5	

Enter the Total from Line 7 in ..... Item 26, Column (B)

FILE NUMBER: ___ - ___

SCHEDULE 6 — FIXED ASSETS

Description (A)	Cost or Other Basis (B)	Total Depreciation or Amount Expensed (C)	Book Value (D)	Value (E)
1. Land (give *location):*				
2. Totals from additional pages *(if any)*				
3. Buildings (give *location):*				
4. Totals from additional pages *(if any)*				
5. Automobiles and Other Vehicles				
6. Office Furniture and Equipment				
7. Other Fixed Assets				
8. Totals of Lines 1 through 7				

Enter the Total from Line 8, Column (D) in ..... Item 27, Column (B)

FILE NUMBER: ___ - ___

SCHEDULE 7— OTHER ASSETS

Description (A)	Book Value (B)
1.	
2.	
3.	
4.	
5.	
6.	
7.	
8.	
9.	
10.	
11.	
12.	
13.	
14.. Total of Lines 1 through 13	

Enter the Total from Line 14 in ---------- Item 28, Column (B)

SCHEDULE 8 — ACCOUNTS PAYABLE

FILE NUMBER: ___ - ___

	ENTITY OR INDIVIDUAL NAME (A)	TOTAL ACCOUNT PAYABLE (B)	90-180 DAYS PAST DUE (C)	180+ DAYS PAST DUE (D)	LIQUIDATED ACCOUNT PAYABLE (E)
1					
2					
3					
4					
5					
6					
7					
8					
9					
10					
11					
12					
13					
14					
15					
16					
17					
18					
19					
20					
21					
22					
23	Totals from additional pages				
24	Totals of lines 1-23				
25	Totals from all other accounts payable				
26	Totals of lines 24 and 25				

FILE NUMBER: ☐☐☐ – ☐☐☐

SCHEDULE 9 — LOANS PAYABLE

Source of Loans Payable at Any Time During the Reporting Period (A)	Loans Owed at Start of Period (B)	Loans Obtained During Period (C)	Repayment Made During Period		Loans Owed at End of Period (E)
			Cash (D)(1)	Other Than Cash (D)(2)	
1.					
2.					
3.					
4.					
5.					
6.					
7.					
8.					
9.					
10.					
11.					
12. Totals from additional pages *(if any)*					
13. Totals of Lines 1 through 12					

Enter the Totals from Line 13 in ..... Item 31 Column (C) ..... Item 44 ..... Item 64 ..... Item 68 with Explanation ..... Item 31 Column (D)

FILE NUMBER: [ ][ ][ ] – [ ][ ][ ]

SCHEDULE 10 — OTHER LIABILITIES

Description (A)	Amount at End of Period (B)
1.	
2.	
3.	
4.	
5.	
6.	
7.	
8.	
9.	
10.	
11.	
12.	
13. Total from additional pages (if any)	
14. Total of Lines 1 through 13	

Enter the Total from Line 14 in ---------- Item 33, Column (D)

SCHEDULE 11— ALL OFFICERS AND DISBURSEMENTS TO OFFICERS

FILE NUMBER: ___ - ___

Total from Line 6 Column (J) on all additional pages (if any)	

	(A)* Name	(B)* Title	(C)* Code	(D) Net Salary Disbursements	(E) Withholding and Direct Payroll Taxes Disbursed	(F) Disbursements for Other Withheld Amounts	(G) Allowances Disbursed	(H) Disbursements for Official Business	(I) Other Disbursements not reported in (D through H)	(J) TOTAL
1	A*									
	B*									
	C*									
	K*	SCH 15	SCH 16	SCH 17	SCH 18	SCH 19	SCH 20	SCH 21	SCH 22	
2	A*									
	B*									
	C*									
	K*	SCH 15	SCH 16	SCH 17	SCH 18	SCH 19	SCH 20	SCH 21	SCH 22	
3	A*									
	B*									
	C*									
	K*	SCH 15	SCH 16	SCH 17	SCH 18	SCH 19	SCH 20	SCH 21	SCH 22	
4	A*									
	B*									
	C*									
	K*	SCH 15	SCH 16	SCH 17	SCH 18	SCH 19	SCH 20	SCH 21	SCH 22	
5	A*									
	B*									
	C*									
	K*	SCH 15	SCH 16	SCH 17	SCH 18	SCH 19	SCH 20	SCH 21	SCH 22	
	6. Total Disbursements (Total of Lines 1 through 5)									

*(A) Enter the name in the following format: **Last Name, First Name Middle Initial.** List all persons who held office during the reporting period even if they received no salary or other disbursements.
*(B) Enter officer title e.g. PRESIDENT or TREASURER.
*(C) Code for Status: **past officer - P; continuing officer - C; new officer during the reporting period - N.** (If any officer was not elected at a regular election in accordance with the labor organization's constitution and bylaws, explain in Item 68.)
*(K) Enter the PERCENTAGE (%) of time officer worked on activities covered in the corresponding Schedules 15-22.

SCHEDULE 12— DISBURSEMENTS TO EMPLOYEES

FILE NUMBER: ___ - ___

Total from Line 6 Column (J) on all additional pages (if any)	

	(A)* Name	(B)* Title	(C)* Code	(D) Net Salary Disbursements	(E) Withholding and Direct Payroll Taxes Disbursed	(F) Disbursements for Other Withheld Amounts	(G) Allowances Disbursed	(H) Disbursements for Official Business	(I) Other Disbursements not reported in (D through H)	(J) TOTAL
1	A*									
	B*									
	C*									
	K*	SCH 15	SCH 16	SCH 17	SCH 18	SCH 19	SCH 20	SCH 21	SCH 22	
2	A*									
	B*									
	C*									
	K*	SCH 15	SCH 16	SCH 17	SCH 18	SCH 19	SCH 20	SCH 21	SCH 22	
3	A*									
	B*									
	C*									
	K*	SCH 15	SCH 16	SCH 17	SCH 18	SCH 19	SCH 20	SCH 21	SCH 22	
4	A*									
	B*									
	C*									
	K*	SCH 15	SCH 16	SCH 17	SCH 18	SCH 19	SCH 20	SCH 21	SCH 22	
5	A*									
	B*									
	C*									
	K*	SCH 15	SCH 16	SCH 17	SCH 18	SCH 19	SCH 20	SCH 21	SCH 22	
	6. Total Disbursements (Total of Lines 1 through 5)									

*(A) Enter the name in the following format: **Last Name, First Name Middle Initial.** List all persons who received more than $10,000 in total disbursements from the reporting labor organization or from a total combination from the reporting labor organization and any affiliate and/or trust.
*(B) Enter employee's job title. (e.g. ACCOUNTANT or LOBBYIST)
*(C) List the affiliate and/or trust, if appropriate. (Make an additional entry for each entity as needed.)
*(K) Enter the PERCENTAGE (%) of time officer worked on activities covered in the corresponding Schedules 15-22.

FILE NUMBER: ☐☐☐ – ☐☐☐

SCHEDULE 13 — MEMBERSHIP STATUS, DUES AND PER CAPITA TAX INFORMATION

CATEGORY OF MEMBERSHIP (A)	NUMBER (B)	VOTING ELIGIBILITY (C)
1. Active Members		
2. Inactive Members		
3. Associate Members		
4. Apprentice Members		
5. Retired Members		
6. Other Members		
7. Members *		
8. Agency Fee Payers **		
9. Total Members/Fee Payers ***		
	Enter the Total from Line 7 in Item 20	

*Total of Lines 1 through 6
**Agency Fee Payers are not consider members of the labor organization.
***Total of Lines 7 and 8

DETAILED SUMMARY PAGE — SCHEDULES 14 THROUGH 22

FILE NUMBER: ___ - ___

Complete Schedules 14 through 22 Before Completing Summary Schedules

SCHEDULE 14 OTHER RECEIPTS	1. Itemized Receipts		
	2. Non-itemized Receipts		
	3. TOTAL RECEIPTS (add Lines 1 and 2)		**Item 48**
SCHEDULE 15 CONTRACT NEGOTIATION AND ADMINISTRATION	1. Itemized Disbursements		
	2. Non-itemized Disbursements		
	3. TOTAL DISBURSEMENTS (add Lines 1 and 2)		**Item 50**
SCHEDULE 16 ORGANIZING	1. Itemized Disbursements		
	2. Non-itemized Disbursements		
	3. TOTAL DISBURSEMENTS (add Lines 1 and 2)		**Item 51**
SCHEDULE 17 POLITICAL ACTIVITIES	1. Itemized Disbursements		
	2. Non-itemized Disbursements		
	3. TOTAL DISBURSEMENTS (add Lines 1 and 2)		**Item 52**
SCHEDULE 18 LOBBYING	1. Itemized Disbursements		
	2. Non-itemized Disbursements		
	3. TOTAL DISBURSEMENTS (add Lines 1 and 2)		**Item 63**

SCHEDULE 19 CONTRIBUTIONS, GIFTS, AND GRANTS	1. Itemized Disbursements		
	2. Non-itemized Disbursements		
	3. TOTAL DISBURSEMENTS (add Lines 1 and 2)		**Item 54**
SCHEDULE 20 BENEFITS	1. Itemized Disbursements		
	2. Non-itemized Disbursements		
	3. TOTAL DISBURSEMENTS (add Lines 1 and 2)		**Item 55**
SCHEDULE 21 GENERAL OVERHEAD	1. Itemized Disbursements		
	2. Non-itemized Disbursements		
	3. TOTAL DISBURSEMENTS (add Lines 1 and 2)		**Item 56**
SCHEDULE 22 OTHER DISBURSEMENTS	1. Itemized Disbursements		
	2. Non-itemized Disbursements		
	3. TOTAL DISBURSEMENTS (add Lines 1 and 2)		**Item 57**

FILE NUMBER: ☐☐☐ – ☐☐☐

ITEMIZATION PAGES FOR RECEIPTS/DISBURSEMENTS SCHEDULES 14-22

Schedule	Page Number	Total Number of Additional Pages

Complete Itemization Schedules First

Enter Amounts in Dollars Only - Do Not Enter Cents

NAME AND ADDRESS (A)	DESCRIPTION (B)	PURPOSE (C)	DATE (D)	AMOUNT (E)

SUBTOTAL (CURRENT PAGE ONLY)	
TOTAL (ALL PAGES)	

Form LM-2 (Revised 2002)

Public reporting burden for this collection of information is estimated to average 105 hours 32 minutes per response in the first year, 26 hours 17 minutes per response in the second year, and 23 hours 6 minutes per response in the third year. This includes the time for reviewing instructions, searching existing data sources, gathering and maintaining data needed, and completing and reviewing the collection of information. Persons are not required to respond to the collection of information unless it displays a currently valid OMB control number. Reporting of this information is mandatory and is required by the Labor-Management Reporting and Disclosure Act of 1959, as amended, for the purpose of public disclosure. As this is public information, there are no assurances of confidentiality. If you have any comments regarding this estimate or any other aspect of this information collection, including suggestions for reducing this burden, please send them to the U.S. Department of Labor, Employment Standards Administration, Office of Labor-Management Standards, Division of Interpretations and Standards, Room N-5605, 200 Constitution Avenue, NW, Washington, DC 20210.

INSTRUCTIONS FOR FORM LM-2 LABOR ORGANIZATION ANNUAL REPORT

Proposed Instructions

GENERAL INSTRUCTIONS

I. WHO MUST FILE

Every labor organization subject to the Labor-Management Reporting and Disclosure Act, as amended (LMRDA), the Civil Service Reform Act (CSRA), or the Foreign Service Act (FSA) must file a financial report, Form LM-2, LM-3, or LM-4, each year with the Office of Labor-Management Standards (OLMS) of the U.S. Department of Labor's (Department) Employment Standards Administration. These laws cover labor organizations that represent employees who work in private industry, employees of the U.S. Postal Service, and most Federal government employees. Labor organizations that represent only state, county, or municipal government employees are not covered by these laws and, therefore, are not required to file, except that any "conference, general committee, joint or system board, or joint council" that is subordinate to a national or international labor organization is a labor organization under the LMRDA and is required to file a financial report if the national or international labor organization is a labor organization engaged in an industry affecting commerce within the meaning of section 3(j) of the LMRDA If you have a question about whether the labor organization is required to file, contact the nearest OLMS field office listed on page XX of these instructions.

II. WHAT FORM TO FILE

Every labor organization subject to the LMRDA, CSRA, or FSA with total annual receipts of $200,000 or more must file Form LM-2. The term "total annual receipts" means all financial receipts of the labor organization during its fiscal year, regardless of the source, including receipts of any special funds as described in Section VIII (Funds To Be Reported) of these instructions. Funds of a trust in which the labor organization is interested should not be included in the total annual receipts considered when determining which form to file.

Labor organizations with total annual receipts of less than $200,000 may file the simplified 4-page annual report Form LM-3, if not in trusteeship as defined in Section IX (Labor Organizations In Trusteeship) of these instructions. Labor organizations with total annual receipts of less than $10,000 may file the abbreviated 2-page annual report Form LM-4, if not in trusteeship.

NOTE: *Certain labor organizations are required to file Form 990, Return of Organization Exempt from Income Tax,*

with the Internal Revenue Service (IRS). The IRS has accepted a copy of the labor organization's Form LM-2 in the past to provide some of the information required by Form 990. See the instructions for the current Form 990 for details. Filing Form LM-2 with the IRS does not satisfy the labor organization's reporting requirement with the U.S. Department of Labor.

III. When to File

Form LM-2 must be filed within 90 days after the end of the labor organization's fiscal year (12-month reporting period). The law does not authorize the U.S. Department of Labor to grant an extension of time for filing reports. The penalties for delinquency are described in Section VI (Officer Responsibilities And Penalties) of these instructions.

If the labor organization went out of existence during its fiscal year, a terminal financial report must be filed within 30 days after the date it ceased to exist. See Section XII (Labor Organizations Which Have Ceased to Exist) of these instructions for information on filing a terminal financial report.

IV. How to File

Form LM-2 (and Form T-1 Trusts Annual Report) must be prepared using software obtained from the Department and submitted electronically to the Department. A Form LM-2 and T-1 filer will be able to file a report in paper format only if it asserts a temporary hardship exemption or applies for and is granted a one-year hardship exemption. Forms LM-3 and LM-4 may be prepared and submitted electronically but it is not required.

A detailed user manual for the electronic filing software is included on the CD-ROM accompanying the report package.

HARDSHIP EXEMPTIONS

A labor organization that must file Form LM-2 or T-1 may assert a temporary hardship exemption or apply for a continuing hardship exemption to prepare and submit the report in paper format. If a labor organization files both Form LM-2 and Form T-1, the exemption must be asserted for each report, although in appropriate circumstances the same reasons may be used to support both exemptions. If it is possible to file Form LM-2, or one or more Form T-1s electronically, no exemption should be claimed for those reports, even though an exemption is warranted for a related report.

TEMPORARY HARDSHIP EXEMPTION:

If the labor organization experiences unanticipated technical difficulties that prevent the timely preparation and submission of an electronic filing, you may file Forms LM-2 or T-1 in paper format by the required due date. An electronic format copy of the filed paper format document shall be submitted to the Department within ten business days. Indicate in Item 3 (Amended, Hardship Exempted, or Terminal Report) that the labor organization is filing under the hardship exemption procedures. Unanticipated technical difficulties that may result in additional delays should be brought to the attention of the nearest OLMS field office listed on page XX of these instructions.

Note: *If either the paper filing or the electronic filing is not received in the timeframe specified above, the report will be considered delinquent.*

CONTINUING HARDSHIP EXEMPTION:

(a) The labor organization may apply in writing for a continuing hardship exemption if Forms LM-2 or T-1 cannot be filed electronically without undue burden or expense. Such written application shall be received at least thirty days prior to the required due date of the report(s). The

written application shall contain the information set forth in paragraph (b).

The application must be mailed to the following address:

U.S. Department of Labor
Employment Standards Administration
Office of Labor-Management Standards
200 Constitution Avenue, N.W.
Room N-5605
Washington, DC 20210-0001

Questions regarding the application should be directed to the OLMS Division of Interpretations and Standards, which can be reached at the above address, by email at olms-mail@dol-esa.gov, by phone at 202-693-0123, or by fax at 202-693-1340.

(b) The request for the continuing hardship exemption shall include, but not be limited to, the following: (1) the justification for the requested time period of the exemption; (2) the burden and expense that the union would incur if it was required to make an electronic submission; and (3) the reasons for not submitting the report(s) electronically. The applicant must specify a time period not to exceed one year.

(c) The continuing hardship exemption shall not be deemed granted until the Department notifies the applicant in writing. If the Department denies the application for an exemption, the labor organization shall file the report(s) in electronic format by the required due date. If the Department determines that the grant of the exemption is appropriate and consistent with the public interest and the protection of union members and so notifies the applicant, the labor organization shall follow the procedures set forth in paragraph (d).

(d) If the request is granted, the labor organization shall submit the report(s) in paper format by the required due date. The filer may be required to submit Form LM-2 or T-1 in electronic format upon the expiration of the period for which the exemption is granted. Indicate in Item 3 (Amended, Hardship Exempted, or Terminal Report) that the labor organization is filing under the hardship exemption procedures.

Note: *If either the paper filing or the electronic filing is not received in the timeframe specified above, the report will be considered delinquent.*

SPECIAL INSTRUCTIONS FOR SUBMITTING THE FORM LM-2 AND T-1 IN PAPER FORMAT:

Those labor organizations that are granted an exemption will be provided with a report package in paper format, which must be completed and filed at the following address:

U.S. Department of Labor
Employment Standards Administration
Office of Labor-Management Standards
200 Constitution Avenue, N.W.
Room N-5616
Washington, DC 20210-0001

Number of Copies

Complete one of the two blank copies included in the report package; do not use a photocopy of the form. The completed report must be filed with OLMS. A copy should also be maintained in the labor organization's records.

Address Label

If the report package was mailed to the labor organization with an address label, peel off the label and place it in the designated box on page 1 of the form. Use the preprinted label even if the information on it is incorrect. If any of the information on the label is incorrect, complete Items 4 through 8 in their entirety.

The labor organization's file number is the 6-digit number on the first line of the label. If the labor organization does not have a

label and the number cannot be obtained from prior reports filed with the Department, the number can be obtained from the OLMS website at www.union-reports.dol.gov or by contacting the nearest OLMS field office listed on page XX of these instructions. The labor organization's 6-digit file number must also be entered in the File Number boxes at the top of pages 2 through XX of Form LM-2.

If the report package does not have a correct address label, complete Items 4 through 8 in their entirety. If the label information is correct, leave Items 4 through 8 blank.

Information Entry

Entries on the report should be typed or clearly printed in black ink. Do not use a pencil or any other color ink.

For items displaying separate boxes, enter only one letter or number in each box as illustrated below. Use all capital letters and print or type inside the boxes. Leave a blank box between words and/or numbers as appropriate. Print clearly so the information can be accurately scanned.

Entering Number and Street:

1404 REDWOOD COURT

In all Items and Schedules dealing with monetary values report amounts in dollars only. Do not enter cents. Round cents to the nearest dollar. Enter a single "0" in the boxes for reporting dollars if the labor organization has nothing to report.

Entering Dollars:

$1,573,844 – do not enter cents

Entering Zero:

$ _ , _ _ _ , _ _ 0

For items requiring a "Yes" or "No" answer, enter an "X" in the appropriate box. Do not use check marks or other marks.

Entering X:

Yes	No
X	

Schedules 1 Through 22 Continuation Pages

If there is not enough space to report all the required information and amounts in Schedules 1 through 10, duplicate the blank schedule or use separate letter-size pages (8½" x 11") to report the additional information and attach them to the report. Be sure to use the same format as the schedule (that is, the same line and column headings) for any attached pages.

For Schedules 11 and 12, two copies of a preprinted continuation page are included in the report package. More copies of these schedules may be ordered from any OLMS office. For Schedules 13 through 22, twenty copies of a generic preprinted continuation page are included in the report package. The Schedules 11 through 22 continuation pages must be used if additional space is needed to report all required information and amounts in these schedules. More copies of these schedules may be ordered from any OLMS office.

Each attached page should identify the schedule to which it applies. Print clearly in the space provided at the top of the page, enter the name of the labor organization, its 6-digit file number as reported in Item 1 (File Number), the ending date of the reporting period as reported on the second line of Item 2 (Period Covered), the page number for each continuation page, and the total number of additional pages attached. Totals from any additional pages must be entered on the line provided in each schedule.

Additional Pages

Some of the items on the report require that further details be provided in Item 68 (Additional Information). If there is not enough space in Item 68, enter the additional information on a separate letter-size page(s), giving the number of the item to which the information applies. Print clearly at the top of each attached page the name of the labor organization, its 6-digit file number as reported in Item 1 (File Number), and the ending date of the reporting period as reported on the second line of Item 2 (Period Covered), the page number for each attachment page and the total number of additional pages attached.

V. Public Disclosure

The LMRDA requires that the Department make labor organization financial reports available for inspection by the public. Reports may be viewed and downloaded from the OLMS website at www.union-reports.dol.gov. Copies of reports and union constitutions and bylaws can also be ordered at the same website. Reports may also be examined and copies purchased at the OLMS Public Disclosure Room at the above address in Section IV (How To File) or at the OLMS field office in whose jurisdiction the reporting organization is located. See page XX of these instructions for a list of OLMS field offices.

VI. Officer Responsibilities and Penalties

The president and treasurer or the corresponding principal officers of the labor organization required to sign Form LM-2 are personally responsible for its filing and accuracy. Under the LMRDA, officers are subject to criminal penalties for willful failure to file a required report and for false reporting. False reporting includes making any false statement or misrepresentation of a material fact while knowing it to be false, or for knowingly failing to disclose a material fact in a required report or in the information required to be contained in it or in any information required to be submitted with it. Under the CSRA and FSA and implementing regulations, false reporting and failure to report may result in administrative enforcement action and litigation. The officers responsible for signing Form LM-2 are also subject to criminal penalties for false reporting under Section 1001 of Title 18 of the United States Code.

The reporting labor organization and the officers required to sign Form LM-2 are also subject to civil prosecution for violations of the filing requirements. According to Section 210 of the LMRDA (29 U.S.C. 440), "whenever it shall appear that any person has violated or is about to violate any of the provisions of this title, the Secretary may bring a civil action for such relief (including injunctions) as may be appropriate."

VII. Recordkeeping

The officers required to file Form LM-2 are responsible for maintaining records that will provide in sufficient detail the information and data necessary to verify the accuracy and completeness of the report. The records must be kept for at least 5 years after the date the report is filed. Any record necessary to verify, explain or clarify the report must be retained, including, but not limited to, vouchers, worksheets, receipts, applicable resolutions, and any electronic documents used to complete and file the report.

VIII. Funds To Be Reported

The labor organization must report financial information on Form LM-2 for all funds of the labor organization. Include any special purpose funds or accounts, such as strike funds, vacation funds, and scholarship funds even if they are not part of the labor organization's general treasury.

The labor organization is required to

report information about any trust in which it is interested on the Form T-1. See Sections X (Trusts In Which A Labor Organization Is Interested).

SPECIAL INSTRUCTIONS FOR CERTAIN ORGANIZATIONS

IX. Labor Organizations in Trusteeship

Any labor organization that has placed a subordinate labor organization in trusteeship is responsible for filing the subordinate's annual financial report. A trusteeship is defined in section 3(h) of the LMRDA (29 U.S.C. 402) as "any receivership, trusteeship, or other method of supervision or control whereby a labor organization suspends the autonomy otherwise available to a subordinate body under its constitution or bylaws."

Annual financial reports filed for any labor organization in trusteeship must be filed on Form LM-2. The report must be signed by the president and treasurer or corresponding principal officers of the labor organization that imposed the trusteeship and by the trustees of the subordinate labor organization. Trustees must sign and date Form LM-2 in the space below the officers' signatures and telephone numbers in Items 71 and 72 (Signatures).

X. Trusts In Which A Labor Organization Is Interested

The labor organization must disclose assets, liabilities, receipts, and disbursements of a significant trust in which the labor organization is interested.

A trust in which a labor organization is interested is defined by statute as

> ...a trust or other fund or organization (1) which was created or established by a labor organization, or one or more of the trustees or one or more members of the governing body of which is selected or appointed by a labor organization, and (2) a primary purpose of which is to provide benefits for the members of such labor organization or their beneficiaries.

29 U.S.C. 402(l). The definition of a trust in which a labor organization is interested may include, but is not limited to, joint funds administered by a union and an employer pursuant to a collective bargaining agreement, educational or training institutions, banks or credit unions created for the benefit of union members, and redevelopment or investment groups established by the union for the benefit of its members. The determination whether a particular entity is a trust in which a labor organization is interested must be based on the facts in each case. A trust will be considered significant, and therefore must be reported on Form T-1, if (1) it has annual receipts of $200,000 or more during the trust's most recent fiscal year, and (2) the labor organization's financial contribution to the trust or the contribution made on the labor organization's behalf, or as a result of a negotiated agreement to which the labor organization is a party, is $10,000 or more annually.

If a trust has annual receipts of less than $200,000 or if the labor organization's financial contribution to a trust that has annual receipts of $200,000 or more, or the contribution made on the labor organization's behalf, or as a result of a negotiated agreement to which the labor organization is a party, is less than $10,000 annually, the labor organization need only report the existence of the trust and the amount of the labor organization's contribution or the contribution made on the labor organization's behalf, or as a result of a negotiated agreement to which the labor organization is a party. This information should be reported in Item 68 as required by the instructions for Item 10 and, if the contribution was made by the

labor organization itself, in the appropriate disbursement item in Statement B.

If the labor organization's financial contribution to a trust, or the contribution made on the labor organization's behalf, or as a result of a negotiated agreement to which the labor organization is a party, is $10,000 or more annually, the labor organization must report all of the assets, liabilities, receipts, and disbursements of the trust on Form T-1.

No Form T-1 should be filed for any labor organization that already files a Form LM-2, LM-3, or LM-4, nor should a report be filed for any entity that is expressly exempted from reporting in the Act. No separate report need be filed for Political Action Committee (PAC) funds if publicly available reports on the PAC funds are filed with a Federal or state agency, or for a political organization for which reports are filed with the Internal Revenue Service pursuant to 26 U.S.C. 527. No separate report is required for an employee benefit plan that filed a complete and timely annual report pursuant to the requirements of the Employee Retirement Income Security Act of 1974 (ERISA), 29 U.S.C. 1023, 1024(a), and 1030, and 29 C.F.R. 2520.103-1, for the plan year ending with or within the year preceding the year covered by the reporting union's LM-2, or if annual audits are freely available on demand under § 302(c)(5)(B) of the LMRA, 29 U.S.C.186(c)(5)(B).

Form T-1 must be filed within 90 days after the expiration of the trust's fiscal year. If the trust's fiscal year is not the same as the labor organization's fiscal year, state when the trust's fiscal year ends in item 68 as required by the instructions for Item 10. See Instructions for Form T-1, Trust Annual Report.

Questions regarding these reporting requirements should be directed to the OLMS Division of Interpretations and Standards, which can be reached at the above address, by email at olms-mail@dol-esa.gov, by phone at 202-693-0123 or by fax at 202-693-1340. The Department will publish additional information giving further practical guidance on the reporting requirements for trusts on the OLMS website at www.dol.gov/dol/esa.

Examples of a trust in which a labor organization is interested may include, but are not limited to, the following entities:

Example A: The Redevelopment Corporation – A labor organization creates an entity named the Redevelopment Corporation, or appoints one or more of the members of the governing board of the Corporation, which is established primarily to enable members of the labor organization to obtain low cost housing constructed with federal Housing and Urban Development (HUD) grants. The Redevelopment Corporation must be reported as a trust in which the labor organization or organizations that created it, or that appointed members to its governing board, have an interest. A labor organization that neither participated in the creation of the Corporation, nor appointed members of its governing board, but loaned money to the Corporation to use as matching money for HUD grants need not report the Corporation as a trust in which it is interested.

Example B: The Educational Institute – Five reporting labor organizations form the Educational Institute to provide educational services primarily for the benefit of their members. Similar services are also provided to the general public. Each labor organization contributes funds to start the Educational Institute, which will then offer various educational programs that will generate revenue. Each labor organization that participated in forming the Institute, or that appoints a member to its governing body, must report the Educational Institute as a trust in which it is interested.

Example C: The Bank – A reporting labor

organization forms a bank that is chartered and licensed under Federal and state laws, or selects a member of the board of directors of a bank that is already in existence, for the purpose of ensuring that banking services are available to members at reasonable cost, or as an investment for the purpose of increasing funds available for union activities for the benefit of union members. Any labor organization that participated in forming the bank, or that appoints a member to the bank's board of directors, must report the bank as a trust in which it has an interest.

Example D: Joint Funds – A reporting labor organization that forms a "joint fund" with a large national manufacturer to offer a variety of training and jobs skills programs for members of the labor organization, or appoints a member to the governing body of such a fund, must report the joint fund as a trust in which the labor organization has an interest.

Example E: 302(c)(5) through (9) Plans – A reporting labor organization forms a plan permitted under Section 302(c)(5) through (9) of the LMRA (29 U.S.C. 186 (c)(5) through (9)), and files a complete annual financial report as required under ERISA. The labor organization reports only that the plan exists and states where the ERISA annual financial report may be viewed. This information should be reported in Item 68. No Form T-1 need be filed even if the labor organization contributes more than $10,000 to the plan.

XI. Completing Form LM-2

INFORMATION ITEMS 1–21

Answer Items 1 through 21 as instructed. Enter an "X" in the appropriate box for those questions requiring a "Yes" or "No" answer; do not leave both boxes blank. Enter a single "0" in the boxes for items requiring a number or dollar amount if there is nothing to report.

1. FILE NUMBER — Enter the 6-digit file number that OLMS assigned to the labor organization. If the labor organization does not have the number on file and cannot obtain the number from prior reports filed with the Department, the number can be obtained from the OLMS website at www.union-reports.dol.gov, or by contacting the nearest OLMS field office listed on page XX of these instructions to obtain the labor organization's file number. The labor organization's 6-digit file number must also be entered in the File Number boxes at the top of pages 2 through XX of Form LM-2.

2. PERIOD COVERED — Enter the beginning and ending dates of the period covered by this report. The labor organization's report should never cover more than a 12-month period. For example, if the labor organization's 12-month fiscal year begins on January 1 and ends on December 31, enter these dates as 01/01/20XX and 12/31/20XX. It would be incorrect to enter January 1 of one year through January 1 of the next year.

If the labor organization changed its fiscal year, enter in Item 2 (Period Covered) the ending date for the period of less than 12 months, which is the labor organization's new fiscal year ending date, and report in Item 68 (Additional Information) that the labor organization changed its fiscal year. For example, if the labor organization's fiscal year ending date changes from June 30 to December 31, a report must be filed for the partial year from July 1 to December 31. Thereafter, the labor organization's annual report should cover a full 12-month period from January 1 to December 31.

3. AMENDED, HARDSHIP EXEMPTED, OR TERMINAL REPORT — Enter an "X" in the box in Item 3(a) if the labor organization is filing an amended report correcting a previously filed report. Enter an "X" in the box in Item 3(b) if the labor organization is filing under the hardship exemption procedures defined in Section IV. Enter an "X" in the box in Item 3(c) if the labor organization has gone out of

business by disbanding, merging into another labor organization, or being merged and consolidated with one or more labor organizations to form a new labor organization, and this is the labor organization's terminal report. Be sure the date the labor organization ceased to exist is entered in Item 2 (Period Covered) after the word "Through." See Section XII (Labor Organizations That Have Ceased to Exist) of these instructions for more information on filing a terminal report.

4. AFFILIATION OR ORGANIZATION NAME — Enter the name of the national or international labor organization that granted the labor organization a charter. "Affiliates," within the meaning of these instructions, are labor organizations chartered by the same parent body, governed by the same constitution and bylaws, or having the relationship of parent and subordinate. For example, a parent body is an affiliate of all of its subordinate bodies, and all subordinate bodies of the same parent body are affiliates of each other.

If the labor organization has no such affiliation, enter the name of the labor organization as currently identified in the labor organization's constitution and bylaws or other organizational documents.

5. DESIGNATION — Enter the specific designation that is used to identify the labor organization, such as Local, Lodge, Branch, Joint Board, Joint Council, District Council, etc.

6. DESIGNATION NUMBER — Enter the number or other identifier, if any, by which the labor organization is known.

7. UNIT NAME — Enter any additional or alternate name by which the labor organization is known, such as "Chicago Area Local."

8. MAILING ADDRESS — Enter the current address where mail is most likely to reach the labor organization as quickly as possible. Be sure to indicate the first and last name of the person, if any, to whom such mail should be sent and include any building and room number.

9. PLACE WHERE RECORDS ARE KEPT — If the records required to be kept by the labor organization to verify this report are kept at the address reported in Item 8 (Mailing Address), or the address on the address label, answer "Yes." If not, answer "No" and provide in Item 68 (Additional Information) the address where the labor organization's records are kept.

10. TRUSTS OR FUNDS — Answer "Yes" to Item 10, if the labor organization has an interest in a trust as defined in 29 U.S.C. 402(l) (see Section X of these Instructions). Provide in Item 68 (Additional Information) the full name, address, and purpose of each trust. Also include in Item 68 the fiscal year ending date for any trust for which a Form T-1 is filed if the trust's fiscal year is different from that of the labor organization. If no Form T-1 is required to be filed on the trust because (1) the trust had annual receipts of less than $200,000 during the trust's most recent fiscal year or (2) the labor organization's financial contribution to the trust or the contribution made on the labor organization's behalf, or as a result of a negotiated agreement to which the labor organization is a party, is less than $10,000, the labor organization should also report the amount of the contribution in Item 68 and, if the contribution was made by the labor organization itself, in the appropriate disbursement item in Statement B. Additionally, if no Form T-1 is filed because financial information is already available as a result of the disclosure requirements of another federal statute, list the name of any government agency, such as the Securities and Exchange Commission (SEC) or the Pension and Welfare Benefits Administration (PWBA) of the Department of Labor, with which the trust files a publicly available report, and the relevant file number of the trust, or otherwise indicate where the relevant report may be

viewed. See Instructions for Form T-1, Trust Annual Report, for guidance on reporting the assets, liabilities, receipts, and disbursements of these entities.

11. POLITICAL ACTION COMMITTEE FUNDS — If the labor organization answered "Yes" to Item 11, provide in Item 68 (Additional Information) the full name of each separate political action committee (PAC) and list the name of any government agency, such as the Federal Election Commission or a state agency, with which the PAC has filed a publicly available report, and the relevant file number of the PAC. (PAC funds kept separate from the labor organization's treasury need not be included in the labor organization's Form LM-2 if publicly available reports on the PAC funds are filed with a Federal or state agency.)

12. AUDIT OR REVIEW OF BOOKS AND RECORDS — If the labor organization answered "Yes" to Item 12, indicate in Item 68 (Additional Information) whether the audit or review was performed by an outside accountant or a parent body auditor/representative. If an outside accountant performed the audit or review, provide the name of the accountant or accounting firm. Report any audit or review by an outside accountant or a parent body auditor/representative in which the labor organization's books and records were examined to verify their accuracy and validity. The term "audit or review" does not include providing assistance in developing a bookkeeping system, providing routine bookkeeping services, or merely compiling information from the labor organization's books and records to prepare Form LM-2 or other financial reports. Also, do not answer "Yes" to Item 12 if an audit committee or trustees of the labor organization performed the audit or review.

13. LOSSES OR SHORTAGES — Answer "Yes" to Item 13 if the labor organization experienced a loss, shortage, or other discrepancy in its finances during the period covered. Describe the loss or shortage in detail in Item 68 (Additional Information), including such information as the amount of the loss or shortage of funds or a description of the property that was lost, how it was lost, and to what extent, if any, there has been an agreement to make restitution or any recovery by means of repayment, fidelity bond, insurance, or other means.

14. FIDELITY BOND — Enter the maximum amount recoverable for a loss caused by any officer, employee, or agent of the labor organization who handled the labor organization's funds. Enter "0" if the labor organization was not covered by a fidelity bond during the reporting period.

NOTE: *If the labor organization had property and annual financial receipts that totaled $5,000 or more, each of the labor organization's officers, employees, and agents who handles funds or other property of the labor organization must be bonded. The amount of the bond must be at least 10% of the value of the funds handled by the individual during the last reporting period, up to a maximum bond of $500,000. The bond must be obtained from a surety company approved by the Secretary of the Treasury. If you have any questions or need more information about bonding requirements, contact the nearest OLMS field office listed on page XX of these instructions.*

15. ACQUISITION OR DISPOSITION OF PROPERTY — If the labor organization answered "Yes" to Item 15, describe in Item 68 (Additional Information) the manner in which the labor organization acquired or disposed of property, such as donating office furniture or equipment to charitable organizations, trading in assets, or giving away other tangible property of the labor organization. Include the type of property, its value, and the identity of the recipient or donor, if any. Also report in Item 68 the cost or other basis at which any acquired assets were entered on the labor organization's books or the cost or other basis at which any assets disposed of were carried on the labor organization's

books.

For assets that were traded in, enter in Item 68 the cost, book value, and trade-in allowance.

16. PLEDGED OR ENCUMBERED ASSETS — If the labor organization answered "Yes" to Item 16, identify in Item 68 (Additional Information) all of the labor organization's assets pledged or encumbered in any way (such as those pledged as collateral for a loan) at the end of the reporting period. Also report in Item 68 their fair market value, and provide details of transactions related to the encumbrance.

17. CONTINGENT LIABILITIES — If the labor organization answered "Yes" to Item 17, describe in Item 68 (Additional Information) the transactions or events resulting in the contingent liabilities and include the identity of the claimant or creditor. Contingent liabilities are potential obligations that may or may not develop into actual liabilities in the future. Examples of a contingent liability are a loan co-signed by the labor organization, or a pending lawsuit that could result in the labor organization being ordered to pay damages or make other payments.

A pending lawsuit is considered a contingent liability that must be reported in Item 17 if, in the opinion of legal counsel, it is reasonably possible that the labor organization will be required to make some payment. Such lawsuits must be reported as contingent liabilities regardless of whether or not the possible losses would have a materially adverse effect on the labor organization's financial condition. List in Item 68 each lawsuit, including the case number and the court.

18. CHANGES IN CONSTITUTION AND BYLAWS OR PRACTICES AND PROCEDURES — If the labor organization answered "Yes" to Item 18 because the labor organization's constitution and bylaws were changed during the reporting period (other than rates of dues and fees), submit two dated copies of the new constitution and bylaws of the labor organization to OLMS at the following address:

U.S. Department of Labor
Employment Standards Administration
Office of Labor-Management Standards
200 Constitution Avenue, N.W.
Room N-5616
Washington, DC 20210-0001

If the labor organization is governed by a uniform constitution and bylaws prescribed by the labor organization's parent national or international body, the labor organization's parent body may file the constitution and bylaws on the labor organization's behalf. If the parent body files a constitution and bylaws on the labor organization's behalf, answer "Yes" to Item 18 and state that fact in Item 68 (Additional Information).

If the labor organization answered "Yes" to Item 18 because the labor organization changed any of the practices/procedures listed below during the reporting period and the practices/procedures are not described in the labor organization's constitution or bylaws, the labor organization must file an amended Form LM-1 (Labor Organization Information Report) to update information on file with the Department:

- qualifications for or restrictions on membership;
- levying assessments;
- participating in insurance or other benefit plans;
- authorizing disbursement of labor organization funds;
- auditing financial transactions of the labor organization;
- calling regular and special meetings;
- authorizing bargaining demands;
- ratifying contract terms;
- authorizing strikes;
- disciplining or removing officers or agents for breaches of their trust;
- imposing fines and suspending or

expelling members including the grounds for such action and any provision made for notice, hearing, judgment on the evidence, and appeal procedures;
- selecting officers and stewards and any representatives to other bodies composed of labor organizations' representatives;
- invoking procedures by which a member may protest a defect in the election of officers (including not only all procedures for initiating an election protest but also all procedures for subsequently appealing an adverse decision, e.g., procedures for appeals to superior or parent bodies, if any); and
- issuing work permits.

Contact the nearest OLMS field office listed on page XX of these instructions to obtain blank copies of Form LM-1.

NOTE: *Federal employee labor organizations subject solely to the Civil Service Reform Act or Foreign Service Act are not required to submit an amended Form LM-1 to describe revised or changed practices/procedures.*

19. NEXT REGULAR ELECTION — Enter the month and year of the labor organization's next regular election of general officers (president, vice president, treasurer, secretary, etc.). Do not report the date of any interim election to fill vacancies.

20. NUMBER OF MEMBERS — Enter the total reported on Line 7, Column (B) of Schedule 13 (Membership Status, Dues and Other Payments, and Per Capita Tax Information).

21. DUES AND FEES — Enter the dues and fees established by the labor organization. If more than one rate applies, enter the minimum and maximum rates. Enter "None" where appropriate.

Line (a): Enter the regular dues, fees or other periodic payments that a member must pay to be in good standing in the labor organization, including the calendar basis for the payment (per month, per year, etc.). If "working" dues are required by the labor organization as a part of regular dues enter the amount or percent of "working" dues, including the basis for the payment (per hour, per month, etc.). Include only the dues or fees of regular members and not dues or fees of members with special rates, such as apprentices, retirees, or unemployed members.

Line (b): Enter the initiation fees required from new members.

Line (c): Enter the fees other than dues required from transferred members. Such fees are those charged to persons applying for a transfer of membership to the labor organization from another labor organization with the same affiliation. Do not report fees charged to members transferring from one class of membership to another within the labor organization.

Line (d): If the labor organization issues work permits, enter the fees required and enter the calendar basis for the payment (per month, per year, etc.). Work permit fees are fees charged to nonmembers of the labor organization who work within its jurisdiction. Do not report as work permit fees those fees charged to nonmember applicants for membership pending acceptance of their membership application, or fees charged to persons applying for transfer of membership to the labor organization pending acceptance of their application for transfer.

FINANCIAL DETAILS

REPORT ONLY DOLLAR AMOUNTS

Report all amounts in dollars only. Round cents to the nearest dollar. Amounts ending in $.01 through $.49 should be rounded down. Amounts ending in $.50 through $.99 should be rounded up.

REPORTING CLASSIFICATIONS

Complete all items and lines on the form as given. Do not use different accounting classifications or change the wording of any item or line.

BEGINNING AND ENDING AMOUNTS

Entries in Schedules 2 and 9 and in Statement A must report amounts for both the start and the end of the reporting period. The amounts entered for the start of the reporting period on the labor organization's report should be identical to the amounts entered for the end of the reporting period on last year's report. If the amounts are not the same, fully explain the difference in Item 68 (Additional Information).

COMPLETE SCHEDULES FIRST

Complete Schedules 1 through 22 and transfer the totals as indicated before completing Statements A and B. Be sure to complete all applicable lines in Schedules 1 through 22.

COMPLETE ALL ITEMS 22 THROUGH 67

Complete all items in Statement A and Statement B. Enter "0" where appropriate.

SCHEDULES 1 THROUGH 12

SCHEDULE 1 – ACCOUNTS RECEIVABLE AGING SCHEDULE – The labor organization must report 1) individual accounts that are valued at $1,000 or more and that are more than 90 days past due at the end of the reporting period or were liquidated, reduced or written off during the reporting period; and 2) the total aggregated value of all other accounts (that is, those that are less than $1,000) that are more than 90 days past due at the end of the reporting period or were liquidated, reduced or written off during the reporting period.

Column (A): Enter on Lines 1 through 22 the name of any entity or individual with which the labor organization has an account receivable of $1,000 or more that is 90 days or more past due at the end of the reporting period or that was liquidated, reduced or written off during the reporting period without the receipt of cash sufficient to cover the total value of the account receivable.

Column (B): Enter on Lines 1 through 22 the total amount of money owed to the labor organization by the entity or individual at the end of the reporting period. Enter on Line 23 the total from any additional pages. Add Lines 1 through 23 and enter the total on Line 24. Enter on Line 25 the total amount of money owed to the labor organization in all other accounts receivable (those of less than $1,000) that were 90 days or more past due or were liquidated, reduced or written off. Add Lines 24 and 25 and enter the total on Line 26.

Column (C): Enter on Lines 1 through 22 the total amount of money owed to the labor organization by the entity or individual at the end of the reporting period that is 90 to 180 days past due. Enter on Line 23 the total from any additional pages. Add Lines 1 through 23 and enter the total on Line 24. Enter on Line 25 the total amount of money owed to the labor organization in all other accounts receivable (those of less than $1,000) that are 90 to 180 days past due. Add Lines 24 and 25 and enter the total on Line 26.

Column (D): Enter on Lines 1 through 22 the total amount of money owed to the labor organization by the entity or individual at the end of the reporting period that is more than 180 days past due. Enter on Line 23 the total from any additional pages. Add Lines 1 through 23 and enter the total on Line 24. Enter on Line 25 the total amount of money owed to the labor organization in all other accounts receivable (those of less than $1,000) that are more than 180 days past due. Add Lines 24 and 25 and enter the total on Line 26.

Column (E): Enter on Lines 1 through 22 the total amount of money owed to the labor organization by the entity or individual that was liquidated, reduced or written off during the reporting period by the reporting labor organization without the receipt of cash sufficient to cover the total value of the account receivable. Enter on Line 23 the total from any additional pages. Add Lines 1 through 23 and enter the total on Line 24. Enter on Line 25 the total amount of money owed to the labor organization in all other accounts receivable (those of less than $1,000) that was liquidated, reduced or written off during the reporting period by the reporting labor organization without the receipt of cash sufficient to cover the total value of the account receivable. Add Lines 24 and 25 and enter the total on Line 26.

Provide in Item 68 (Additional Information) all details and circumstances in connection with the liquidation, reduction or writing off of the account receivable.

SCHEDULE 2 – LOANS RECEIVABLE — Report details of all direct and indirect loans (whether or not evidenced by promissory notes or secured by mortgages) owed to the labor organization at any time during the reporting period by individuals, business enterprises, benefit plans, and other entities including labor organizations. An example of an indirect loan is a disbursement by the labor organization to an educational institution for the tuition expense of an officer, employee, or member that must be repaid to the labor organization by that individual. Be sure to report all loans that were made and repaid in full during the reporting period. Do not include investments in corporate bonds or mortgages purchased on a block basis through a bank or similar institution, which must be reported in Schedule 5 (Investments Other Than U.S. Treasury Securities).

NOTE: *Advances, including salary advances, are considered loans and must be reported in Schedule 2 (Loans Receivable). However, advances to officers and employees of the labor organization for travel expenses necessary for conducting official business are not considered loans if the following conditions are met:*

- *The amount of an advance for a specific trip does not exceed the amount of expenses reasonably expected to be incurred for official travel in the near future, and the amount of the advance is fully repaid or fully accounted for by vouchers or paid receipts within 30 days after the completion or cancellation of the travel.*

- *The amount of a standing advance to an officer or employee who must frequently travel on official business does not unreasonably exceed the average monthly travel expenses for which the individual is separately reimbursed after submission of vouchers or paid receipts, and the individual does not exceed 60 days without engaging in official travel.*

See the instructions for Schedules 7 (Other Assets), 11 (All Officers and Disbursements to Officers) and 12 (Disbursements to Employees) for reporting travel advances that meet these criteria.

Column (A): Enter the following information on Lines 1 through 3 (and on additional pages if necessary):

- The name of each officer, employee, or member whose total loan indebtedness to the labor organization at any time during the reporting period exceeded $250, and the name of each business enterprise which had any loan indebtedness, regardless of amount, at any time during the reporting period;

- The purpose of each loan;

- The security given for each loan; and

- The terms of repayment for each loan.

For each officer or employee listed, indicate after each name either "O" (officer) or "E" (employee).

Column (B): Enter on Lines 1 through 3 the loan amounts outstanding at the start of the reporting period from each listed individual and business enterprise. Enter on Line 4 the total from any additional pages. Enter on Line 5 the total of loans made to officers, employees, or members whose total individual loan indebtedness to the labor organization at any time during the reporting period did not exceed $250, and all loans, regardless of amount, made to other individuals and entities. Add Lines 1 through 5 and enter the total on Line 6 and in Item 24 (Loans Receivable), Column (A) of Statement A.

Column (C): Enter on Lines 1 through 3 the amount of loans made during the reporting period to each listed individual and business enterprise. Enter on Line 4 the total from any additional pages. Enter on Line 5 the total of all other loans made during the reporting period. Add Lines 1 through 5 and enter the total on Line 6 and in Item 63 (Loans Made) of Statement B.

Columns (D)(1) and (D)(2): Enter on Lines 1 through 3 the amount of loan repayments during the reporting period from each listed individual and business enterprise. Report in these columns only the portion of the payments applied toward principal; interest received must be reported in Item 40 (Interest). Use Column (D)(1) to report repayments received in cash. Use Column (D)(2) to report repayments made in a manner other than cash, such as repayments made by officers or employees by means of deductions from their salaries. Enter on Line 4 the totals from any additional pages. Enter on Line 5 the amount of loan repayments from all other loans. Add Lines 1 through 5, Columns (D)(1) and (D)(2), and enter the totals on Line 6. Enter the total from Line 6, Column (D)(1) in Item 45 (Repayments of Loans Made) of Statement B. Explain in Item 68 (Additional Information) any non-cash amounts reported in Column (D)(2).

Column (E): Enter on Lines 1 through 3 the loan amounts outstanding at the end of the reporting period for each listed individual and business enterprise. Enter on Line 4 the total from any additional pages. Enter on Line 5 the total amount outstanding at the end of the reporting period for all other loans. Add Lines 1 through 5 and enter the total on Line 6 and in Item 24 (Loans Receivable), Column (B) of Statement A. If any loans receivable were liquidated, reduced or written off during the reporting period, the reason and the amount must be reported in Item 68 (Additional Information).

NOTE: *Section 503(a) of the LMRDA (29 U.S.C. 503) prohibits labor organizations from making direct or indirect loans to any officer or employee of the labor organization which results in a total indebtedness on the part of such officer or employee to the labor organization in excess of $2,000 at any time.*

SCHEDULE 3 – SALE OF INVESTMENTS AND FIXED ASSETS — Report details of the sale or redemption by the labor organization of U.S. Treasury securities, marketable securities, other investments, and fixed assets, including those fixed assets that were expensed (that is, the cost of the asset was charged to current expenses, rather than entered on the books and periodically depreciated), during the reporting period. Include receipts from sales of mortgages that were purchased on a block basis through a bank or similar institution. Do not include the receipts from repayments by individual mortgagors, which must be reported in Schedule 2 (Loans Receivable) as loan repayments.

Column (A): Enter on Lines 1 through 11 (and on additional pages, if necessary) a general description of the type of investment or fixed asset sold, such as U.S. Treasury securities, stocks, bonds,

land, automobiles, etc. If land or buildings were sold, enter the location of the property.

Column (B): Enter the total cost of each type of investment (including any transaction costs) or fixed asset described in Column (A).

Column (C): Enter the value at which the investments or fixed assets were shown on the labor organization's books.

Column (D): Enter the gross sales (or contract) price of the investments or fixed assets.

Column (E): Enter the net amount received from the sale of the investments or fixed assets. If the amount received during the reporting period is less than the amount due (gross sales price less any deductions for selling expenses and repayments of secured loans or mortgages), the additional amount due to the labor organization must be reported in Schedule 7 (Other Assets) with a description sufficient to identify the type of asset. However, if a mortgage or note is taken back, it must be reported as a new loan in Schedule 2 (Loans Receivable).

Enter on Line 12, Columns (B) through (E) the totals from any additional pages. Add Lines 1 through 5, Columns (B) through (E), and enter the totals on Line 13.

Enter on Line 14 the total amount from the sale or redemption of U.S. Treasury securities, marketable securities, or other investments that was promptly reinvested (i.e., "rolled over") in U.S. Treasury securities, marketable securities, or other investments during the reporting period. Calculate the total amount reinvested by adding, for each investment, the lower of each investment's original cost or the amount received from the sale or redemption that was actually reinvested. If only a portion of the amount received was reinvested, only the reinvested portion may be included on Line 14. Interest and dividends received during the reporting period must be reported in Items 40 (Interest) and 41 (Dividends).

Subtract Line 14 from Line 13, Column (E), and enter the difference on Line 15 and in Item 43 (Sale of Investments and Fixed Assets) of Statement B.

SCHEDULE 4 – PURCHASE OF INVESTMENTS AND FIXED ASSETS — Report details of the purchase by the labor organization of U.S. Treasury securities, marketable securities, other investments, and fixed assets, including those fixed assets that were expensed (that is, the cost of the asset was charged to current expenses, rather than entered on the books and periodically depreciated), during the reporting period. Include disbursements for mortgages that were purchased on a block basis through a bank or similar institution.

Column (A): Enter on Lines 1 through 11 (and on additional pages, if necessary) a general description of the type of investment or fixed asset purchased, such as U.S. Treasury securities, stocks, bonds, land, automobiles, etc. If land or buildings were purchased, enter the location of the property.

Column (B): Enter the total cost of each type of investment (including any transaction costs) or fixed asset described in Column (A).

Column (C): Enter the value at which the investments or fixed assets were entered on the labor organization's books. If assets were traded in on assets purchased, answer Item 15 (Acquisition or Disposition of Property) "Yes," and see the instructions for that item.

Column (D): Enter the total amount disbursed for each type of investment or fixed asset purchased during the reporting period. Do not include any unpaid balance that must be reported in Schedule 9 (Loans Payable) or Item 32 (Mortgages Payable).

Enter on Line 12, Columns (B) through (D) the totals from any additional pages. Add Lines 1 through 12, Columns (B) through (D), and enter the totals on Line 13.

Enter on Line 14 the total amount from the sale or redemption of U.S. Treasury securities, marketable securities, or other investments that was promptly reinvested (i.e., "rolled over") in U.S. Treasury securities, marketable securities, or other investments during the reporting period. Calculate the total amount reinvested by adding, for each investment, the lower of each investment's original cost or the amount received from the sale or redemption that was actually reinvested. If only a portion of the amount received was reinvested, only the reinvested portion may be included on Line 14. Interest and dividends received during the reporting period must be reported in Items 40 (Interest) and 41 (Dividends). The total on Line 14 must agree with the amount reported on Line 14 of Schedule 3 (Sale of Investments and Fixed Assets).

Subtract Line 14 from Line 13, Column (D), and enter the difference on Line 15 and in Item 62 (Purchase of Investments and Fixed Assets) of Statement B.

SCHEDULE 5 – INVESTMENTS OTHER THAN U.S. TREASURY SECURITIES — Report details of all the labor organization's investments at the end of the reporting period, other than U.S. Treasury securities, including mortgages purchased on a block basis and investments in any trust as defined in Section X (Trusts in Which a Labor Organization is Interested) of these instructions. Do not include savings accounts, certificates of deposit, or money market accounts, which must be reported in Item 22 (Cash).

Line 1: Enter in Column (B) the total cost of all the labor organization's marketable securities including transaction costs such as brokerage commissions. Marketable securities are those for which current market values can be obtained from published reports of transactions in listed securities or in securities traded "over the counter," such as corporate stocks and bonds, stock and bond mutual funds, state and municipal bonds, and foreign government securities.

Line 2: Enter in Column (B) the total book value of all the labor organization's marketable securities. Book value is the lower of cost or market value.

Line 3: List in Column (A) each marketable security that has a book value over $5,000 and exceeds 5% of the total book value entered on Line 2 and enter its book value in Column (B).

Line 4: Enter the total cost, including any transaction costs, of all the labor organization's other investments (that is, those that are not U.S. Treasury securities or marketable securities). Include mortgages purchased on a block basis.

Line 5: Enter the total book value of such other investments. Book value is the lower of cost or market value.

Line 6: List in Column (A) each other investment that has a book value over $5,000 and exceeds 5% of the total book value entered on Line 5 and enter its book value in Column (B).

NOTE: *All trusts in which the labor organization is interested in which the labor organization owns an investment interest must be reported in Schedule 5. Enter on Lines 6(a) through (d) the name of each entity in Column (A) and the labor organization's share of its book value in Column (B).*

Enter on Line 6(e) the total from any additional pages.

Line 7: Add Lines 2 and 5 and enter the total on Line 7 and in Item 26 (Investments), Column (B) of Statement A.

SCHEDULE 6 – FIXED ASSETS — Report details of all fixed assets, such as

land, buildings, automobiles and other vehicles, and office furniture and equipment owned by the labor organization at the end of the reporting period. Include fixed assets that were expensed (that is, the cost of the asset was charged to current expenses, rather than entered on the books and periodically depreciated), fully depreciated, or carried on the labor organization's books at scrap value or other nominal value.

Column (A): Enter on Line 1 the location of any land and on Line 3 the location of any buildings owned by the labor organization. Add additional pages if the labor organization owns multiple parcels or buildings.

Column (B): Enter the cost or other basis of the fixed assets listed in Column (A), including totals from any additional pages.

Column (C): Enter the accumulated depreciation, if any, of the fixed assets (except land) listed in Column (A) whose cost or other basis is reported in Column (B), including totals from any additional pages. If the labor organization "expenses" fixed assets, also include in Column (C) the amount that the labor organization charged to expenses when the assets were purchased.

Column (D): Enter the amount at which the fixed assets listed in Column (A) are carried on the labor organization's books, including totals from any additional pages. Include the nominal amount, if any, at which fully depreciated assets are carried on the labor organization's books. The amount reported in Column (D) should be the difference between Columns (B) and (C).

Column (E): Enter the fair market value of land and of all assets listed in Column (A) that were expensed, fully depreciated, or depreciated to scrap value or nominal value, including totals from any additional pages. It is not necessary to secure a formal appraisal of the assets; a good faith estimate is sufficient. The value used for insurance purposes or for tax appraisals, for example, will normally be acceptable as representing the fair market value.

Add Lines 1 through 7 for each of Columns (B) through (E), and enter the totals on Line 8. Enter the total from Line 8, Column (D) in Item 27 (Fixed Assets), Column (B) of Statement A.

SCHEDULE 7 – OTHER ASSETS — Report details of all the labor organization's assets at the end of the reporting period other than Item 22 (Cash), Item 23 (Accounts Receivable), Item 24 (Loans Receivable), Item 25 (U.S. Treasury Securities), Item 26 (Investments), and Item 27 (Fixed Assets).

The labor organization's other assets must be described in Column (A) and may be classified by general groupings or bookkeeping categories, such as utility deposits, inventory of supplies for resale, or travel advances that are not required to be reported as loans as explained in the instructions for Schedule 2 (Loans Receivable), if the description is sufficient to identify the type of assets. Enter in Column (B) the value as shown on the labor organization's books of each asset or group of assets described in Column (A).

NOTE: *"If the labor organization has an ownership interest of a non-investment nature in a trust in which it is interested, the value of the labor organization's ownership interest in the entity as shown on the labor organization's books must be reported in Schedule 7 (Other Assets). Enter in Column (A) the name of any such entity. Enter in Column (B) the value as shown on the labor organization's books of its share of the net assets of any such entity.*

Enter on Line 6 the total from any additional pages. Add Lines 1 through 6 and enter the total on Line 7 and in Item 28 (Other Assets), Column (B) of Statement A.

SCHEDULE 8 – ACCOUNTS PAYABLE AGING SCHEDULE – The labor organization must report1) individual accounts that are valued at $1,000 or more that are more than 90 days past due at the end of the reporting period or were liquidated, reduced or written off during the reporting period; and 2) the total aggregated value of all other accounts (that is, those that are less than $1,000) that are more than 90 days past due at the end of the reporting period or were liquidated, reduced or written off during the reporting period.

Column (A): Enter on Lines 1 through 22 the name of any entity or individual with which the labor organization has an account payable of $1,000 or more that is 90 days or more past due at the end of the reporting period or that was liquidated, reduced or written off during the reporting period without the disbursement of cash sufficient to cover the total value of the account payable.

Column (B): Enter on Lines 1 through 22 the total amount of money owed by the labor organization to the entity or individual at the end of the reporting period. Enter on Line 23 the total from any additional pages. Add Lines 1 through 23 and enter the total on Line 24. Enter on Line 25 the total amount of money owed by the labor organization in all other accounts payable (those of less than $1,000) that were 90 days or more past due or were liquidated, reduced or written off. Add Lines 24 and 25 and enter the total on Line 26.

Column (C): Enter on Lines 1 through 22 the total amount of money owed by the labor organization to the entity or individual at the end of the reporting period that is 90 to 180 days past due. Enter on Line 23 the total from any additional pages. Add Lines 1 through 23 and enter the total on Line 24. Enter on Line 25 the total amount of money owed by the labor organization in all other accounts payable (those of less than $1,000) that are 90 to 180 days past due. Add Lines 24 and 25 and enter the total on Line 26.

Column (D): Enter on Lines 1 through 22 the total amount of money owed by the labor organization to the entity or individual at the end of the reporting period that is more than 180 days past due. Enter on Line 23 the total from any additional pages. Add Lines 1 through 23 and enter the total on Line 24. Enter on Line 25 the total amount of money owed by the labor organization in all other accounts payable (those of less than $1,000) that are more than 180 days past due. Add Lines 24 and 25 and enter the total on Line 26.

Column (E): Enter on Lines 1 through 22 the total amount of money owed by the labor organization to the entity or individual that was liquidated, reduced or written off during the reporting period by the reporting labor organization without the disbursement of cash sufficient to cover the total value of the account payable. Enter on Line 23 the total from any additional pages. Add Lines 1 through 23 and enter the total on Line 24. Enter on Line 25 the total amount of money owed by the labor organization in all other accounts payable (those of less than $1,000) that was liquidated, reduced or written off during the reporting period by the reporting labor organization without the disbursement of cash sufficient to cover the total value of the account payable. Add Lines 24 and 25 and enter the total on Line 26.

Provide in Item 68 (Additional Information) all details and circumstances in connection with the liquidation, reduction or writing off of the account payable.

SCHEDULE 9 – LOANS PAYABLE — Report details of all loans payable on which the labor organization owed money at any time during the reporting period except those secured by mortgages or similar liens on real property (land or buildings) that must be reported in Item 32 (Mortgages Payable).

Column (A): Enter on Lines 1 through 11 (and on additional pages, if necessary) the name of each business enterprise to which a loan was payable. Also list the source of all other loans by general categories, such as banks, labor organizations, individuals, etc.

Column (B): For each loan in Column (A), enter the amount, if any, owed by the labor organization at the start of the reporting period. Enter on Line 12 the total from any additional pages. Add Lines 1 through 12 and enter the total on Line 13 and in Item 31 (Loans Payable), Column (C) of Statement A.

Column (C): For each loan in Column (A), enter the amount, if any, obtained by the labor organization during the reporting period in exchange for that loan liability. Enter on Line 12 the total from any additional pages. If, due to discounting by a bank or for any other reason, the amount received from a loan was less than the face value of the note or the amount repayable, enter the amount actually received and explain in Item 68 (Additional Information). Add Lines 1 through 12 and enter the total on Line 13 and in Item 44 (Loans Obtained) of Statement B.

Columns (D)(1) and (D)(2): For each loan in Column (A), enter the amount, if any, that the labor organization repaid to the lender during the reporting period. Report only repayments of principal; interest paid must be reported in Schedule 22 (Other Disbursements). Use Column (D)(1) to report repayments made in cash. Use Column (D)(2) to report repayments made in a manner other than by cash, such as repayments made to a creditor by offsetting an amount owed by the creditor to the labor organization. Enter on Line 12 the total from any additional pages. Add Lines 1 through 12, Columns (D)(1) and (D)(2), and enter the totals on Line 13. Enter the total from Line 13, Column (D)(1) in Item 64 (Repayment of Loans Obtained) of Statement B. Explain in Item 68 (Additional Information) any non-cash amounts reported in Column (D)(2).

Column (E): For each loan in Column (A), enter the balance, if any, that the labor organization owed the listed lender at the end of the reporting period. Enter on Line 11 the total from any additional pages. If any loans payable were liquidated, reduced or written off during the reporting period, the reason and amount must be reported in Item 68 (Additional Information). Add Lines 1 through 12 and enter the total on Line 13 and in Item 31 (Loans Payable), Column (D) of Statement A.

SCHEDULE 10 – OTHER LIABILITIES — Report details of all the labor organization's liabilities at the end of the reporting period other than Item 30 (Accounts Payable), Item 31 (Loans Payable), and Item 32 (Mortgages Payable).

Any portion of withheld taxes or any other payroll or other deductions, which have not been transmitted at the end of the reporting period, are liabilities of the labor organization and must be reported in Schedule 10. Payroll or other deductions that are retained by the labor organization (such as repayments of loans to officers or employees) must be fully explained in Item 68 (Additional Information).

The labor organization's other liabilities must be described in Column (A) and may be classified by general groupings or bookkeeping categories if the description is sufficient to identify the type of liability. List separately any payroll taxes withheld but not yet paid, other unpaid payroll taxes of the labor organization, such as FICA taxes, and any funds collected on behalf of affiliates or members and not disbursed by the end of the reporting period. Do not include reserves for special purposes (for example, "Reserve for Building Fund") that are actually an allocation of certain assets for specific purposes rather than a liability.

Enter in Column (B) the amount of each liability described in Column (A). Enter on Line 13 the total from any additional pages. Add Lines 1 through 13 and enter the total on Line 14 and in Item 33 (Other Liabilities), Column (D) of Statement A.

SCHEDULE 11 – ALL OFFICERS AND DISBURSEMENTS TO OFFICERS — List all the labor organization's officers and report all salaries and other direct and indirect disbursements to officers during the reporting period.

NOTE: *A "direct disbursement" to an officer is a payment made by the labor organization to the officer in the form of cash, property, goods, services, or other things of value.*

An "indirect disbursement" to an officer is a payment made by the labor organization to another party for cash, property, goods, services, or other things of value received by or on behalf of the officer. "On behalf of the officer" means received by a party other than the officer or the labor organization for the personal interest or benefit of the officer. Such payments include those made through a credit arrangement under which charges are made to the account of the labor organization and are paid by the labor organization.

Column (A): Enter in the boxes in Column (A)(B)(C), next to the (A), the last name, first name, and middle initial of each person who held office in the labor organization at any time during the reporting period. Include all the labor organization's officers whether or not any salary or other disbursements were made to them or on their behalf by the labor organization. "Officer" is defined in section 3(n) of the LMRDA (29 U.S.C. 402) as "any constitutional officer, any person authorized to perform the functions of president, vice president, secretary, treasurer, or other executive functions of a labor organization, and any member of its executive board or similar governing body."

Column (B): Enter in the boxes in Column (A)(B)(C), next to the (B), the title of the position each officer listed held during the reporting period. If an officer held more than one position during the reporting period, list each position and the dates on which the officer held the position.

Column (C): Enter in the boxes in Column (A)(B)(C), next to the (C), enter the appropriate letter to show the status of each officer: "N" for a new officer who took office during the reporting period; "P" for a past officer who was not in office at the end of the reporting period; or "C" for a continuing officer who was in office before the reporting period and was still in office at the end of the reporting period. If any officer was not elected at a regular election in accordance with the labor organization's constitution and bylaws or other governing documents on file with OLMS, explain the manner in which the officer was chosen in Item 68 (Additional Information).

Column (D): Enter the total of all net salary disbursements during the reporting period for the salary of each officer. Include disbursements for "lost time" or time devoted to union activities.

Column (E): Enter the total of all disbursements during the reporting period for the transmittal of taxes paid on behalf of the officer, including withholding taxes and direct taxes.

Withholding taxes include all disbursements to Federal, state, county and municipal government agencies for the transmittal of taxes withheld from the salaries of officers and employees.

Direct taxes include all taxes assessed against and paid by the labor organization, including the labor organization's FICA taxes as an employer. Do not include indirect taxes, such as sales and excise taxes, for purchases reported in other disbursement items.

Column (F): Enter the total of all disbursements during the reporting period for other payroll deductions (other than for taxes).

Column (G): Enter the total allowances made by direct and indirect disbursements to each officer on a daily, weekly, monthly, or other periodic basis. Do not include allowances paid on the basis of mileage or meals which must be reported in Column (H) or (I), as applicable.

Column (H): Enter all direct and indirect disbursements to each officer that were necessary for conducting official business of the labor organization, except salaries or allowances which must be reported in Columns (D) and (G), respectively.

Examples of disbursements to be reported in Column (H) include: all expenses that were reimbursed directly to an officer, meal allowances and mileage allowances, expenses for officers' meals and entertainment, and various goods and services furnished to officers but charged to the labor organization. Such disbursements should be included in Column (H) only if they were necessary for conducting official business; otherwise, report them in Column (I). Also include in Column (H) travel advances that are not considered loans as explained in the instructions for Schedule 2 (Loans Receivable).

Do not report the following disbursements in Schedule 11:

- Reimbursements to an officer for the purchase of investments or fixed assets, such as reimbursing an officer for a file cabinet purchased for office use, which must be reported in Schedule 4 (Purchase of Investments and Fixed Assets) and explained in Item 68 (Additional Information);

- Indirect disbursements for temporary lodging (room rent charges only) or transportation by public carrier necessary for conducting official business while the officer is in travel status away from his or her home and principal place of employment with the labor organization if payment is made by the labor organization directly to the provider or through a credit arrangement and these disbursements are reported in disbursement Schedules 15 through 22;

- Disbursements made by the labor organization to someone other than an officer as a result of transactions arranged by an officer in which property, goods, services, or other things of value were received by or on behalf of the labor organization rather than the officer, such as rental of offices and meeting rooms, purchase of office supplies, refreshments and other expenses of membership banquets or meetings, and food and refreshments for the entertainment of groups other than the officers and membership on official business;

- Office supplies, equipment, and facilities furnished to officers by the labor organization for use in conducting official business; and

- Maintenance and operating costs of the labor organization's assets, including buildings, office furniture, and office equipment; however, see "Special Rules for Automobiles" below.

Column (I): Enter all other direct and indirect disbursements to each officer. Include all disbursements for which cash, property, goods, services, or other things of value were received by or on behalf of each officer and were essentially for the personal benefit of the officer and not necessary for conducting official business of the labor organization.

Include in Column (I) all disbursements for transportation by public carrier between the officer's home and place of employment or for other transportation not involving the conduct of official business. Also, include the operating and maintenance costs of all the labor

organization's assets (automobiles, etc.) furnished to officers essentially for the officers' personal use rather than for use in conducting official business.

Do not include in Column (I) loans to officers, which must be reported in Schedule 2 (Loans Receivable) or disbursements for benefits to officers, which must be reported in disbursement Schedule 20 (Benefits).

Column (J): Add Columns (D) through (I) of each Line and enter the totals in Column (J). The totals in Column (J) must be allocated to Schedules 15 through 22 according to the instructions for those schedules.

Enter the totals of lines 1 through 7 for each Column on Line 8.

Line (K): Enter the estimated percentage of time spent by the officer on activities that fall within Schedules 15 through 22 in the box next to that schedule. Round to the nearest 10%. Using these percentages, report the amount of salary allocated to each schedule in accordance with the instructions for that schedule.

SPECIAL RULES FOR AUTOMOBILES

Include in Column (I) of Schedule 11 that portion of the operating and maintenance costs of any automobile owned or leased by the labor organization to the extent that the use was for the personal benefit of the officer to whom it was assigned. This portion may be computed on the basis of the mileage driven on official business compared with the mileage for personal use. The portion not included in Column (I) must be reported in Column (H).

Alternatively, rather than allocating these operating and maintenance costs between Columns (H) and (I), if 50% or more of the officer's use of the vehicle was for official business, the labor organization may enter in Column (H) all disbursements relative to that vehicle with an explanation in Item 68 (Additional Information) indicating that the vehicle was also used part of the time for personal business. Likewise, if less than 50% of the officer's use of the vehicle was for official business, the labor organization may report all disbursements relative to the vehicle in Column (I) with an explanation in Item 68 indicating that the vehicle was also used part of the time on official business.

The amount of decrease in the market value of an automobile used over 50% for the personal benefit of an officer must also be reported in Item 68.

SCHEDULE 12 – DISBURSEMENTS TO EMPLOYEES — Report all direct and indirect disbursements to employees of the labor organization who received more than $10,000 in the aggregate from the labor organization and from any affiliates of the labor organization during the reporting period. ("Affiliates" means labor organizations chartered by the same parent body, governed by the same constitution and bylaws, or having the relation of parent and subordinate.) Include disbursements to individuals other than officers who receive lost time payments even if the labor organization does not otherwise consider them to be employees or does not make any other direct or indirect disbursements to them. The definitions of "direct disbursements" and "indirect disbursements" are the same as the definitions stated above in Schedule 11.

Column (A), (B), and (C): Enter in the appropriate boxes the last name, first name, middle initial, and position of each employee who during the reporting period received $10,000 or more in the aggregate in gross salaries, allowances, and other direct and indirect disbursements from the labor organization and from any affiliates of the labor organization. The labor organization's report, however, should not include disbursements made by affiliates but should include only the disbursements made by the labor organization.

Enter in the appropriate boxes the name of any affiliate that paid any salaries, allowances, or expenses on behalf of a listed employee.

Columns (D) through (I): To complete Columns (D) through (I), follow the instructions for Columns (D) through (I) of Schedule 11.

Enter on Line 8, Columns (D) through (I) the totals of all gross salaries, allowances, and other disbursements for all employees of the labor organization not required to be listed above. Add Columns (D) through (I) for each of Lines 1 through 7 and enter the totals in Column (J). The totals in Column (J) must be allocated to Schedules 15 through 22 according to the instructions for those schedules.

SCHEDULE 13 – MEMBERSHIP STATUSINFORMATION— The membership categories in Column (A) are typical categories used by labor organizations to characterize membership status. Some organizations may not use one or more of these categories and others may have other categories that are not listed below, but the labor organization's members should be allocated to these categories as accurately as possible.

Active Members (Line 1) – Active members are those who pay full dues to the labor organization including members who are excused from paying dues because of special circumstances such as being on strike or because they are officers of the organization.

Inactive Members (Line 2) – Inactive members are those who pay less than full dues to the labor organization because they are currently not working at the trade.

Associate Members (Line 3) – Associate members are those who pay less than full dues to the labor organization in order to participate in certain benefit programs but are not represented by the labor organization for collective bargaining.

Apprentice Members (Line 4) – Apprentice members are those who pay less than full dues to the labor organization because they are learning the trade and are not yet fully qualified to practice the trade.

Retired Members (Line 5) – Retired members are those who pay less than full dues to the reporting labor organization because they are permanently not working at the trade.

Other Members (Line 6) – Other members are all those who pay dues to the reporting labor organization and do not fall into any of the other five categories.

Members (Line 7) – The total of all members of the labor organization (Total of Lines 1 through 6). Does not include Agency Fee Payers.

Agency Fee Paying Nonmembers (Line 8) – Agency fee paying nonmembers are those who make payments in lieu of dues to the reporting labor organization as a condition of employment under a union security provision in a collective bargaining agreement.

Total Members/Fee Payers (Line 9) – The total of all members and agency fee payers who pay dues or other payments (Total of Lines 7 and 8). The total in Column (B) is not the total number of members of the labor organization.

Enter in Column (B) the number of persons with the relationship to the labor organization stated in Column A. Place a "0" in any category for which the labor organization has no members. Enter the total from Line 7 in Item 20 (Number of Members).

Enter "Yes" in Column (C) if the category of membership listed in Column (A) is generally eligible to vote in elections held

by the labor organization. Enter "No" in the field if the category is generally ineligible to vote.

SCHEDULES 14 THROUGH 22

Schedules 14 through 22 provide detailed information on the financial operations of the labor organization in categories that reflect the services provided to union members. Receipts and disbursements are allocated to Schedules 14 through 22, and either listed as individual entries or as aggregated entries.

These schedules will be populated for the filer by the electronic filing software as long as the labor organization uses a properly configured electronic recordkeeping system that is compatible with the software provided by the Department. The Department's software will be compatible with all commonly used electronic recordkeeping systems. The system will allocate receipt and disbursement to the proper categories and determine whether a receipt or disbursement will be individually identified or aggregated within the appropriate schedule. The operations of the electronic filing software are described within the user manual.

Allocating Receipts

Each receipt of the labor organization must be allocated to one of the receipt items in Statement B. Some of these items have backup schedules that require more detailed information. If a receipt does not conform to one of the defined items in Statement B it must be included in Schedule 14 (Other Receipts) in which any "major" receipts during the reporting period must be separately identified. A "major" receipt includes: 1) any individual receipt of $5,000 or more; or 2) total receipts from any single entity or individual that aggregate to $5,000 or more during the reporting period. All other receipts in this schedule are aggregated. This process is discussed further below.

Allocating Disbursements

Each disbursement of the labor organization must be allocated to one of the disbursement items in Statement B. Some of these items have backup schedules that require more detailed information. Schedules 15 through 22 reflect various services provided to union members by the union in which all "major" disbursements during the reporting period in the various categories must be separately identified. A "major" disbursement includes: 1) any individual disbursement of $2,000 - $5,000 or more; or 2) total disbursements to any single entity or individual that aggregate to $2,000 - $5,000 or more during the reporting period. All other disbursements in these schedules are aggregated.

All disbursements, other than those reported elsewhere in Statement B, must be allocated to Schedules 15 though 22, as appropriate.

Example 1: The labor organization has an ongoing contract with a law firm that provides a wide range of legal services. The labor organization makes a single payment of $10,000 each month to the law firm. In a particular month the law firm spent 50% of its time on contract negotiation litigation and 50% advising the labor organization regarding and working for the enactment of a new Federal law. The labor organization must allocate the payment for that month as two distinct disbursements of $5,000 to Schedule 15 (Contract Negotiation and Administration), and Schedule 18 (Lobbying).

Example 2: If the labor organization received a settlement of $4,999 in a small claims lawsuit, the receipt would not be individually identified, as long as the settlement was the only receipt from the entity or individual during the reporting period. The receipt would be aggregated with other small receipts in Schedule 14

(Other Receipts).

Example 3: If the labor organization made three payments of $1800 each to an office supplies vendor for office supplies used by employees engaged in contract negotiations during the reporting period, a single disbursement to the vendor of $5,400 would be listed in Schedule 15 (Contract Negotiation and Administration).

Example 4: If a union pays a total of $6,000 to a printing company during the reporting year and determines that $5,000 of that bill should be allocated to organizing costs, that amount must be identified in Schedule 16 (Organizing). If the remaining $1,000 paid to the same printer over the course of the year was attributable to contract administration expenses, that amount will be reported in the total under Schedule 15 (Contract Negotiation and Administration), but the printer need not be identified as a recipient of any funds expended for Contract Negotiation and Administration, if the total paid to the same printer during the reporting year for services related to that category does not exceed $2,000 - $5,000.

Procedures for Completing Schedules 14 Through 22

A separate set of continuation pages must be used for each receipt and disbursement schedule. Each major receipt/disbursement must be listed in chronological order and include the full name and business address of the entity or individual, type of business or job classification of the entity or individual, purpose of the receipt/disbursement, date, and amount of the receipt/disbursement.

Enter in Column (A) the full name and business address of the entity or individual from which the receipt was received or to which the disbursement was made. Do not abbreviate the name of the entity or individual.

Enter in Column (B) the type of business or job classification of the entity or individual, such as printing company, office supplies vendor, lobbyist, think tank, marketing firm, bookkeeper, receptionist, shop steward, legal counsel, union member, etc.

Enter in Column (C) the purpose of the receipt/disbursement, which means a brief statement or description of the reason the receipt/disbursement was made. Examples of adequate descriptions include the following: preparing organizing campaign pamphlets, staffing a help desk, opposition research, litigation regarding questions concerning representation or of a refusal to bargain charge following an election conducted by the NLRB , grievance arbitration, get-out-the-vote, voter education, advocating or opposing legislation, job retraining, etc.

Enter in Column (D) the date that the receipt/disbursement was made. The date of receipt/disbursement for reporting purposes is the date the labor organization actually receives or disburses the money. The last day of the labor organization's fiscal year should be used for disbursements to officers and employees allocated from Column (J) of Schedules 11 (All Officers and Disbursements to Officers) and 12 (Disbursements to Employees).

Enter in Column (E) the amount of the receipt/disbursement.

Special Instructions for Reporting Disbursements:

The total of all direct or indirect disbursements required to be included in Column (J) of Schedules 11 (All Officers and Disbursements to Officers) and 12 (Disbursements to Employees) should be allocated among the disbursement Schedules 15 through 22 based on the percentage of time spent on each function. The reporting labor organization need only estimate, to the nearest 10%, the time spent by each employee on

duties that fall within one of the categories and to allocate the appropriate percentage of the employee 's salary in Column (J) to that category. There will be no more than one entry in each schedule for a particular officer or employee. For instance, the disbursements to an employee of the labor organization who made $50,000, according to Column (J) of Schedule 12, during the reporting period and spent 80% of their time on contract negotiation and 20% on organizing would be allocated between Schedules 15 (Contract Negotiation and Administration) and 16 (Organizing). There would be a single entry in Schedule 15 for $40,000 and a single entry in Schedule 16 for $10,000.

Disbursements to credit card companies for payment of monthly bills may not be reported as a single disbursement to the credit card company as the vendor. Instead, charges appearing on credit card bills paid during the reporting period must be allocated to the recipient of the payment by the credit card company according to the same process as described above.

Procedures for Completing the Detailed Summary Page

The Detailed Summary Page is used to summarize Schedules 14 through 22. The total of major receipts/disbursements during the reporting period must be entered in Line 1 of the appropriate summary schedule. The total of aggregated receipts/disbursements during the reporting period must be entered in Line 2. The total of Lines 1 and 2 must be entered on Line 3 and the appropriate line item of Statement B.

For example, if a labor organization has major disbursements of $200,000 in Schedule 16 (Organizing) and $7,000 in aggregated disbursements for organizing activities, then the labor organization will enter $200,000 in Line 1 and $7,000 in Line 2 of Schedule 16 on the Detailed Summary Page. The total of Lines 1 and 2 is $207,000, which is entered in Line 3 of the summary schedule and Item 51 (Organizing) of Statement B.

SCHEDULE 14 – OTHER RECEIPTS — Report the labor organization's receipts from all sources during the reporting period, other than those that must be reported elsewhere in Statement B, such as reimbursements from officers and employees for excess expense payments or travel advances not reported as loans in Schedule 2 (Loans Receivable); receipts from fundraising activities such as raffles, bingo games, and dances; funds received from a parent body, other unions, or the public for strike fund assistance; and receipts from another labor organization which merged into the labor organization. These receipts must be described in Column (C).

For all major receipts in this category:

Enter in Column (A) the full name and business address of the entity or individual from which the receipt was received. Do not abbreviate the name of the entity or individual.

Enter in Column (B) the type of business or job classification of the entity or individual, such as printing company, office supplies vendor, bookkeeper, receptionist, shop steward, legal counsel, etc.

Enter in Column (C) the purpose of the receipt in sufficient detail to determine why the receipt cannot be allocated to another schedule.

Enter in Column (D) the date that the receipt was received. The date of receipt for reporting purposes is the date the labor organization actually receives the money.

Enter in Column (E) the amount of the receipt.

Enter the total amount of major receipts from the continuation pages on Line 1 of Summary Schedule 14. Enter the total amount of aggregated receipts on Line 2

of Summary Schedule 14. Add Line 1 and Line 2 and enter the total on Line 3 of Summary Schedule 14 and in Item 48 (Other Receipts) of Statement B.

SCHEDULE 15 – CONTRACT NEGOTIATION AND ADMINISTRATION – Report the labor organization's direct and indirect disbursements to all entities and individuals during the reporting period associated with preparation for, and participation in, the negotiation of collective bargaining agreements and the administration and enforcement of the agreements made by the labor organization. Do not include strike benefits that must be reported in Item 59 (Strike Benefits).

Enter in Column (A) the full name and business address of the entity or individual to which the disbursement was made. Do not abbreviate the name of the entity or individual.

Enter in Column (B) the type of business or job classification of the entity or individual, such as printing company, office supplies vendor, bookkeeper, receptionist, shop steward, legal counsel, etc.

Enter in Column (C) the purpose of the disbursement, which means a brief statement or description of the reason the disbursement was made. Examples of adequate descriptions include the following: contract negotiation, grievance arbitration, litigation regarding the interpretation of a collective bargaining agreement, etc.

Enter in Column (D) the date that the disbursement was made. The date of disbursement for reporting purposes is the date the labor organization actually disburses the money. The last day of the labor organization's fiscal year should be used for disbursements to officers and employees allocated from Column (J) of Schedules 11 (All Officers and Disbursements to Officers) and 12 (Disbursements to Employees).

Enter in Column (E) the amount of the disbursement.

Enter the total amount of major disbursements from the continuation pages on Line 1 of Summary Schedule 15. Enter the total amount of aggregated disbursements on Line 2 of Summary Schedule 15. Add Line 1 and Line 2 and enter the total on Line 3 of Summary Schedule 15 and in Item 50 (Contract Negotiation and Administration) of Statement B.

SCHEDULE 16 – ORGANIZING – Report the labor organization's direct and indirect disbursements to all entities and individuals during the reporting period associated with efforts to become the exclusive bargaining representative for any unit of employees, or to keep from losing a unit in a decertification election, or to another labor organization or to recruit new members.

Enter in Column (A) the full name and business address of the entity or individual to which the disbursement was made. Do not abbreviate the name of the entity or individual.

Enter in Column (B) the type of business or job classification of the entity or individual, such as printing company, office supplies vendor, bookkeeper, receptionist, shop steward, legal counsel, etc.

Enter in Column (C) the purpose of the disbursement, which means a brief statement or description of why the disbursement was made. Examples of adequate descriptions include the following: preparing organizing campaign pamphlets, staffing a help desk, opposition research, litigation regarding questions concerning representation or of a refusal to bargain charge following an election conducted by the NLRB, etc. Neither the name of the employer nor the specific bargaining unit that is the subject of the organizing activity need be

identified.

Enter in Column (D) the date that the disbursement was made. The date of disbursement for reporting purposes is the date the labor organization actually disburses the money. The last day of the labor organization's fiscal year should be used for disbursements to officers and employees allocated from Column (J) of Schedules 11 (All Officers and Disbursements to Officers) and 12 (Disbursements to Employees).

Enter in Column (E) the amount of the disbursement.

Enter the total amount of major disbursements from the continuation pages on Line 1 of Summary Schedule 16. Enter the total amount of aggregated disbursements on Line 2 of Summary Schedule 16. Add Line 1 and Line 2 and enter the total on Line 3 of Summary Schedule 16 and in Item 51 (Organizing) of Statement B.

SCHEDULE 17 – POLITICAL ACTIVITIES – Report the labor organization's direct and indirect disbursements to all entities and individuals during the reporting period associated with political disbursements or contributions in money.

A political disbursement or contribution is one that is intended to influence the selection, nomination, election, or appointment of anyone to a Federal, state, or local executive, legislative or judicial public office, or office in a political organization, or the election of Presidential or Vice Presidential electors, and support for or opposition to ballot referenda. It does not matter whether the attempt succeeds. Include disbursements for communications with members (or agency fee paying nonmembers) and their families for registration, get-out-the-vote and voter education campaigns, the expenses of establishing, administering and soliciting contributions to union segregated political funds (or PACs), disbursements to political organizations as defined by the IRS in 26 U.S.C. 527, and other political disbursements.

Enter in Column (A) the full name and business address of the entity or individual to which the disbursement was made. Do not abbreviate the name of the entity or individual.

Enter in Column (B) the type of business or job classification of the entity or individual, such as campaign advisor, marketing firm, fund raiser, think tank, issue advocacy group, printing company, office supplies vendor, bookkeeper, receptionist, shop steward, legal counsel, etc.

Enter in Column (C) the purpose of the disbursement, which means a brief statement or description of the reason the disbursement was made. Examples of adequate descriptions include the following: a registration drive, get-out-the-vote campaign, voter education campaign, fund raising, etc.

Enter in Column (D) the date that the disbursement was made. The date of disbursement for reporting purposes is the date the labor organization actually disburses the money. The last day of the labor organization's fiscal year should be used for disbursements to officers and employees allocated from Column (J) of Schedules 11 (All Officers and Disbursements to Officers) and 12 (Disbursements to Employees).

Enter in Column (E) the amount of the disbursement.

Enter the total amount of major disbursements from the continuation pages on Line 1 of Summary Schedule 17. Enter the total amount of aggregated disbursements on Line 2 of Summary Schedule 17. Add Line 1 and Line 2 and enter the total on Line 3 of Summary Schedule 17 and in Item 52 (Political Activities) of Statement B.

SCHEDULE 18 – LOBBYING – Report the labor organization's direct and indirect disbursements to all entities and individuals during the reporting period associated with dealing with the executive and legislative branches of the Federal, state, and local governments and with independent agencies and staffs to advance the passage or defeat of existing or potential laws or the promulgation or any other action with respect to rules or regulations (including litigation expenses). It does not matter whether the lobbying attempt succeeds.

Enter in Column (A) the full name and business address of the entity or individual to which the disbursement was made. Do not abbreviate the name of the entity or individual.

Enter in Column (B) the type of business or job classification of the entity or individual, such as lobbyist, marketing firm, fund raiser, think tank, issue advocacy group, printing company, office supplies vendor, bookkeeper, receptionist, shop steward, legal counsel, etc.

Enter in Column (C) the purpose of the disbursement, which means a brief statement or description of the reason the disbursement was made. Examples of adequate descriptions include the following: advocating or opposing legislation (including litigation challenging such legislation), advocating or opposing regulations (including litigation challenging such regulations), etc. Distinguish between activities in the United States and activities in foreign countries.

Enter in Column (D) the date that the disbursement was made. The date of disbursement for reporting purposes is the date the labor organization actually disburses the money. The last day of the labor organization's fiscal year should be used for disbursements to officers and employees allocated from Column (J) of Schedules 11 (All Officers and Disbursements to Officers) and 12 (Disbursements to Employees).

Enter in Column (E) the amount of the disbursement.

Enter the total amount of major disbursements from the continuation pages on Line 1 of Summary Schedule 18. Enter the total amount of aggregated disbursements on Line 2 of Summary Schedule 18. Add Line 1 and Line 2 and enter the total on Line 3 of Summary Schedule 18 and in Item 53 (Lobbying) of Statement B.

SCHEDULE 19 – CONTRIBUTIONS, GIFTS, AND GRANTS – Report the labor organization's direct and indirect disbursements to all entities and individuals during the reporting period associated with contributions, gifts, and grants, other than those listed on Schedules 15 through 18 and 20.

Enter in Column (A) the full name and business address of the entity or individual to which the disbursement was made. Do not abbreviate the name of the entity or individual.

Enter in Column (B) the type of business or job classification of the entity or individual, such as charity, printing company, office supplies vendor, bookkeeper, legal counsel, etc.

Enter in Column (C) the purpose of the disbursement, which means a brief statement or description of the reason the disbursement was made. Examples of adequate descriptions include the following: medical research, community development, job retraining, education, etc.

Enter in Column (D) the date that the disbursement was made. The date of disbursement for reporting purposes is the date the labor organization actually disburses the money. The last day of the labor organization's fiscal year should be used for disbursements to officers and employees allocated from Column (J) of Schedules 11 (All Officers and

Disbursements to Officers) and 12 (Disbursements to Employees).

Enter in Column (E) the amount of the disbursement.

Enter the total amount of major disbursements from the continuation pages on Line 1 of Summary Schedule 19. Enter the total amount of aggregated disbursements on Line 2 of Summary Schedule 19. Add Line 1 and Line 2 and enter the total on Line 3 of Summary Schedule 19 and in Item 54 (Contributions, Gifts and Grants) of Statement B.

SCHEDULE 20 – BENEFITS - Report the labor organization's direct and indirect disbursements to all entities and individuals during the reporting period associated with direct and indirect benefits for officers, employees, members, and their beneficiaries. Benefit disbursements to be reported in schedule 20 include, for example, disbursements for life insurance, health insurance, and pensions. Do not include salary bonuses, severance payments, or payments for accrued vacation, which should be reported in column D of schedule 11 or 12.

Direct benefit disbursements are those made to officers, employees, members, and their beneficiaries from the labor organization's funds. Indirect benefit disbursements are those made from the labor organization's funds to a separate and independent entity, such as a trust or insurance company, which in turn and under certain conditions will pay benefits to the covered individuals. An example of an indirect benefit disbursement is the premium on group life insurance.

Enter in Column (A) the full name and business address of the entity or individual to which the disbursement was made. Do not abbreviate the name of the entity or individual.

Enter in Column (B) the type of business or job classification of the entity or individual, such as life insurance company, health insurance plan, etc.

Enter in Column (C) the purpose of the disbursement, which means a brief statement or description of the reason the disbursement was made. Examples of adequate descriptions include the following: insurance for members, insurance for officers and employees, etc.

Enter in Column (D) the date that the disbursement was made. The date of disbursement for reporting purposes is the date the labor organization actually disburses the money. The last day of the labor organization's fiscal year should be used for disbursements to officers and employees allocated from Column (J) of Schedules 11 (All Officers and Disbursements to Officers) and 12 (Disbursements to Employees).

Enter in Column (E) the amount of the disbursement.

Enter the total amount of major disbursements from the continuation pages on Line 1 of Summary Schedule 20. Enter the total amount of aggregated disbursements on Line 2 of Summary Schedule 20. Add Line 1 and Line 2 and enter the total on Line 3 of Summary Schedule 20 and in Item 55 (Benefits) of Statement B.

SCHEDULE 21 – GENERAL OVERHEAD – Report the labor organization's direct and indirect disbursements to all entities and individuals during the reporting period associated with general overhead that cannot be allocated to any of the other disbursement categories in Statement B.

Some disbursements for overhead do not support a specific function, so these disbursements should be reported in this schedule. Include support personnel at the labor organization's headquarters, such as building maintenance personnel and security guards, and other overhead costs. Not all support staff should be included in General Overhead. For

instance, the salary of an assistant, whenever possible, should be allocated at the same ratio as the person or persons to whom they provide support.

Enter in Column (A) the full name and business address of the entity or individual to which the disbursement was made. Do not abbreviate the name of the entity or individual.

Enter in Column (B) the type of business or job classification of the entity or individual, such as office supplies vendor, landlord, mortgage lender, janitor, receptionist, security guard, etc.

Enter in Column (C) the purpose of the disbursement, in sufficient detail to determine why the overhead disbursement cannot be allocated to another schedule.

Enter in Column (D) the date that the disbursement was made. The date of disbursement for reporting purposes is the date the labor organization actually disburses the money. The last day of the labor organization's fiscal year should be used for disbursements to officers and employees allocated from Column (J) of Schedules 11 (All Officers and Disbursements to Officers) and 12 (Disbursements to Employees).

Enter in Column (E) the amount of the disbursement.

Enter the total amount of major disbursements from the continuation pages on Line 1 of Summary Schedule 21. Enter the total amount of aggregated disbursements on Line 2 of Summary Schedule 21. Add Line 1 and Line 2 and enter the total on Line 3 of Summary Schedule 21 and in Item 56 (General Overhead) of Statement B.

SCHEDULE 22 – OTHER DISBURSEMENTS — Report the labor organization's direct and indirect disbursements to all entities and individuals during the reporting period associated with purposes that cannot be allocated to any other disbursement schedule.

Enter in Column (A) the full name and business address of the entity or individual to which the disbursement was made. Do not abbreviate the name of the entity or individual.

Enter in Column (B) the type of business or job classification of the entity or individual, such as printing company, office supplies vendor, bookkeeper, receptionist, shop steward, legal counsel, etc.

Enter in Column (C) the purpose of the disbursement in sufficient detail to determine why the disbursement cannot be allocated to another schedule.

Enter in Column (D) the date that the disbursement was made. The date of disbursement for reporting purposes is the date the labor organization actually disburses the money. The last day of the labor organization's fiscal year should be used for disbursements to officers and employees allocated from Column (J) of Schedules 11 (All Officers and Disbursements to Officers) and 12 (Disbursements to Employees).

Enter in Column (E) the amount of the disbursement.

Enter the total amount of major disbursements from the continuation pages on Line 1 of Summary Schedule 22. Enter the total amount of aggregated disbursements on Line 2 of Summary Schedule 22. Add Line 1 and Line 2 and enter the total on Line 3 of Summary Schedule 22 and in Item 57 (Other Disbursements) of Statement B.

STATEMENT A
ASSETS AND LIABILITIES

ASSETS

22. CASH — Enter the total of all the labor organization's cash on hand and on deposit at the start and end of the reporting period in Columns (A) and (B), respectively. Include all cash on hand, such as undeposited cash, checks, and money orders; petty cash; and cash in safe deposit boxes. Cash on deposit includes funds in banks, credit unions, and other financial institutions, such as checking accounts, savings accounts, certificates of deposit, and money market accounts. Also, include any interest credited to the labor organization's account during the reporting period.

NOTE: *The checking account balances reported should be obtained from the labor organization's books as reconciled with the balances shown on bank statements.*

23. ACCOUNTS RECEIVABLE — Enter the total of all accounts receivable due the labor organization at the start and end of the reporting period in Columns (A) and (B), respectively. Report any past due accounts receivable in Schedule 1 (Accounts Receivable Aging Schedule).

24. LOANS RECEIVABLE — Enter in Column (A) the total reported on Line 6, Column (B) of Schedule 2 (Loans Receivable). Enter in Column (B) the total reported on Line 6, Column (E) of Schedule 2.

25. U.S. TREASURY SECURITIES — Enter the total value of all U.S. Treasury securities as shown on the labor organization's books at the start and end of the reporting period in Columns (A) and (B), respectively. If the value reported is different from the original cost, the original cost must be reported in Item 68 (Additional Information). Other U.S. Government obligations, state and municipal bonds, and foreign government securities must be reported in Schedule 5 (Investments Other Than U.S. Treasury Securities) under "Marketable Securities" and in Item 26 (Investments).

26. INVESTMENTS — Enter in Column (A) the total book value at the start of the reporting period of all investments other than U.S. Treasury securities, which are reported in Item 25 (U.S. Treasury Securities). Enter in Column (B) the total reported on Line 7 of Schedule 5 (Investments Other Than U.S. Treasury Securities).

27. FIXED ASSETS — Enter in Column (A) the total value as shown on the labor organization's books at the start of the reporting period of all fixed assets, such as land, buildings, automobiles, and office furniture and equipment. Enter in Column (B) the total reported on Line 8, Column (D) of Schedule 6 (Fixed Assets).

28. OTHER ASSETS — Enter in Column (A) the total value as shown on the labor organization's books at the start of the reporting period of all assets not reported in Items 22 through 27. Enter in Column (B) the total reported on Line 7 of Schedule 7 (Other Assets).

29. TOTAL ASSETS — Add Items 22 through 28, Columns (A) and (B), and enter the respective totals in Item 29.

LIABILITIES

30. ACCOUNTS PAYABLE — Enter the total amount of the labor organization's accounts payable at the start and end of the reporting period in Columns (C) and (D), respectively. Ordinarily, accounts payable are those obligations incurred on an open account for goods and services rendered. Report any accounts payable past due by more than 90 days at the end of the reporting period in Schedule 8 (Accounts Payable Aging Schedule).

31. LOANS PAYABLE — Enter in Column (C) the total reported on Line 6, Column (B) of Schedule 9 (Loans Payable). Enter in Column (D) the total reported on Line 6, Column (E) of Schedule 9.

32. MORTGAGES PAYABLE — Enter

the total amount of the labor organization's obligations that were secured by mortgages or similar liens on real property (land or buildings) at the start and end of the reporting period in Columns (C) and (D), respectively.

33. OTHER LIABILITIES — Enter in Column (C) the total amount as shown on the labor organization's books at the start of the reporting period of all liabilities not reported in Items 30 through 32. Enter in Column (D) the total reported on Line 7 of Schedule 10 (Other Liabilities).

34. TOTAL LIABILITIES — Add Items 30 through 33, Columns (C) and (D), and enter the respective totals in Item 34.

35. NET ASSETS — Subtract Item 34 (Total Liabilities), Column (C) from Item 29 (Total Assets), Column (A) and enter the difference in Item 35, Column (C). Subtract Item 34, Column (D) from Item 29, Column (B) and enter the difference in Item 35, Column (D).

STATEMENT B RECEIPTS AND DISBURSEMENTS

Under Statement B, receipts must be recorded when money is actually received by the labor organization and disbursements must be recorded when money is actually paid out by the labor organization.

The purpose of Statement B is to report the flow of cash in and out of the labor organization during the reporting period. Transfers between separate bank accounts or between special funds of the labor organization, such as vacation or strike funds, do not represent the flow of cash in and out of the labor organization. Therefore, these transfers should not be reported as receipts and disbursements of the labor organization. For example, do not report a transfer of cash from the labor organization's savings account to its checking account. Likewise, the use of funds reported in Item 22 (Cash) to purchase certificates of deposit and the redemption of certificates of deposit should not be reported in Statement B.

Since Statement B reports all cash flowing in and out of the labor organization, "netting" is not permitted. "Netting" is the offsetting of receipts against disbursements and reporting only the balance (net) as either a receipt or disbursement. For example, if an officer received $5,000 from the labor organization for convention expenses, used only $800 and returned the remaining $4,200, the $5,000 disbursement must be reported in Schedule 11 (All Officers and Disbursements to Officers) and the appropriate disbursement Schedule 15 through 22, and the $200 receipt must be reported in Schedule 14 (Other Receipts). It would be incorrect to report only an $800 net disbursement to the officer.

Receipts and disbursements by an agent on behalf of the labor organization are considered receipts and disbursements of the labor organization and must be reported in the same detail as other receipts and disbursements. For example, if the labor organization owns a building managed by a rental agent, the agent's rental receipts and disbursements for expenses must be reported on the labor organization's Form LM-2. Also, if the labor organization's parent body or an intermediate body functions as an agent receiving and disbursing funds of the labor organization to third parties, these receipts and disbursements must be reported on the labor organization's Form LM-2.

CASH RECEIPTS

36. DUES AND OTHER PAYMENTS – Enter the total dues received by the labor organization. Include dues received directly by the organization from members, dues received from employers through a checkoff arrangement, and dues transmitted to the organization by a parent body or other affiliate. Report the full dues

received, including any portion that will later be transmitted to an intermediate or parent body as per capita tax. Also report in Item 36 payments in lieu of dues received from any nonmember employees as a condition of employment under a union security provision in a collective bargaining agreement.

If an intermediate or parent body receives dues checkoff directly from an employer on behalf of the reporting organization, do not report in Item 36 the portion retained by that organization for per capita tax or other purposes, such as a special assessment. Any amounts retained by the intermediate body or parent body other than per capita tax must be explained in Item 68. For example, if the intermediate body or parent body retained $500 of the reporting organization's dues checkoff as payment for supplies purchased from that body by the reporting organization, this should be explained in Item 68, but the $500 should not be reported as a receipt or disbursement on either organization's Form LM-2. If, however, the intermediate body or parent body disbursed part of the reporting organization's dues checkoff on that organization's behalf, this amount should be included in Item 36 and in the appropriate disbursement item on the reporting organization's Form LM-2. For example, if the intermediate body or parent body disbursed $500 of the reporting organization's dues checkoff to an attorney who had provided lobbying services to the reporting organization, this amount should be reported in Item 36 and as a disbursement in Item 53 (Lobbying) of the reporting organization's Form LM-2.

Do not report in Item 36 dues that the reporting organization collected on behalf of other organizations for transmittal to them. For example, if the reporting organization received dues from a member of an affiliate who worked in the reporting organization's jurisdiction, the dues collected on the affiliate's behalf must be reported in Item 65.

37. PER CAPITA TAX — Enter the total from Schedule 13, Line 9, Column (E).

38. FEES, FINES, ASSESSMENTS, WORK PERMITS — Enter the labor organization's receipts from fees, fines, assessments, and work permits. Receipts by the labor organization on behalf of affiliates for transmittal to them must be reported in Item 46 (On Behalf of Affiliates for Transmittal to Them).

39. SALE OF SUPPLIES — Enter the total amount received by the labor organization from the sale of supplies.

40. INTEREST — Enter the total amount of interest received by the labor organization from savings accounts, bonds, mortgages, loans, and all other sources.

41. DIVIDENDS — Enter the total amount of dividends from stocks and other investments received by the labor organization. Do not include "dividends" from credit unions, savings and loan associations, etc., which must be reported in Item 40 (Interest).

42. RENTS — Enter the total amount of rents received by the labor organization.

43. SALE OF INVESTMENTS AND FIXED ASSETS — Enter the total reported on Line 8 of Schedule 3 (Sale of Investments and Fixed Assets).

44. LOANS OBTAINED — Enter the total reported on Line 6, Column (C) of Schedule 9 (Loans Payable).

45. REPAYMENTS OF LOANS MADE — Enter the total reported on Line 6, Column (D)(1) of Schedule 2 (Loans Receivable).

46. ON BEHALF OF AFFILIATES FOR TRANSMITTAL TO THEM — Enter the total amount of dues, fees, fines, assessments, and work permit fees received by the labor organization, through a checkoff arrangement or otherwise, on behalf of affiliates for transmittal to them. Do not include the

amount withheld by the labor organization for per capita taxes or other purposes, such as loan repayments, which must be reported elsewhere in Statement B. When the receipts reported in Item 46 are transmitted the disbursement must be reported in related Item 65 (To Affiliates of Funds Collected on Their Behalf).

47. FROM MEMBERS FOR DISBURSEMENT ON THEIR BEHALF — Enter the total receipts from members which are specifically designated by them for disbursement on their behalf; for example, contributions from members for transmittal by the labor organization to charities. When receipts that are reported in Item 47 are transmitted, the disbursement must be reported in related Item 66 (On Behalf of Individual Members).

48. OTHER RECEIPTS — Enter the total reported on Summary Schedule 14, Line 3.

49. TOTAL RECEIPTS — Add Items 36 through 48 and enter the total in Item 49.

CASH DISBURSEMENTS

50. CONTRACT NEGOTIATION AND ADMINISTRATION – Enter the total from Summary Schedule 15, Line 3.

51. ORGANIZING – Enter the total from Summary Schedule 16, Line 3.

52. POLITICAL ACTIVITIES – Enter the total from Summary Schedule 17, Line 3.

53. LOBBYING – Enter the total from Summary Schedule 18, Line 3.

54. CONTRIBUTIONS, GIFTS, AND GRANTS – Enter the total from Summary Schedule 19, Line 3.

55. BENEFITS – Enter the total from Summary Schedule 20, Line 3.

56. GENERAL OVERHEAD – Enter the total from Summary Schedule 21, Line 3.

57. OTHER DISBURSEMENTS – Enter the total from Summary Schedule 22, Line 3.

58. PER CAPITA TAX — Enter the total from Schedule 13, Line 9, Column (F).

59. STRIKE BENEFITS – Enter the total amount of all disbursements made to, or on behalf of the members (or agency fee paying nonmembers) of the labor organization, and others, associated with strikes (including recognitional strikes), work stoppages and lockouts during the reporting period.

60. FEES, FINES, ASSESSMENTS, ETC. — Enter the total amount of fees, fines, assessments, and similar disbursements made by the labor organization to a parent body or other labor organization.

61. SUPPLIES FOR RESALE — Enter the labor organization's total disbursements for purchases of supplies for resale.

62. PURCHASE OF INVESTMENTS AND FIXED ASSETS — Enter the total reported on Line 8 of Schedule 4 (Purchase of Investments and Fixed Assets).

63. LOANS MADE — Enter the total reported on Line 6, Column (C) of Schedule 2 (Loans Receivable).

64. REPAYMENT OF LOANS OBTAINED — Enter the total reported on Line 6, Column (D)(1) of Schedule 9 (Loans Payable).

65. TO AFFILIATES OF FUNDS COLLECTED ON THEIR BEHALF — Enter the total disbursements of funds collected on behalf of affiliates by the labor organization. This amount usually is the same as the amount reported in related Item 46 (On Behalf of Affiliate for Transmittal to Them). Any such funds not disbursed by the end of the reporting

period are liabilities of the labor organization and must be reported in Schedule 10 (Other Liabilities).

66. ON BEHALF OF INDIVIDUAL MEMBERS — Enter the total disbursements of funds collected from members by the labor organization that were specifically designated by them for disbursement on their behalf. This amount usually is the same as the amount reported in related Item 47 (From Members for Disbursement on Their Behalf). Any such funds not disbursed by the end of the reporting period are liabilities of the labor organization and must be reported in Schedule 10 (Other Liabilities).

67. TOTAL DISBURSEMENTS — Add Items 50 through 66 and enter the total in Item 67.

NOTE: *The following worktable may be used to determine that the figures for receipts, disbursements, and cash are correctly reported on the labor organization's Form LM-2:*

A. Cash at Start of Reporting Period — Item 22, Column (A)	$
B. Add: Total Receipts — Item 49	$
C. Total of Lines A and B	$
D. Subtract: Total Disbursements — Item 67	$
E. Cash at End of Period	$

If Line E does not equal the amount reported in Item 22, Column (B), there is an error in the labor organization's report, which should be corrected.

ADDITIONAL INFORMATION AND SIGNATURES

68. ADDITIONAL INFORMATION — Use Item 68 to provide additional information as indicated on Form LM-2 and in these instructions. Enter the number of the item to which the information relates in the Item Number column. If there is not enough space in Item 68, report the additional information on a separate letter-size page(s). Be sure to include the following at the top of each page: the name of the labor organization, its 6-digit file number as reported in Item 1, and the ending date of the reporting period as reported on the second line of Item 2.

69-70. SIGNATURES — The completed Form LM-2 that is filed with OLMS must be signed by both the president and treasurer, or corresponding principal officers, of the labor organization. If an officer other than the president or treasurer performs the duties of the principal executive or principal financial officer, the other officer may sign the report. If an officer other than the president or treasurer signs the report, enter the correct title in Item 69 or 70, and explain in Item 68 (Additional Information) why the president or treasurer did not sign the report. OLMS has implemented a system to permit union officers to sign electronically submitted forms with digital signatures. Information about this system can be obtained on the OLMS website at http://www.dol.gov/esa/regs/compliance/olms/digital-signatures.htm.

Enter the date the report was signed and the telephone number at which the signatories conduct official business; a private, unlisted telephone number does not have to be reported. On a paper Form LM-2 submitted pursuant to an exemption, original signatures are required; stamped or mechanical signatures are not acceptable.

XII. LABOR ORGANIZATIONS THAT HAVE CEASED TO EXIST

If the labor organization has gone out of existence as a reporting labor organization, the last president and treasurer or the officials responsible for winding up the affairs of the labor organization must file a terminal financial report for the period from the beginning of

the fiscal year to the date of termination. A terminal financial report must be filed if the labor organization has gone out of business by disbanding, merging into another organization, or being merged and consolidated with one or more labor organizations to form a new labor organization. A terminal financial report is not required if the labor organization changed its affiliation but continues to function as a separate reporting labor organization.

The terminal financial report must be filed on Form LM-2 if the labor organization filed its previous annual report on Form LM-2 and must be submitted within 30 days after the date of termination to the following address:

U.S. Department of Labor
Employment Standards Administration
Office of Labor-Management Standards
200 Constitution Avenue, N.W.
Room N-5616
Washington, DC 20210-0001

To complete a terminal report on Form LM-2, follow the instructions in Section XI and, in addition:

- Enter the date the labor organization ceased to exist in Item 2 after the word "Through."

- Enter an "X" in the box in Item 3(c) indicating that the labor organization ceased to exist during the reporting period and that this is the labor organization's terminal Form LM-2.

- Enter "3(c)" in the Item Number column in Item 68 (Additional Information) and provide a detailed statement of the reason the labor organization ceased to exist. Also report in Item 68 plans for the disposition of the labor organization's cash and other assets, if any (for example, transfer of cash and assets to the parent body). Provide the name and address of the person or organization that will retain the records of the terminated organization. If the labor organization merged with another labor organization, report that organization's name, address, and 6-digit file number.

Contact the nearest OLMS field office listed below if you have questions about filing a terminal report.

If You Need Assistance

The Office of Labor-Management Standards has field offices located in the following cities to assist you if you have any questions concerning LMRDA and CSRA reporting requirements.

Atlanta, GA
*Birmingham, AL
Boston, MA
Buffalo, NY
Chicago, IL
Cincinnati, OH
Cleveland, OH
Dallas, TX
Denver, CO
Detroit, MI
*Grand Rapids, MI
Guaynabo, PR
Honolulu, HI
*Houston, TX
Kansas City, MO
Los Angeles, CA
Miami (Ft. Lauderdale), FL
Milwaukee, WI
Minneapolis, MN
Nashville, TN
*New Haven, CT
New Orleans, LA
New York, NY
*Newark (Iselin), NJ
Philadelphia, PA
Pittsburgh, PA
St. Louis, MO
San Francisco, CA
Seattle, WA
*Tampa, FL
Washington, DC

Consult local telephone directory listings under United States Government, Labor Department, Office of Labor-Management

Standards, for the address and telephone number of the nearest field office.

*These OLMS field offices do not maintain copies of reports for public disclosure.

Information about OLMS, including key personnel and telephone numbers, how to obtain LM reports, compliance assistance materials, the text of the LMRDA, and related Federal Register and Code of Federal Regulations (CFR) documents, is also available on the Internet at:

http://www.olms.dol.gov

U.S. Department of Labor
Employment Standards Administration
Office of Labor-Management Standards
Washington, DC 20210

FORM T-1 TRUST ANNUAL REPORT

MUST BE USED BY ALL UNIONS INTERESTED IN A TRUST

Form Approved
Office of Management and Budget
No. xxxxxxxx
Expires: xx-xx-xxxx

This report is mandatory under P.L. 86-257, as amended. Failure to comply may result in criminal prosecution, fines, or civil penalties as provided by 29 U.S.C. 439 or 440.

READ THE INSTRUCTIONS CAREFULLY BEFORE PREPARING THIS REPORT.

For Official Use Only	1. FILE NUMBERS	2. PERIOD COVERED	3.
	UNION a) ___ – ___ TRUST b) ___ – ___	MO DAY YEAR From ___ ___ ___ Through ___ ___ ___	(a) AMENDED - If this is an amended report, check here: ☐ (b) HARDSHIP - If filing under the hardship procedures, check here: ☐ (c) TERMINAL - If this is a terminal report, check here: ☐

4. NAME OF UNION		10. NAME OF TRUST	
5. DESIGNATION (Local, Lodge, etc.)	6. DESIGNATION NUMBER	11. TAX STATUS OF TRUST	
7. UNIT NAME OF UNION (if any)		12. PURPOSE OF TRUST	
8. MAILING ADDRESS OF UNION (use capital letters)		13. MAILING ADDRESS OF TRUST (use capital letters)	
Last Name	First Name	Last Name	First Name
P.O. Box - Building and Room Number (if any)		P.O. Box - Building and Room Number (if any)	
Number and Street		Number and Street	
City		City	
State	Zip Code + 4	State	Zip Code + 4
9. Are the union's records kept at its mailing address? (If "No," provide address in Item 22.)	YES ☐ NO ☐	14. Are the trust's records kept at its mailing address? (If "No," provide address in Item 22.)	YES ☐ NO ☐

Each of the undersigned, duly authorized officers of the above labor organization, declares, under the applicable penalties of law, that all of the information submitted in this report (including the information contained in any accompanying documents) has been examined by the signatory and is, to the best of the undersigned's knowledge and belief, true, correct, and complete.

23. SIGNED:_____ PRESIDENT

___/___/___ Date ( ) - Telephone Number

24. SIGNED:_____ TREASURER

___/___/___ Date ( ) - Telephone Number

UNION FILE NUMBER a): ☐☐☐ – ☐☐☐

TRUST FILE NUMBER b): ☐☐☐ – ☐☐☐

Complete Items 15 Through 21

15. During the reporting period did the trust discover any loss or shortage of funds or other property? *(Answer "Yes" even if there has been repayment or recovery.)* ☐ YES ☐ NO

16. During the reporting period did the trust acquire or dispose of any goods or property in any manner other than by purchase or sale? ☐ YES ☐ NO

17. During the reporting period did the trust liquidate, reduce or write-off any liabilities without disbursement of cash? ☐ YES ☐ NO

(If the answer to any of the above is "Yes," provide details in Item 22 on this page as explained in the instructions for each item.)

18. Enter the total assets of the trust at the end of the reporting period. $

19. Enter the total liabilities (debts) of the trust at the end of the reporting period. $

20. Enter the total receipts of the trust during the reporting period. $

21. Enter the total disbursements of the trust during the reporting period. $

Please be sure to:

* Enter your labor organization's 6-digit file number in item 1.
* Have your labor organization's president and treasurer sign the Form T-1 in Items 23 and 24.
* Complete Schedules 1 through 4

22. ADDITIONAL INFORMATION *(if more space is needed, attach additional pages properly identified.)*

Item #	

SCHEDULE 1 - INDIVIDUALLY IDENTIFIED RECEIPTS

(List all entities from whom the trust received a total of $10,000 or more during the reporting period.)

UNION FILE NUMBER a): ___ - ___

TRUST FILE NUMBER b): ___ - ___

Page _____ of _____

Enter Whole Dollar Amounts Only - Do Not Enter Cents

LEGAL NAME AND BUSINESS ADDRESS (A)	TYPE OF BUSINESS OR JOB CLASSIFICATION (B)	PURPOSE OF THE RECEIPT (C)	DATE (D)	AMOUNT (E)

SUBTOTAL (CURRENT PAGE ONLY)	
TOTAL (ALL PAGES)	

SCHEDULE 2 - INDIVIDUALLY IDENTIFIED DISBURSEMENTS

(List all entities that received $10,000 or more in total disbursements from the trust during the reporting period.)

UNION FILE NUMBER a): ___ – ___

TRUST FILE NUMBER b): ___ – ___

Page _____ of _____

Enter Whole Dollar Amounts Only - Do Not Enter Cents

LEGAL NAME AND BUSINESS ADDRESS (A)	TYPE OF BUSINESS OR JOB CLASSIFICATION (B)	PURPOSE OF THE DISBURSEMENT (C)	DATE (D)	AMOUNT (E)

SUBTOTAL (CURRENT PAGE ONLY)	
TOTAL (ALL PAGES)	

Form T-1 (2002)

SCHEDULE 3— DISBURSEMENTS TO OFFICERS AND EMPLOYEES OF THE TRUST

UNION FILE NUMBER a): ___ - ___

TRUST FILE NUMBER b): ___ - ___

Page _____ of _____

	A	B	C	D	E	F	G	H
Full Name	LAST, FIRST, MIDDLE INITIAL	Salary Disbursements	All Taxes Disbursed	Disbursements for Other Deductions	Allowances	Disbursements for Official Business	Other Disbursements	TOTAL
Title	Treasurer, Trustee, Attorney, etc.							
1. Full Name								
Title								
2. Full Name								
Title								
3. Full Name								
Title								
4. Full Name								
Title								
5. Full Name								
Title								
6. Full Name								
Title								
7. Full Name								
Title								
8. Full Name								
Title								
9. Full Name								
Title								
10. Total Disbursements (Total of Lines 1 through 9)								

SCHEDULE 4 — LOANS RECEIVABLE

UNION FILE NUMBER a): ___ – ___

TRUST FILE NUMBER b): ___ – ___

Page _____ of _____

Enter Whole Dollar Amounts Only - Do Not Enter Cents

List below loans to officers, employees, or members which at any time during the reporting period exceeded $250. (A)	Loans Outstanding at Start of Period (B)	Loans Made During Period (C)	Repayments Received During Period		Loans Outstanding at End of Period (E)
			Cash (D)(1)	Other Than Cash (D)(2)	
1. Name: _____ Purpose: _____ Security: _____ Terms of Repayment: _____					
2. Name: _____ Purpose: _____ Security: _____ Terms of Repayment: _____					
3. Name: _____ Purpose: _____ Security: _____ Terms of Repayment: _____					
4. Name: _____ Purpose: _____ Security: _____ Terms of Repayment:					
5. Totals from additional pages (if any).					
6. Totals of Lines 1 through 5.					

Form T-1 (2002)

Public reporting burden for this collection of information is estimated to average 12 hours 53 minutes per response in the first year, 5 hours 47 minutes per response in the second year, and 5 hours 9 minutes per response in the third year. This includes the time for reviewing instructions, searching existing data sources, gathering and maintaining data needed, and completing and reviewing the collection of information. Persons are not required to respond to the collection of information unless it displays a currently valid OMB control number. Reporting of this information is mandatory and is required by the Labor-Management Reporting and Disclosure Act of 1959, as amended, for the purpose of public disclosure. As this is public information, there are no assurances of confidentiality. If you have any comments regarding this estimate or any other aspect of this information collection, including suggestions for reducing this burden, please send them to the U.S. Department of Labor, Employment Standards Administration, Office of Labor-Management Standards, Division of Interpretations and Standards, Room N-5605, 200 Constitution Avenue, NW, Washington, DC 20210.

INSTRUCTIONS FOR FORM T-1 TRUST ANNUAL REPORT

Proposed Instructions

GENERAL INSTRUCTIONS

I. WHO MUST FILE

Every labor organization subject to the Labor-Management Reporting and Disclosure Act, as amended (LMRDA), the Civil Service Reform Act (CSRA), or the Foreign Service Act (FSA), with total annual receipts of $200,000, must file Form T-1 each year for each trust in which it is interested, as defined in the LMRDA at 29 U.S.C. 402(l), if the union's financial contribution to the trust, or a contribution made on the union's behalf or as a result of a negotiated agreement to which the union is a party, was $10,000 or more during the reporting year. No Form T-1 should be filed for any labor organization that already files a Form LM-2, -3, or -4, nor should a report be filed for any entity that is expressly exempted from reporting in the Act. No separate report need be filed for Political Action Committee (PAC) funds if publicly available reports on the PAC funds are filed with a Federal or state agency, or for a political organization for which reports are filed with the Internal Revenue Service pursuant to 26 U.S.C. 527. No separate report is required for an employee benefit plan that filed a complete and timely annual report pursuant to the requirements of the Employee Retirement Income Security Act of 1974 (ERISA), 29 U.S.C. 1023, 1024(a), and 1030, and 29 C.F.R. 2520.103-1, for the plan year ending with or within the year preceding the year covered by the reporting union's LM-2, or if annual audits are freely available on demand under § 302(c)(5)(B) of the LMRA, 29 U.S.C.186(c)(5)(B).

This form must be filed with the Office of Labor-Management Standards (OLMS) of the U.S. Department of Labor's (Department) Employment Standards Administration. The labor organization must file a separate Form T-1 for each trust that meets the above requirements. The LMRDA, CSRA, and FSA cover labor organizations that represent employees who work in private industry, employees of the U.S. Postal Service, and most Federal government employees. Questions about whether a labor organization is required to file should be referred to the nearest OLMS field office listed on page XX of these instructions.

II. WHEN TO FILE

Form T-1 must be filed within 90 days of the end of the trust's fiscal year. The penalties for delinquency are described in Section VI (Officer Responsibilities And Penalties) of these instructions.

If a trust for which a labor organization was required to file a Form T-1 goes out of existence, a terminal financial report must be filed within 30 days after the date it ceased to exist. Similarly, if a trust for which a labor organization was required to file a Form T-1 continues in existence, but the labor organization's interest in that trust ceases, a terminal financial report must be filed within 30 days after the date that the labor organization's interest in the trust ceased. See Section IX (Trusts Which Have Ceased to Exist) of these instructions for information on filing a terminal financial report.

III. How to File

Form T-1 must be prepared using software obtained from the Department and must be submitted electronically to the Department. A Form T-1 filer will be able to file a report in paper format only if it applies for and is granted a continuing hardship exemption of up to one-year, but a paper format copy may be submitted initially if the filer asserts a temporary hardship and files electronically thereafter.

A detailed user manual for the electronic filing software is included on the CD-ROM accompanying the report package.

HARDSHIP EXEMPTIONS

A labor organization that must file Form T-1 may assert a temporary hardship exemption or apply for a continuing hardship exemption to prepare and submit the report in paper format. If a labor organization files both Form LM-2 and Form T-1, the exemption must be asserted for each report, although in appropriate circumstances the same reasons may be used to support both exemptions. If it is possible to file Form LM-2, or one or more Form T-1s electronically, no exemption should be claimed for those reports, even though an exemption is warranted for a related report.

TEMPORARY HARDSHIP EXEMPTION:

If the labor organization experiences unanticipated technical difficulties that prevent the timely preparation and submission of an electronic filing of Form T-1, it may be filed in paper format by the required due date. An electronic format copy of the filed paper format document shall be submitted to the Department within ten business days. Indicate in Item 3 (Amended, Hardship Exempted, or Terminal Report) that the labor organization is filing this form under the hardship exemption procedures. Unanticipated technical difficulties that may result in additional delays should be brought to the attention of the OLMS Division of Interpretations and Standards, which can be reached at the above address, by email at olms-mail@dol-esa.gov, by phone at 202-693-0123, or by fax at 202-693-1340.

Note: *If either the paper filing or the electronic filing is not received in the timeframe specified above, the report will be considered delinquent.*

CONTINUING HARDSHIP EXEMPTION:

(a) The labor organization may apply in writing for a continuing hardship exemption if Form T-1 cannot be filed electronically without undue burden or expense. Such written application shall be received at least thirty days prior to the required due date of the report(s). The written application shall contain the information set forth in paragraph (b).

The application must be mailed to the following address:

U.S. Department of Labor
Employment Standards Administration
Office of Labor-Management Standards
200 Constitution Avenue, N.W.
Room N-5605
Washington, DC 20210-0001

Questions regarding the application should be directed to the OLMS Division of Interpretations and Standards, which

can be reached at the above address, by email at olms-mail@dol-esa.gov, by phone at 202-693-0123, or by fax at 202-693-1340.

(b) The request for the continuing hardship exemption shall include, but not be limited to, the following: (1) the justification for the requested time period of the exemption; (2) the burden and expense that the union would incur if it was required to make an electronic submission; and (3) the reasons for not submitting the report(s) electronically. The applicant must specify a time period not to exceed one year.

(c) The continuing hardship exemption shall not be deemed granted until the Department notifies the applicant in writing. If the Department denies the application for an exemption, the labor organization shall file the report(s) in electronic format by the required due date. If the Department determines that the grant of the exemption is appropriate and consistent with the public interest and the protection of union members and so notifies the applicant, the labor organization shall follow the procedures set forth in paragraph (d).

(d) If the request is granted, the labor organization shall submit the report(s) in paper format by the required due date. The filer may be required to submit Form T-1 in electronic format upon the expiration of the period for which the exemption is granted. Indicate in Item 3 (Amended, Hardship Exempted, or Terminal Report) that the labor organization is filing under the hardship exemption procedures.

Note: *If either the paper filing or the electronic filing is not received in the timeframe specified above, the report will be considered delinquent.*

SPECIAL INSTRUCTIONS FOR SUBMITTING FORM T-1 IN PAPER FORMAT:

Those labor organizations that are granted an exemption will be provided with a report package in paper format, which must be completed and filed at the following address:

U.S. Department of Labor
Employment Standards Administration
Office of Labor-Management Standards
200 Constitution Avenue, N.W.
Room N-5616
Washington, DC 20210-0001

Number of Copies

Complete one of the two blank copies included in the report package; do not use a photocopy of the form. The completed report must be filed with OLMS. A copy should also be maintained in the labor organization's records.

Information Entry

Entries on the report should be typed or clearly printed in black ink. Do not use a pencil or any other color ink.

For items displaying separate boxes, enter only one letter or number in each box as illustrated below. Use all capital letters and print or type inside the boxes. Leave a blank box between words and/or numbers as appropriate. Print clearly so the information can be accurately scanned.

Entering Number and Street:

1404 REDWOOD COURT

In all Items and Schedules dealing with monetary values, report amounts in dollars only. Do not enter cents. Round cents to the nearest dollar. Enter a single "0" in the boxes for reporting dollars if the labor organization has nothing to report.

Entering Dollars:

$1,573,844 – do not enter cents

Entering Zero:

$ _, _ _ _, _ _ 0

For items requiring a "Yes" or "No" answer, enter an "X" in the appropriate box. Do not use check marks or other marks.

Entering X:

Yes	No
X	

Schedules 1 Through 4 Continuation Pages

If there is not enough space to report all the required information and amounts in Schedules 1 and 2, report any additional information and amounts on the copies of the schedules that are included in the report package. Ten copies of each schedule are provided for this purpose. More copies of these schedules may be ordered from any OLMS office.

If there is not enough space to report all the required information in Schedules 3 and 4, report additional information on the preprinted continuation pages that are included in the report package. Two copies of such pages are included for this purpose. More copies of these continuation pages may be ordered from any OLMS office.

In the space provided at the top of the page, enter: the 6-digit file numbers of the labor organization and the trust as reported in Item 1 (File Number), the page number for each continuation page, and the total number of additional pages attached. Totals from any additional pages must be entered on the line provided in each schedule.

Additional Pages

Some of the items on the report require that further details be provided in Item 22 (Additional Information). If there is not enough space in Item 22, enter the additional information on a separate letter-size page(s), giving the number of the item to which the information applies. At the top of the page, enter: the 6-digit file numbers of the labor organization and the trust as reported in Item 1 (File Number), the page number for each continuation page, and the total number of additional pages attached.

IV. Public Disclosure

The LMRDA requires that the Department make reports filed by labor organizations available for inspection by the public. Reports may be viewed and downloaded from the OLMS website at http://union-reports.dol.gov. Reports may also be examined and copies purchased at the OLMS Public Disclosure Room (202-693-0125) at the following address or at the OLMS field office in whose jurisdiction the reporting organization is located. See page XX of these instructions for a list of OLMS field offices.

U.S. Department of Labor
Employment Standards Administration
Office of Labor-Management Standards
200 Constitution Avenue, NW
Room N-5608
Washington, DC 20210-0001

V. Officer Responsibilities and Penalties

The president and treasurer or the corresponding principal officers of the labor organization required to sign Form T-1 are personally responsible for its filing and accuracy. Under the LMRDA, officers are subject to criminal penalties for willful failure to file a required report and for false reporting. False reporting includes making any false statement or misrepresentation of a material fact while knowing it to be false, or for knowingly failing to disclose a material fact in a required report or in the information required to be contained in the report or in any information required to be submitted with it. Under the CSRA and FSA and implementing regulations, false reporting

and failure to report may result in administrative enforcement action and litigation. The officers responsible for signing Form T-1 are also subject to criminal penalties for false reporting under Section 1001 of Title 18 of the United States Code.

The reporting labor organization and the officers required to sign Form T-1 are also subject to civil prosecution for violations of the filing requirements. According to Section 210 of the LMRDA (29 U.S.C. 440), "whenever it shall appear that any person has violated or is about to violate any of the provisions of this title, the Secretary may bring a civil action for such relief (including injunctions) as may be appropriate."

VI. Recordkeeping

The officers required to file Form T-1 are responsible for maintaining records that will provide in sufficient detail the information and data necessary to verify the accuracy and completeness of the report. The records must be kept for at least 5 years after the date the report is filed. Any record necessary to verify, explain or clarify the report must be retained, including, but not limited to, vouchers, worksheets, receipts, applicable resolutions, and any electronic documents used to complete and file the report.

SPECIAL INSTRUCTIONS FOR CERTAIN ORGANIZATIONS

VII. Labor Organizations in Trusteeship

Any labor organization that has placed a subordinate labor organization in trusteeship is responsible for filing the subordinate's annual financial reports. This obligation includes the requirement to file Form T-1 for any trusts in which the subordinate labor organization is interested. A trusteeship is defined in section 3(h) of the LMRDA (29 U.S.C. 402) as "any receivership, trusteeship, or other method of supervision or control whereby a labor organization suspends the autonomy otherwise available to a subordinate body under its constitution or bylaws."

The report must be signed by the president and treasurer or corresponding principal officers of the labor organization that imposed the trusteeship and by the trustees of the subordinate labor organization. Trustees must sign and date Form T-1 in the space below the officers' signatures and telephone numbers in Items 23 and 24 (Signatures).

VIII. Completing Form T-1

ITEMS 1 THROUGH 17

Answer Items 1 through 17 as instructed. Enter an "X" in the appropriate box for those questions requiring a "Yes" or "No" answer; do not leave both boxes blank.

1. FILE NUMBER — Enter in "(a)" the 6-digit file number that OLMS assigned to the labor organization. If the labor organization does not have the number on file and cannot obtain the number from prior reports filed with the Department, contact the nearest OLMS field office listed on page XX of these instructions to obtain the labor organization's file number. The labor organization's 6-digit file number must also be entered in the File Number boxes at the top of pages 2 through 6 of Form T-1.

Enter in "(b)" the 6-digit file number that OLMS assigned to the trust. For an initial filing of a Form T-1, this number may be obtained by contacting OLMS at the following address:

U.S. Department of Labor
Employment Standards Administration
Office of Labor-Management Standards
200 Constitution Avenue, N.W.
Room N-5616
Washington, DC 20210-0001

For future filings, if the labor organization does not have the number on file and cannot obtain the number from the trust or from prior reports filed with the Department, contact the nearest OLMS field office listed on page XX of these instructions to obtain the trust's file number. The trust's 6-digit file number must also be entered in the File Number boxes at the top of pages 2 through 6 of Form T-1.

2. PERIOD COVERED — Enter the beginning and ending dates of the period covered by this report. The report should never cover more than a 12-month period. For example, if the trust's 12-month fiscal year begins on January 1 and ends on December 31, enter these dates as 01/01/20XX and 12/31/20XX. It would be incorrect to enter January 1 of one year through January 1 of the next year.

If the fiscal year changed, enter in Item 2 (Period Covered) the ending date for the period of less than 12 months, which is the new fiscal year ending date, and report in Item 22 (Additional Information) that the trust changed its fiscal year. For example, if the fiscal year ending date changes from June 30 to December 31, a report must be filed for the partial year from July 1 to December 31. Thereafter, the annual report should cover a full 12-month period from January 1 to December 31.

3. AMENDED, HARDSHIP EXEMPTED, OR TERMINAL REPORT — Enter an "X" in the box in Item 3(a) if the labor organization is filing an amended Form T-1 correcting a previously filed Form T-1. Enter an "X" in the box in Item 3(b) if the labor organization is filing under the hardship exemption procedures defined in Section IV. Enter an "X" in the box in Item 3(c) if the trust has gone out of business by disbanding, merging into another organization, or being merged and consolidated with one or more trusts to form a new trust, and this is the trust's terminal report. Be sure the date the trust ceased to exist is entered in Item 2 (Period Covered) after the word "Through." See Section X (Trusts Which Have Ceased to Exist) of these instructions for more information on filing a terminal report.

4. AFFILIATION OR ORGANIZATION NAME — Enter the name of the national or international labor organization that granted the labor organization a charter.

If the labor organization has no such affiliation, enter the name of the labor organization as currently identified in the labor organization's constitution and bylaws or other organizational documents.

5. DESIGNATION — Enter the specific designation that is used to identify the labor organization, such as Local, Lodge, Branch, Joint Board, Joint Council, District Council, etc.

6. DESIGNATION NUMBER — Enter the number or other identifier, if any, by which the labor organization is known.

7. UNIT NAME — Enter any additional or alternate name by which the labor organization is known, such as "Chicago Area Local."

8. MAILING ADDRESS OF UNION— Enter the current address where mail is most likely to reach the labor organization as quickly as possible. Be sure to indicate the first and last name of the person, if any, to whom such mail should be sent and include any building and room number.

9. PLACE WHERE UNION RECORDS ARE KEPT — If the records required to be kept by the labor organization to verify this report are kept at the address reported in Item 8 (Mailing Address of Union), answer "Yes." If not, answer "No" and provide in Item 22 (Additional Information) the address where the labor organization's records are kept.

10. NAME OF TRUST — Enter the name of the trust.

11. TAX STATUS OF TRUST — Enter the tax status of the trust. For instance, a nonprofit trust may have a 501(C)(3) tax designation.

12. PURPOSE — Enter the purpose of the trust. For example, if the trust is a credit union that provides loans to union members, the purpose may be "credit union."

13. MAILING ADDRESS OF TRUST — Enter the current address where mail is most likely to reach the trust as quickly as possible. Be sure to indicate the first and last name of the person, if any, to whom such mail should be sent and include any building and room number.

14. PLACE WHERE TRUST RECORDS ARE KEPT — If the records required to be kept by the labor organization to verify this report are kept at the address reported in Item 13 (Mailing Address of Trust), answer "Yes." If not, answer "No" and provide in Item 22 (Additional Information) the address where the trust's records are kept. The labor organization need not keep separate copies of these records at its own location, as long as members have the same access to such records from the trust as they would be entitled to have from the labor organization.

Note: The president and treasurer of the labor organization are liable for maintaining the records used to prepare the report.

15. LOSSES OR SHORTAGES — Answer "Yes" to Item 15 if the trust experienced a loss, shortage, or other discrepancy in its finances during the period covered. Describe the loss or shortage in detail in Item 22 (Additional Information), including such information as the amount of the loss or shortage of funds or a description of the property that was lost, how it was lost, and to what extent, if any, there has been an agreement to make restitution or any recovery by means of repayment, fidelity bond, insurance, or other means.

16. ACQUISITION OR DISPOSITION OF PROPERTY — If Item 16 is answered "Yes," describe in Item 22 (Additional Information) the manner in which the trust acquired or disposed of property, such as donating office furniture or equipment to charitable organizations, trading in assets, or giving away other tangible property of the trust. Include the type of property, its value, and the identity of the recipient or donor, if any. Also report in Item 22 the cost or other basis at which any acquired assets were entered on the trust's books or the cost or other basis at which any assets disposed of were carried on the trust's books.

For assets that were traded in, enter in Item 22 the cost, book value, and trade-in allowance.

17. LIQUIDATION OF LIABILITIES – If Item 17 is answered "Yes," provide in Item 22 (Additional Information) all details in connection with the liquidation, reduction, or writing off of the trust's liabilities without the disbursement of cash.

FINANCIAL DETAILS

REPORT ONLY DOLLAR AMOUNTS

Report all amounts in dollars only. Round cents to the nearest dollar. Amounts ending in $.01 through $.49 should be rounded down. Amounts ending in $.50 through $.99 should be rounded up.

Enter a single "0" in the boxes for items requiring a dollar amount if there is nothing to report.

REPORTING CLASSIFICATIONS

Complete all items and lines on the form as given. Do not use different accounting classifications or change the wording of any item or line.

ITEMS 18 THROUGH 21

18. ASSETS – Enter the total value of all the trust's assets at the end of the reporting period including, for example, cash on hand and in banks, property, loans owed to the trust, investments, office furniture, automobiles, and anything else owned by the trust. Enter "0" if the trust had no assets at the end of the reporting period.

19. LIABILITIES – Enter the total amount of all the trust's liabilities at the end of the reporting period including, for example, unpaid bills, loans owed, total amount of mortgages owed, and other debts of the trust. Enter "0" if the trust had no liabilities at the end of the reporting period.

20. RECEIPTS – Enter the total amount of all receipts of the trust during the reporting period including, for example, interest, dividends, rent, money from the sale of assets, and loans received by the trust. Enter "0" if the trust had no receipts during the reporting period.

21. DISBURSEMENTS – Enter the total amount of all disbursements made by the trust during the reporting period including, for example, payments to officers and employees of the trust, payments for administrative expenses, loans made by the trust, and taxes paid. Enter "0" if the trust made no disbursements during the reporting period.

SCHEDULES 1 THROUGH 4

SCHEDULES 1 AND 2 – RECEIPTS AND DISBURSEMENTS

Schedules 1 and 2 provide detailed information on the financial operations of the trust. These schedules will be populated for the filer by the electronic filing software as long as the trust uses a properly configured electronic recordkeeping system that is compatible with the software provided by the Department. The Department's software will be compatible with all commonly used electronic recordkeeping systems. The system will determine whether a receipt or disbursement will be individually identified or aggregated. The operations of the electronic filing software are described in the user manual.

All "major" receipts during the reporting period must be separately identified in Schedule 1. A "major" receipt includes: 1) any individual receipt of $10,000 or more; or 2) total receipts from any single entity or individual that aggregate to $10,000 or more during the reporting period. This process is discussed further below.

All "major" disbursements during the reporting period must be separately identified in Schedule 2. A "major" disbursement includes: 1) any individual disbursement of $10,000 or more; or 2) total disbursements to any single entity or individual that aggregate to $10,000 or more during the reporting period. This process is discussed further below.

Note: Disbursements to officers and employees of the trust who received more than $10,000 from the trust during the reporting period should be reported in Schedule 3, and need not also be reported in Schedule 2.

Example 1: The trust has an ongoing contract with a law firm that provides a wide range of legal services to which a single payment of $10,000 is made each month. Each payment would be listed in Schedule 2.

Example 2: The trust received a settlement of $14,000 in a small claims lawsuit. The receipt would be individually identified in Schedule 1.

Example 3: The trust made three payments of $4,000 each to an office supplies vendor for office supplies during the reporting period. The $12,000 in disbursements to the vendor would be identified in Schedule 2.

Procedures for Completing Schedules 1 and 2

For each major receipt/disbursement, provide the full name and business address of the entity or individual, type of business or job classification of the entity or individual, purpose of the receipt/disbursement, date, and amount of the receipt/disbursement. Receipts/disbursements must be listed in chronological order; aggregated receipts/disbursements should be listed as having occurred on the last day of the reporting period.

Enter in Column (A) the full name and business address of the entity or individual from which the receipt was received or to which the disbursement was made. Do not abbreviate the name of the entity or individual.

Enter in Column (B) the type of business or job classification of the entity or individual, such as printing company, office supplies vendor, lobbyist, think tank, marketing firm, bookkeeper, receptionist, shop steward, legal counsel, union member, etc.

Enter in Column (C) the purpose of the receipt/disbursement, which means a brief statement or description of the reason the receipt/disbursement was made.

Enter in Column (D) the date that the receipt/disbursement was made. The date of receipt/disbursement for reporting purposes is the date the trust actually receives or disburses the money, rather than the date that the right to receive, or the obligation to disburse, is incurred. As noted above, aggregated receipts/disbursements shall be reported on the last day of the reporting period.

Enter in Column (E) the amount of the receipt/disbursement.

SCHEDULE 3 – DISBURSEMENTS TO OFFICERS AND EMPLOYEES OF THE TRUST – Report all direct and indirect disbursements to officers and employees of the trust who received more than $10,000 in gross salaries, allowances, and other direct and indirect disbursements from the trust during the reporting period.

NOTE: *A "direct disbursement" to an officer or employee is a payment made by the trust to the officer or employee in the form of cash, property, goods, services, or other things of value.*

An "indirect disbursement" to an officer or employee is a payment made by the trust to another party for cash, property, goods, services, or other things of value received by or on behalf of the officer or employee. "On behalf of the officer or employee" means received by a party other than the officer or employee of the trust for the personal interest or benefit of the officer or employee. Such payments include payments made by the trust for charges on an account of the trust for credit extended to or purchases by, or on behalf of, the officer or employee.

Column A: Enter in the boxes in Column (A), the last name, first name, and middle initial of all persons who received $10,000 or more in total disbursements from the trust during the reporting period, as well as the title or the position held by each officer or employee listed. If an officer or employee held more than one position during the reporting period, list each position and the dates during which the person held the position.

Column (B): Enter the total of all net salary disbursements during the reporting period for the salary of each officer or employee.

Column (C): Enter the total of all disbursements during the reporting period for the transmittal of taxes paid on behalf of the officer or employee, including withholding taxes and direct taxes.

Withholding taxes include all disbursements to federal, state, county

and municipal government agencies for the transmittal of taxes withheld from the salaries of officers and employees.

Direct taxes include all taxes assessed against and paid by the trust, including the trust's FICA taxes as an employer.

Column (D): Enter the total of all disbursements during the reporting period for other payroll deductions (other than for taxes).

Column (E): Enter the total allowances made by direct and indirect disbursements to each officer or employee on a daily, weekly, monthly, or other periodic basis. Do not include allowances paid on the basis of mileage or meals which must be reported in Column (F) or (G), as applicable.

Column (F): Enter all direct and indirect disbursements to each officer or employee that were necessary for conducting official business of the trust, except salaries or allowances which must be reported in Columns (B) and (E), respectively.

Examples of disbursements to be reported in Column (F) include: all expenses that were reimbursed directly to an officer or employee, meal allowances and mileage allowances, expenses for officers' or employees' meals and entertainment, and various goods and services furnished to officers or employees but charged to the trust. Such disbursements should be included in Column (F) only if they were necessary for conducting official business; otherwise, report them in Column (G). Also include in Column (F) travel advances that are not considered loans as explained in the instructions for Schedule 4 (Loans Receivable).

Do not report the following disbursements in Schedule 3:

- Reimbursements to an officer or employee for the purchase of investments or fixed assets, such as reimbursing an officer or employee for a file cabinet purchased for office use;
- Indirect disbursements for temporary lodging (room rent charges only) or transportation by public carrier necessary for conducting official business while the officer or employee is in travel status away from his or her home and principal place of employment with the trust if payment is made by the trust directly to the provider or through a credit arrangement;
- Disbursements made by the trust to someone other than an officer or employee as a result of transactions arranged by an officer or employee in which property, goods, services, or other things of value were received by or on behalf of the trust rather than the officer or employee, such as rental of offices and meeting rooms, purchase of office supplies, refreshments and other expenses of meetings, and food and refreshments for the entertainment of groups other than the officers or employees on official business;
- Office supplies, equipment, and facilities furnished to officers or employees by the trust for use in conducting official business; and
- Maintenance and operating costs of the trust's assets, including buildings, office furniture, and office equipment; however, see "Special Rules for Automobiles" below.

Column (G): Enter all other direct and indirect disbursements to each officer or employee. Include all disbursements for which cash, property, goods, services, or other things of value were received by or on behalf of each officer or employee and were essentially for the personal benefit of the officer or employee and not necessary for conducting official business of the trust.

Include in Column (G) all disbursements for transportation by public carrier between the officer or employee's home

and place of employment or for other transportation not involving the conduct of official business. Also, include the operating and maintenance costs of all the trust's assets (automobiles, etc.) furnished to officers or employees essentially for the officers or employees' personal use rather than for use in conducting official business.

Do not include in Column (G) loans to officers or employees, which must be reported in Schedule 4 (Loans Receivable).

Column (H): Add Columns (B) through (G) of each Line and enter the totals in Column (H).

Enter the totals of lines 1 through 9 for each Column on Line 10.

SPECIAL RULES FOR AUTOMOBILES

Include in Column (G) of Schedule 3 that portion of the operating and maintenance costs of any automobile owned or leased by the trust to the extent that the use was for the personal benefit of the officer or employee to whom it was assigned. This portion may be computed on the basis of the mileage driven on official business compared with the mileage for personal use. The portion not included in Column (G) must be reported in Column (F).

Alternatively, rather than allocating these operating and maintenance costs between Columns (F) and (G), if 50% or more of the officer or employee's use of the vehicle was for official business, the trust may enter in Column (F) all disbursements relative to that vehicle with an explanation in Item 22 (Additional Information) indicating that the vehicle was also used part of the time for personal business. Likewise, if less than 50% of the officer or employee's use of the vehicle was for official business, the trust may report all disbursements relative to the vehicle in Column (G) with an explanation in Item 22 indicating that the vehicle was also used part of the time on official business.

The amount of decrease in the market value of an automobile used over 50% for the personal benefit of an officer or employee must also be reported in Item 22.

SCHEDULE 4 – LOANS RECEIVABLE – Report details of all direct and indirect loans (whether or not evidenced by promissory notes or secured by mortgages) owed to the trust at any time during the reporting period by officers, employees or members of the reporting labor organization whose indebtedness to the trust during the reporting period exceeded $250. An example of an indirect loan is a disbursement by the trust to an educational institution for the tuition expense of an officer, employee, or member that must be repaid to the trust by that individual. Be sure to report all loans that were made and repaid in full during the reporting period.

NOTE: *Advances, including salary advances, are considered loans and must be reported in Schedule 4 (Loans Receivable). However, advances to officers and employees of the trust for travel expenses necessary for conducting official business are not considered loans if the following conditions are met:*

- *The amount of an advance for a specific trip does not exceed the amount of expenses reasonably expected to be incurred for official travel in the near future, and the amount of the advance is fully repaid or fully accounted for by vouchers or paid receipts within 30 days after the completion or cancellation of the travel.*

- *The amount of a standing advance to an officer or employee who must frequently travel on official business does not unreasonably exceed the average monthly travel expenses for which the individual is separately reimbursed after submission of vouchers or paid receipts, and the individual does not exceed 60*

days without engaging in official travel.

See the instructions for Schedule 3 (Disbursements to Officers and Employees of the Trust) for reporting travel advances that meet these criteria.

Column (A): For each loan to each officer and employee or member of the union, enter the following information on Lines 1 through 4 (and on additional pages if necessary):

- The name of each officer, employee, or member of the union whose total loan indebtedness to the trust at any time during the reporting period exceeded $250;
- The purpose of each loan;
- The security given for each loan; and
- The terms of repayment for each loan.

For each officer or employee listed, indicate after each name either "O" (officer) or "E" (employee).

Column (B): Enter on Lines 1 through 4 the loan amounts outstanding at the start of the reporting period from each listed individual. Enter on Line 5 the total from any additional pages. Add Lines 1 through 5 and enter the total on Line 6.

Column (C): Enter on Lines 1 through 4 the amount of loans made during the reporting period to each listed individual and business enterprise. Enter on Line 5 the total from any additional pages. Add Lines 1 through 5 and enter the total on Line 6.

Columns (D)(1) and (D)(2): Enter on Lines 1 through 4 the amount of loan repayments during the reporting period from each listed individual and business enterprise. Use Column (D)(1) to report repayments received in cash. Use Column (D)(2) to report repayments made in a manner other than cash, such as repayments made by officers or employees by means of deductions from their salaries. Enter on Line 5 the totals from any additional pages. Add Lines 1 through 5, Columns (D)(1) and (D)(2), and enter the totals on Line 6. Explain in Item 22 (Additional Information) any non-cash amounts reported in Column (D)(2).

Column (E): Enter on Lines 1 through 4 the loan amounts outstanding at the end of the reporting period for each listed individual and business enterprise. Enter on Line 5 the total from any additional pages. Add Lines 1 through 5 and enter the total on Line 6. If any loans receivable were liquidated, reduced or written off during the reporting period, the reason and the amount must be reported in Item 22 (Additional Information).

ADDITIONAL INFORMATION AND SIGNATURES

22. ADDITIONAL INFORMATION — Use Item 22 to provide additional information as indicated on Form T-1 and in these instructions. Enter the number of the item to which the information relates in the Item Number column. If there is not enough space in Item 22, report the additional information on a separate letter-size page(s). Be sure to include the following at the top of each page: the name of the labor organization, its 6-digit file number and that of the trust as reported in Item 1, and the ending date of the reporting period as reported on the second line of Item 2.

23-24. SIGNATURES — The completed Form T-1 that is filed with OLMS must be signed by both the president and treasurer, or corresponding principal officers, of the labor organization. If an officer other than the president or treasurer performs the duties of the principal executive or principal financial officer, the other officer may sign the report. If an officer other than the president or treasurer signs the report, enter the correct title in Item 23 or 24, and explain in Item 22 (Additional Information) why the president or treasurer did not sign

the report. OLMS has implemented a system to permit individuals to sign electronically submitted forms with digital signatures. Information about this system can be obtained on the OLMS website at http://www.dol.gov/esa/regs/compliance/olms/digital-signatures.htm. Enter the date the report was signed and the telephone number at which the signatories conduct official business; a private, unlisted telephone number does not have to be reported. On a paper Form T-1 submitted pursuant to an exemption, original signatures are required; stamped or mechanical signatures are not acceptable.

IX. Trusts That Have Ceased to Exist

If the trust has gone out of existence as a trust in which a labor organization is interested, the president and treasurer of the labor organization must file a terminal financial report for the period from the beginning of the fiscal year to the date of termination. A terminal financial report must be filed if the trust has gone out of business by disbanding, merging into another organization, or being merged and consolidated with one or more trusts to form a new trust. Similarly, if a trust in which a labor organization previously was interested continues in existence, but the labor organization interest terminates, the labor organization must file a terminal financial report for that trust.

The terminal financial report must be filed within 30 days after the date of termination to the following address:

U.S. Department of Labor
Employment Standards Administration
Office of Labor-Management Standards
200 Constitution Avenue, N.W.
Room N-5616
Washington, DC 20210-0001

To complete a terminal report on Form T-1, follow the instructions in Section VIII and, in addition:

- Enter the date the trust, or the labor organization's interest in the trust, ceased to exist in Item 2 after the word "Through."
- Enter an "X" in the box in Item 3(c) indicating that the trust, or the labor organization's interest in the trust, ceased to exist during the reporting period and that this is the terminal Form T-1 for the trust.
- Enter "3(c)" in the Item Number column in Item 22 (Additional Information) and provide a detailed statement of the reason the trust, or the labor organization's interest in the trust, ceased to exist. If the trust ceased to exist, also report in Item 22 plans for the disposition of the trust's cash and other assets, if any. Provide the name and address of the person or organization that will retain the records of the terminated organization. If the trust merged with another trust, report that organization's name and address.

Contact the nearest OLMS field office listed below if you have questions about filing a terminal report.

U.S. Department of Labor
Employment Standards Administration
Office of Labor-Management Standards
Washington, DC 20210

FORM LM-3 LABOR ORGANIZATION ANNUAL REPORT

FOR USE BY LABOR ORGANIZATIONS WITH LESS THAN $200,000 IN TOTAL ANNUAL RECEIPTS

Form Approved
Office of Management and Budget
No. 1215-0188
Expires: XX-XX-XXXX

This report is mandatory under RL. 86-257, as amended. Failure to comply may result in criminal prosecution, fines, or civil penalties as provided by 29 U.S.C. 439 or 440.

READ THE INSTRUCTIONS CAREFULLY BEFORE PREPARING THIS REPORT.

For Official Use Only

1. FILE NUMBER

2. PERIOD COVERED
MO DAY YEAR
From
Through

3. (a) AMENDED - If this is an amended report correcting a previously filed report, check here:

(b) TERMINAL - If your organization ceased to exist and this is its terminal report, see Section XII of the instructions and check here:

IMPORTANT

Peel off the address label from the back of the package and place it here.

If the label information is correct, leave Items 4 through 8 blank.

If any of the label information is incorrect, complete Items 4 through 8.

4. AFFILIATION OR ORGANIZATION NAME

5. DESIGNATION (Local, Lodge, etc.)

6. DESIGNATION NUMBER

7. UNIT NAME (if any)

9. Are your organization's records kept at its mailing address? (If "No." provide address in Item 55.) Yes ___ No ___

8. MAILING ADDRESS *(type or print in capital letters.)*

First Name

Last Name

P.O. Box - Building and Room Number (if any)

Number and Street

City

State

ZIP Code + 4

55. ADDITIONAL INFORMATION *(If more space is needed, attach additional pages properly identified.)*

Item Number

Each of the undersigned, duly authorized officers of the above labor organization, declares, under the applicable penalties of law, that all of the information submitted in this report (including the information contained in any accompanying documents) has been examined by the signatory and is, to the best of the undersigned's knowledge and belief, true, correct, and complete. *(See Section VI on penalties in the instructions.)*

56. SIGNED: _____ PRESIDENT *(if other title, see instructions.)*
/ / Date ( ) - Telephone Number

57. SIGNED: _____ TREASURER *(if other title, see instructions.)*
/ / Date ( ) - Telephone Number

FILE NUMBER ___ - ___

During the Reporting Period Did Your Organization:

	Yes	No
10. Create or participate in the administration of a trust or other fund or organization, as defined in the instructions, which provides benefits for members or their beneficiaries?		
11. Have a political action committee (PAC) fund?		
12. Acquire or dispose of any goods or property in any manner other than by purchase or sale?		
13. Have an audit or review of its books and records by an outside accountant or by a parent body auditor/representative?		
14. Discover any loss or shortage of funds or other property? *(Answer "Yes" even if there has been repayment or recovery.)*		
15. Have any officer who was paid $10,000 or more by your organization and also received $10,000 or more as an officer or employee of another labor organization or of an employee benefit plan?		
16. Pay any employee salary, allowances, and other expenses which, together with any payments from affiliates, totaled more than $10,000?		
17. Have loans totaling more than $250 to any officer, employee, or member, or make any loans to a business enterprise?		

(if the answer to any of the above questions is "Yes," provide details in Item 55 on page 1 as explained in the instructions for each item.)

18. How many members did your organization have at the end of the reporting period? ___

19. What is the maximum amount recoverable under your organization's fidelity bond for a loss caused by any officer or employee of your organization? $ ___

20. During the reporting period, did your organization have any changes in its constitution and bylaws (other than rates of dues and fees) or in practices/procedures listed in the instructions? Yes ☐ No ☐
(If the constitution and bylaws have changed, attach two new dated copies. If practices procedures have changed, see the instructions.)

21. What is the date of your organization's next regular election of officers? MO ___ YEAR ___

22. What are your organization's rates of dues and fees? *(Enter a minimum and maximum if more than one rate applies for any line.)*

	Rates of Dues and Fees
(a) Regular Dues/Fees	$ _____ per _____ *(Month, Year, etc.)*
(b) Initiation Fees	$ _____
(c) Transfer Fees	$ _____
(d) Work Permits	$ _____ per _____ *(Month, Year, etc.)*

23. ALL OFFICERS AND DISBURSEMENTS TO OFFICERS

Enter Amounts in Dollars Only - Do Not Enter Cents

FILE NUMBER: ___ - ___

(A) Name *(List all persons who held office during the reporting period even if they received no salary or other disbursements. Use all capital letters.)* / (B) Title *(Enter title of officer, such as PRESIDENT or TREASURER.)*	Status (C)*	Gross Salary (before taxes and other deductions) (D)	Allowances and Other Disbursements (E)	Total (F)
1. Last Name / First Name / MI Title	Status			
2. Last Name / First Name / MI Title	Status			
3. Last Name / First Name / MI Title	Status			
4. Last Name / First Name / MI Title	Status			
5. Last Name / First Name / MI Title	Status			
6. Last Name / First Name / MI Title	Status			
7. Last Name / First Name / MI Title	Status			
8. Totals from additional pages *(if any)*				
9. Totals of Lines 1 through 8				
			10. Less Deductions	
Enter the Total from Line 11 in ..... Item 44 ⇨			11. Net Disbursements	

*Code for Status (C): past officer - P; continuing officer - C; new officer during the reporting period - N.

(If any officer was not elected at a regular election in accordance with your organization's constitution and bylaws, explain in Item 55 on page 1.)

Enter Amounts in Dollars Only - Do Not Enter Cents

FILE NUMBER: ___ - ___

STATEMENT A ASSETS AND LIABILITIES

ASSETS Item	Start of Reporting Period (A)	End of Reporting Period (B)	LIABILITIES Item	Start of Reporting Period (C)	End of Reporting Period (D)
24. Cash			31. Accounts Payable		
25. Loans Receivable			32. Loans Payable		
26. U.S. Treasury Securities			33. Mortgages Payable		
27. Investments			34. Other Liabilities		
28. Fixed Assets			35. TOTAL LIABILITIES		
29. Other Assets					
30. TOTAL ASSETS			36. NET ASSETS *(Item 30 less Item 35)*		

STATEMENT B RECEIPTS AND DISBURSEMENTS

CASH RECEIPTS Item	AMOUNT	CASH DISBURSEMENTS Item	AMOUNT
37. Dues		44. To Officers *(from Item 23)*	
38. Per Capita Tax		45. To Employees *(less deductions)*	
39. Fees, Fines, Assessments & Work Permits		46. Per Capita Tax	
40. Interest & Dividends		47. Office & Administrative Expense	
41. Sale of Investments & Fixed Assets		48. Professional Fees	
42. Other Receipts		49. Benefits	
43. TOTAL RECEIPTS		50. Contributions, Gifts& Grants	
If total receipts reported in Item 43 are $200,000 or more, your organization must file Form LM-2 instead of this form.		51. Purchase of Investments & Fixed Assets	
		52. Loans Made	
		53. Other Disbursements	
		54. TOTAL DISBURSEMENTS	

ORGANIZATION NAME:

ENDING DATE OF PERIOD COVERED:

FILE NUMBER: ___ - ___

PAGE ____ OF ____ ADDITIONAL PAGES

23. ALL OFFICERS AND DISBURSEMENTS TO OFFICERS *(continued)*

(A) Name *(List all persons who held office during the reporting period even if they received no salary or other disbursements. Use all capital letters.)*	(B) Title *(Enter title of officer, such as PRESIDENT or TREASURER,)*	Status (C)*	Gross Salary (before taxes and other deductions) (D)	Allowances and Other Disbursements (E)	Total (F)
Last Name / First Name / MI	Title	Status			
Last Name / First Name / MI	Title	Status			
Last Name / First Name / MI	Title	Status			
Last Name / First Name / MI	Title	Status			
Last Name / First Name / MI	Title	Status			
Last Name / First Name / MI	Title	Status			
Last Name / First Name / MI	Title	Status			
Last Name / First Name / MI	Title	Status			
		Totals			

Form LM-3 (Revised 2002)

Public reporting burden for this collection of information is estimated to average 6 hours 38 minutes per response, including the time for reviewing instructions, searching existing data sources, gathering and maintaining data needed, and completing and reviewing the collection of information. Persons are not required to respond to the collection of information unless it displays a currently valid OMB control number. Reporting of this information is mandatory and is required by the Labor-Management Reporting and Disclosure Act of 1959, as amended, for the purpose of public disclosure. As this is public information, there are no assurances of confidentiality. If you have any comments regarding this estimate or any other aspect of this information collection, including suggestions for reducing this burden, please send them to the U.S. Department of Labor, Employment Standards Administration, Office of Labor-Management Standards, Division of Interpretations and Standards, Room N-5605, 200 Constitution Avenue, NW, Washington, DC 20210.

Instructions For Form LM-3 Labor Organization Annual Report

Proposed Instructions

GENERAL INSTRUCTIONS

I. Who Must File

Every labor organization subject to the Labor-Management Reporting and Disclosure Act of 1959, as amended (LMRDA), the Civil Service Reform Act (CSRA), or the Foreign Service Act (FSA) must file a financial report, Form LM-2, LM-3, or LM-4, each year with the Office of Labor-Management Standards (OLMS) of the U.S. Department of Labor's Employment Standards Administration. These laws cover labor organizations that represent employees who work in private industry, employees of the U.S. Postal Service, and most Federal government employees. Labor organizations that represent only state, county, or municipal government employees are not covered by these laws and, therefore, are not required to file, except that any "conference, general committee, joint or system board, or joint council" that is subordinate to a national or international labor organization is a labor organization under the LMRDA and therefore is required to file a financial report if the national or international labor organization is a labor organization engaged in an industry affecting commerce within the meaning of section 3(j) of the LMRDA. If you have a question about whether the labor organization is required to file, contact the nearest OLMS field office listed at the end of these instructions.

II. What Form to File

Every labor organization subject to the LMRDA, CSRA, or FSA with total annual receipts of less than $200,000 may file the simplified annual report Form LM-3, if not in trusteeship as defined in Section IX of these instructions. The term "total annual receipts" means all financial receipts of the labor organization during its fiscal year, regardless of the source, including receipts of any special funds as described in Section VIII (Funds to be Reported) of these instructions. Funds of a trust in which the labor organization is interested should not be included in the total annual receipts considered when determining which form to file.

Labor organizations with total annual receipts of $200,000 or more and those in trusteeship must file the more detailed Form LM-2. Labor organizations with less than $10,000 in total annual receipts may file the abbreviated annual report Form LM-4, if not in trusteeship.

NOTE: Certain labor organizations are required to file Form 990, Return of Organization Exempt from Income Tax, with the Internal Revenue Service (IRS). The IRS will accept a copy of the labor organization's Form LM-3 to provide some of the information required by Form 990. See the instructions for the current Form 990 for details. Filing Form LM-3 with the IRS does <u>not</u> satisfy the labor organization's reporting requirement with the U.S. Department of Labor.

III. When to File

Form LM-3 must be filed within 90 days after the end of the labor organization's fiscal year (12-month reporting period). The law does not authorize the U.S. Department of Labor to grant an extension of time for filing reports for any reason.

If the labor organization went out of existence during its fiscal year, a terminal financial report must be filed within 30 days after the date it ceased to exist. See Section XII (Labor Organizations Which Have Ceased to Exist) of these instructions for information on filing a terminal financial report.

IV. Where to File

One completed Form LM-3 and any required attachments must be filed with the U.S. Department of Labor at the following address:

U.S. Department of Labor
Employment Standards Administration
Office of Labor-Management Standards
200 Constitution Avenue, NW, Room N-5616
Washington, DC 20210

If available, use the pre-addressed envelope enclosed with this report package to file Form LM-3.

Number of Copies

Complete one of the two blank copies included in the report package; do not use a photocopy of the form. The completed report must be filed with OLMS. A copy should also be maintained in the labor organization's records.

Address Label

If the report package was mailed to the labor organization with an address label, peel off the label and place it in the designated box on page 1 of the form. Use the preprinted label even if the information on it is incorrect. If any of the information on the label is incorrect, complete Items 4 through 8 in their entirety. If the label information is correct, leave Items 4 through 8 blank.

The labor organization's file number is the 6-digit number on the first line of the label. If the labor organization does not have a label and the number cannot be obtained from prior reports filed with the Department, the number can be obtained from the OLMS website at www.union-reports.dol.gov or by contacting the nearest OLMS field office listed on page XX of these instructions. The labor organization's 6-digit file number must also be entered in the File Number boxes at the top of each page of Form LM-3.

V. Public Disclosure

The LMRDA requires that the Department make labor organization financial reports available for inspection by the public. Reports may be viewed and downloaded from the OLMS website at www.union-reports.dol.gov. Copies of reports and union constitutions and bylaws can also be ordered at the same website. Reports may also be examined and copies purchased at the OLMS Public Disclosure Room at the above address in Section IV (How To File) or at the OLMS field office in whose jurisdiction the reporting organization is located. See page XX of these instructions for a list of OLMS field offices.

VI. Officer Responsibilities and Penalties

The president and treasurer or the corresponding principal officers of the labor organization required to sign Form LM-3 are personally responsible for its filing and accuracy. Under the LMRDA, officers are subject to criminal penalties for willful failure to file a required report and for false reporting. False reporting includes making any false statement or misrepresentation of a material fact while knowing it to be false, or for knowingly failing to disclose a material fact in a required report or in the information required to be contained in it or in any information

required to be submitted with it. Under the CSRA and FSA and implementing regulations, false reporting and failure to report may result in administrative enforcement action and litigation. The officers responsible for signing Form LM-3 are also subject to criminal penalties for false reporting under Section 1001 of Title 18 of the United States Code.

The reporting labor organization and the officers required to sign Form LM-3 are also subject to civil prosecution for violations of the filing requirements. According to Section 210 of the LMRDA (29 U.S.C. 440), "whenever it shall appear that any person has violated or is about to violate any of the provisions of this title, the Secretary may bring a civil action for such relief (including injunctions) as may be appropriate."

VII. Recordkeeping

The officers required to file Form LM-3 are responsible for maintaining records that will provide in sufficient detail the information and data necessary to verify the accuracy and completeness of the report. The records must be kept for at least 5 years after the date the report is filed. Any record necessary to verify, explain or clarify the report must be retained, including, but not limited to, vouchers, worksheets, receipts, applicable resolutions, and any electronic documents used to complete and file the report.

VIII. Funds To Be Reported

The labor organization's Form LM-3 must report financial information for all funds of the labor organization. Include any special purpose funds or accounts, such as strike funds, vacation funds, and scholarship funds even if they are not part of the labor organization's general treasury.

All labor organization political action committee (PAC) funds are considered to be labor organization funds. However, to avoid duplicate reporting, PAC funds which are kept separate from the labor organization's treasury are not required to be included in the labor organization's Form LM-3 if publicly available reports on the PAC funds are filed with a Federal or state agency.

The labor organization is required to report information about any trust in which it is interested on the Form T-1. See Section X (Trusts In Which A Labor Organization Is Interested).

SPECIAL INSTRUCTIONS FOR CERTAIN ORGANIZATIONS

IX. Labor Organizations in Trusteeship

Any labor organization that has placed a subordinate labor organization in trusteeship is responsible for filing the subordinate's annual financial report. A trusteeship is defined in section 3(h) of the LMRDA as "any receivership, trusteeship, or other method of supervision or control whereby a labor organization suspends the autonomy otherwise available to a subordinate body under its constitution or bylaws."

Annual financial reports filed for any labor organization in trusteeship must be filed on Form LM-2 rather than Form LM-3. The report must be signed by the president and treasurer or corresponding principal officers of the labor organization which imposed the trusteeship and by the trustees of the subordinate labor organization.

X. Trusts In Which A Labor Organization Is Interested

The labor organization must disclose the existence of all trusts in which the labor organization is interested in Item 55 as required by the instructions for Item 10. The

labor organization must also file a Form T-1 disclosing the assets, liabilities, receipts, and disbursements of a significant trust in which the labor organization is interested.

A trust in which a labor organization is interested is defined by statute as

> ...a trust or other fund or organization (1) which was created or established by a labor organization, or one or more of the trustees or one or more members of the governing body of which is selected or appointed by a labor organization, and (2) a primary purpose of which is to provide benefits for the members of such labor organization or their beneficiaries.

29 U.S.C. 402(l). The definition of a trust in which a labor organization is interested may include, but is not limited to, joint funds administered by a union and an employer pursuant to a collective bargaining agreement, educational or training institutions, banks or credit unions created for the benefit of union members, and redevelopment or investment groups established by the union for the benefit of its members. The determination whether a particular entity is a trust in which a labor organization is interested must be based on the facts in each case. A trust will be considered significant, and therefore must be reported on Form T-1, if (1) it has annual receipts of $200,000 or more during the trust's most recent fiscal year, and (2) the labor organization's financial contribution to the trust or the contribution made on the labor organization's behalf, or as a result of a negotiated agreement to which the labor organization is a party, is $10,000 or more annually.

If a trust has annual receipts of less than $200,000 or if the labor organization's financial contribution to a trust, or the contribution made on the labor organization's behalf, or as a result of a negotiated agreement to which the labor organization is a party, is less than $10,000 annually, the labor organization need only report the existence of the trust and the amount of the labor organization's contribution or the contribution made on the labor organization's behalf, or as a result of a negotiated agreement to which the labor organization is a party. This information should be reported in Item 55 as required by the instructions for Item 10 and, if the contribution was made by the labor organization itself, in the appropriate disbursement item in Statement B.

No Form T-1 should be filed for any labor organization that already files a Form LM-2, LM-3, or LM-4, nor should a report be filed for any entity that is expressly exempted from reporting in the Act. No separate report need be filed for Political Action Committee (PAC) funds if publicly available reports on the PAC funds are filed with a Federal or state agency, or for a political organization for which reports are filed with the Internal Revenue Service pursuant to 26 U.S.C. 527. No separate report is required for an employee benefit plan that filed a complete and timely annual report pursuant to the requirements of the Employee Retirement Income Security Act of 1974 (ERISA), 29 U.S.C. 1023, 1024(a), and 1030, and 29 C.F.R. 2520.103-1, for the plan year ending with or within the year preceding the year covered by the reporting union's LM-3, or if annual audits are freely available on demand under § 302(c)(5)(B) of the LMRA, 29 U.S.C.186(c)(5)(B).

Form T-1 must be filed within 90 days after the expiration of the trust's fiscal year. If the trust's fiscal year is not the same as the labor organization's fiscal year, report when the trust's fiscal year ends in Item 55 as required by the instructions for Item 10. See Instructions for Form T-1, Trust Annual Report.

Questions regarding these reporting requirements should be directed to the OLMS Division of Interpretations and Standards, which can be reached at the above address, by email at olms-mail@dol-esa.gov, by phone at 202-693-0123 or by fax at 202-693-1340. The Department will publish additional information giving further practical guidance on the reporting requirements for trusts on the OLMS website at .www.olms.dol.gov

Examples of a trust in which a labor organization is interested may include, but are not limited to, the following entities:

Example A: The Redevelopment Corporation – A labor organization creates an entity named the Redevelopment Corporation, or appoints one or more of the members of the governing board of the Corporation, which is established primarily to enable members of the labor organization to obtain low cost housing constructed with federal Housing and Urban Development (HUD) grants. The Redevelopment Corporation must be reported as a trust in which the labor organization or organizations that created it, or that appointed members to its governing board, have an interest. A labor organization that neither participated in the creation of the Corporation, nor appointed members of its governing board, but loaned money to the Corporation to use as matching money for HUD grants need not report the Corporation as a trust in which it is interested.

Example B: The Educational Institute – Five reporting labor organizations form the Educational Institute to provide educational services primarily for the benefit of their members. Similar services are also provided to the general public. Each labor organization contributes funds to start the Educational Institute, which will then offer various educational programs that will generate revenue. Each labor organization that participated in forming the Institute, or that appoints a member to its governing body, must report the Educational Institute as a trust in which it is interested.

Example C: The Bank – A reporting labor organization forms a bank that is chartered and licensed under Federal and state laws, or selects a member of the board of directors of a bank that is already in existence, for the purpose of ensuring that banking services are available to members at reasonable cost, or as an investment for the purpose of increasing funds available for union activities for the benefit of union members. Any labor organization that participated in forming the bank, or that appoints a member to the bank's board of directors, must report the bank as a trust in which it has an interest.

Example D: Joint Funds – A reporting labor organization that forms a "joint fund" with a large national manufacturer to offer a variety of training and jobs skills programs for members of the labor organization, or appoints a member to the governing body of such a fund, must report the joint fund as a trust in which the labor organization has an interest.

Example E: 302(c)(5) through (9) Plans – A reporting labor organization forms a plan permitted under Section 302(c)(5) through (9) of the LMRA (29 U.S.C. 186 (c)(5) through (9)), and files a complete annual financial report as required under ERISA. The labor organization reports only that the plan exists and states where the ERISA annual financial report may be viewed. This information should be reported in Item 55. No Form T-1 need be filed even if the labor organization contributes more than $10,000 to the plan.

XI. Completing Form LM-3

Information Entry

Entries on the report should be typed or clearly printed in black ink. Do not use a pencil or any other color ink.

For items displaying separate boxes, enter only one letter or number in each box as illustrated below. Use all capital letters and print or type inside the boxes. Leave a blank box between words and/or numbers as appropriate. Print clearly so the information can be accurately scanned.

Entering Number and Street:

1404 REDWOOD COURT

Report amounts in Items 19 and 23 through 54 in dollars only. Do not enter cents. Round cents to the nearest dollar. Enter a single "0" in the boxes for reporting dollars if the labor organization has nothing to report.

Entering Dollars:

$1,573,844 – do not enter cents

Entering Zero:

$ _ , _ _ _ , _ _ 0

For items requiring a "Yes" or "No" answer, enter an "X" in the appropriate box. Do not use check marks or other marks.

Entering X:

Yes	No
X	

Continuation Pages

The Form LM-3 includes preprinted continuation pages for Item 23 (All Officers and Disbursements to Officers). These continuation pages must be used if additional space is needed to report all required information.

Additional Pages

Some of the items on the report require that further details be provided in Item 55 (Additional Information). If there is not enough space in Item 55, enter the additional information on a separate letter-size page(s), giving the number of the item to which the information applies. Print clearly at the top of each attached page the name of the labor organization, its 6-digit file number as reported in Item 1 (File Number), and the ending date of the reporting period as reported on the second line of Item 2 (Period Covered), the page number for each attachment page and the total number of additional pages attached.

Affiliates

"Affiliates," within the meaning of these instructions, are labor organizations chartered by the same parent body, governed by the same constitution and bylaws, or having the relationship of parent and subordinate. For example, a parent body is an affiliate of all its subordinate bodies, and all subordinate bodies of the same parent body are affiliates of each other.

INFORMATION ITEMS 1–22

Answer Items 1 through 22 as instructed. Enter an "X" in the appropriate box for those questions requiring a "Yes" or "No" answer; do not leave both boxes blank. Enter a single "0" in the boxes for items requiring a number or dollar amount if there is nothing to report.

1. FILE NUMBER — Enter the 6-digit file number that OLMS assigned to the labor organization. If this Form LM-3 was mailed to you with an address label, the labor organization's file number is the 6-digit number on the first line of the label. If you do not have a label and cannot obtain the number from prior reports filed by the labor organization, the number can be obtained from the OLMS Web site at www.union-reports.dol.gov, or by contacting the nearest OLMS field office listed on page XX of these instructions.

2. PERIOD COVERED — Enter the beginning and ending dates of the period covered by this report. The labor organization's report should never cover more than a 12-month period. For example, if your organization's 12-month fiscal year begins on January 1 and ends on December 31, enter these dates as 01 01 20XX and 12 31 20XX. It would be incorrect to enter January 1 of one year through January 1 of the next year.

If the labor organization changed its fiscal year, enter in Item 2 the ending date for the period of less than 12 months, which is the labor organization's new fiscal year ending date, and report in Item 55 that the labor organization changed its fiscal year. For example, if the labor organization's fiscal year ending date changes from June 30 to December 31, a report must be filed for the partial year from July 1 to December 31. Thereafter, the labor organization's report should cover a full

12-month period from January 1 to December 31.

3. AMENDED OR TERMINAL REPORT

— Enter an "X" in the box in Item 3(a) if the labor organization is filing an amended report correcting a previously filed report. Enter an "X" in the box in Item 3(b) if the labor organization has gone out of business by disbanding, merging into another labor organization, or being merged and consolidated with one or more labor organizations to form a new labor organization, and this is the labor organization's terminal report. Be sure the date the labor organization ceased to exist is entered in Item 2 after the word "Through." See Section XII of these instructions for more information on filing a terminal report.

4. AFFILIATION OR ORGANIZATION NAME — Enter the name of the national or international labor organization that granted the reporting labor organization a charter. If the reporting labor organization has no such affiliation, enter the name of the labor organization as currently identified in the labor organization's constitution and bylaws or other organizational documents.

5. DESIGNATION — Enter the designation that specifically identifies the labor organization, such as Local, Lodge, Branch, Joint Board, Joint Council, District Council, etc.

6. DESIGNATION NUMBER — Enter the number or other identifier, if any, by which the labor organization is known.

7. UNIT NAME — Enter any additional or alternate name by which the labor organization is known, such as "Chicago Area Local."

8. MAILING ADDRESS — Enter the current address where mail is most likely to reach the labor organization as quickly as possible. Be sure to indicate the first and last name of the person, if any, to whom such mail should be sent and include any building and room number.

9. PLACE WHERE RECORDS ARE KEPT — If the records required to be kept by the labor organization to verify this report are kept at the address reported in Item 8, answer "Yes." If not, answer "No" and provide in Item 55 the address where the labor organization's records are kept.

10. TRUSTS OR FUNDS — Answer "Yes" to Item 10, if the labor organization has an interest in a trust as defined in 29 U.S.C. 402(l) (see Section X of these instructions). Provide in Item 55 (Additional Information) the full name, address, and purpose of each trust. Also include in Item 55 the fiscal year ending date for any trust for which a Form T-1 is filed if the trust's fiscal year is different from that of the labor organization. If no Form T-1 is required to be filed on the trust because (1) the trust had annual receipts of less than $200,000 during the trust's most recent fiscal year or (2) the labor organization's financial contribution to the trust or the contribution made on the labor organization's behalf, or as a result of a negotiated agreement to which the labor organization is a party, is less than $10,000, the labor organization should also report the amount of the contribution in Item 55 and, if the contribution was made by the labor organization itself, in the appropriate disbursement item in Statement B. Additionally, if no Form T-1 is filed because financial information is already available as a result of the disclosure requirements of another federal statute, list the name of any government agency, such as the Securities and Exchange Commission (SEC) or the Pension and Welfare Benefits Administration (PWBA) of the Department of Labor, with which the trust files a publicly available report, and the relevant file number of the trust, or otherwise indicate where the relevant report may be viewed. See Instructions for Form T-1, Trust Annual Report, for guidance on reporting the assets, liabilities, receipts, and disbursements of these entities.

11. POLITICAL ACTION COMMITTEE FUNDS —If Item 11 is answered "Yes," provide in Item 55 the full name of each separate political action committee (PAC)

and list the name of any government agency, such as the Federal Election Commission or a state agency, with which the PAC has filed a report. (PAC funds which are kept separate from the labor organization's treasury are not required to be included in your organization's Form LM-3 if publicly available reports on the PAC funds are filed with a Federal or state agency. See Section VIII of these instructions for additional information on PAC funds.)

12. ACQUISITION OR DISPOSITION OF PROPERTY — If Item 12 is answered "Yes," describe in Item 55 the manner in which the labor organization acquired or disposed of property, such as donating office furniture or equipment to charitable organizations or trading in assets. Include the type of property, its value, and the identity of the recipient or donor, if any. Also report in Item 55 the cost or other basis at which any acquired assets were entered on the labor organization's books or the cost or other basis at which any assets disposed of were carried on the labor organization's books.

For assets that were traded in, enter in Item 55 the cost, book value, and trade-in allowance.

13. AUDIT OR REVIEW OF BOOKS AND RECORDS — If Item 13 is answered "Yes," indicate in Item 55 whether the audit or review was performed by an outside accountant or a parent body auditor/representative. If the audit or review was performed by an outside accountant, provide the name of the accountant or accounting firm. Report any audit or review by an outside accountant or a parent body auditor/representative in which the labor organization's books and records were examined to verify their accuracy and validity. The term "audit or review" does not include providing assistance in developing a bookkeeping system, providing routine bookkeeping services, or merely compiling information from the labor organization's books and records to prepare Form LM-3 or other financial reports. Also, do not answer Item 13 "Yes" if the audit or review was performed by an audit committee or trustees of the labor organization.

NOTE: The LMRDA does not require an audit or review.

14. LOSSES OR SHORTAGES — If Item 14 is answered "Yes," describe the loss or shortage in detail in Item 55, including such information as the amount of the loss or shortage of funds or a description of the property that was lost, how it was lost, and to what extent, if any, there has been an agreement to make restitution or any recovery by means of repayment, fidelity bond, insurance, or other means.

15. ADDITIONAL POSITIONS OF OFFICERS — Answer Item 15 "Yes" only if an officer of the labor organization was paid $10,000 or more in salary, wages, and allowances by the labor organization <u>and</u> was paid $10,000 or more in salary, wages, and allowances as an officer or employee of another labor organization or of an employee benefit plan. In calculating whether an officer was paid $10,000 or more, include allowances paid on a daily, weekly, monthly, or other periodic basis. Do not include allowances paid on the basis of mileage or meals or amounts officers received as reimbursed expenses. If Item 15 is answered "Yes," provide in Item 55 the name of each officer, the name of the other labor organization(s) or employee benefit plan(s), and the officer's position in the other labor organization(s) or employee benefit plan(s).

16. EMPLOYEES — Answer Item 16 "Yes" if any employee of the labor organization received more than $10,000 in gross salaries, allowances, and other direct and indirect disbursements during the reporting period (direct and indirect disbursements are defined in the instructions for Item 23). In computing the total, add together all disbursements made to each employee by the labor organization (including any subsidiary organization) and any affiliates.

("Affiliates" means labor organizations chartered by the same parent body, governed by the same constitution and bylaws, or having the relationship of parent and subordinate.)

If Item 16 is answered "Yes," report in Item 55 the name and position of each employee and the names of the other affiliated labor organizations which made disbursements to or on behalf of the employee. Also report in Item 55 the total disbursements made to each employee or on the employee's behalf by the labor organization, including all salary and allowances (before any deductions) and other disbursements (including reimbursed expenses).

17. LOANS — Answer Item 17 "Yes" if any officer, employee, or member owed the labor organization more than $250 at any time during the reporting period; or if the labor organization made a loan, regardless of amount, to any business enterprise during the reporting period. Include any direct or indirect loans whether or not evidenced by a promissory note or secured by a mortgage. An example of an indirect loan is a disbursement by the labor organization to an educational institution for the tuition expense of an officer, employee, or member that must be repaid to the labor organization by that individual.

If Item 17 is answered "Yes," report in Item 55 the name of each individual and business enterprise, the amount each individual owed at the end of the reporting period, and the amount loaned to each business enterprise during the reporting period. Also report in Item 55 the purpose, terms for repayment, and any security for each such loan.

NOTE: Advances, including salary advances, are considered loans and must be reported in Item 25 (Loans Receivable) and Item 52 (Loans Made). However, advances to officers and employees of the labor organization for travel expenses necessary for conducting official business are not considered loans if the following conditions are met:

- the amount of an advance for a specific trip does not exceed the amount of expenses reasonably expected to be incurred for official travel in the near future, and the amount of the advance is fully repaid or fully accounted for by vouchers or paid receipts within 30 days after the completion or cancellation of the travel.
- the amount of a standing advance to an officer or employee who must frequently travel on official business does not unreasonably exceed the average monthly travel expenses for which the individual is separately reimbursed after the submission of vouchers or paid receipts, and the individual does not exceed 60 days without engaging in official travel.

See the instructions for Item 23, Column (E), Item 29, and Item 45 for reporting travel advances that meet these criteria.

18. NUMBER OF MEMBERS — Enter the number of members in the labor organization at the end of the reporting period. Include all categories of members who pay dues. Do not include nonmember employees who make payments in lieu of dues as a condition of employment under a union security provision in a collective bargaining agreement.

19. FIDELITY BOND — Enter the maximum amount recoverable for a loss caused by any officer, employee, or agent of the labor organization who handled the labor organization's funds. Enter "0" if the labor organization was not covered by a fidelity bond during the reporting period.

NOTE: If the labor organization had property and annual financial receipts which totaled more than $5,000, each of the labor organization's officers, employees, and agents who handles funds or other property of the labor

organization must be bonded. The amount of the bond must be at least 10% of the value of the funds handled by the individual during the last reporting period, up to a maximum bond of $500,000. The bond must be obtained from a surety company approved by the Secretary of the Treasury. If you have any questions or need more information about bonding requirements, contact the nearest OLMS field office listed at the end of these instructions.

20. CHANGES IN CONSTITUTION AND BYLAWS OR PRACTICES/ PROCEDURES — If Item 20 is answered "Yes" because the labor organization's constitution and bylaws were changed during the reporting period (other than rates of dues and fees), attach two dated copies of the new constitution and bylaws to the Form LM-3 the labor organization submits to OLMS.

If the labor organization is governed by a uniform constitution and bylaws prescribed by the labor organization's parent national or international body, the labor organization's parent body may file the constitution and bylaws on the reporting organization's behalf. If the parent body files a constitution and bylaws on the labor organization's behalf, answer Item 20 "Yes" and state that fact in Item 55.

If Item 20 is answered "Yes" because the labor organization changed any of the practices/procedures listed below during the reporting period and the practices/procedures are not described in the labor organization's constitution and bylaws, the labor organization must file an amended Form LM-1 (Labor Organization Information Report) to update information on file with OLMS:

- qualifications for or restrictions on membership;
- levying assessments;
- participating in insurance or other benefit plans;
- authorizing disbursement of labor organization funds;
- auditing financial transactions of the labor organization;
- calling regular and special meetings;
- authorizing bargaining demands;
- ratifying contract terms;
- authorizing strikes;
- disciplining or removing officers or agents for breaches of their trust;
- imposing fines and suspending or expelling members including the grounds for such action and any provision made for notice, hearing, judgment on the evidence, and appeal procedures;
- selecting officers and stewards and any representatives to other bodies composed of labor organizations' representatives;
- invoking procedures by which a member may protest a defect in the election of officers (including not only all procedures for initiating an election protest but also all procedures for subsequently appealing an adverse decision, e.g., procedures for appeals to superior or parent bodies, if any); and
- issuing work permits.

Contact the nearest OLMS field office listed at the end of these instructions to obtain blank copies of Form LM-1.

NOTE: Federal employee labor organizations subject solely to the Civil Service Reform Act or Foreign Service Act are not required to submit an amended Form LM-1 to describe revised or changed practices/procedures.

21. NEXT REGULAR ELECTION — Enter the month and year of the labor organization's next regular election of general officers (president, vice president, treasurer, secretary, etc.). Do not report the date of any interim election to fill vacancies.

22. DUES AND FEES — Enter the dues and fees established by the labor organization. If more than one rate applies, enter the minimum and maximum rates. Enter "None" where appropriate.

Line (a): Enter the regular dues or fees or other periodic payments that a member must pay to be in good standing in the labor organization and enter the calendar basis for the payment (per month, per year, etc.). If the labor organization requires members to pay "working" dues as a part of regular dues, also report the amount or percent of "working" dues and enter the basis for the payment (per hour, per month, etc.). Include only the dues or fees of regular members and not dues or fees of members with special rates, such as apprentices, retirees, or unemployed members.

Line (b): Enter the initiation fees required from new members.

Line (c): Enter the fees other than dues required from transferred members. Such fees are those charged to persons applying for a transfer of membership to the labor organization from another labor organization with the same affiliation. Do not report fees charged to members transferring from one class of membership to another within the labor organization.

Line (d): If the labor organization issues work permits, enter the fees required and enter the calendar basis for the payment (per month, per year, etc.). Work permit fees are fees charged to nonmembers of the labor organization who work within its jurisdiction. Do not report as work permit fees those fees charged to nonmember applicants for membership pending acceptance of their membership application, or fees charged to persons applying for transfer of membership to the labor organization pending acceptance of their application for transfer.

FINANCIAL DETAILS

REPORT ONLY DOLLAR AMOUNTS

Report all amounts in dollars only. Round cents to the nearest dollar.

REPORTING CLASSIFICATIONS

Complete all items and lines on the form as given. Do not use different accounting classifications or change the wording of any item or line.

BEGINNING AND ENDING AMOUNTS

Entries in Statement A must report amounts for both the start and the end of the reporting period. The amounts entered for the start of the reporting period on the labor organization's report should be identical to the amounts entered for the end of the reporting period on last year's report. If the amounts are not the same, fully explain the difference in Item 55

COMPLETE ALL ITEMS 23 THROUGH 54

Complete Item 23 and all items in Statement A and Statement B.

ITEM 23 — ALL OFFICERS AND DISBURSEMENTS TO OFFICERS — List all the labor organization's officers and report all salaries and other direct and indirect disbursements to officers during the reporting period. However, direct and indirect disbursements not involving the payment of some form of cash (cash, checks, money orders, etc.) should not be reported in Item 23 but must be explained in Item 55. Any direct or indirect cash disbursement required to be included in Item 23 should not be reported in other disbursement items.

NOTE: A "direct disbursement" to an officer is a payment made by the labor

organization to the officer in the form of cash, property, goods, services, or other things of value.

An "indirect disbursement" to an officer is a payment made by the labor organization to another party for cash, property, goods, services, or other things of value received by or on behalf of the officer. "On behalf of the officer" means received by a party other than the officer or the labor organization for the personal interest or benefit of the officer. Such payments include those made through a credit arrangement under which charges are made to the account of the labor organization and are paid by the organization.

Column (A), (B), and (C): Enter in the appropriate boxes the last name, first name, and title of every person who held office in the labor organization at any time during the reporting period. Include all the labor organization's officers whether or not any salary or other disbursements were made to them or on their behalf by the labor organization. "Officer" is defined in section 3(n) of the LMRDA as "any constitutional officer, any person authorized to perform the functions of president, vice president, secretary, treasurer, or other executive functions of a labor organization, and any member of its executive board or similar governing body."

In the box labeled "Status," enter the appropriate letter to show the status of each officer: "N" for a new officer who took office during the reporting period; "P" for a past officer who was not in office at the end of the reporting period; or "C" for a continuing officer who was in office before the reporting period and was still in office at the end of the reporting period. If any officer was not elected at a regular election in accordance with the labor organization's constitution and bylaws or other governing documents on file with OLMS, explain the manner in which the officer was chosen in Item 55.

Column (D): Enter the gross salary of each officer (before tax withholdings and other payroll deductions). Include disbursements for "lost time" or time devoted to union activities.

Column (E): Enter the total of all other direct and indirect disbursements to each officer other than salary, including allowances, disbursements that were necessary for conducting official business of the labor organization, and disbursements essentially for the personal benefit of the officer and not necessary for conducting official business of the labor organization.

Examples of disbursements to be reported in Column (E) include: allowances made by direct and indirect disbursements to each officer on a daily, weekly, monthly, or other periodic basis; allowances paid on the basis of mileage or meals; all expenses that were reimbursed directly to an officer; expenses for officers' meals and entertainment; and various goods and services furnished to officers but charged to the labor organization. Column (E) must also include:

- the total maintenance and operating costs of any automobile owned or leased by the labor organization and assigned to an officer regardless of whether the use was for official business or for the personal benefit of the officer. If more than 50% of the use of the automobile was for the personal benefit of the officer, the amount of decrease in the market value attributable to the officer's personal use must be reported in Item 55.
- all disbursements for transportation by public carrier between the officer's home and place of employment or for other transportation not involving the conduct of official business.
- all other direct and indirect disbursements to each officer not included elsewhere in this report. Include all direct and indirect

disbursements which were essentially for the personal benefit of the officer and not necessary for conducting official business of the labor organization. However, disbursements for occasional non-cash gifts of insubstantial value need not be included in Column (E) if reported in Item 50 (Contributions, Gifts, and Grants).

- travel advances that are not considered loans as explained in the instructions for Item 17.

Do not report the following disbursements in Item 23:

- loans to officers which must be reported in Item 25 (Loans Receivable) and Item 52 (Loans Made);
- benefits to officers which must be reported in Item 49 (Benefits);
- reimbursements to an officer for the purchase of investments or fixed assets, such as reimbursing an officer for a file cabinet purchased for office use, which must be reported in Item 51 (Purchase of Investments and Fixed Assets) and explained in Item 55;
- indirect disbursements for temporary lodging (room rent charges only) or transportation by public carrier necessary for conducting official business while the officer is in travel status away from his or her home and principal place of employment with the labor organization if payment is made by the organization directly to the provider or through a credit arrangement and these disbursements are reported in Item 47 (Office and Administrative Expense); however, charges other than room rent on hotel bills must be reported in Column (E);
- disbursements made by the labor organization to someone other than an officer as a result of transactions arranged by an officer in which property, goods, services, or other things of value were received by or on behalf of the labor organization rather than the officer, such as rental of offices and meeting rooms, purchase of office supplies, refreshments and other expenses of membership banquets or meetings, and food and refreshments for the entertainment of groups other than the officers and membership on official business;
- office supplies, equipment, and facilities furnished to officers by the labor organization for use in conducting official business; and
- maintenance and operating costs of the labor organization's assets other than automobiles owned or leased by the labor organization and assigned to officers.

Enter on Line 8, Columns (D) and (E) the totals from any continuation pages for Item 23.

Column (F): Add Columns (D) and (E) for each of Lines 1 through 8 and enter the totals in Column (F).

Add Lines 1 through 8, Columns (D) through (F), and enter the totals on Line 9.

Enter on Line 10 the total amount of withheld taxes, payroll deductions, and other deductions. Disbursements for the transmittal of withheld taxes, payroll deductions, and other deductions must be reported in Item 53 (Other Disbursements). Any portion of withheld taxes or any payroll or other deductions that have not been transmitted at the end of the reporting period are liabilities of the labor organization and must be reported in Item 34. Payroll or other deductions retained by the labor organization (such as repayments of loans made) must be fully explained in Item 55.

Subtract Line 10, from Line 9, Column (F), and enter the difference on Line 11. Enter the total from Line 11 in Item 44 (To Officers).

STATEMENT A – ASSETS AND LIABILITIES

ASSETS

24. CASH — Enter the total of all the labor organization's cash on hand and on deposit at the start and end of the reporting period in Columns (A) and (B), respectively. Include all cash on hand, such as undeposited cash, checks, and money orders; petty cash; and cash in safe deposit boxes. Cash on deposit includes funds in banks, credit unions, and other financial institutions, such as checking accounts, savings accounts, certificates of deposit, and money market accounts. Also include any interest credited to the labor organization's account during the reporting period.

NOTE: The checking account balances reported should be obtained from the labor organization's books as reconciled with the balances shown on bank statements.

25. LOANS RECEIVABLE — Enter the total of all loans owed to the labor organization at the start and end of the reporting period in Columns (A) and (B), respectively. Include all direct and indirect loans (whether or not evidenced by promissory notes or secured by mortgages) owed to the labor organization by individuals, business enterprises, benefit plans, and other entities including labor organizations. An example of an indirect loan is a disbursement by the labor organization to an educational institution for the tuition expense of an officer, employee, or member that must be repaid to the labor organization by that individual. Do not include investments in corporate bonds or mortgages purchased on a block basis through a bank or similar institution which must be reported in Item 27 (Investments).

26. U.S. TREASURY SECURITIES — Enter the total value of all U.S. Treasury securities as shown on the labor organization's books at the start and end of the reporting period in Columns (A) and (B), respectively. If the value reported is different from the original cost, the original cost must be reported in Item 55. Other U.S. Government obligations, state and municipal bonds, and foreign government securities must be reported in Item 27 (Investments).

27. INVESTMENTS — Enter in Columns (A) and (B), respectively, the total book value at the start and end of the reporting period of all investments other than U.S. Treasury securities. The book value of these investments is the lower of cost or market value.

28. FIXED ASSETS — Enter in Columns (A) and (B), respectively, the book value at the start and end of the reporting period of all fixed assets, such as land, buildings, automobiles, and office furniture and equipment owned by the labor organization. The book value of fixed assets is cost less depreciation.

29. OTHER ASSETS — Enter in Columns (A) and (B), respectively, the total value as shown on the labor organization's books at the start and end of the reporting period of all assets (such as accounts receivable, utility deposits, or travel advances which are not considered loans as explained in the instructions for Item 17) which have not been reported in Items 24 through 28.

30. TOTAL ASSETS — Add Items 24 through 29, Columns (A) and (B), and enter the respective totals in Item 30.

LIABILITIES

31. ACCOUNTS PAYABLE — Enter the total amount of the labor organization's accounts payable at the start and end of the reporting period in Columns (C) and (D), respectively. Ordinarily, accounts payable are those obligations incurred on

an open account for goods and services rendered.

32. LOANS PAYABLE — Enter in Columns (C) and (D), respectively, the total amount of all loans owed by the labor organization at the start and end of the reporting period, including those represented by notes. Do not include loans secured by mortgages or similar liens on real property (land or buildings) which must be reported in Item 33 (Mortgages Payable).

33. MORTGAGES PAYABLE — Enter the total amount of the labor organization's obligations that were secured by mortgages or similar liens on real property (land or buildings) at the start and end of the reporting period in Columns (C) and (D), respectively.

34. OTHER LIABILITIES — Enter in Columns (C) and (D), respectively, the total amount as shown on the labor organization's books at the start and end of the reporting period of all other liabilities not reported in Items 31 through 33.

35. TOTAL LIABILITIES – Add Items 31-34, Columns (C) and (D), and enter the respective totals in Item 35.

36. NET ASSETS — Subtract Item 35, Column (C) from Item 30, Column (A) and enter the difference in Item 36, Column (C). Subtract Item 35, Column (D) from Item 30, Column (B), and enter the difference in Item 36, Column (D).

STATEMENT B
RECEIPTS AND DISBURSEMENTS

Under Statement B, receipts must be recorded when money is actually received by the labor organization and disbursements must be recorded when money is actually paid out by the labor organization.

The purpose of Statement B is to report the flow of cash in and out of the labor organization during the reporting period. Transfers between separate bank accounts or between special funds of the labor organization, such as vacation or strike funds, do not represent the flow of cash in and out of the organization. Therefore, these transfers should not be reported as receipts and disbursements of the labor organization. For example, do not report a transfer of cash from the labor organization's savings account to its checking account. Likewise, the use of funds reported in Item 24 (Cash) to purchase certificates of deposit and the redemption of certificates of deposit should not be reported in Statement B.

Since Statement B reports all cash flowing in and out of the labor organization, "netting" is not permitted. "Netting" is the offsetting of receipts against disbursements and reporting only the balance (net) as either a receipt or disbursement. For example, if an officer received $1,000 from the labor organization for convention expenses, used only $800 and returned the remaining $200, the $1,000 disbursement must be reported in Item 23 and the $200 receipt must be reported in Item 42. It would be incorrect to report only an $800 net disbursement to the officer.

Receipts and disbursements by an agent on behalf of the labor organization are considered receipts and disbursements of the organization and must be reported in the same detail as other receipts and disbursements. For example, if the labor organization owns a building managed by a rental agent, the agent's rental receipts and disbursements for expenses must be reported on the organization's Form LM-3. Also, if the labor organization's parent body or an intermediate body functions as an agent receiving and disbursing funds of the labor organization to third parties, these receipts and disbursements must be reported on the labor organization's Form LM-3.

CASH RECEIPTS

37. DUES — Enter the total dues received by the labor organization. Include dues

received directly by the labor organization from members, dues received from employers through a checkoff arrangement, and dues transmitted to the organization by a parent body or other affiliate. Report the full dues received, including any portion that will later be transmitted to an intermediate or parent body as per capita tax. Also report in Item 37 payments in lieu of dues received from any nonmember employees as a condition of employment under a union security provision in a collective bargaining agreement.

If an intermediate or parent body receives dues checkoff directly from an employer on behalf of the labor organization, do not report in Item 37 the portion retained by that organization for per capita tax or other purposes, such as a special assessment. Any amounts retained by the intermediate body or parent body other than per capita tax must be explained in Item 55. For example, if the intermediate body or parent body retained $500 of the labor organization's dues checkoff as payment for supplies purchased from that body by the labor organization, this should be explained in Item 55 of the labor organization's Form LM-3 but the $500 should not be reported as a receipt or a disbursement on the labor organization's Form LM-3. However, if the intermediate body or parent body disbursed part of the labor organization's dues checkoff on the labor organization's behalf, this amount should be included in Item 37 and in the appropriate disbursement item on the labor organization's Form LM-3. For example, if the intermediate body or parent body disbursed $500 of the labor organization's dues checkoff to an attorney who had provided legal services to the labor organization, this amount should be reported in Item 37 and as a disbursement in Item 48 (Professional Fees) of the labor organization's Form LM-3.

Do not report in Item 37 dues that the labor organization collected on behalf of other organizations for transmittal to them. For example, if the labor organization received dues from a member of an affiliate who worked in the labor organization's jurisdiction, the dues collected on the affiliate's behalf must be reported in Item 42.

38. PER CAPITA TAX — Enter the total per capita tax received by the labor organization if the organization is an intermediate or parent body. Include the per capita tax portion of dues received directly by the labor organization from members of affiliates, per capita tax received from subordinates, either directly or through intermediaries, and the per capita tax portion of dues received through a checkoff arrangement whereby local dues are remitted directly to an intermediate or parent body by employers. Do not include dues collected on behalf of subordinate organizations for transmittal to them. For example, if a parent body received dues checkoff directly from an employer and returned the local's portion of the dues, the parent body must report the dues received on behalf of the local in Item 42 (Other Receipts).

39. FEES, FINES, ASSESSMENTS, AND WORK PERMITS — Enter your organization's receipts from fees, fines, assessments, and work permits. Receipts by the labor organization on behalf of affiliates for transmittal to them must be reported in Item 42 (Other Receipts).

40. INTEREST AND DIVIDENDS — Enter the total amount of interest and dividends received by the labor organization from savings accounts, bonds, mortgages, loans, investments, and all other sources.

41. SALE OF INVESTMENTS AND FIXED ASSETS — Enter the net amount received by the labor organization for all investments (including U.S. Treasury securities) and fixed assets sold. Do not include amounts received from the sale or redemption of investments that were promptly reinvested (i.e., "rolled over") during the reporting period.

The amount to be excluded for each reinvestment is the lower of the following:

- the original cost of the investment sold;
- the amount reinvested when the amount received from the sale was less than the investment's original cost; or
- the amount reinvested when only a portion of the amount received from the sale was actually reinvested.

Interest and dividends received during the reporting period must be reported in Item 40.Any portion of the amount due the labor organization (gross sales price less deductions for selling expenses) from sales of investments and fixed assets that has not been received by the end of the reporting period must be reported in Item 29 (Other Assets). However, if a mortgage or note is taken back, it must be reported in Item 25 (Loans Receivable).

42. OTHER RECEIPTS — Enter all receipts of the labor organization other than those reported in Items 37 through 41, including proceeds from the sale of supplies, loans obtained, repayments of loans made, rents, and funds collected for transmittal to third parties.

43. TOTAL RECEIPTS — Add Items 37 through 42 and enter the total in Item 43.

CASH DISBURSEMENTS

44. TO OFFICERS – Enter the total reported on Line 11 of Item 23.

45. TO EMPLOYEES — Enter the total of all salaries, allowances, travel advances which are not considered loans as explained in the instructions for Item 17, and other direct and indirect disbursements (less deductions for FICA, withheld taxes, etc.) to employees of the labor organization during the reporting period. Include disbursements to individuals other than officers who receive lost time payments even if the labor organization does not consider them to be employees or does not make any other direct or indirect disbursements to them.

NOTE: The following worktable may be used to determine the amount to be reported in Item 45:

A. Total Gross Salaries, Allowances, and Other Disbursements to Employees (before withheld taxes and other deductions)	$ _____ ___
B. Subtract: Total Withheld Taxes	$ _____
and Other Deductions	___
	$ _____
C. Net Disbursements to Employees	___

The amount on Line C should agree with the amount reported in Item 45.

46. PER CAPITA TAX — Enter the labor organization's total amount of per capita tax paid as a condition or requirement of affiliation with the labor organization's parent national or international union, state and local central bodies, a conference, joint or system board, joint council, federation, or other labor organization.

47. OFFICE AND ADMINISTRATIVE EXPENSE — Enter the labor organization's total disbursements for its ordinary office and administrative expenses, for example, rent, utilities, office supplies, postage, subscriptions, fidelity bond premiums, etc.

As explained in the instructions for Item 23, Column (E), disbursements for hotel rooms or for transportation by public carrier of officers and employees on official business may be reported in Item 47 when payment is made directly to the provider or through a credit arrangement. Do not include in Item 47 salaries, allowances, or other direct and indirect disbursements to officers and employees,

which must be reported in Items 44 and 45.

Also report in Item 47 all taxes assessed against and paid by the labor organization, including the labor organization's FICA taxes as an employer. Do not include disbursements for the transmittal of taxes withheld from the salaries of officers and employees, which must be reported in Item 53. Also, do not include indirect taxes, such as sales and excise taxes, for purchases reported in other disbursement items.

48. PROFESSIONAL FEES — Enter the labor organization's total disbursements for "outside" legal and other professional services (auditing, economic research, computer consulting, arbitration, etc.). Include any disbursements made for the expenses of individuals or firms providing professional services to the labor organization. Do not include direct and indirect disbursements to officers and employees, which must be reported in Items 44 and 45.

49. BENEFITS — Enter the total of all direct and indirect benefit disbursements made by the labor organization. Direct benefit disbursements are those made to officers, employees, members, and their beneficiaries from the labor organization's funds. Indirect benefit disbursements are those made from the labor organization's funds to a separate and independent entity, such as a trust or insurance company, which in turn and under certain conditions will pay benefits to the covered individuals. An example of an indirect benefit disbursement is the premium on group life insurance.

50. CONTRIBUTIONS, GIFTS, AND GRANTS — Enter the total of all disbursements for contributions, gifts, and grants made by the labor organization.

51. PURCHASE OF INVESTMENTS AND FIXED ASSETS — Enter the total disbursements for all investments and fixed assets purchased by the labor organization. Do not include any unpaid balances still owed which should be reported in Item 32 (Loans Payable) or Item 33 (Mortgages Payable). Also, do not include disbursements for reinvestment in U.S. Treasury securities and investments of amounts received from sales of U.S. Treasury securities and investments as explained in the instructions for Item 41 (Sale of Investments and Fixed Assets). The amount to be excluded from Item 51 for reinvestment must be the same as the amount that was excluded from Item 41 for reinvestment.

52. LOANS MADE — Enter the total disbursements for loans made by the labor organization. Include all direct and indirect loans made to individuals, business enterprises, and other organizations, regardless of amount.

NOTE: Section 503(a) of the LMRDA prohibits labor organizations from making direct or indirect loans to any officer or employee of the labor organization that results in a total indebtedness on the part of such officer or employee to the labor organization in excess of $2,000 at any time.

53. OTHER DISBURSEMENTS — Enter all disbursements made by the labor organization not reported in Items 44 through 52 including fees, fines, assessments, supplies for resale, repayments of loans obtained, transmittals of funds collected for third parties, educational and publicity expenses, withholding taxes, and payments for the account of affiliates and other third parties.

54. TOTAL DISBURSEMENTS – Add Items 44 through 53 and enter the total in Item 54.

NOTE: The following worktable may be used to determine that the figures for receipts, disbursements, and cash are correctly reported on the labor organization's Form LM-3:

A. Cash at Start of Reporting $

Period — Item 24, Column (A)	_____
B. Add: Total Receipts — Item 43	$ _____
C. Total of Lines A and B	$ _____
D. Subtract: Total Disbursements — Item 54	$ _____
E. Cash at End of Period	$ _____

If Line E does not equal the amount reported in Item 24, Column (B), there is an error in the labor organization's report which should be corrected, or the cash shortage or overage must be explained in Item 55.

ADDITIONAL INFORMATION AND SIGNATURES

55. ADDITIONAL INFORMATION — Use Item 55 to provide additional information as indicated on Form LM-3 and in these instructions. Enter the number of the item to which the information relates in the Item Number column. If there is not enough space in Item 55, report the additional information on a separate letter-size page(s). Be sure to include the following at the top of each page: the name of your organization, its 6-digit file number as reported in Item 1, and the ending date of the reporting period as reported on the second line of Item 2.

56 - 57. SIGNATURES — The completed Form LM-3 which is filed with OLMS must be signed by both the president and treasurer or corresponding principal officers of the labor organization. Original signatures are required on the Form LM-3 filed with OLMS; stamped or mechanical signatures are not acceptable. If the duties of the principal executive or principal financial officer are performed by an officer other than the president or treasurer, the report may be signed by the other officer. If the report is signed by an officer other than the president or treasurer, cross out the printed title, enter the correct title in Item 56 or 57, and explain in Item 55 why the president or treasurer did not sign the report. Enter the date the report was signed and the telephone number at which the signatories conduct official business; you do not have to report a private, unlisted telephone number.

XII. Labor Organizations That Have Ceased To Exist

If the labor organization has gone out of existence as a reporting labor organization, the last president and treasurer or the officials responsible for winding up the affairs of the labor organization must file a terminal financial report for the period from the beginning of the fiscal year to the date of termination. A terminal financial report must be filed if the labor organization has gone out of business by disbanding, merging into another organization, or being merged and consolidated with one or more labor organizations to form a new labor organization. A terminal financial report is not required if the labor organization changed its affiliation but continues to function as a separate reporting labor organization.

The terminal financial report may be filed on Form LM-3 if the labor organization filed its previous annual report on Form LM-3 and the labor organization's total annual receipts, as defined in Section II of these instructions, were less than $200,000 for the part of the last fiscal year during which the labor organization existed. (If total annual receipts were $200,000 or more, the labor organization must use Form LM-2 to file its terminal financial report.) The labor organization's terminal financial report must be submitted to the U.S. Department of Labor, Employment Standards Administration,

Office of Labor-Management Standards, 200 Constitution Avenue, NW, Room N-5616, Washington, DC 20210, within 30 days after the date of termination.

To complete a terminal report on Form LM-3, follow the instructions in Section XI and, in addition:

- Enter the date the labor organization ceased to exist in Item 2 after the word "Through."
- Enter an "X" in the box in Item 3(b) indicating that the labor organization ceased to exist during the reporting period and that this is the labor organization's terminal Form LM-3.
- Enter "3(b)" in the Item Number column in Item 55 and provide a detailed statement of the reason the labor organization ceased to exist. Also report in Item 55 plans for the disposition of the labor organization's cash and other assets, if any (for example, transfer of cash and assets to the parent body). Provide the name and address of the person or organization that will retain the records of the terminated organization. If the labor organization merged with another labor organization, report that organization's name, address, and 6-digit file number.

Contact the nearest OLMS field office listed below if you have questions about filing a terminal report.

IF YOU NEED ASSISTANCE

The Office of Labor-Management Standards has field offices located in the following cities to assist you if you have any questions concerning LMRDA and CSRA reporting requirements.

Atlanta, GA

Birmingham, AL*

Boston, MA

Buffalo, NY

Chicago, IL

Cincinnati, OH

Cleveland, OH

Dallas, TX

Denver, CO

Detroit, MI

Grand Rapids, MI*

Guaynabo, PR

Honolulu, HI

Houston, TX

Kansas City, MO

Los Angeles, CA

Miami (Ft. Lauderdale), FL

Milwaukee, WI

Minneapolis, MN

Nashville, TN

New Haven, CT*

New Orleans, LA

New York, NY

Newark (Iselin), NJ*

Philadelphia, PA

Pittsburgh, PA

St. Louis, MO

San Francisco, CA

Seattle, WA

Tampa, FL*

Washington, DC

Consult local telephone directory listings under United States Government, Labor Department, Office of Labor-Management

Standards, for the address and telephone number of the nearest field office.

*These OLMS field offices do not maintain copies of reports for public disclosure.

Information about OLMS, including key personnel and telephone numbers, how to obtain LM reports, compliance assistance materials, the text of the LMRDA, and related Federal Register and Code of Federal Regulations (CFR) documents, is also available on the Internet at: http://www.olms.dol.gov

U.S. Department of Labor
Employment Standards Administration
Office of Labor-Management Standards
Washington, DC 20210

FORM LM-4 LABOR ORGANIZATION ANNUAL REPORT

FOR USE ONLY BY LABOR ORGANIZATIONS WITH LESS THAN $10,000 IN TOTAL ANNUAL RECEIPTS

Form Approved
Office of Management and Budget
No. 1215-0188
Expires: XX-XX-XXXX

This report is mandatory under RL. 86-257, as amended. Failure to comply may result in criminal prosecution, fines, or civil penalties as provided by 29 U.S.C. 439 or 440.

READ THE INSTRUCTIONS CAREFULLY BEFORE PREPARING THIS REPORT.

For Official Use Only

1. FILE NUMBER

2. PERIOD COVERED
MO DAY YEAR
From
Through

3. (a) AMENDED - If this is an amended report correcting a previously filed report, check here:
(b) TERMINAL - If your organization ceased to exist and this is its terminal report, see Section X of the instructions and check here:

IMPORTANT

Peel off the address label from the back of the package and place it here.

If the label information is correct, leave items 4 through 8 blank.

If any of the label information is incorrect, complete items 4 through 8.

4. AFFILIATION OR ORGANIZATION NAME

5. DESIGNATION *(Local, Lodge, etc.)*

6. DESIGNATION NUMBER

7. UNIT NAME *(if any)*

8. MAILING ADDRESS *(Type or print in capital letters.)*

First Name

Last Name

P.O. Box or Building and Room Number *(if any)*

Number and Street

City

State

ZIP Code + 4

20. ADDITIONAL INFORMATION *(If more space is needed, attach additional pages properly identified.)*

Item Number

Each of the undersigned, duly authorized officers of the above labor organization, declares, under the applicable penalties of law, that all of the information submitted in this report (including the information contained in any accompanying documents) has been examined by the signatory and is, to the best of the undersigned's knowledge and belief, true, correct, and complete. *(See Section VI on penalties in the instructions.)*

21. SIGNED: _____ PRESIDENT *(If other title, see instructions.)*
/ / Date ( ) - Telephone Number

22. SIGNED: _____ TREASURER *(If other title, see instructions.)*
/ / Date ( ) - Telephone Number

Enter Amounts in Dollars Only - Do Not Enter Cents

FILE NUMBER: ___ – ___

Complete Items 9 through 19.

9. During the reporting period did the labor organization create or participate in the administration of a trust or other fund or organization, as defined in the instructions, which provides benefits for members or their beneficiaries? ..... Yes ☐ No ☐

10. During the reporting period, did your organization have any changes in its constitution and bylaws (other than rates of dues and fees) or in practices/procedures listed in the instructions? ..... Yes ☐ No ☐
(If the constitution and bylaws have changed, attach two new dated copies. If practices/procedures have changed, see the instructions.)

11. Did your organization change its rates of dues and fees during the reporting period? ..... Yes ☐ No ☐
(If "Yes," report the new rates in Item 20 on page 1.)

12. Did your organization discover any loss or shortage of funds or property during the reporting period? ..... Yes ☐ No ☐
(If "Yes," provide details in Item 20 on page 1. Answer "Yes" even if there has been repayment or recovery.)

13. Was your organization insured by a fidelity bond during the reporting period? ..... Yes ☐ No ☐

If "Yes:" enter the maximum amount recoverable under the bond for loss caused by any person. $ ☐☐☐☐☐☐

14. How many members did your organization have at the end of the reporting period? ☐☐☐☐☐☐

15. Enter the total value of your organization's assets at the end of the reporting period (cash, bank accounts, equipment, etc.). $ ☐☐☐☐☐☐

16. Enter the total liabilities (debts) of your organization at the end of the reporting period (unpaid bills, loans owed, etc.). $ ☐☐☐☐☐☐

17. Enter the total receipts of your organization during the reporting period (dues, fees, interest received, etc.). *(If $10,000 or more, your organization must file Form LM-2 or LM-3 instead of this form.)* $ ☐☐☐☐☐☐

18. Enter the total disbursements made by your organization during the reporting period (per capita tax, loans made, net payments to officers, payments for office supplies, etc.). $ ☐☐☐☐☐☐

19. Enter the total payments to officers and employees during the reporting period (gross salaries, lost time payments, allowances, expenses, etc.). $ ☐☐☐☐☐☐

Please be sure to:

- *Enter your union's 6-digit file number in Item 1.*
- *Report a time period of no more than one year in Item 2.*
- *Have your union's president and treasurer sign the Form LM-4 in items 21 and 22.*
- ***FILE ON TIME.** Form LM-4 must be filed within 90 days after the end of your union's fiscal year*

Public reporting burden for this collection of information is estimated to average 54 minutes per response, including the time for reviewing instructions, searching existing data sources, gathering and maintaining data needed, and completing and reviewing the collection of information. Persons are not required to respond to the collection of information unless it displays a currently valid OMB control number. Reporting of this information is mandatory and is required by the Labor-Management Reporting and Disclosure Act of 1959, as amended, for the purpose of public disclosure. As this is public information, there are no assurances of confidentiality. If you have any comments regarding this estimate or any other aspect of this information collection, including suggestions for reducing this burden, please send them to the U.S. Department of Labor, Employment Standards Administration, Office of Labor-Management Standards, Division of Interpretations and Standards, Room N-5605, 200 Constitution Avenue, NW, Washington, DC 20210.

INSTRUCTIONS FOR FORM LM-4 LABOR ORGANIZATION ANNUAL REPORT

Proposed Instructions

GENERAL INSTRUCTIONS

I. Who Must File

Every labor organization subject to the Labor-Management Reporting and Disclosure Act of 1959, as amended (LMRDA), the Civil Service Reform Act (CSRA), or the Foreign Service Act (FSA) must file a financial report, Form LM-2, LM-3, or LM-4, each year with the Office of Labor-Management Standards (OLMS) of the U.S. Department of Labor's Employment Standards Administration. These laws cover labor organizations that represent employees who work in private industry, employees of the U.S. Postal Service, and most Federal government employees. Labor organizations that represent only state, county, or municipal government employees are not covered by these laws and, therefore, are not required to file, except that any "conference, general committee, joint or system board, or joint council" that is subordinate to a national or international labor organization is a labor organization under the LMRDA and therefore is required to file a financial report if the national or international labor organization is a labor organization engaged in an industry affecting commerce within the meaning of section 3(j) of the LMRDA. If you have a question about whether the labor organization is required to file, contact the nearest OLMS field office listed on page X of these instructions.

II. What Form to File

Labor organizations with total annual receipts of less than $10,000 may file the abbreviated 2-page annual report Form LM-4, if not in trusteeship as defined in Section VIII of these instructions. The term "total annual receipts" means all financial receipts of the labor organization during its fiscal year, regardless of the source, including receipts of any special funds. Funds of a trust in which the labor organization is interested should not be included in the total annual receipts considered when determining which form to file.

Labor organizations with $10,000 or more in total annual receipts cannot use Form LM-4. However, labor organizations with total annual receipts less than $200,000 and not in trusteeship may file the simplified 4-page Form LM-3. Labor organizations with $200,000 or more in total annual receipts and those in trusteeship must file the more detailed Form LM-2.

III. When to File

Form LM-4 must be filed within 90 days after the end of the labor organization's fiscal year (12-month reporting period). The law does not authorize the U.S.

Department of Labor to grant an extension of time for filing reports for any reason.

If the labor organization went out of existence during its fiscal year, a terminal financial report must be filed within 30 days after the date it ceased to exist. See Section X of these instructions for information on filing a terminal financial report.

IV. Where to File

One completed Form LM-4 and any required attachments must be filed with the U.S. Department of Labor at the following address:

U.S. Department of Labor
Employment Standards Administration
Office of Labor-Management Standards
200 Constitution Avenue, NW, Room N-5616
Washington, DC 20210

If available, use the pre-addressed envelope enclosed with this report package to file Form LM-4.

V. Public Disclosure

The LMRDA requires that the U.S. Department of Labor make labor organization financial reports available for inspection by the public. Reports may be viewed and downloaded from the OLMS Web site at www.union-reports.dol.gov. Copies of reports and union constitutions and bylaws can also be ordered at the same Web site. Reports may also be examined and copies purchased at the OLMS Public Disclosure Room at the above address in Section IV (How To File) or at the OLMS field office in whose jurisdiction the reporting organization is located. See page X of these instructions for a list of OLMS field offices.

VI. Officer Responsibilities and Penalties

The president and treasurer or the corresponding principal officers of the labor organization required to sign Form LM-4 are personally responsible for its filing and accuracy. Under the LMRDA, officers are subject to criminal penalties for willful failure to file a required report and for false reporting. False reporting includes making any false statement or misrepresentation of a material fact while knowing it to be false, or for knowingly failing to disclose a material fact in a required report or in the information required to be contained in it or in any information required to be submitted with it. Under the CSRA and FSA and implementing regulations, false reporting and failure to report may result in administrative enforcement action and litigation. The officers responsible for signing Form LM-4 are also subject to criminal penalties for false reporting under section 1001 of Title 18 of the United States Code.

VII. Recordkeeping

The officers required to file Form LM-4 are responsible for maintaining records that will provide in sufficient detail the information and data necessary to verify the accuracy and completeness of the report. The records must be kept for at least 5 years after the date the report is filed. Any record necessary to verify, explain, or clarify the report must be retained, including, but not limited to, vouchers, worksheets, receipts, and applicable resolutions.

VIII. Labor Organizations in Trusteeship

Any labor organization that has placed a

subordinate labor organization in trusteeship is responsible for filing the subordinate's annual financial report. A trusteeship is defined in section 3(h) of the LMRDA as "any receivership, trusteeship, or other method of supervision or control whereby a labor organization suspends the autonomy otherwise available to a subordinate body under its constitution or bylaws."

Annual financial reports filed for any labor organization in trusteeship must be filed on Form LM-2 rather than Form LM-4. The report must be signed by the president and treasurer or corresponding principal officers of the labor organization that imposed the trusteeship and by the trustees of the subordinate labor organization. Information on filing Form LM-2 can be obtained on the OLMS Web site at www.olms.dol.gov or from the nearest OLMS field office listed on page X of these instructions.

IX. Trusts In Which A Labor Organization Is Interested

The labor organization must disclose the existence of all trusts in which the labor organization is interested in Item 20 as required by the instructions for Item 9. The labor organization must also file a Form T-1 disclosing the assets, liabilities, receipts, and disbursements of a significant trust in which the labor organization is interested.

A trust in which a labor organization is interested is defined by statute as

> ...a trust or other fund or organization (1) which was created or established by a labor organization, or one or more of the trustees or one or more members of the governing body of which is selected or appointed by a labor organization, and (2) a primary purpose of which is to provide benefits for the members of such labor organization or their beneficiaries.

29 U.S.C. 402(l). The definition of a trust in which a labor organization is interested may include, but is not limited to, joint funds administered by a union and an employer pursuant to a collective bargaining agreement, educational or training institutions, banks or credit unions created for the benefit of union members, and redevelopment or investment groups established by the union for the benefit of its members. The determination whether a particular entity is a trust in which a labor organization is interested must be based on the facts in each case. A trust will be considered significant, and therefore must be reported on Form T-1, if (1) it has annual receipts of $200,000 or more during the trust's most recent fiscal year, and (2) the labor organization's financial contribution to the trust or the contribution made on the labor organization's behalf, or as a result of a negotiated agreement to which the labor organization is a party, is $10,000 or more annually.

If a trust has annual receipts of less than $200,000 or if the labor organization's financial contribution to a trust, or the contribution made on the labor organization's behalf, or as a result of a negotiated agreement to which the labor organization is a party, is less than $10,000 annually, the labor organization need only report the existence of the trust and the amount of the labor organization's contribution or the contribution made on the labor organization's behalf, or as a result of a negotiated agreement to which the labor organization is a party. This information should be reported in Item 20 as required by the instructions for Item 9 and, if the contribution was made by the labor organization itself, in Item 18.

No Form T-1 should be filed for any labor organization that already files a Form LM-2, LM-3, or LM-4, nor should a report be filed for any entity that is expressly

exempted from reporting in the Act. No separate report need be filed for Political Action Committee (PAC) funds if publicly available reports on the PAC funds are filed with a Federal or state agency, or for a political organization for which reports are filed with the Internal Revenue Service pursuant to 26 U.S.C. 527. No separate report is required for an employee benefit plan that filed a complete and timely annual report pursuant to the requirements of the Employee Retirement Income Security Act of 1974 (ERISA), 29 U.S.C. 1023, 1024(a), and 1030, and 29 C.F.R. 2520.103-1, for the plan year ending with or within the year preceding the year covered by the reporting union's LM-4, or if annual audits are freely available on demand under § 302(c)(5)(B) of the LMRA, 29 U.S.C.186(c)(5)(B).

Form T-1 must be filed within 90 days after the expiration of the trust's fiscal year. If the trust's fiscal year is not the same as the labor organization's fiscal year, state when the trust's fiscal year ends in item 20 as required by the instructions for Item 9. See Instructions for Form T-1, Trust Annual Report.

Questions regarding these reporting requirements should be directed to the OLMS Division of Interpretations and Standards, which can be reached at the above address, by email at olms-mail@dol-esa.gov, by phone at 202-693-0123 or by fax at 202-693-1340. The Department will publish additional information giving further practical guidance on the reporting requirements for trusts on the OLMS Web site at www.olms.dol.gov.

Examples of a trust in which a labor organization is interested may include, but are not limited to, the following entities:

Example A: The Redevelopment Corporation – A labor organization creates an entity named the Redevelopment Corporation, or appoints one or more of the members of the governing board of the Corporation, which is established primarily to enable members of the labor organization to obtain low cost housing constructed with federal Housing and Urban Development (HUD) grants. The Redevelopment Corporation must be reported as a trust in which the labor organization or organizations that created it, or that appointed members to its governing board, have an interest. A labor organization that neither participated in the creation of the Corporation, nor appointed members of its governing board, but loaned money to the Corporation to use as matching money for HUD grants need not report the Corporation as a trust in which it is interested.

Example B: The Educational Institute – Five reporting labor organizations form the Educational Institute to provide educational services primarily for the benefit of their members. Similar services are also provided to the general public. Each labor organization contributes funds to start the Educational Institute, which will then offer various educational programs that will generate revenue. Each labor organization that participated in forming the Institute, or that appoints a member to its governing body, must report the Educational Institute as a trust in which it is interested.

Example C: The Bank – A reporting labor organization forms a bank that is chartered and licensed under Federal and state laws, or selects a member of the board of directors of a bank that is already in existence, for the purpose of ensuring that banking services are available to members at reasonable cost, or as an investment for the purpose of increasing funds available for union activities for the benefit of union members. Any labor organization that participated in forming the bank, or that appoints a member to the bank's board of directors must report the bank as a trust in which it has an interest.

Example D: Joint Funds – A reporting labor organization that forms a "joint fund" with a large national manufacturer to offer a variety of training and jobs skills programs for members of the labor organization, or appoints a member to the governing body of such a fund, must report the joint fund as a trust in which the labor organization has an interest.

Example E: 302(c)(5) through (9) Plans – A reporting labor organization forms a plan permitted under Section 302(c)(5) through (9) of the LMRA (29 U.S.C. 186 (c)(5) through (9)), and files a complete annual financial report as required under ERISA. The labor organization reports only that the plan exists and states where the ERISA annual financial report may be viewed. This information should be reported in Item 20. No Form T-1 need be filed even if more than $10,000 was contributed to the plan on the labor organization's behalf.

X. Completing Form LM-4

Number of Copies

Complete one of the two blank copies of Form LM-4 included in this report package; do not use a photocopy of this form. The completed Form LM-4 must be filed with OLMS. A copy should also be maintained in the labor organization's records.

Address Label

If this report package was mailed to you with an address label, peel off the label and place it in the designated box on page 1 of the form. Use the pre-printed label even if the information on it is incorrect.

If this report package does not have an address label or if any of the information on the label is incorrect, complete Items 4 through 8 in their entirety. If the label information is correct, leave Items 4 through 8 blank.

Information Entry

Entries on Form LM-4 should be typed or clearly printed in black ink. Do not use a pencil or any other color ink.

For items displaying separate boxes, enter only one letter or number in each box as illustrated below. Use all capital letters and print or type inside the boxes. Leave a blank box between words and/or numbers as appropriate. Print clearly so the information can be accurately scanned.

Entering Number and Street:

1404 REDWOOD COURT

Report amounts in Items 15 through 19 in dollars only. Do not enter cents. Round cents to the nearest dollar. Enter a single "0" in the boxes for reporting dollars if the labor organization has nothing to report.

Entering Dollars:

do not enter cents

Entering Zero:

For items requiring a "Yes" or "No" answer, enter an "X" in the appropriate box. Do not use check marks or other marks.

Entering X:

Yes	No
X	

ITEMS 1–22

1. FILE NUMBER — Enter the 6-digit file number that OLMS assigned to the labor organization. If this Form LM-4 was mailed to you with an address label, the

labor organization's file number is the 6-digit number on the first line of the label. If you do not have a label and you cannot obtain the number from prior reports filed by the labor organization, the number can be obtained from the OLMS Web site at www.union-reports.dol.gov or by contacting the nearest OLMS field office listed on page X of these instructions. The labor organization's 6-digit file number must also be entered in the File Number boxes at the top of page 2 of Form LM-4.

2. PERIOD COVERED — Enter the beginning and ending dates of the period covered by this report. The labor organization's report should never cover more than a 12-month period. For example, if your organization's 12-month fiscal year begins on January 1 and ends on December 31, enter these dates as 01 01 20XX and 12 31 20XX. It would be incorrect to enter January 1 of one year through January 1 of the next year.

If the labor organization changed its fiscal year, enter in Item 2 the ending date for the period of less than 12 months, which is the labor organization's new fiscal year ending date, and report in Item 20 that the labor organization changed its fiscal year. For example, if the labor organization's fiscal year ending date changes from June 30 to December 31, a report must be filed for the partial year from July 1 to December 31. Thereafter, the labor organization's report should cover a full 12-month period from January 1 to December 31.

3. AMENDED OR TERMINAL REPORT — Enter an "X" in the box in Item 3(a) if the labor organization is filing an amended report correcting a previously filed report. Enter an "X" in the box in Item 3(b) if the labor organization has gone out of business by disbanding, merging into another labor organization, or being merged and consolidated with one or more labor organizations to form a new labor organization, and this is the labor organization's terminal report. Be sure the date the labor organization ceased to exist is entered in Item 2 after the word "Through." See Section X of these instructions for more information on filing a terminal report.

4. AFFILIATION OR ORGANIZATION NAME — Enter the name of the national or international labor organization that granted the reporting organization a charter. If the reporting organization has no such affiliation, enter the name of the labor organization as currently identified in the organization's constitution and bylaws or other organizational documents.

5. DESIGNATION — Enter the designation that specifically identifies the labor organization, such as Local, Lodge, Branch, Joint Board, Joint Council, District Council, etc.

6. DESIGNATION NUMBER — Enter the number or other identifier, if any, by which the labor organization is known.

7. UNIT NAME — Enter any additional or alternate name by which the labor organization is known, such as "Chicago Area Local."

8. MAILING ADDRESS — Enter the current address where mail is most likely to reach the labor organization as quickly as possible. Be sure to indicate the first and last name of the person, if any, to whom such mail should be sent and include any building and room number.

9. TRUSTS OR FUNDS — Answer "Yes" to Item 9, if the labor organization has an interest in a trust as defined in 29 U.S.C. 402(l) (See Section IX of these instructions). Provide in Item 20 (Additional Information) the full name, address, and purpose of each trust. Also include in Item 20 the fiscal year ending

date for any trust for which a Form T-1 is filed if the trust's fiscal year is different from that of the labor organization. If no Form T-1 is required to be filed on the trust because (1) the trust had annual receipts of less than $200,000 during the trust's most recent fiscal year or (2) the labor organization's financial contribution to the trust or the contribution made on the labor organization's behalf, or as a result of a negotiated agreement to which the labor organization is a party, is less than $10,000, the labor organization should also report the amount of the contribution in Item 20 and, if the contribution was made by the labor organization itself, in Item 18. Additionally, if no Form T-1 is filed because financial information is already available as a result of the disclosure requirements of another federal statute, list the name of any government agency, such as the Securities and Exchange Commission (SEC) or the Pension and Welfare Benefits Administration (PWBA) of the Department of Labor, with which the trust files a publicly available report, and the relevant file number of the trust, or otherwise indicate where the relevant report may be viewed. See Instructions for Form T-1, Trust Annual Report, for guidance on reporting the assets, liabilities, receipts, and disbursements of these entities.

10. CHANGES IN CONSTITUTION AND BYLAWS OR PRACTICES/PROCEDURES — If Item 10 is answered "Yes" because the labor organization's constitution and bylaws were changed during the reporting period (other than rates of dues and fees), attach two dated copies of the new constitution and bylaws to the Form LM-4 the labor organization submits to OLMS.

If the labor organization is governed by a uniform constitution and bylaws prescribed by the labor organization's parent national or international body, the organization's parent body may file the constitution and bylaws on the reporting organization's behalf. If the parent body files a constitution and bylaws on behalf of the reporting organization, answer Item 10 "Yes" and state that fact in Item 20.

If Item 10 is answered "Yes" because the labor organization changed any of the practices/procedures listed below during the reporting period and the practices/procedures are not described in the labor organization's constitution and bylaws, the organization must file an amended Form LM-1 (Labor Organization Information Report) with its Form LM-4 to update information on file with OLMS:

- qualifications for or restrictions on membership;
- levying assessments;
- participating in insurance or other benefit plans;
- authorizing disbursement of labor organization funds;
- auditing financial transactions of the labor organization;
- calling regular and special meetings;
- authorizing bargaining demands;
- ratifying contract terms;
- authorizing strikes;
- disciplining or removing officers or agents for breaches of their trust;
- imposing fines and suspending or expelling members including the grounds for such action and any provision made for notice, hearing, judgment on the evidence, and appeal procedures;
- selecting officers and stewards and any representatives to other bodies composed of labor organizations' representatives;
- invoking procedures by which a member

may protest a defect in the election of officers (including not only procedures for initiating an election protest but also all procedures for subsequently appealing an adverse decision, e.g., procedures for appeals to superior or parent bodies, if any); and

- issuing work permits.

Contact the nearest OLMS field office listed on page X of these instructions to obtain blank copies of Form LM-1.

NOTE: *Federal employee labor organizations subject solely to the Civil Service Reform Act or Foreign Service Act are not required to submit an amended Form LM-1 to describe revised or changed practices/procedures.*

11. CHANGES IN RATES OF DUES AND FEES — Answer Item 11 "Yes" if the labor organization changed its rates of dues and fees during the reporting period. If Item 11 is answered "Yes," report the rates of dues and fees in Item 20. If more than one rate applies, report the minimum and maximum rates. Also report the calendar basis for payment (per month, per year, etc.).

Dues and fees include initiation fees charged to new members, fees (other than dues) from transferred members, fees for work permits, and regular dues or fees. Include only the dues and fees of regular members and not the dues and fees of members with special rates, such as apprentices, retirees, or unemployed members. Answer "No" if the labor organization did not change its rates of dues and fees during the reporting period.

12. LOSSES OR SHORTAGES — Answer Item 12 "Yes" if any loss or shortage of funds or other property of the labor organization was discovered during the reporting period whether or not there has been repayment or an agreement to make restitution. If Item 12 is answered "Yes," describe the loss or shortage in detail in Item 20 including such information as the amount of the loss or shortage of funds or a description of the property that was lost, how it was lost, and to what extent, if any, there has been an agreement to make restitution or any recovery by means of repayment, fidelity bond, insurance, or other means. Answer "No" if no losses or shortages were discovered.

13. FIDELITY BOND — Answer Item 13 "Yes" if the labor organization was insured by a fidelity bond against losses through fraud or dishonesty during the reporting period. If Item 13 is answered "Yes," enter the maximum amount recoverable for a loss caused by any officer, employee, or agent of the labor organization who handled the organization's funds. Answer "No" if the labor organization was not insured by a fidelity bond during the reporting period.

NOTE: *Section 502(a) of the LMRDA requires every officer, employee, or agent of a labor organization (which has property and annual financial receipts over $5,000 in value) who handles funds or other property of the organization to be bonded. The amount of the bond must be at least 10% of the value of the funds handled by the individual during the last reporting period. The bond must be obtained from a surety company approved by the Secretary of the Treasury. If you have any questions or need more information about bonding requirements, contact the nearest OLMS field office listed on page X of these instructions.*

14. NUMBER OF MEMBERS — Enter the number of members in the labor organization at the end of the reporting period. Include all categories of members who pay dues. Do not include nonmember employees who make payments in lieu of dues as a condition of employment under a union security

provision in a collective bargaining agreement.

15. ASSETS — Enter the total value of all the labor organization's assets at the end of the reporting period including, for example, cash on hand and in banks, property, loans owed to the labor organization, investments, office furniture, automobiles, and anything else owned by the labor organization. Enter "0" if the labor organization had no assets at the end of the reporting period.

16. LIABILITIES — Enter the total amount of all the labor organization's liabilities at the end of the reporting period including, for example, unpaid bills, loans owed, total amount of mortgages owed, and other debts of the labor organization. Enter "0" if the labor organization had no liabilities at the end of the reporting period.

17. RECEIPTS — Enter the total amount of all receipts of the labor organization during the reporting period including, for example, dues, fees, fines, assessments, interest, dividends, rent, money from the sale of assets, and loans received by the labor organization. Also include payments in lieu of dues received from any nonmember employees as a condition of employment under a union security provision in a collective bargaining agreement. Enter "0" if the labor organization had no receipts during the reporting period.

NOTE: *If the labor organization's annual receipts were $10,000 or more, the labor organization is not eligible to file Form LM-4 and must report on Form LM-2 or Form LM-3 as explained in Section II of these instructions.*

18. DISBURSEMENTS — Enter the total amount of all disbursements made by the labor organization during the reporting period including, for example, net payments to officers and employees, per capita tax and any other fees or assessments which the labor organization paid to any other organization, payments for administrative expenses, loans made by the labor organization, and taxes paid. Enter "0" if the labor organization made no disbursements during the reporting period.

19. PAYMENTS TO OFFICERS AND EMPLOYEES — Enter the total amount of all payments to officers and employees made by the labor organization during the reporting period. The amount should include, for example, gross salaries (before tax withholdings and other payroll deductions); lost time pay; monthly, weekly, or daily allowances; and disbursements for conducting official business of the organization as well as disbursements which were essentially for the personal benefit of the officer or employee. Enter "0" if the labor organization made no payments to officers or employees during the reporting period.

NOTE: *Section 503(a) of the LMRDA prohibits labor organizations from making direct or indirect loans to any officer or employee of the labor organization that results in a total indebtedness on the part of such officer or employee to the labor organization in excess of $2,000 at any time.*

20. ADDITIONAL INFORMATION — Use Item 20 to provide additional information as indicated in Items 9, 10, 11, 12, 21, and 22 and in Section X of these instructions. Enter the number of the item to which the information relates in the Item Number column. If there is not enough space in Item 20, report the additional information on a separate letter-size page(s). At the top of each page

clearly print the name of the labor organization, its 6-digit file number as reported in Item 1, and the ending date of the reporting period as reported on the second line of Item 2.

21–22. SIGNATURES — The completed Form LM-4 which is filed with OLMS must be signed by both the president and treasurer or corresponding principal officers of the labor organization. Original signatures are required on the Form LM-4 filed with OLMS; stamped or mechanical signatures are not acceptable. If an officer other than the president or treasurer performs the duties of the principal executive or principal financial officer, the other officer may sign the report. If an officer other than the president or treasurer signs the report, cross out the printed title, enter the correct title in Item 21 or 22, and explain in Item 20 why the president or treasurer did not sign the report. Enter the date the report was signed and the telephone number at which the signatories conduct official business; you do not have to report a private, unlisted telephone number.

XI. Labor Organizations That Have Ceased to Exist

If the labor organization has gone out of existence as a reporting labor organization, the last president and treasurer or the officials responsible for winding up the affairs of the labor organization must file a terminal financial report for the period from the beginning of the fiscal year to the date of termination. A terminal financial report must be filed if the labor organization has gone out of business by disbanding, merging into another organization, or being merged and consolidated with one or more labor organizations to form a new labor organization. A terminal financial report is not required if the labor organization changed its affiliation but continues to function as a separate reporting labor organization.

The terminal financial report may be filed on Form LM-4 if the labor organization filed its previous annual report on Form LM-4 and the labor organization's total annual receipts, as defined in Section II of these instructions, were less than $10,000 for the part of the last fiscal year during which the labor organization existed. (If total annual receipts were $10,000 or more, the labor organization must use Form LM-2 or LM-3 to file its terminal financial report as explained in Section II of these instructions.) The labor organization's terminal financial report must be submitted to the U.S. Department of Labor, Employment Standards Administration, Office of Labor-Management Standards, 200 Constitution Avenue, NW, Room N-5616, Washington, DC 20210, within 30 days after the date of termination.

To complete a terminal report on Form LM-4, follow the instructions in Section X and, in addition:

- Enter the date the labor organization ceased to exist in Item 2 after the word "Through."
- Enter an "X" in the box in Item 3(b) indicating that the labor organization ceased to exist during the reporting period and that this is the labor organization's terminal Form LM-4.
- Enter "3(b)" in the Item Number column in Item 20 and provide a detailed statement of the reason the labor organization ceased to exist. Also report in Item 20 plans for the disposition of the labor organization's cash and other assets, if any (for example, transfer of cash and assets to the parent body). Provide the name and address of the person or organization that will retain the records of the terminated organization. If the labor organization merged with another labor

organization, give that organization's name, address, and 6-digit file number.

Contact the nearest OLMS field office listed below if you have questions about filing a terminal report.

If You Need Assistance

The Office of Labor-Management Standards has field offices located in the following cities to assist you if you have any questions concerning LMRDA and CSRA reporting requirements.

Atlanta, GA
*Birmingham, AL
Boston, MA
Buffalo, NY
Chicago, IL
Cincinnati, OH
Cleveland, OH
Dallas, TX
Denver, CO
Detroit, MI
*Grand Rapids, MI
Guaynabo, PR
Honolulu, HI
*Houston, TX
Kansas City, MO
Los Angeles, CA
Miami (Ft. Lauderdale), FL
Milwaukee, WI
Minneapolis, MN
Nashville, TN
*New Haven, CT
New Orleans, LA
New York, NY
*Newark (Iselin), NJ
Philadelphia, PA
Pittsburgh, PA
St. Louis, MO
San Francisco, CA
Seattle, WA
*Tampa, FL
Washington, DC

Consult local telephone directory listings under United States Government, Labor Department, Office of Labor-Management Standards, for the address and telephone number of the nearest field office.

*These OLMS field offices do not maintain copies of reports for public disclosure.

Information about OLMS, including key personnel and telephone numbers, how to obtain LM reports, compliance assistance materials, the text of the LMRDA, and related Federal Register and Code of Federal Regulations (CFR) documents, is also available on the Internet at:

http://www.olms.dol.gov

[FR Doc. 02–32445 Filed 12–23–02; 2:44 pm]
BILLING CODE 4510–CP–C

Federal Register

Friday,
December 27, 2002

Part IV

Department of Transportation

National Highway Traffic Safety Administration

49 CFR Part 571

Federal Motor Vehicle Safety Standards; Platform Lift Systems for Accessible Motor Vehicles, Platform Lift Installation on Motor Vehicles; Final Rule

DEPARTMENT OF TRANSPORTATION

National Highway Traffic Safety Administration

49 CFR Part 571

[Docket No. NHTSA–02–13917; Notice 1]

RIN 2127–AD50

Federal Motor Vehicle Safety Standards; Platform Lift Systems for Accessible Motor Vehicles, Platform Lift Installations on Motor Vehicles

AGENCY: National Highway Traffic Safety Administration (NHTSA), Department of Transportation.

ACTION: Final rule.

SUMMARY: This document adopts a new rule establishing two new safety standards: An equipment standard specifying requirements for platform lifts; and a vehicle standard for all vehicles equipped with such lifts. The new equipment standard will require platform lift manufacturers to ensure that their lifts meet minimum platform dimensions and maximum size limits on platform protrusions and gaps between the platform and either the vehicle floor or the ground. The standard also requires handrails, a threshold warning signal, and retaining barriers for lifts. Performance tests are specified for wheelchair retention on the platform, lift strength, and platform slip resistance. A set of interlocks is prescribed to prevent accidental movement of a lift and the vehicle on which the lift is installed. The vehicle standard will require vehicle manufacturers who install lifts to use lifts meeting the equipment standard, to install them in accordance with the lift manufacturer's instructions, and to ensure that specific information is made available to lift users. The purpose of the two standards is to prevent injuries and fatalities during lift operation and to promote the uniformity of Federal standards and guidelines for platform lifts.

DATES: *Effective Date:* This rule is effective December 27, 2004.

The incorporation by reference of the publications listed in the rule is approved by the Director of the Federal Register as of December 27, 2004.

Petitions: Petitions for reconsideration must be received by February 10, 2003.

ADDRESSES: Petitions for reconsideration should refer to the docket and notice number of this document and be submitted to: Administrator, National Highway Traffic Safety Administration, 400 Seventh Street, SW., Washington, DC 20590.

FOR FURTHER INFORMATION CONTACT: For non-legal issues, you may call William Evans, Office of Crash Avoidance Standards, at (202) 366–2272.

For legal issues, you may call Rebecca MacPherson, Office of the Chief Counsel, at (202) 366–2992.

You may send mail to both of these officials at National Highway Traffic Safety Administration, 400 Seventh St., SW., Washington, DC 20590.

SUPPLEMENTARY INFORMATION:

Table of Contents

I. Background
II. Summary of the SNPRM
III. Summary of the final rule and key differences between it and the SNPRM
A. Manufacturer responsibilities under the final rule
1. Platform lift manufacturers
2. Vehicle manufacturers
B. Platform lift requirements
IV. Summary of public comments
V. Need for safety standards for platform life systems
VI. Differing safety needs for private and public use platform lifts
VII. Effective dates
VIII. Platform lift requirements
A. Threshold warning signal
B. Platform lift operational requirements
1. Maximum platform velocity
2. Maximum platform acceleration
3. Maximum noise level of public use lifts
C. Environmental resistance
D. Platform requirements
1. Unobstructed platform operating volume
2. Platform surface protrusions
3. Gaps, transitions, and openings
4. Platform deflection
5. Edge guards
6. Wheelchair retention
7. Inner roll stop
8. Handrails
9. Platform markings on public use lifts
10. Platform lighting on public use lifts
11. Platform slip resistance
E. Structural Integrity
1. Fatigue endurance
2. Proof load
3. Ultimate load
F. Platform free fall limits
G. Control systems
H. Jacking prevention
I. Backup operation
J. Interlocks
K. Operations counter
L. Owner's manual insert
M. Installation instruction insert
N. Test conditions and procedures
1. Test devices
2. Static load test I—working load
3. Static load test II—proof load
4. Static load test III—ultimate load
5. Interlock test procedures
IX. Vehicle requirements
X. Benefits of the final rule
XI. Costs of the final rule
XII. Miscellaneous Issues
A. Axle weight limitations
B. Definitions in the FMVSS No. 403
C. Delayed compliance with the ADA
XIII. Rulemaking Analyses and Notices
Appendix to preamble

I. Background

We initiated this rulemaking proceeding concerning safety standards for platform lifts to provide practicable, performance-based requirements and compliance procedures for the regulations promulgated by the Department of Transportation (DOT) under the Americans with Disabilities Act of 1990 [1] (ADA) and to ensure the safety of vehicles equipped with those lift systems. Under our statutory authority,[2] we establish Federal motor vehicle safety standards (FMVSS) to reduce motor vehicle crashes and the resulting deaths, injuries, and economic losses. Each standard must be practicable, meet the need for motor vehicle safety, and be stated in objective terms.[3] The ADA does not relieve us of these requirements. Our authority extends to both motor vehicles and motor vehicle equipment. Further, we are authorized to regulate non-operational vehicle safety *i.e.*, safety while being maintained, serviced or repaired or while being entered or exited) as well as operational vehicle safety (*i.e.*, safety while being operated on public roads).

Today, we are adopting a final rule that establishes two new safety standards. The first, FMVSS No. 403, Platform lifts systems for motor vehicles, establishes minimum performance standards for platform lifts designed for installation on a motor vehicle. The second, FMVSS No. 404, Platform lift installations in motor vehicles, places specific requirements on vehicle manufacturers or alterers who install the lifts on new vehicles. Under this final rule, lift manufacturers will have to certify that their lifts meet the requirements of FMVSS No. 403, and manufacturers or alterers of new vehicles will have to ensure that the lifts are installed according to the lift manufacturer's instructions by certifying compliance with FMVSS No. 404. Affixing a label on the lift will effect the certification of compliance with FMVSS No. 403. Certification of compliance with FMVSS No. 404 will be on the certification label already required of vehicle manufacturers and alterers under 49 CFR part 567.

Title II of the ADA requires newly purchased, leased, or remanufactured vehicles purchased by public entities, like municipalities and regional transit authorities, and used in fixed route bus

[1] Pub. L. 101–336, 42 U.S.C. sections 12101, *et seq.*

[2] Formerly the National Traffic and Motor Vehicle Safety Act, currently codified as 49 U.S.C. sections 30101 *et seq.*

[3] 49 U.S.C. 30111.

systems to be readily accessible to and usable by individuals with disabilities, including individuals who use wheelchairs, canes, and walkers. Title II also requires a public entity operating a demand-responsive transportation system to obtain accessible vehicles unless the system, when viewed in its entirety, provides individuals with disabilities with a level of service equivalent to that provided for individuals without disabilities. Title II further requires public entities operating a fixed route bus system (other than a bus system which provides only commuter service) to provide complementary paratransit and other special transportation services to individuals with disabilities. Title III requires that designated public transportation, provided by private entities, be readily accessible to and usable by individuals with disabilities, including individuals who use wheelchairs, canes, or walkers.

The ADA directed DOT to issue regulations to implement the transportation vehicle provisions in Titles II and III. Additionally, the ADA required the Architectural and Transportation Barriers Compliance Board (ATBCB) to issue guidelines to assist DOT in establishing these regulations.[4] The regulations issued by DOT must be consistent with those guidelines.[5] On September 6, 1991, ATBCB published its final guidelines which specify that to be considered accessible, a vehicle must be equipped with a lift or other level change mechanism and have sufficient clearance to permit a wheelchair to reach a wheelchair securement location once it is on the vehicle. (56 FR 45530) ATBCB stated that ''NHTSA is the appropriate agency to define safety tests'' for platform lifts.[6] On the same day, DOT implemented the ADA by publishing a final rule establishing accessibility regulations at 49 CFR part 38, *Transportation for Individuals with Disabilities, Subpart B—Buses, Vans and Systems*, and by incorporating and requiring compliance with the September 6, 1991 guidelines issued by the ATBCB. (56 FR 45584) This document collectively refers to the ATBCB's final accessibility guidelines and DOT's final rule as the ''ADAAG''.

Issuing motor vehicle safety standards provides the best way to ensure that only lift systems that comply with objective safety requirements are placed in service. The standards adopted today will ensure a level of safety and uniformity that should instill confidence in the user population.

Additionally, our regulatory framework provides specific procedures to address quickly vehicles and motor vehicle equipment that are out of compliance or contain a safety defect, including a procedure that can be followed to remedy the situation if a problem is found.

We believe the standards will be of benefit to lift manufacturers, vehicle manufacturers, alterers, and modifiers, as well as consumers. The platform lift standard was drafted to include or exceed all existing government (Federal Transit Administration (FTA), ADA, Department of Veteran's Affairs (DVA), California Title 13) and voluntary industry (*e.g.*, Society of Automotive Engineers (SAE)) standards.[7] A chart detailing which voluntary and Federal standards correspond to each of the requirements proposed in this document can be found at the end of the document in Appendix A. A lift manufacturer who certifies its lift to the standard should have confidence that the lift would also meet other major U.S. standards currently in force without additional testing.

We published a notice of proposed rulemaking (NPRM) on February 26, 1993 proposing to create a new safety standard for buses equipped with lift systems (58 FR 11562). On July 27, 2000, we published a supplemental notice of proposed rulemaking (SNPRM) (65 FR 46228), in part because the comments on the 1993 NPRM were over six years old. That notice provided for a 60-day comment period.

II. Summary of the SNPRM

The SNPRM differed from our original proposal in several respects. Most notably, the scope of our proposal was expanded to platform lifts installed on all motor vehicles rather than just buses. Second, we decided to propose two standards, instead of one, and to assign each of them a different Federal motor vehicle safety standard number: Standard No. 141, instead of Standard No. 401, and Standard No. 142 (these designations have been changed to FMVSS No. 403 and FMVSS No. 404, respectively). We believed that two standards, one addressing the platform lift and another addressing the vehicle on which the lift is installed, would best protect lift occupants and bystanders. This two-prong approach is the same one we took in regulating underride guards.

Other significant changes from the NPRM were the proposal of additional interlock requirements, improved wheelchair retention and platform slip resistance tests, and, in some instances, lesser compliance standards for lifts installed on vehicles typically used solely for private transport.

The proposed equipment standard, first introduced in the SNPRM, tentatively required platform lift manufacturers to ensure that their lifts meet minimum platform dimensions and maximum size limits on platform protrusions and gaps between the platform and either the vehicle floor or the ground. The proposed standard also contemplated requiring handrails, a threshold warning signal, and retaining barriers for lifts. Performance tests were specified for wheelchair retention on the platform, lift strength, and platform slip resistance. A set of interlocks was proposed to prevent accidental movement of a lift and the vehicle on which the lift is installed.

The proposed vehicle standard contemplated requiring vehicle manufacturers who install lifts to use lifts meeting the equipment standard, to install them in accordance with the lift manufacturer's instructions, and to ensure that specific information is made available to lift users.

Since the purpose of the two standards is to prevent injuries and fatalities during lift operation and to promote the uniformity of Federal standards and guidelines for platform lifts, we drafted the SNPRM both with the intent of protecting lift users aided by canes or walkers as well as lift users seated in wheelchairs, scooters, and other mobility devices.

We stated the costs associated with the proposed rule should be relatively low because we believed that most lift manufacturers are already complying with the existing voluntary and Federal standards. Accordingly, we believed lift manufacturers generally would not need to make substantial changes to their existing lifts, although some work may be needed to fully comply with the lift standard.

[4] 42 U.S.C. 12204.

[5] 42 U.S.C. 12186.

[6] Throughout this document, we refer to lifts covered by the new standards as ''platform lifts.'' The standards do not apply to ramps or devices where the disabled individual is transferred to a built-in mobility device. The lifts must meet the needs of wheelchair users and other individuals who are unable, due to a disability, to negotiate a vehicle's steps, *e.g.*, individuals who use canes or walkers rather than a wheelchair. We have designed the standards with the needs of all mobility-impaired occupants in mind.

[7] The one area where the requirements for private use lifts do not meet or exceed voluntary industry standards is the specified minimum load. The SAE recommended practice provides for a standard load of 600 lb. As discussed later in this document, we are only requiring a specified minimum load of 400 lb for lifts certified to the personal use requirements.

III. Summary of the Final Rule and Key Differences Between It and the SNPRM

A. Manufacturer Responsibilities Under the Final Rule

1. Platform Lift Manufacturers

As in the SNPRM, the responsibility for lift design and performance ultimately rests with the lift manufacturer. The lift manufacturer must not only provide a lift that complies with all of the performance requirements set forth in today's rule, but also installation instructions that provide sufficient direction to the lift installer so that the lift, when properly installed, fully complies with all the applicable requirements of FMVSS No. 403. Additionally, the lift manufacturer must determine, at the time of certification, whether the lift is appropriate for use by the general public rather than by a single individual.

2. Vehicle Manufacturers

Vehicle manufacturers also bear responsibility under today's rule. While they are not responsible for the design of a particular lift, they are responsible for installing a lift in a manner consistent with both FMVSS No. 404 and the lift manufacturer's installation instructions. Additionally, they are responsible for making sure that only public use lifts are installed on buses, school buses, and multi-purpose vehicles (MPVs), other than motor homes, with a GVWR greater than or equal to 4,536 kg (10,000 lb). Finally, they are responsible for assuring that the lift, as installed, meets all the operational requirements that are vehicle dependent. That is to say, the installed lift must operate as mandated by today's rule.

B. Platform Lift Requirements

Although we have adopted large portions of the regulation as set forth in the SNPRM, we have made numerous changes in today's final rule. First, we have decided not to adopt three of the ten interlocks proposed in the SNPRM. In addition, we have changed the weight-based distinction for determining whether an MPV must meet the more stringent requirements based on anticipated use by members of the general public and those requirements for lifts likely to only be used by a single individual. The determination of when a lift must meet the public use requirements has been increased to a vehicle GVWR of 4,536 kg (10,000 lb). We have also extended the rule's effective date from one year to two years. Finally, we have specified weight limits necessary to activate the interlocks and alerts required by today's rule. We have also changed the standard load for private use lifts from 272 kg (600 lb) to the manufacturer's specified load or 181 kg (400 lb), whichever is greater.

IV. Summary of Public Comments

We received 25 comments in response to the SNPRM. Four industry associations submitted comments on behalf of their members. The National Mobility Equipment Dealers Association (NMEDA) represents businesses that modify vehicles for persons with disabilities. The American Bus Association (ABA) represents bus operators, manufacturers, and suppliers of products and services used by the bus industry. The United Motorcoach Association (UMA) represents motorcoach operators and suppliers. The American Public Transportation Association (APTA) represents transit systems, product and service providers, and state associations and departments of transportation. According to APTA, its members serve over 90 percent of all people who use public transportation in the United States and Canada.

The five lift manufacturers who commented, Stewart & Stevenson, Braun Corp, Ricon Corp., Lift-U, and Transport & Trolley, represent both the personal use market and the paratransit market. Seven companies representative of vehicle manufacturers also commented on the SNPRM. Blue Bird and Collins Industries (Collins) manufacture school buses. American Transport Corp. (ATC) and Motor Coach Industries (MCI) manufacture paratransit, or over-the-road buses. Prevost and VanHool are also bus manufactures, but did not specify in their comments what types of buses they manufacture. Ride-Away Corp. alters and modifies personal vehicles for persons with disabilities.

Four state agencies, the Wisconsin Department of Transportation (Wisconsin DOT), the Oregon Department of Transportation (Oregon DOT), the Michigan Department of Transportation (Michigan DOT), and the New Jersey Transit Authority (NJ Transit), offered comment, as did two private citizens and one paratransit bus operator (DMN Enterprises). Finally, we received limited comments from R.C.A. Rubber, a rubber tread manufacturer, and Bendix Commercial Vehicle Systems, a manufacturer of air brake systems and components.

In general, the comments on most portions of the proposed standards set forth in the SNPRM were supportive. However, some commenters expressed significant, overarching concerns about the possible impact of two new safety standards in this area. Specifically, several lift manufacturers raised concerns over the cost of meeting the new requirements and whether the agency had demonstrated a safety need sufficient to justify the proposed standards. Further, several over-the-road bus manufacturers and operators raised concerns about whether a new standard would delay full implementation of the ADA.

The state governments that commented were largely supportive of the proposal made in the SNPRM. For example, the Wisconsin DOT stated that all lifts owned or operated by state or local governments within the state already met or exceeded the proposed requirements.

V. Need for Safety Standards for Platform Lift Systems

As discussed in the SNPRM, we recognize that the vast majority of the American public does not need to use platform lifts. We believe, however, that individuals who do need to use them should have assurance that lifts are as safe as possible and should be protected from the risk associated with using unregulated equipment.

We acknowledge that there is a dearth of information regarding injuries associated with malfunctioning lifts. We believe that, from 1991 to 1995, at least 299,734 wheelchair users were injured. That figure, based on data collected by the Consumer Product Safety Commission during that time-frame as part of its National Electronic Injury Surveillance System (NEISS) database, is for all types of circumstances. 7,121 of these users were injured as a result of some interaction with a motor vehicle. In 1990, the Centers for Disease Control determined that 1.411 million people in the United States use wheelchairs. Thus, the NEISS figure of 299,734 represents an overall injury rate among the wheelchair-using population of slightly more than 21 percent. While only 7,121 of these people were injured during the five-year period as a result of interaction with a motor vehicle, 26% (1,366) were the direct result of some unspecified type of lift malfunction. When broken down on an annual basis, the NEISS data projects 248 injuries per year.

We anticipate that more people will use lifts on motor vehicles as the ADA requirements make transportation more accessible to individuals with mobility impairments and as the proportion of older people in the general population increases. As the number of lift-equipped vehicles increases, the number of lift-related injuries is also

likely to go up. Indeed, our analysis has already revealed an upward trend in the number of lift-related injuries.

We believe there may be considerably more injuries due to malfunctioning lifts than the numbers suggest. Any analysis of deaths or injuries based on motor vehicle-incidents will necessarily under-represent the scope of the problem. Since lift-related injuries frequently are not reported as a motor vehicle incident, no police report is filed. Consequently, the event is not entered in the data bases that we search for injury and death information related to motor vehicles (*e.g.*, police reported incidents from states, NASS, and FARS). Additionally, the injury count understates the number of actual injuries because it does not include incidents in which the injured persons were treated at small hospitals, emergency care centers, or doctor's offices.

Recognizing the dearth of available data, we asked commenters to respond to several questions that we posed in the SNPRM. Specifically, we sought comment on the size of the potential lift using population; the number of lifts installed on motor vehicles since 1997, with a breakdown of that number between lifts that were installed by lift manufacturers and lifts that were installed by someone else; the number of MPVs with ramps instead of lifts; and how many lifts were installed on vehicles prior to their first sale for purposes other than resale, with breakdown by entity that installed them. We also sought comment on which of the proposed requirements would most contribute to a reduction of injury and why.

Collins noted that approximately 30% of the buses it builds are equipped with platform lifts. It further noted that while in 1997 approximately 15% of the buses it manufactured were equipped with a lift-accessible service door but were not equipped with a lift, that number has shrunk to about 3%. Collins posited that the new regulation would eliminate that portion of the market. ATC stated that since 1997 it has installed approximately 858 lifts in their own vehicles and had produced approximately 171 buses with lift accessible doors but without a lift.

Ricon estimated that someone other than the vehicle manufacturer installs approximately 40% of lifts. It noted that the percentage of lifts installed by lift manufacturers is negligible. NJ Transit stated that since 1997 all of its transit buses, cruisers, minibuses and vans have had lifts installed by the vehicle manufacturer.

NMEDA noted that local dealers, who may be alterers or modifiers, install the vast majority of personal use lifts. It stated that local dealers are also responsible for installing a smaller majority of commercial lifts.

The ABA and UMA stated that NHTSA had not demonstrated a sufficient safety need for the adoption of new FMVSSs. UMA stated that it had contacted its user and insurance members and had not identified a single instance of a disabled traveler being injured or killed because of a lift design problem. It maintained that the injuries of which it is aware have all been a result of poor maintenance or training practices. ABA stated that it believed the dearth of injury data after the passage of the ADAAG indicates that lifts perform well under the current set of lift requirements and that no further regulation is needed.

The ABA and UMA and MCI also maintained that the proposed standards, if adopted, would delay the implementation of ADA requirements on over-the-road buses as bus operators will delay purchasing lift-equipped buses until bus and lift manufacturers have retooled their designs so as to comply with the new standards. Stewart & Stevenson noted that the lift industry has already expended significant development costs in meeting the ADAAG and California Title 13 requirements. It stated that the proposed requirements would impose additional costs on the lift manufacturer, vehicle manufacturer, and consumer.

Mirroring the argument by UMA that operator error was a larger problem than lift malfunction, DMN Enterprises and MCI argued that the proposed standards do not adequately consider the presence of a trained lift operator on transit vehicles. DMN Enterprises also believed that the costs might be minimal for several of the proposed requirements, but that the additional costs in several areas such as platform deflection, interlocks, and angular orientation during free fall would require major redesign and potentially high costs. It also asked why NHTSA did not consider adopting the California Title 13 test requirements rather than devising new requirements. Finally, it urged NHTSA to commit to developing standards addressing ramps and securement devices since the transit industry is moving towards greater use of ramps and less on platform lifts.

We acknowledge the dearth of data typically relied on by NHTSA in determining whether a particular safety standard meets the need for motor vehicle safety. However, as discussed above, we do not believe that the lack of concrete data necessarily means that there is no need to regulate the safety of platform lifts. Our determination that today's standards meet the requisite need for safety is based primarily on engineering assessments made by the SAE, FTA, and DVA, and verified by NHTSA, that certain safety features are needed for platform lifts. Today's rule merely establishes measurable performance standards that incorporate the existing recommended practices and guidelines.

VI. Differing Safety Needs for Private and Public Use Platform Lifts

In the SNPRM, we discussed whether it would be appropriate to have fewer requirements for platform lifts installed on MPVs than for those installed on buses. The reason for that difference is that lifts designed for MPVs have different usage patterns than those designed for buses. We proposed that buses and MPVs greater than 3,200 kg (7,100 lbs) meet stricter requirements than other vehicles. At that time, we believed that this was an appropriate cut-off, given that most of these larger vehicles are for public transit and paratransit use, instead of individual use. Since the lifts on these vehicles will generally be subjected to more stress and cyclic load and will be used by a larger and more varied population, more requirements as to platform size, controls, handrails and lighting appeared appropriate. We noted that where the ADA imposes requirements on commercial entities and those entities use a vehicle that weighs less than 3,200 kg, the commercial entity would still have to meet the applicable ADA requirement. We then requested comment on whether it is appropriate to have less stringent requirements for lifts designed for installation on motor homes, trucks, truck tractors, trailers, and MPVs less than 3,200 kg. We also sought comment on whether 3,200 kg was the correct breakpoint, and if not, what was.

Several commenters, including individuals, lift manufacturers, modifiers and vehicle manufacturers stated that the breakdown of lift requirements based on GVWR was unworkable since many individuals purchase vehicles that have a GVWR greater than 3,200 kg to accommodate the needed vehicle modifications or to provide additional cargo capacity. The majority of commenters argued that the division should be based on whether the lift would be used in a commercial setting or solely for personal use. NMEDA suggested the lift manufacturers be required to mark their lifts as suitable for personal or

commercial use. Collins and Ride-away suggested the GVWR break-point be raised above 3,200 kg, with Collins suggesting a division at 4,536 kg (10,000 lb) GVWR.

Additionally, a private citizen and MCI argued that the requirements for private-use lifts should be no less stringent than those used for transporting the general public. MCI noted that operators of public-use lifts are trained in the proper operation of the equipment and, as demonstrated by NHTSA's own data analysis, that fewer injuries occur on lifts installed in buses than on lifts installed in MPVs. Braun supported adopting less stringent requirements for personal-use lifts.

As discussed in the SNPRM, defining a safety standard solely in terms of whether the vehicle or motor vehicle equipment is intended for private or public use fails to meet the statutory meaning of objectivity unless the agency clearly defines private and public use in a manner that is readily applicable to lift manufacturers and vehicle manufacturers. We are, however, persuaded that a break-point of 3,200 kg for MPVs will likely place unreasonable restrictions on many individuals who use their vehicle for purely personal transportation. Accordingly, we have raised the upper limit for MPVs that may use lifts that are not certified to all of the standard's requirements to 4,536 kg GVWR. Not only is this one of the break-points NHTSA has traditionally used to differentiate between private and commercial vehicles, but we also believe this break-point will accommodate almost all MPVs purchased for personal use.

As proposed in the SNPRM, the lesser requirements will also be applicable to those lifts designed for use on motor homes, trailers and tractor-trucks, since these vehicles are generally not used to transport the general public. The lifts that meet the lesser requirements shall be certified as DOT-private use compliant. Private use is defined in the standard as those lifts designed for installation on motor homes, trailers, truck tractors and MPVs with a GVWR less than 4,536 kg, and that are certified as compliant with the lesser requirements. The certification label on these lifts shall bear the statement ''DOT-private use lift''.

We note that the requirements of the ADA still apply to all lifts installed on vehicles used as public conveyances, either by public entities or by private entities that transport members of the general public, regardless of vehicle size. Thus, in many instances a lift manufacturer may choose to manufacture a lift that meets the stricter requirements, either because it does not wish to develop a separate lift design, or because the lift will be installed on a smaller MPV that is used for the transportation of the general public. Under today's rule, lifts designed for use on vehicles smaller than 4,536 kg be certified to the stricter requirements. Lifts designed for installation on all buses and on MPVs with a GVWR in excess of 4,536 kg must be certified to the stricter requirements and will be defined in the standard as public-use lifts. Likewise, those lifts that are certified as meeting the stricter requirements are defined as public-use lifts, even if they may be installed on vehicles that are not buses or MPVs with a GVWR less than 4,536 kg. The certification label on these lifts shall bear the statement ''DOT-public use lift''.

Throughout the rest of this document, the differences in requirements, both in the final rule and as discussed in the SNPRM, will be discussed in terms of private use lifts and public use lifts.

VII. Effective Dates

We received ten comments on the proposed one-year effective date. Three of the commenters (Braun, MCI and Collins) believed a one-year effective date was sufficient, although Braun indicated that many of the proposed requirements—particularly the proposed interlocks—would require costly and complex product redesign which would require additional leadtime. Other commenters maintained that too many changes were required to be achieved in one year. These commenters suggested an effective date ranging from two to five years. The commenters were particularly concerned about the time needed to comply with the proposed interlock requirements.

NMEDA commented that the requirements should only apply to lifts manufactured after the effective date and installed on new vehicles. In a similar vein, APTA was concerned that the proposed regulations did not address lifts installed on vehicles that had been purchased before the effective date.

NJ Transit believed the effective date should exempt existing bus orders placed by mass transit authorities as such orders can carry over multiple years. It argued that changing lift equipment in the middle of a bus order could be confusing to customer, and could increase manufacturing and maintenance costs.

Based on the comments, we have decided to adopt a two-year effective date. We believe this time frame will provide lift manufacturers sufficient time to meet any new requirements. As discussed in the SNPRM, most of the requirements adopted in today's rule are already part of an existing standard or guideline. Accordingly, lift manufacturers should not need a significant amount of time to ensure their lifts comply with the new FMVSS. As to NMEDA's and APTA's concern that the new standards not apply to lifts or vehicles manufactured before the effective date, we note that both FMVSS No. 403 and FMVSS No. 404 have a two-year effective date. Thus, only lifts manufactured after the effective date need to be certified as compliant with FMVSS No. 403 and only vehicles manufactured after the effective date need to be certified as compliant with FMVSS No. 404. FMVSS No. 404 will not apply to vehicles manufactured before the effective date even though those vehicles may have FMVSS No. 403 compliant lifts. However the use of a compliant lift, even on the older vehicles, should provide an added measure of safety.

We are unable to provide a separate effective date for vehicles that are covered by multi-year purchase orders, as NJ Transit urges. Such a provision would be non-objective and impossible for us to enforce. However, we believe the two-year delay in the effective date will provide transit operators, such as NJ Transit, to make whatever contract modifications are necessary on existing purchase orders and to ensure that all future purchase orders specify the installation of compliant lifts.

VIII. Platform Lift Requirements

Threshold Warning Signal

In the SNPRM we proposed to require a threshold warning alarm to alert vehicle occupants near an operating lift. For private use lifts, the alarm could be either audible or visual. Under the proposal, public use lifts would need to have both a visual and an audible alarm since these larger vehicles are generally used for commercial transport. In all vehicles, the alarm would have needed to warn lift users if the lift platform were more than one inch below the vehicle's floor reference plane and if any portion of the platform threshold area [8] were occupied by any portion of the lift occupant's body or any piece of equipment. This warning requirement

[8] The platform threshold area is defined in the regulatory text as the rectangular portion of the vehicle floor defined by moving a line, which lies on the edge of the vehicle floor directly adjacent to the lift platform, through a distance of 18 inches (457 mm) in a direction perpendicular to the line including any portion of a bridging device that lies within this area.

was based on an SAE recommended practice specifying a warning if the lift user is within 18 inches of the platform and the platform is more than one inch below the vehicle's floor reference plane.

We stated in the SNPRM that we considered a warning alarm to be particularly important in transit and paratransit vehicles where more than one individual may use the lift sequentially. It would also be important in any personally licensed vehicle in which the lift is fitted such that the user backs onto the lift from the floor of the vehicle (this typically occurs on lifts fitted to the rear of the vehicle), since we did not believe such systems posed the same type of risk to the lift occupant or bystanders. The proposed requirement would not have applied to rotary lifts where loading takes place entirely over the surface of the vehicle's floor. We sought comment on whether an audible or visual threshold warning should be required and whether the warning would avoid injuries to users caused by an out-of-position platform. We also sought comment on whether a minimum size or weight should be specified to trigger the warning (and, if so, what that size or weight should be).

Additional concerns were raised about the effect a visual or audible alarm could have on individuals with certain medical conditions such as epilepsy. Accordingly, Ricon and Braun suggested that NHTSA allow a mechanical threshold barrier as an alternative to an audible or visual alarm. In response to our question as to whether a minimum weight should be specified to trigger the threshold alarm system, Braun and NMEDA argued that the warnings only be required to activate when the sensors detected a weight greater than 50 lb.

The Oregon DOT supported requiring an audible threshold-warning signal. It maintained such a signal would not only protect lift occupants during sequential loading, but would also warn a driver or attendant when a passenger with impaired cognitive ability approached the lift door when the lift was fully deployed.

Other commenters opposed the adoption of a threshold warning alarm, particularly for lifts used in a commercial environment. Prevost posited that a threshold-warning requirement should only be required in those instances where the lift occupant must operate the lift without assistance. Along with MCI, it maintained that the requirement should not apply to lifts installed on over-the-road buses since the drivers of these buses have been trained to load and offload disabled individuals from the bus, obviating the need for an alarm.

Stewart & Stevenson stated that most vehicle manufacturers already have a visual or audible warning that is activated when the lift is activated. It stated that these warning systems are effective, even though they are not activated whenever an individual is within 18 inches of the lift. It further averred that imposing such a requirement would increase the cost of lift design and compliance with no associated benefit. RICON, Braun, NMEDA and Prevost all stated that the proposed threshold area should be reduced to twelve inches, at least for non-commercial, non-transit vehicles. Braun noted that an eighteen-inch threshold area could consume as much as 30 percent of the interior width of a standard-size van.

MCI stated that while SAE J2090, *Design Considerations for Wheelchair Lifts for Entry to or Exit from a Personally Licensed Vehicle,* specified a threshold warning system, it is unaware of any manufacturer of personal use lifts who actually incorporates this feature into its lift design. It additionally claimed that it has never heard of an accident that would have been avoided if the lift had been equipped with a threshold-warning signal. Finally, MCI noted that often the wheelchair securement location is within the 18-inch area proposed in the NPRM and that requiring the alarm to go off whenever that area is occupied and the lift is in motion could draw undue attention to wheelchair occupants.

Section 4.4.6 of the State of California Department of Rehabilitation's Specifications for Adaptive Driving Equipment has required threshold warning systems for lifts installed on private vehicles since 1985. It adopted this requirement after six clients of the state's Mobility Evaluation Program were killed after backing their wheelchair off a vehicle when they thought the platform was in place. Since instituting this requirement, no other falls have come to the attention of the Mobility Equipment Program. Currently Braun provides a platform warning alarm system as optional equipment to at least some of its lifts. We believe that the vehicle modifiers are placing the warning devices in vehicles equipped with lifts manufactured by other companies are meeting the California requirements by installing simple weight detection devices on the floor of the vehicle.

Given the risk involved in backing off a vehicle when the lift is not properly positioned, we have decided to adopt the requirement for a threshold warning system as proposed in the SNPRM. Under today's rule, the threshold warning system must activate whenever the platform is more than 25 mm (1 in) below the vehicle floor reference plane. Several types of detection systems may be used to satisfy this requirement. In order to test for compliance with the requirement we have decided to place one front wheel of the wheelchair test device specified in the standard within the threshold area. This will place approximately 11.3 kg (25 lb) on the threshold. This amount of weight roughly replicates the weight of the lightest portion of an average wheelchair or half the weight of a child who may be using the lift unattended. We have decided against specifying a particular minimum weight because wheelchairs will place slightly differing amounts of weight depending on design. We believe the threshold should reasonably detect the weight of any occupant in a mobility device and any bystander who is likely to be unattended. We note that the rough approximation of weight represented by placing one wheel of a mobility device in the threshold area should allow individuals to place light objects, such as books or handbags, within the area without triggering the alert.

We are unconvinced that there is no need to require a threshold warning alert for over-the-road buses. Prevost and MCI may be correct that in general the lift operators on over-the-road buses have received specialized training in how to use the lift. However, we have no control over the level of training provided. Additionally, the lift operator may actually operate the lift from a position remote from the lift platform, such as the driver's seat. In such an instance, the operator would not be able to ensure that no other vehicle occupants were a safe distance from the lift throughout the range of lift operations.

We believe the 18-inch threshold area requirement is important for safety, particularly for wheelchair users who back onto the lift platform from the vehicle floor. If the threshold is reduced to twelve inches, as suggested by commenters, the wheelchair may be so close to the edge of the vehicle floor that the occupant will be unable to react in time to prevent the wheelchair from continuing the wheelchair's movement off the edge of the vehicle floor. The standard only requires the alert be activated when the lift is deployed, the threshold is occupied, and the lift platform is more than one inch below the level of the vehicle floor. In private vehicles the alert would only be activated when the lift is deployed and

a vehicle occupant is either in the threshold area or simultaneously on the threshold and the platform after the lift had started moving. The same is true for transit and paratransit buses, except the alert could also activate while the lift was being used properly and another occupant was in the threshold area. While the commenters may be correct that the alert will notify all vehicle occupants that the lift is being operated, we do not believe the alert is any more likely to draw attention to a lift user than the operation of the lift itself.

Today's requirement specifies that the audible alert be at least 85 dBA and the visual alert have a frequency of 1 to 2 Hz. We believe these specifications are unlikely to lead to seizures in or cause other medical or physical impairments to vehicle or lift occupants. The 85-dBA level of the audible alarm is a frequently used level for enunciators. An individual can be exposed to this sound level for the length of time the alarm will operate without sustaining hearing loss or other negative repercussions. The low frequency flash of the visual alert (1 to 2 Hz) is in line with the frequency of warning flashers commonly used in automotive and highway applications. The flash frequency is also in line with our existing requirements in FMVSS No. 108, Lamps, reflective devices, and associated equipment, which incorporates by reference SAE recommended practice J590B, Turn Signal Flashers, for the visual flash rate of hazard warnings. SAE J590B stipulates a rate of 60 to 120 flashes per minute, which translates to a frequency of 1 to 2 Hz. We are unaware of any seizures related to the use of hazard devices required under FMVSS No. 108.

We believe lift systems that use a mechanical barrier to prevent a vehicle occupant from falling off the edge of the vehicle are used only rarely, if at all. Certainly such devices are not addressed by existing recommended practices or guidelines. In any case, we have decided against allowing such a barrier as an alternative to the threshold warning alert, as we have some concerns about the safety of such a device. Such a barrier could retain powered wheelchairs, but they would also create a tripping hazard for persons using canes and walkers. Additionally, mechanical barriers could impinge on an occupant's ability to exit the vehicle during an emergency situation. If warning systems other than those related to a threshold warning alert are developed, NHTSA could change the standard to allow such systems.

B. Platform Lift Operational Requirements

1. Maximum Platform Velocity

We proposed maximum platform operating speeds for the safety of lift users, especially standees (*e.g.*, individuals who use a cane or walker). The SNPRM specified a maximum vertical and horizontal velocity of the platform of 152 mm/s (6 in/s) in order to assure the safety of those on or near the lift and to be consistent with the ADAAG (49 CFR 38.23(b)(10)) and FTA guidelines (section 2.5.11), which also allow a maximum velocity of 152mm/s (6 in/s).

Based on our review of the ADA standard, we also decided to propose that during stowing and deploying, the lift platform would have a maximum vertical and horizontal velocity of 305 mm/s (12 in/s). The purpose of this requirement was to reduce the potential injuries to bystanders and lift users. We requested comment on safety need for velocity limits while platform is stowing and deploying and whether any commenters knew of any instances where someone was injured because the lift was stowing or deploying too quickly.

We received comments both supporting and opposing the adoption of a maximum operating velocity during the stowage and deployment portion of lift operation. Collins noted that while it no longer manufacturers platform lifts, it knew of very few accidents that resulted from excessive folding speed when it was manufacturing lifts. Braun also knew of no incidents related to excessive stowage or deployment speed. It stated, however, that 305 mm/sec (12 in/sec) appeared a reasonable speed to prevent injuries. Braun also requested the agency specify where on the lift to measure a maximum radial velocity during the stowage and deployment operations, suggesting a point 610 mm (24 in) from the platform pivot.

We have decided to adopt a requirement limiting the maximum velocity of platform lifts throughout the lift's range of operation. We are not persuaded that specifying a maximum platform velocity, both throughout the range of passenger operations and the stowage and deployment operations, imposes an unreasonable burden on the lift manufacturer. Today's requirement is based on existing requirements, which may explain why commenters are unaware of any accidents related to excessive platform velocity. However, the fundamental risk of injury from a lift that is moving too quickly remains unless there is a requirement that limits the lift's operating velocity.

We agree that it is appropriate to specify where on the lift the agency will measure maximum velocity during the range of operation. The regulatory text has been changed accordingly. Additionally, we recognize that some lifts use a hinged platform lift that pivots down when deployed and up when stowed. On these lifts the highest platform velocity occurs at the outer edge of the platform. In order to clarify that the maximum velocity of these lifts are covered by the standard, we have changed the regulatory text to specify that during the stowage and deployment portions of lift operation no portion of the lift shall exceed 305 mm (12 in/sec). Otherwise the requirements for maximum operating velocity have been adopted as proposed in the SNPRM.

2. Maximum Platform Acceleration

We decided to propose in the SNPRM an acceleration limit of 0.3 g with the platform both loaded and unloaded. The acceleration would be measured along axes horizontal and perpendicular to the lift platform. The no load condition was intended to ensure that even very light occupants would be protected against a sudden increase in lift speed, since very small children may use lifts, especially in school buses. By requiring compliance at any load in between the extremes, we intended to ensure that acceleration remains within the desired limits. While the proposed test procedure was based on the one specified in SAE recommended practice J211, Instrumentation for Impact Test, we proposed to depart from that test procedure by measuring acceleration with a CFC 3 filter rather than a CFC 60 filter. We believed the CFC 3 filter better represents a wheelchair's dampening characteristic. Since no one objected to this portion of the proposal, we have adopted it as proposed.

3. Maximum Noise Level of Public Use Lifts

We proposed a maximum permissible noise level of 80 dBA in the SNPRM. This level represents the maximum permissible volume of ambient noise allowing for normal communication between two people who are three feet away from each other and exceeds the level of ambient noise at a city bus stop.[9] We sought comment on whether commenters knew of any injuries directly attributable to lift occupant and lift operator being unable to communicate.

[9] *See* An Evaluation of the Proposed Wheelchair Lift Safety Test Procedure, (June, 1996) located at docket No. NHTSA–98–4511–4.

Braun, NMEDA, and Ricon all requested the agency provide a specific distance for measuring lift noise levels. They indicated that measurement point of ''lift operator's position'' was too vague since the use of a pendant control could allow the lift operator to be several feet away from the lift. Ricon suggested we adopt a measuring point located 55 inches above the platform while the lift is in use. Collins indicated that it knew of no instances in which a lift occupant or bystander was injured because the driver could not hear the passengers. It was, however, aware of instances in which the driver had ignored a passenger during lift operations. The Oregon DOT asked whether NHTSA had taken account of the accumulative effect of additional noise on people with impaired hearing when determining the maximum amount of allowable lift noise. VanHool asked whether the noise level was measured while the vehicle engine was running and whether the maximum noise level was inconsistent with the requirement that the audible alarm produce at least 85 dBA.

We are adopting the requirement as proposed in the SNPRM with slight modification. The purpose of today's requirement is to ensure the lift user and lift operator will be able to communicate. Since lift operators for private use lifts are likely to be the lift user, we believe there is no need to specify a maximum level of noise that the lift may produce. Accordingly, today's requirement only applies to those lifts certified as public-use lifts.

The commenters are correct that the proposed measuring point of the ''lift operator's position'' was insufficiently objective in the SNPRM to measure maximum noise levels. They are also correct that this uncertainty is exacerbated in systems that use a pendant control, since the location of that control varies based on where the lift operator is standing. Accordingly, we have changed the requirement to state that the maximum noise level will be measured for each operator position specified by the lift manufacturer in the installation instructions. Measurements are taken at the vertical centerline of the face of the control panel 30.5 cm (12 in) out from the face of the control panel. If the lift system uses a pendant control, the vertical measurement point will be at the same location discussed above, but with the control panel in its stowed or stored position, since this places the control at the point closest to the noise source. For controls located outside of the vehicle, the horizontal measurement is 157 cm (62 in) above the ground, which is roughly the same distance from the ground as an adult's ears, while the vertical measurement remains 30.5 cm (12 in) from the face of the control panel.[10]

We did not make any adjustments based on the accumulated effect of noise on individuals with impaired hearing since the lift would only be in use for a short period of time. Additionally, we note that the required 85-dBA audible threshold warning alert exceeds the maximum allowable amount of noise for lift operations. This is intentional. As noted earlier, the audible alert will only sound during lift operations if the threshold area is occupied. Thus, it generally would not be constant throughout the range of lift operations. Additionally, the audible alert should be sufficiently greater than the maximum level allowed for normal lift operations to make it distinguishable.

C. Environmental Resistance

In the SNPRM, we tentatively proposed adopting the SAE requirements for externally mounted lifts. Additionally, we proposed all attachment hardware, regardless of location inside or outside the vehicle, meet the hardware requirements of FMVSS No. 209, Seat belt assemblies, which permits compliance either by passing a salt spray test or by electroplating the components. We sought comment on whether the proposed environmental resistance requirements should be incorporated into the standard.

While the majority of those commenting on this issue supported adding an environmental resistance requirement to the standard, Lift-U maintained that the requirement for electroplating with nickel or a nickel copper alloy was too restrictive. Lift-U also suggested that all lifts, regardless of storage location, meet the SAE requirements for environmental resistance.

Given the strong support among most commenters for an environmental resistance requirement, we are adopting the requirement as proposed in the SNPRM. Both the requirement and test procedure for external components are based on the SAE recommended practice. All attachment hardware, regardless of location, must meet the requirement for attachment hardware specified in FMVSS No. 209. That standard provides for two alternative means of compliance: either by passing the salt spray test or by electroplating with a nickel or nickel/copper coating. We are not extending the SAE-based requirement to hardware located within the occupant compartment of the vehicle because that hardware will not be subjected to environmental conditions any more severe than the hardware regulated by FMVSS No. 209.

D. Platform Requirements

1. Unobstructed Platform Operating Volume

In the SNPRM, we proposed a minimum clear platform width of 724 mm (28.5 in) on the upper surface of the platform, a minimum clear width of 762 mm (30 in) at and between the heights of 51 mm to 762 mm (2 to 30 in) above the platform surface, and a minimum clear length of 122 cm (48 in) above the surface of the platform. No part of the lift or vehicle (except for a required barrier on a platform edge) could intrude into the area above the portion of the platform that would be occupied by a large wheelchair at any point during its operation. No minimum volume was specified for private use lifts, although the vehicle owner's manual insert would have had to specify the unobstructed platform operating volume. We sought comment on whether the suggested approach for private use lifts was appropriate.

The majority of the commenters agreed that it was appropriate to allow lift manufacturers to provide an unobstructed operating volume for private use lifts that was different than that proposed for public use lifts as long as the lift manufacturer disclosed what the unobstructed operating volume was. Collins stated that it could not see any justification for allowing a different size for private use lifts since the lift occupants are the same as those occupants using a commercial lift. APTA and the Michigan DOT averred the width of the upper segment of the unobstructed operating volume for commercial lifts should be increased to 813 mm (32 in) to accommodate scooters.

While Collins is correct that there is no difference in the size of occupants who use personal lifts and occupants who use public lifts, we believe there is a significant difference in lift usage. Personal lifts are generally only used by a single occupant. We expect that occupant will purchase a lift that is suitable for his or her needs. An individual with a large wheelchair or scooter will purchase a lift that accommodates a larger mobility device. An individual with a smaller mobility aid will have no need of a larger lift and may be able to increase his or her vehicle choice by purchasing a lift with a smaller size capacity. In either

[10] *See* US/DOT/FAA Human Factors Design Guide, January 1996, NHTSA–02–13917.

instance, the individual using the lift has an input as to which lift to purchase. This is why we believe there is no need to specify a minimum operating volume for personal use lifts as long as the lift manufacturer notifies the lift user of the maximum operating volume.

However, public use lifts are designed to accommodate the needs of several individuals. The transit operator has no way of knowing whether a smaller lift would accommodate the users of the lift. Indeed, it must assume that there will be instances where a larger lift is required to accommodate a particular lift occupant. In these vehicles the question of user choice has been removed. If the transit operators do not purchase sufficiently large lifts, some potential users will be deprived of the opportunity to use the lift.

We recognize the concerns of APTA and the Michigan DOT that the minimum operating volume may be too small to accommodate all mobility devices currently on the market. We too have some concerns that lifts designed to only meet the minimum operating volume may preclude some users from using a public use lift. However, today's requirement is based on existing requirements and the existing design of most lifts. If we were to specify a larger minimum operating volume, we believe a significant number of lifts would have to be redesigned before they could be certified as compliant. We note that nothing in today's rule prevents lift purchasers from procuring lifts with a platform operating volume that is greater than what is required in the standard. We would also expect scooter manufacturers to design their devices in a manner that allows the user to have access to public transportation.

2. Platform Surface Protrusions

For public use lifts, the SNPRM proposed the upper surface of the platform be free from protrusions greater than 6.5 mm (0.25 in) high, and proposed a test procedure for measuring the height of such protrusions. Private use lifts would be allowed to have protrusions up to 13 mm (0.5 in). The proposed limit for private use lifts was less than that required under ADAAG regulations; however, we believed the ADAAG regulations were overly stringent for the private use lifts (which are not subject to ADAAG regulations in any case). For these lifts, we continue to believe that slightly higher protrusions can be allowed for smooth rise without either compromising safety or decreasing the vehicle's accessibility as long as the transition between the platform and the protrusion is gradual.

We received no comments regarding surface protrusions. We continue to believe that allowing protrusions to be between 6.5 mm and 13 mm (0.25–0.5 in) for personal use lifts is consistent with safety for vehicles that will be used by one person with one type of mobility aid. This is also consistent with the transition requirements described in the next section. Accordingly, we are adopting the surface protrusion requirements as proposed in the SNPRM of no more than 6.5 mm on public use lifts and no more than 13 mm on private use lifts.

3. Gaps, Transitions, and Openings

As discussed in the SNPRM, we proposed the openings in the upper surface of the platform be no greater than 19 mm (0.75 in). No vertical surface transition could be more than 6.5 mm (0.25 in) at either the ground or vehicle level and horizontal gaps would be limited to 13 mm (0.5 in). The total allowable rise of any sloped surface (typically ramps or bridging devices) would be limited to 76 mm (3 in). The proposed allowable slope on the portion of the rise between 6.5 mm and 13 mm (0.25 and 0.5 in) above the ground, platform surface, or vehicle surface would be limited to a 1:2 ratio and a 1:8 ratio would be allowed for the portion of the ramp above 13 mm (0.5 in). Gaps between the upper surface of the platform and either the outer barriers or the inner roll stops would be limited to no more than 16 mm (0.625 in) when fully deployed. Gaps would be tested with a 16 x 16 x 102 mm (0.625 x 0.625 x 4.0 in) test block that could not pass through any gaps. Gaps between the lift and edge guards permanently affixed to the ramp could not exceed 13 mm (0.5 in) throughout the range of lift operation. Edge guards that are an integral part of the vehicle could not be more than 6.5 mm (0.25 in) from the platform throughout lift operation.

Lift-U suggested that we limit the restrictions on maximum gap size to the usable platform surface, instead of the entire platform surface, as there may be gaps that are greater than the proposed 19 mm (0.75 in) behind linkages. Since the mobility device or lift passenger does not have access to these portions of the lift, Lift-U argued that there was no need for a maximum size limitation. No other comments were submitted regarding the proposed requirement.

We believe Lift-U's point is well taken. We are only concerned with the area of the platform that coincides with the portion of the platform that may be occupied. Accordingly, we have changed the wording regarding gaps, transitions and openings to indicate that the applicable platform area for this requirement is the area of the platform that coincides with the unobstructed platform operating volume.

4. Platform Deflection

We proposed requiring that the platform angle not deviate from the vehicle floor by more than one degree when the platform is unloaded and by more than three degrees when the platform is loaded. We also proposed platform deflection be tested with a platform load of 272 kg (600 lbs), centrally placed on the lift. The amount of deviation would be measured throughout the lift cycle. This technique is consistent with the one used in the Department of Veterans Administration procurement standard that a specified deflection limit may not be exceeded either before or after loading. The proposed three-degree limit is consistent with both the FTA-sponsored guidelines (sections 2.2.5 and 3.1.3) and the ADAAG (49 CFR 38.23(b)(9)). Testing throughout the lift cycle is also consistent with the FTA requirement that lifts must meet the deflection limit during the entire lift cycle. We requested comment on whether platform deflection should be included in vehicle standard as well as lift standard, limiting the effect of vehicle suspension on lift deflection.

The majority of commenters on this issue indicated that platform deflection relative to the ground is very difficult to measure since the amount of deflection is vehicle-dependent. Collins indicated that heavier lifts will deflect less than those designed for personal use. ATC stated that it had actually measured the level of deflection at ground level on two different buses with the lift loaded with 600 lb of ballast and found the difference in deflection to be minimal. Lift-U noted that some of their lifts are designed to deflect more than one degree to accommodate less-than-ideal road conditions. By design, these lift platforms angle two degrees toward the vehicle centerline when the lift is at the vehicle floor and two degrees away from the vehicle centerline when at ground level.

Lift-U noted that with over 100,000 of these lifts in use, they have an excellent safety record. Accordingly, Lift-U suggested NHTSA adopt a maximum unloaded deflection angle of 1.8 degrees with respect to the vehicle floor with a maximum loaded angle of an additional three degrees with respect to the unloaded position. In both instances, it urged that we not allow a total slope that exceeds a 1:12 ratio. Lift-U maintained that this approach would allow design flexibility and would be

consistent with the ADA requirement for general access to buildings. Prevost noted that the suspension on its vehicles provide a roll angle of one to two degrees when the lift is deployed and loaded.

Because vehicle suspension appears to play only a nominal role in the amount of overall deflection, we have decided to measure platform deflection only as it relates to the vehicle floor. This is what we had proposed in the SNPRM. However, we have made changes to the proposal based on Lift-U's comments. We believe the FTA standard described by Lift-U will adequately protect against excessive deflection. Under the FTA specification, a lift could deflect no more than 4.8 degrees, even when fully loaded. Allowing a maximum deflection of 4.8 degrees, with no more than 1.8 degrees deflection of an unloaded lift (as measured from the vehicle floor reference plane) is consistent with the FTA specification and slightly more stringent than the SAE recommended practice, which specifies a total maximum loaded deflection of 3.6 degrees as compared to its preloaded position. Adopting this slightly more lenient level will obviate the need to make costly changes to existing lift systems.

5. Edge Guards

In the SNPRM we proposed requiring edge guards that were at least 38 mm (1.5 in) high and sought comment on whether any existing passive lifts have edge guards that extend beyond the lowest step riser when the lift is functioning as vehicle steps and whether such a design creates a tripping hazard. We proposed the 38 mm (1.5 in) height because we believed it would be sufficient to deflect the motion of the wheelchair and alert the wheelchair occupant that the wheelchair is at the edge of the platform. Edge guards of this height are required by both the FTA-sponsored guidelines (section 2.2.6.1) and the ADAAG (49 CFR 38.23(b)(5)).

We requested comments on whether any existing lifts have edge guards that extend beyond the lowest step riser when the lift, in a stowed position, converts into vehicle steps, and whether such edge guards create a tripping hazard when the lift is stowed.

Collins stated that it knew of no passive lifts where the edge guard extended below the lowest riser of the steps. Lift-U stated that edge guards on passive lifts should only be required for those portions of the lift that are outside of the vehicle and that any handrails be considered part of the edge guard. It also argued, as did APTA, that the guards should not be required within three inches of the outer edge of the lift. In the same vein, Braun and NMEDA stated that, for personal use lifts, edge guards should not be required on thirty percent of the platform on one side. The basis for both suggestions was that lifts are commonly designed without a continuous edge guard to facilitate the loading and unloading of the lift passenger when space is limited. Braun and NMEDA also alternatively argued for a reduction in minimum height from the proposed 1.5 inches to 0.75 inches.

The edge guard specifications in today's rule have been amended in response to comments. The practice of ending edge guards short of the outer edge of the platform and reducing the length of the edge guards on one side of the platform allows a lift occupant to turn his or her mobility device when space directly in front of the platform is limited. Accordingly, we have decided to require edge guards be present and continuous along the sides of the platform to within 3 inches from the outer platform edge. In many cases this will be less than the 30% reduction common on many lifts. However, we are concerned that allowing up to a 30% reduction in coverage along the side of the platform could compromise wheelchair retention on the lift platform. This is precisely the type of situation we wish to avoid. Some present lift designs offer lifts where a significant portion of the edge guard stows when the lift is at ground level. Other designs feature stowable edge guards that incorporate at least 30% of the entire edge guard. Such systems are permissible under today's rule as long as the edge guard is fully deployed by the time the lift is more than 3 inches above the ground. We believe this will allow those types of lift designs where additional turning space is desirable without compromising the safety of the lift occupant.

Handrails would also be allowed to operate as an edge guard as long as the handrail provides a continuous surface along and adjacent to the side of the platform parallel to the direction of wheelchair movement during loading and unloading. Likewise, as noted in the SNPRM, the interior structure of the stairwell in an over-the-road bus may serve as an edge guard for those lifts. However, we note that the restriction on gaps, transitions and openings discussed above would apply to these surfaces.

We have decided against reducing the minimum height requirement for edge guards on private use lifts. We do not believe a minimum height of one and one-half inches is excessive. Both the FTA and SAE guidelines specify a minimum height of 1.5 inches, and we are unaware of any problems associated with meeting these guidelines. Additionally, commenters failed to provide any rationale as to why a shorter edge guard was needed or how it would adequately protect a lift user.

6. Wheelchair Retention

In the SNPRM, we proposed that lifts be equipped with a wheelchair retention device that can keep a wheelchair upright throughout the range of lift operation and can sustain a direct force of 7,117 N (1,600 lb). We proposed testing the device both dynamically (impact tests) and statically (overload test) since the two tests replicate different conditions. The dynamic impact test was designed to ensure that the wheelchair could not climb a barrier, while the static test measures a restraining device's structural integrity. We proposed running the dynamic impact test by impacting an empty wheelchair into the barrier when the platform is level with the ground. We would run the proposed static test by applying a load against the retention device and then examining it for separation, fracture or breakage. We proposed a separate dynamic test for rotary lifts whereby both barriers are impacted at a point in lift operation between the ground and vehicle floor.

Lift-U and APTA stated that the SNPRM did not clearly indicate whether the wheels of the wheelchair had to remain on the lift platform during the entire test sequence for both tests, or whether they only had to be in contact with the platform at the end of the test. Trolley & Transport suggested that the wheelchair retention device be at least as high as the average armrest, approximately 635–762 mm (25–30 in), in order to prevent a wheelchair occupant from being tipped out of the wheelchair and off the platform. It also recommended that the dynamic test be conducted using the 95th percentile adult male test dummy and 5th percentile adult female test dummy to assure that a wheelchair occupant would not be thrown off the lift even though the wheels of the mobility aid remained on the platform.

Lift-U also indicated that allowing the wheelchair retention test to be performed in one direction when a single loading direction is specified in the owner's manual is contrary to the requirements of the ADA. Braun commented that the compliance tests for the wheelchair retention device should be conducted using the ISO/SAE surrogate wheelchair. NMEDA also advocated that, for personal use lifts, the

outer barrier be required to be fully in position before the lift can be raised or lowered. It stated that this requirement is particularly important for personal use lifts because those systems almost never have a wheelchair securement device to keep the wheelchair on the lift in the absence of an outer barrier. Ricon believed we should mandate the use of an occupant restraint system for the lift as is currently specified in the Canadian Standards Association D–409.

APTA doubted whether any existing lifts, particularly those installed on paratransit vehicles, have retention devices that could withstand the application of 7,117 N (1,600 lbf) without significant redesign. Braun also believes, as does NMEDA, that the static 7,117 N (1,600 lbf) overload test is sufficient for personal use lifts and that no dynamic test is needed. It argues that the dynamic test will require systems, such as belts or taller outboard roll stops, which are cumbersome and generally incompatible with the smaller, personal use lifts.

We have decided to adopt the wheelchair retention device requirement as proposed in the SNPRM. We note that in many instances the retention device will simply be the lift's outer barrier, and, if applicable, the inner roll stop discussed after this section. The test device need not maintain full contact with the lift platform throughout the wheelchair retention dynamic test. It must remain upright at the conclusion of the test.

We have decided against testing the retention device with a 5th percentile adult female test dummy or a 95th percentile adult male test dummy. When developing the wheelchair retention test, we ran the test with the wheelchairs empty and loaded with 102 kg (225 lb) of ballast. The empty wheelchairs were the most likely to climb the barrier. Transport & Trolley is correct that a loaded wheelchair is more likely to tip over the outer barrier; however, we believe the requirement that the wheelchair remain upright at the conclusion of the test should require designs that are unlikely to tip an occupant out of the wheelchair. The only way to guarantee that a wheelchair does not tip over the outer barrier is to require the type of high barrier advocated by Trolley & Transport or to require an occupant restraint system. We are not mandating the use of an occupant restraint system, as specified in the Canadian Standards Association D–409, because we believe such a requirement is unduly design restrictive. Likewise, we have decided against adopting the suggestion that the retention device be as high as a handrail. We are not persuaded that such restrictions on design are warranted. Rather, we believe any device that can meet the applicable static and dynamic tests used to test for compliance will be amply safe. We note that while we are not imposing a requirement that the outer barrier be fully positioned before a lift can be raised or lowered, rather, we are adopting a requirement that the wheelchair retention device must be fully deployed whenever the lift platform is more than 75 mm (3 in) from the ground.

We note that the ADA does not apply to private use lifts. Accordingly, allowing private use lifts without an inner roll stop if the lift manufacturer specifies that rearward loading is required is not inconsistent with the requirements of the ADA.

We have decided against using the ISO surrogate wheelchair because that wheelchair is not powered. Our test procedure requires the technician to maintain power until all wheelchair motion other than the drive wheels has ceased. This requirement is included in the test procedure to determine whether a powered wheelchair is capable of climbing the barrier. Accordingly, it is imperative that we specify a testing device that is power driven.

We do not know why APTA believes none of the lifts currently installed on its' members buses could not meet the 7,117 N (1,600 lbf) static overload test. This test is based on the existing FTA guidelines, which should apply to many of APTA's members. Additionally, no lift manufacturer objected to the force levels proposed in the SNPRM. Absent any evidence that the proposed force level is excessive, we have decided to adopt the static overload test as proposed in the SNPRM.

7. Inner Roll Stop

We proposed in the SNPRM requiring an inner roll stop to prevent a wheelchair from rolling off the platform's inner edge. For arc lifts, *i.e.*, lifts that move in arcing motion from vehicle edge to a distance away from the vehicle edge during operation, this device prevents the lift occupant from falling off the inner edge. For all lifts, it prevents injuries due to pinching and shearing of the occupant's legs or feet between the platform and the vehicle. For elevator lifts, *i.e.*, lifts that move vertically during operation, it is possible for the vehicle wall below the wheelchair lift entry door to perform the function of the inner roll stop. Accordingly, we proposed a two-part requirement for inner roll stops to ensure that the inner roll stop has adequate strength and will be sufficient to prevent pinching of an occupant's feet throughout the range of operations. Tests would be conducted by preventing the wheels of a wheelchair from passing over the inboard edge of the platform when at ground level and by attempting to move the wheelchair toward the roll stop as the lift is operated. We proposed not requiring an inner roll stop on private use lifts as long as the owner's manual specified that rearward loading was required. We requested information whether pinching was possible in rearward-loading lifts.

Braun commented that the compliance tests for the inner roll stop should be conducted using the ISO/SAE surrogate wheelchair. Braun also noted that it was highly unlikely an occupant on a personal lift would be subjected to a pinching risk when using the lift as instructed and in a lift-compatible wheelchair. Lift-U indicated that allowing the inner roll stop test to be performed in one direction when a single loading direction is specified in the owner's manual is contrary to the requirements of the ADA.

We are adopting the inner roll stop requirements as proposed in the SNPRM. We agree with Braun that there is little risk of pinching on a private use lift when that lift is used as directed. However, we believe such a lift would necessitate rearward or sideways loading in order to eliminate the risk of pinching in the absence of an inner roll stop. As noted in the previous section, the ADA does not apply to private use lifts. Accordingly, we do not believe the requirements we have adopted for those lifts are inconsistent with that law. Finally, we have decided against using the ISO surrogate wheelchair for the same reasons provided in our discussion of the wheelchair retention device.

8. Handrails

In the SNPRM, we proposed that handrail displacement be limited to 25 mm (1 in) when a force of 445 N (100 lbs) is applied and to 102 mm (4 in) when a force of 1,112 N (250 lbs) is applied. We believed that it is more appropriate to test at two force levels than at a single force level of 445 N (100 lbs). The purpose of the 445 N (100 lbs) force application is to assure that the handrail is stable and has adequate clearance around it. The 1,112 N (250 lbs) force application's purpose is to assure that the handrail is sufficiently strong to prevent catastrophic failure.

We received only one comment on the proposed handrail requirement. The Oregon DOT objected to a standard that would allow the handrail to bend as that

condition could inhibit the proper operation of the lift. It also noted that if there were extensive movement or rapid distortion of the handrail, even if the handrail did not break, the effect on the lift user could be the same.

The majority of current handrail designs will bend or deflect to some degree. Requiring handrails that do not bend or deflect at all would be costly and would add additional weight to the lift. Handrail deflection is a by-product of the handrail design and material components. We believe the two handrail tests will ensure that both the design and composition of the handrails will be safe without regulating current designs out of existence.

9. Platform Markings on Public Use Lifts

In the SNPRM we tentatively concluded that it is appropriate to require public use lifts be equipped with platform markings so as to provide greater visibility for the edges of the lift, thus reducing the potential for injuries. Throughout the range of operation, all platform edges, the visible edge of the vehicle floor or bridging device, and any designated standing areas would be outlined with markings at least one inch wide and of a color that contrasts with the color of the rest of the platform by 60 percent. These requirements are based on the FTA-sponsored guidelines (section 2.2.9).

We received no comments on this portion of the proposal. Accordingly, we have adopted the requirement for platform markings as proposed. It only applies to public use lifts. As with the other requirements applicable to lifts suitable for public use, a manufacturer of a lift that is appropriate for installation on an MPV under 4,536 kg (10,000 lb) GVWR may certify compliance with this portion of the standard if it intends to market the lifts as appropriate for use by multiple lift users.

10. Platform Lighting on Public Use Lifts

NHTSA also tentatively concluded in the SNPRM that it is appropriate to require public use lifts be equipped with lighting. We were concerned that without such lighting, a lift user could be injured in poor light conditions. We also believed that the lighting from the vehicle's interior would probably be insufficient to illuminate the lift. Under the proposed standard, based on the FTA guidelines, the vehicle would need lighting sufficient to provide at least 54 lumens per square meter (5 lm/ft^2) of luminance on all portions of the lift platform throughout the range of passenger operation. At ground level, all portions of the lift's unloading ramp would be required to have at least one lumen per square foot of luminance. The agency noted that the current industry standard for lifts in personally-licensed vehicles (SAE J2093) does not require lighting. Moreover, users of personally-licensed vehicles are typically familiar with the use of their lifts and in many cases the user is the operator. Accordingly, we did not propose any lighting requirements for private use lifts. We maintained that these individuals could have lighting installed if they believe it is necessary.

Braun and NMEDA, the only parties to comment on this issue, both supported the proposed lighting requirements, although they stated that the lights need not be mounted directly on the lift and may provide better illumination if installed directly on the vehicle.

We have adopted the lighting requirement as proposed in the SNPRM. Today's rule merely requires the platform of public use lifts be illuminated throughout the range of passenger operation. It does not indicate that the light source must be mounted on the lift. Lighting may be mounted to the vehicle if, along with the lift, the lift manufacturer provides all hardware and detailed installation instructions necessary to install the lighting in a manner that complies with the requirements of the standard. Likewise, the lift manufacturer could specify that the lift was compatible with the lighting package of a particular make/model/year vehicle and provide installation instructions for that vehicle. In either case, compliance with the standard rests with the lift manufacturer, although FMVSS No. 404 will place the burden of compliance with the installation instructions on the vehicle manufacturer.

11. Platform Slip Resistance

A slip resistant platform surface is important to reduce the potential for injuries for both wheelchair and non-wheelchair lift users. The FTA-sponsored guidelines (section 2.2.2) and the ADAAG (49 CFR 38.23(b)(6)) specify that the platform surface should be slip resistant. NHTSA proposed in the SNPRM that the lift platform surfaces have a static coefficient of friction of at least 0.65 when tested, while wet, in any direction.

The proposed test procedure for testing slip resistance was based on the ANSI/RESNA WC–13 test procedure.[11] The coefficient of friction would be tested by wetting the platform surface in the manner prescribed in the standard. Testing would occur within 30 seconds of wetting the platform surface with distilled water.

Only one commenter, R.C.A. Rubber Co. commented on the proposed platform slip resistance requirement. It stated that the proposed test procedure would not be repeatable. The commenter also acknowledged that all known methods of testing for the wet coefficient of friction for wet surfaces were also non-repeatable and did not offer a better method of testing slip resistance. Rather, it suggested the proposed test method not be adopted as part of the standard.

We disagree that the method of testing for the coefficient of friction is not repeatable and are adopting the requirement as proposed. ANSI/RESNA Standard WC13–1998 accepts the coefficient of friction test proposed in the SNPRM. Based on testing that NHTSA conducted, we made slight modifications to the ANSI/RESNA test procedure to maximize test repeatablity. We will consider changing the standard in the future if data indicates that a more repeatable test procedure is available.

E. Structural Integrity

1. Fatigue Endurance

We also proposed two, separate requirements to test for fatigue endurance. The first one was the current SAE recommended practice, which requires the lift to operate through 8,800 cycles; one half of the cycles would be conducted with the lift loaded with 272 kg (600 lb) and one half of the cycles would be conducted with the lift empty (including the stow and deploy operations). The second requirement, which would have applied only to lifts built for public use, would require the lift system to be cycled a total of 31,200 times with one half of the cycles conducted with an empty lift (including the stow and deploy operations) and one half the cycles conducted with a lift loaded to 272 kg (600 lb). We sought comment on whether fatigue endurance should be included as a requirement in the standard.

All commenters offering an opinion on the appropriateness of this requirement supported some type of a fatigue endurance requirement other than Collins, which indicated that the proposed requirement seemed to be a design requirement rather than a performance requirement. However, none of the commenters supported the requirements proposed in the SNPRM.

[11] *Evaluation of ANSI/RESNA WC/13 to Determine the Coefficient of Friction of wheelchair Lift Platforms,* (July, 1996), Docket No. NHTSA–4511.

Stewart & Stevenson supported the adoption of the fatigue endurance requirements set forth in California Title 13. Braun and Ricon suggested the tests be conducted using the lift rated load rather than a 272 kg (600 lb) load. Lift-U noted that there appeared to be a discrepancy between the number of cycles discussed in the preamble and the number of cycles required by the proposed regulatory text. Lift-U also averred that the test be conducted on a test jig rather than on a vehicle because the length of the test is heavily dependent on the cool down period of the lift's intermittent duty power pack.

We are adopting a fatigue endurance requirement for public use lifts that requires a total of 15,600 cycles of operation, with 50% of the cycles in the loaded condition and 50% of the cycles of operation in the unloaded conditions, which includes stow/deploy operations conducted at the same time as the unloaded operations. The requirement for private use lifts is 4,400 operations cycles, with 50% of the cycles in the loaded condition and 50% of the cycles in the unloaded position (including the stow/deploy operations). These are one half the number of cycles set forth in the regulatory text of the SNPRM. While we acknowledge that none of the commenters were particularly happy with the requirement as proposed, we also note that there was no general consensus on a better approach. Given the general support of some type of requirement, as well as the need for lifts to remain fully operable over a long period of time, we determined it was better to proceed with the proposed requirement, as modified, than to drop the requirement altogether.

Various existing standards and procurement guidelines use different combinations of cycles and loads, all of which have both strengths and weaknesses. We have adopted the most meaningful aspects from the various guidelines by adopting the number of fatigue cycles required by both the FTA and California Title 13 and the test methodology recommended by SAE. California Title 13 and the FTA requirements are the same and both apply to public use lifts. They require 600 up/down operations with a load of 272 kg (600 lb) and 15,000 up/down operations with a load of 181 kg (400 lb). Additionally, they require another 10,000 stow/deploy operations. The SAE recommended practice, which applies to private use lifts, requires a total of 4,400 up/down cycles, with one-half of the cycles in a loaded conditions and one-half the cycles in an unloaded condition. We believe that the SAE methodology better imitates real world conditions than the FTA/California Title 13 in that it requires the lift be deployed and lowered to the ground level loading position, loaded, raised to the vehicle floor loading position, unloaded and stowed. The FTA/California 13 requirements do not contemplate any lift operations, other than stowage and deployment, of an unoccupied lift.

While we have adopted the same number of cycles for public use lifts as required by the FTA/California 13 standards, we are requiring that all loaded operations be conducted with a 272 kg (600 lb) load. Because we are reducing the number of occupied lift operations by 50%, we believe requiring all such operations at the higher weight level is justified. For private use lifts, the number of loaded and unloaded cycles mimics the SAE recommended practice.

We do not believe the fatigue endurance requirement amounts to a design requirement. Rather, it tests for the performance of the lift over multiple operations. This approach is consistent with the fatigue requirements of other safety standards like FMVSS No. 106, Brake hoses. Since the fatigue endurance requirement is intended to address the endurance of both the lift and its interface with the vehicle, we believe it is critical to conduct the test with the lift attached to the vehicle. As discussed earlier in this document, lift manufacturers may use whatever means they choose to base their certification that the lift complies with the standard. However, we will run our compliance tests with the lift attached to the vehicle. As discussed later in this document, we will conduct the fatigue endurance test on private-use lifts using a test load of either 181 kg (400 lb) or the lift's rated capacity, whichever is greater. Please refer to that discussion in subpart M, Test conditions and procedures.

As to Lift-U's comment that the test be conducted on a test jig rather than the vehicle to address the possibility of overheating, we note that the potential for the intermittent power pack to overheat is not related to whether the test is conducted on a test jig or attached to a vehicle. We require the fatigue endurance test be conducted with the lift attached to a vehicle because this condition more closely replicates real world operating conditions and tests the integrity of the lift/vehicle attachment interface. We note that lift motors are generally not designed to run continuously for long periods of time. If their duty cycle is exceeded, they will heat up and may temporarily shutdown due to overheating. Accordingly, there must be some rest time between cycles. Today's rule establishes a procedure whereby the lift is cycles in blocks of 10 operations cycles with a minimum cool down period between cycles of one minute. The rest period can be longer than one minute; NHTSA will not determine that a lift is noncompliant simply because thermal overloading of the power pack may sometimes require more than a minute cool down period between blocks of cycles.

2. Proof Load

We have also decided to adopt the proof load requirement proposed in the SNPRM. This requirement, which is tested using static load test II is designed to ensure that the lift continues to operate even when subjected to heavy loads. It is also designed to ensure that the lift's components are sufficiently robust for long-term use and occasional overloading. Comments regarding proof load were aimed at the static load test II requirements and are discussed in that section later in this document.

3. Ultimate Load

The requirement that lifts meet an ultimate load is adopted to ensure the overall structural integrity of the lift. It is tested using static load test III where a 1,089 kg (2,400 lb) weight is placed on public-use lifts and at least a 726 kg (1,600 lb) weight is placed on private-use lifts. The lift is then inspected for breakage. We received considerable comments objecting to the adoption of static load test III and the corresponding requirement for an ultimate load. These comments are addressed in the section discussing static load test III.

F. Platform Free Fall Limits

We proposed limiting the free fall velocity of a failing lift system to 305 mm/s (12 in/s) as the result of a single-point failure.Additionally, any single-point failure could not change the platform's angular orientation by more than two degrees in any direction. Under the proposal, both conditions would need to be met when the lift is under its own power.

While Lift-U supported the proposed vertical free fall limit, it suggested the regulation allow a maximum of 4.8 degrees of angular orientation with respect to the vehicle in the event of a single point failure. This comment mirrors its earlier comment regarding the maximum allowable deflection under normal operating conditions.

We are adopting the free fall limits proposed in the SNPRM. As discussed earlier, we have adopted Lift-U's suggestion that maximum platform deflection be allowed up to 4.8 degrees

for a loaded lift and 1.8 degrees for an unloaded lift. Today's limitation on angular rotation while the lift is in free fall limits overall angular rotation to 6.8 degrees since the limitation on deflection is additional to the 2 degree limitation on rotation as a result of free fall.

G. Control Systems

Under the SNPRM, each system would need to have a ''power'' switch, a ''deploy'' or ''unfold'' switch, an ''up'' switch and a ''down'' switch (rocker switches are considered two switches), and a ''stow'' or ''fold'' switch. The letters would need to be at least 2.5 mm (0.01 in) high, and allow for easy viewing. Controls on public use lifts would need to be illuminated whenever the vehicle's headlights are on and located together in an area where the lift operator has an unobstructed view of the lift and its occupants at all times. We proposed that all controls be activated in a sequential fashion so that no two switches could be operated at the same time. Simple instructions on how to operate the lift's back-up system would be provided near the controls and in English. Any single-point failure in the control system could not prevent operation of the vehicle interlocks. We also considered exempting personal-use lifts from the control requirements. We then sought comment on whether there were any industry-accepted icons or pictographs and whether such icons or pictographs would be helpful. We also sought comment on whether requiring control-switch uniformity and/or a power switch would have prevented any inadvertent deployments or other unsafe situations. Finally, we sought comment on whether the costs associated with control switches would be prohibitive.

While Collins believed a main power switch was probably a good idea, it noted that it did not believe such a switch met the need for safety since it knew of no instances in which an injury occurred on a lift that was not in power mode. It noted that perhaps a better alternative to requiring an ''on/off'' switch would be to prevent the lift from operating until the door is open and the lift is ready to use. Braun also suggested that personal use lifts had no need of a power switch since power switches for these lifts have historically been incorporated by the lift installer as part of the vehicle interlock system. Braun noted that on personal use lifts power is generally introduced to the lift when the access door is opened, obviating the need for a power switch.

Braun commented that it was impossible to operate a lift if the power switch could not be activated at the same time as the other control switches since the power must be activated for the lift to work.

Lift-U noted that the proposed requirements for controls reflect the operation of some, but not all, lifts currently in production. It noted that 60% of the 360,000 lifts it has sold since 1982 have simple controls that use the terms ''power'', ''raise'', ''lower'', and ''stow''. In these lifts, the switches may serve multiple operating functions.

Lift-U and Blue Bird both had questions regarding the proposed requirement that the controls on a public use lift be located in a place where a standing lift operator had an unobstructed view of the lift occupant, and the occupant's wheelchair throughout the range of lift operations. Lift-U noted that such a requirement would prohibit designs where a seated operator, such as a bus driver, could operate a lift. Blue Bird queried whether the requirement applied to controls designed to control backup operation of the lift.

No commenters knew of any icons or pictograms that had been adopted by a voluntary standards group or by the lift industry. Lift-U noted that up and down arrows are sometimes used rather than the words ''up'' or ''raise'' and ''down'' or ''lower''. Both Ricon and MCI argued that the one-inch minimum lettering requirement was unreasonable. Braun stated that the requirement for controls would add some cost to the lifts but that the increase would not be burdensome.

The requirement in the SNPRM that all functions must be activated in a momentary fashion presupposes that once the force to the switch is removed the action controlled by the switch will also cease. This likely would not be the case with a power switch since it would be awkward to exert pressure against both the power switch and some other switch to operate the lift.Rather than debating whether a power switch can perform a momentary function within the context of today's rule, we have decided to specifically exclude the power switch from the prohibition against simultaneous performance of more than one switch. However, we have decided to retain the requirement that all lift systems come with a separate power control. Since the controls for a private use lift need not all be located together, the power control could be incorporated into the vehicle in such a way as to activate the power by opening the lift access door.

The one-inch height specification in the preamble of the SNPRM was an error. The correct height specification was provided in the draft regulatory text. That specification was a minimum of 2.5 mm (0.1 in). We believe this minimum height specification is sufficiently large to be legible without being unduly design-restrictive, and we have adopted it in today's rule. Since there are no industry accepted icons or pictographs, we have decided to retain the proposed wording for the control functions.We believe that uniformity in the area of control functions is critical for commercial lifts, where there will likely be more than a single lift operator, and will provide the users of personal lifts with some assurance that they will be able to operate a lift other than their own if the circumstances so require. Accordingly, we have decided against adopting Lift-U's suggestion that arrows be allowed in lieu of specific wording. We also note that Lift-U may need to change some of its lift designs in order to bring its lifts into compliance with the standard.

We have also added a requirement that the manufacturer's rated weightcapacity of a private-use lift be placed at the controls. We have added this requirement so that the lift user will know immediately whether the lift is sturdy enough to accommodate the weight of the lift user and wheelchair.

Finally, we agree that there is no need to require controls on public use lifts be placed in such a manner that the lift operator has to be standing in order to operate the lift. Under today's rule, a public use lift operator may be seated as long as he has an unobstructed view of the lift occupant and any mobility aid while the lift is being operated.

H. Jacking Prevention

We proposed that the lift's control system or design prevent the raising of any portion of the vehicle by the lift system if continued force were exerted in a downward motion after contact with the ground had been made.

The Oregon DOT stated that the standard should prevent jacking and that resistance should be based on the amount of force needed to keep the lift platform in contact with the ground as the person exits the lift platform. All other commenters addressed the proposed requirement in the context of the proposed ''anti-crush'' interlock discussed later in this document.

We have decided to retain the requirement that the lift be designed in a manner that prevents it from continuing to exert a downward force when the platform has made contact with the ground. We believe that such a requirement is important to prevent undue strain on the lift's operating components. As many lifts have a gravity-down design, they will

automatically stop once they impact the ground or another hard surface. We do not believe it is necessary to specify a particular force application. Either the lift stops when it meets the ground or it doesn't. While the SAE recommended practice specifies that a lift with a power-down system cannot exert a force greater than the weight of the lift components, this is simply another way of saying that the lift can't move or lift the vehicle up. We have, however, decided against adopting the related proposed anti-jacking, anti-crush interlock. Our rationale for dropping that proposed requirement is discussed more fully later in this document.

I. Backup Operation

We also proposed in the SNPRM that platform lifts have a manually-operated back-up system that allows for full use of the lift in the event of a power failure. The back-up would allow for disembarkment as well as lift stowage. Under the proposal, operating instructions would need to be located near the control panel and in the vehicle owner's manual.

Lift-U posited that a lift need only be operable in a loaded condition when the lift was being lowered. It noted that in the event of a power failure, the need was to get a disabled occupant out of the vehicle and to stow an empty lift so that it would not create a dangerous condition. Accordingly, it believed there was no reason to require that a loaded lift work in an upward direction during backup operations.

The back-up operation is not intended as a substitute for normal operation of the lift. Accordingly, we agree with Lift-U that there is no need for the lift to be operable in the upward direction when loaded. The wording in the regulatory text has been changed to state that only an unloaded lift need be operable when lifting the platform from the ground.

J. Interlocks

In the SNPRM, we proposed ten, separate interlocks. Since the comments focused on discrete groups of interlocks, they are identified and discussed below. We sought comment on whether we should specify a means of determining when a lift surface is occupied, and if so, how; and whether there are means, other than force or weight detection, already being used or that manufacturers intend to use to determine resistance and occupancy.

Some comments applied generally to most or all of the proposed interlocks. For example, Lift-U requested that we make it clear that an interlock may be a design feature that prevents a particular action. The Michigan DOT, while supportive of the use of interlocks, stated that we should provide an option to allow a person to override all interlock systems in an emergency situation. All of the commenters supported the specification of a specific force necessary to actuate the interlocks designed to detect a lift occupant or bystander. NJ Transit asked that NHTSA take into account the increased resistance necessary for normal operation of the wheelchair retention device as the lift ages. It was concerned that if the resistance were set too low, the interlocks would trigger increasingly easily as the lift ages. Some commenters also suggested we specify those portions of the platform, bridging device, and vehicle floor that are affected by an interlock.

The first proposed interlock would prevent forward and rearward movement of the vehicle when the lift is not stowed. The second interlock would prevent deployment of the lift unless the lift access door is open and some affirmative action has been taken to prevent the vehicle from moving, such as setting the parking brake.

The Wisconsin DOT appeared to believe the interlocks designed to prevent vehicle movement when the lift is in use or lift usage when the vehicle is in motion were required to be tied to the vehicle parking brake. Accordingly, it asked how to prevent the vehicle from being driven once the parking brake was released, even though the lift was not stowed. Bendix, NMEDA, and an individual commenter indicated that it should be allowable to link the interlocks to the service brakes. Bendix noted that actuation of the parking brake has an effect on the wear of the vehicle air brakes. In order to overcome the problem, air brake manufacturers have developed auxiliary service brake interlock systems that allow the service brake to act in a manner similar to a parking brake. This redundant system allows the vehicle driver to leave the driver's seat without setting the parking brake. NMEDA suggested it might be more appropriate to specify the interlock must function by a means ''other than manually applying the vehicles service brakes.'' ATC suggested the regulatory text require that the interlock prevent accidental or malicious release of the interlock. Collins noted that it knew of no instance in which anyone had been injured by a lift that was operated when the access door was closed, although it had manufactured an externally-mounted lift that could be damaged if it were operated before the access door was opened. Finally, Braun and Ricon suggested that the certification responsibility for these interlock requirements be assigned to the vehicle manufacturer instead of the lift manufacturer since the interlocks will be vehicle specific.

These two interlocks are already required for public use lifts underADAAG and are adopted today as part of the final rule. Lift manufacturers need not link the first interlock to the vehicle's parking brake. The SNPRM merely noted that linking the interlock to the parking brake was one means of meeting the proposed requirement. Other designs may be equally effective. Our primary concern is that the interlock not be linked to a service brake that requires the brake pedal be depressed in order to work the brake. The type of system discussed by Bendix, which is based on an auxiliary system that has been built into the service brake, appears to achieve the same goal as engaging the parking brake. Accordingly, the regulatory text has been changed to specify that the transmission be in ''park'' or ''neutral'' and the parking or service brakes be applied in a manner other than by the vehicle operator depressing the service brake pedal.

We have decided against shifting the burden of compliance with the requirement for the first interlock to the vehicle manufacturer. We believe it is appropriate that both the lift manufacturer and the vehicle manufacturer bear compliance responsibility. While it is true that the interlocks adopted today may require vehicle specific interfacing, we continue to believe the ultimate burden of compliance best rests upon the lift manufacturer. Under today's rule, the lift manufacturer must provide information identifying the appropriate vehicle make/model/year for a particular lift design. It must also ensure that the installation hardware is fully compatible with those vehicles and that the installation instructions provide detailed guidance. These instructions should include a series of tests designed to confirm that the lift has been properly installed. The vehicle manufacturer is then required to meet all of the lift manufacturer's conditions before certifying that the vehicle meets the requirements of FMVSS No. 404.

While we take note of ATC's comment that the first interlock should be designed so as to prevent accidental or malicious release, we have decided against adopting such a requirement. Certainly, the interlock should be designed in a manner that prevents, at a minimum, accidental release. However, the standard already requires the interlock to meet certain conditions,

such as placing the vehicle in park or neutral and setting the parking or auxiliary service brake, that minimize the risk of an accidental release. We are not persuaded that the risk of a malicious release is sufficiently high to merit adding another restriction on the interlock design.

We also appreciate Collins' comment that it is unlikely an occupied lift would be operated while the access door was closed. The second interlock is not intended to prevent an occupied lift from operating while the access door is closed. Rather, our concern is that the operation of a non-occupied lift could damage the lift, creating a safety risk to future occupants. It is irrelevant whether the access door is open or closed. Both conditions could lead to lift damage. As Collins has noted that it is aware of instances in which such damage occurred, we believe it is appropriate to adopt the second interlock as proposed, except we have dropped the provision addressing the status of the access door.

The third interlock prevents stowage of the lift platform when occupied. Braun noted that it believed an interlock that detects platform occupancy was a good idea, but it should only need to detect a weight greater than 23 kg (50 lb). It also claimed that the interlock should only be required for commercial lifts since a personal lift user would be unlikely to stow the lift while on it.

We have decided to specify a minimum weight of 23 kg (50 lb), as we believe it is unlikely that an occupant less than that weight is likely to be unattended on a lift. Additionally, we have decided to specify a test device that has both the weight and structure to accommodate various interlock technologies.

We believe this interlock is important for both public and private use lifts. We acknowledge that, in many private use applications, the lift operator will be aware that the stow function has been inadvertently actuated because the operator will be the lift occupant. However, depending on the nature and severity of the occupant's disability, the individual may not be able to react in time to prevent a mishap. It is also possible that someone other than the lift occupant may operate a private use lift. In these instances, the risk of improper stowage is akin to the risk faced by public lift users.

The fourth and fifth interlocks prevent movement of the lift, either up or down, if the lift's inner roll stop is not deployed and if the wheelchair retention device is not deployed. Braun and NMEDA opposed the adoption of the interlock designed to prevent improper stowage of the inner roll stop, noting that it was unaware of any injuries related to such a condition. NMEDA also suggested that the lift be operable in a downward position if the wheelchair retention device fails so that the lift occupant can be unloaded from the vehicle.

We have decided to adopt these two interlocks as proposed in the SNPRM. We note that the fourth interlock is not related to the improper stowage of the inner roll stop, but rather a condition where the inner roll stop is not deployed. On many private use lifts, there may not be an inner roll stop, and no interlock would be required. However, for those lifts that are equipped with an inner roll stop, we believe it is critical that the lift not move up or down unless that inner roll stop is in place. An inner roll stop that is not deployed while the lift is moving creates the same risk of injury as a lift with no inner roll stop. We believe this interlock will prevent injuries resulting from an occupant being crushed or pinched between the lift and the vehicle. We believe NMEDA and Braun's comments were related to the sixth proposed interlock, which prevented stowage of the outer barrier. That interlock is discussed below.

As to NMEDA's suggestion that the lift be operable in a downward position if the fifth interlock is activated, we would expect the lift operator to use the manual back-up operation to unload the lift occupant from either the lift or the vehicle.

A sixth interlock would prevent stowage of the wheelchair retention device unless the platform is within 75 mm (3 in) of the ground. APTA stated that precluding the stowage of the retention device unless the lift were within 75 mm (3 in) of the ground would prevent certain lift designs that stow the lift when they reach the first vehicle step. We recognize that there are over-the-road lift designs in which the front step is less than 75 mm (3 in) from the ground when the lift starts to stow. The proposed interlock could have precluded the use of such a design. However, we have decided not to adopt this interlock because we believe it is redundant of the performance requirement that the outer barrier be fully deployed once the lift is more than three inches from ground level. Accordingly, these types of lift systems may still be used.

The seventh interlock would require the lift to cease movement if it encounters resistance while moving downward. We sought comment on whether we should specify a quantifiable amount of resistance to trigger the proposed interlock.

While two commenters implicitly supported an interlock to prevent jacking and crushing by asking us to specify a quantifiable amount of resistance to trigger the interlock, the majority of commenters opposed a requirement that would prevent jacking and crushing, arguing that such an interlock would be too costly and unreliable since the sensor would have to detect any obstructions under the platform. Stewart & Stevenson noted that in its experience these types of interlocks were extremely unreliable as they were constantly exposed to adverse environmental conditions. The commenters also noted that an anti-jacking device was not needed since the majority of lifts are gravity-down designs that cease movement once they contact a firm surface. Braun claimed that the relatively slow operating velocity of six inches per second was sufficient to allow bystanders to move out of the way of the lift, obviating the need for an interlock designed to prevent crush injuries.

Recognizing the significant design problems associated with such an interlock, we have decided against adopting it as part of the final rule. We are not confident that it would be possible to design an anti-crushing interlock that would be sufficiently robust to operate for any reasonable period of time. Additionally, we believe the performance requirements preventing anti-jacking and maximum operating velocity sufficiently protect against the risk of injury the interlock was intended to address. We note that we do not believe a system designed merely to prevent further downward movement of the lift once it has reached the ground poses the same problems. Such a system could use a simple force sensor that indicates a significant amount of resistance against the platform. It is for this reason that we have retained the requirement that the lifts come equipped with an anti-jacking mechanism as discussed earlier in this document.

The eighth and ninth interlocks would prevent deployment of an occupied outer barrier or inner roll stop when occupied. The last interlock would preclude downward movement of the lift when both the lift platform and the vehicle floor or the lift's bridging device are occupied. We sought comment on whether anyone knew of injuries attributable to improperly stowing inner roll stops.

Stewart & Stevenson noted that an interlock that would prevent the lift from moving down when both the lift

and the bridging device is occupied would require the development of new technologies. Braun commented that no interlocks were needed to detect occupancy on the inner roll stops, the vehicle floor or a bridging device because the activation of the threshold warning alarm would notify both the lift user and operator that loading was not complete. In a similar vein, the Michigan DOT stated that it believed these interlocks could be handled with a LED lighting system. Braun also noted that it knew of no manufacturer that had incorporated an interlock design that detected weight on the lift's outer barrier. While it did not object to the requirement of such an interlock, it did state that the absence of such interlocks pointed to the difficulty of designing a system that can detect the presence of any portion of the wheelchair or lift occupant. Braun also suggested the interlock be limited to public use lifts, as an individual would have a good idea of whether he was completely on or off of a lift that the individual used on a regular basis.

We have decided to adopt the eighth and ninth interlocks as proposed in the SNPRM. These interlocks were developed as a direct result of comments on the NPRM. In the comments on that notice, a commenter representing Contra Costa county in California pointed out that it knew of cases where the wheels of the wheelchair were on the outer barrier while the lift was operated and the lift occupant was pitched off the lift.

We have decided against adopting the tenth proposed interlock, which would have prevented the downward motion of the platform if the bridging device or threshold area and the lift were occupied. We agree that such an interlock could be both complex and costly to implement. Additionally, we agree that the threshold-warning alert largely obviates the need for this interlock.

K. Operations Counter

In the SNPRM, we tentatively proposed requiring an operations counter so that scheduled maintenance could be tied to lift use. We sought comment on the need for an operations counter as part of a standard.

We received comments both supporting a requirement for an operations counter and opposed to such a requirement. Collins equated an operations counter with an odometer, noting that it believed basing maintenance on an operations counter was the only effective way to ensure adequate maintenance. Those opposed to such a requirement, including Stewart & Stevenson, stated that maintenance schedules should be based on the scheduled maintenance for the vehicle to which the lift is attached.

With slight modification, we have adopted the requirement for an operations counter as proposed in the SNPRM. Lift maintenance schedules may be based on vehicle maintenance schedules and/or the number of lift cycles. A lift that is seldom used will require periodic maintenance even though it has relatively few accumulated cycles. In those instances, it may be more appropriate to have the lift maintained at the same time the vehicle is serviced. For other vehicles, more regular maintenance may be required because the lift is subjected to heavier usage patterns. The lift manufacturer will have no way of knowing whether a particular lift is likely to be used rarely or often. Accordingly, we believe it is important that maintenance have some relation to the number of lift cycles. However, we also believe that the lift operator may, at its option, also specify an additional maintenance schedule that is not dependent on the number of lift cycles. The regulatory text governing the information required in the owner's manual insert has been changed to clarify that maintenance schedules must have some relationship to the number of lift cycles indicated by the operations counter.

L. Vehicle Owner's Manual Insert

In the SNPRM we proposed the lift manufacturer would have to provide a vehicle owner's manual insert that specifies the recommended maintenance schedule, lift usage instructions, and, for personal-use lifts, the lift's operating volume and whether rearward loading is required. ATC suggested the requirement specify that all lift materials intended for the ultimate user of the lift be placed together in a pouch that is sent with the lift or attached to the lift in a weatherproof container. We believe that the vehicle owner's manual insert, as well as the installation instructions and any additional documentation would be packaged together and somehow shipped with the lift in a way that the package would not be separated from the lift or damaged. While this could be achieved in that manner suggested by ATC, a lift manufacturer could use another method that works equally well. In any case, we do not believe there is a need to specify exactly how this specification is met.

We have imposed specific requirements for the owner's manual insert so that lift operators know whether the lift is certified as appropriate for public or private use, and so users of private-use lifts are aware of those aspects of lift design that may affect whether a particular individual should use the lift and how. Accordingly, each insert must state whether the lift is for public or private use. Additionally, inserts for private use lifts must give the platform dimensions, the lift's rated weight capacity, and, in the absence of an inner roll stop, the instruction that the lift be loaded in a rearward direction.

M. Installation Instruction Insert

We also proposed in the SNPRM that lift manufacturers include with each set of installation instructions a page specifying a list of vehicle make/models for which the lift was designed, or a list of vehicle characteristics necessary for lift installation consistent with the lift manufacturer's compliance certification (*e.g.*, appropriate vehicle weight, dimensions, structural integrity), and any instructions that must be placed in the vehicle owner's manual, or elsewhere in the vehicle, in order to comply with the requirements of the lift standard once the lift is installed. We requested comment on how common it is not to provide written installation instructions with lifts and whether such a requirement is needed.

The majority of those commenting supported requiring lift manufacturers to provide installation instructions with each lift. Collins noted that all lifts it installed came with installation instructions and that such instructions were necessary. It did not discuss whether every lift came with its own set of instructions or whether instruction manuals, similar to body builder's guides, were available for each lift style. Braun stated that installation instructions are provided with lifts as a matter of course. However, ATC stated that individual lift instructions were unnecessary since the major vehicle manufacturers who regularly install lifts install the lifts in accordance with a protocol that has been approved by the lift manufacturer; additional instructions are only provided when there are changes in the lift equipment or the existing protocol needs to be changed.

We have decided to require installation instructions for each lift. The process of providing instructions with each lift is fundamentally the same as the requirement that incomplete vehicle manufacturers provide subsequent manufacturers with an incomplete vehicle document (IVD). In such cases, each incomplete vehicle must come equipped with an IVD;

however, the incomplete vehicle manufacturers also provide body builder guides that go into considerably more detail than the IVD. Likewise, in this instance we expect lift manufacturer to continue training its installers and to provide ancillary documentation such as a body builder guide that need not accompany every lift. However, installation instructions need to be complete and must identify the vehicle make/model/year appropriate for the particular lift. The instructions must also state, on the cover or first page, whether the lift has been certified for public or private use, and, in the case of those certified for private use, the lift's rated capacity. Lift manufacturers may reference more detailed instructions in the installation instructions if including the highly detailed instructions for each lift is unwieldy. However, those more detailed instructions must be made available to each lift installer using the manufacturer's lift.

N. Test Conditions and Procedures

As discussed in the SNPRM, we believe that tests that may have an effect on the vehicle/lift interface (*i.e.*, inner roll stop, static load test I, fatigue endurance, and static load test II) would likely need to be performed with the lift attached to the vehicle, while other tests could likely be performed on a test jig. We sought comment on the estimated costs of the proposed compliance tests, including the three static load tests. We also sought comment on how lift manufacturers currently test for compliance with the ADAAG requirements and whether the proposed static load tests would be sufficient to allow a manufacturer to verify compliance with the ADAAG requirements.

Several commenters, including Stewart & Stevenson, Provost, and Lift-U stated that the testing costs associated with compliance will be significantly greater than contemplated by NHTSA in the SNPRM and preliminary regulatory evaluation. Braun and Ricon indicated that the additional cost would be nominal. MCI asked if finite element analysis was an acceptable alternative the dynamic tests.

Braun averred that all performance criteria should be based on the lift's rated capacity rather than requiring that all lifts accommodate a 272 kg (600 lb) load (or a multiplier thereof in the case of static load tests II and III). Braun noted that lifts designed for minivans are generally rated at no more than 181 kg (400 lb). Because an individual with a combined wheelchair/body weight in excess of 181 kg (400 lb) is generally required to purchase a larger vehicle to accommodate the user's size.

While lift manufacturers are free to use whatever methods they wish to determine whether the lift complies with FMVSS No. 403, we will conduct all dynamic tests in the manner specified in the regulatory text. For some of the tests, a finite element analysis may sufficiently assure manufacturers that their lifts can meet the test conditions specified in this rule. For other tests, such as static load tests I and II, we believe it is unlikely that such an analysis would provided adequate assurances since those tests are designed to assure that the lift is fully functional. In any case the determination of how much and what type of testing is required to meet the manufacturer's good faith determination of compliance ultimately rests with the manufacturer.

The proposed requirement that all lifts be tested with a 272 kg (600 lb) mass, or multiplier thereof, was based on our belief that many lift users are likely to approach a 272 kg (600 lb) weight. As an example, this mass requirement is approached by two separate potential weight combinations: that of a 99th percentile male, weighing 109 kg (241 lb), with a powered wheelchair, weighing 113 kg (250 lb), for a total weight of 222 kg (491 lb); and that of a 99th percentile male in a manual wheelchair and an attendant (245 kg (540 lb)). While these examples are below the 272 kg (600 lb) limit, in some cases people and wheelchairs will weigh more. Additionally, industry standards and the ADA require a 272 kg (600 lb) lifting capacity. However, we recognize that in many instances the combined wheelchair/occupant weight will be considerably smaller than 272 kg (600 lb). A child in a manual wheelchair, even if attended on the lift by a full-sized adult, would likely weigh less than 135 kg (300 lb). Likewise, a full-size adult with a manual wheelchair and no attendant would easily weight less than the 181 kg (400 lb) to which many personal use lifts are currently rated. We believe these smaller lifts serve an important function in providing individuals with lifts that meet their particular needs both in terms of load-bearing capacity and increased vehicle choice.

Accordingly, we are adopting a definition of a standard load in today's rule. For public-use lifts, the standard load will remain 272 kg (600 lb). We believe this degree of load bearing capacity is critical for lifts that are not custom ordered to meet a particular person's individual needs. However, for private-use lifts, the standard load will be the lift's rated capacity or 181 kg (400 lb), whichever is greater. We are specifying a minimum load bearing capacity because we believe any lift should be able to accommodate 181 kg (400 lb). We are unaware of any lift designs that are not rated to at least 181 kg (400 lb). We are not simply setting the standard load at 181 kg (400 lb) because we are also aware that many personal use lifts are rated at a higher weight and that many individuals require a sturdier lift. Since the standard load is used to mimic weights likely to be placed on a lift during actual operations, or as a basis for determining whether sufficient safety factors have been incorporated into a lift's design, we believe the sturdier lifts should be tested in a manner consistent with their rated capacity.

A detailed discussion of the costs associated with conducting compliance tests is provided later in this document. The other concerns are addressed below in the discussion of each test.

1. Test Devices

In the SNPRM we proposed using a test pallet designed to mimic the size of a standard powered wheelchair. Its base would be 66 mm × 686 mm (26 in × 27 in). For the static load tests, the pallet would be loaded with rectangular steel plates of uniform thickness with dimensions between 533 mm and 686 mm (21 and 27 in). We received no comments objecting to the suitability of the proposed test pallet and have adopted it as proposed in the SNPRM.

We also proposed using a mobility device for testing that approximates the size and weight of popular powered wheelchairs currently on the market. As discussed earlier in the section addressing outer barriers and retention devices, we have decided against adopting the ISO device, as suggested by Braun, because that device is not powered and thus does not place sufficient force against the retaining devices (outer barriers, inner roll stops, or other retention device) to adequately test those systems. Accordingly, we have adopted the device proposed in the SNPRM.

We have also adopted a test device for testing compliance with the restrictions on gaps, transitions, and openings. This test device consists of a solid, rigid box with a height and width of 17 mm (0.67 in) and a depth of 100 mm (4 in). In order to test for platform occupancy for the interlock tests where such occupancy must be detected, we are specifying a rigid test box (150 × 150 × 300 mm (6 × 6 × 12 in)) with a total weight of 23 kg (50 lb).

2. Static Load Test I—Working Load

Proposed static load test I was an operational test in which the lift would be exercised though its full cycle of movement. The lift would be required to function in both the loaded and unloaded conditions. The loaded condition would be met by placing a 272 kg (600 lb) load on the lift. Testing with an empty platform was specified to ensure that the lift operates properly during that portion of the usage cycle when the lift is not occupied.

The only comments we received regarding this test procedure was the comment by Braun and NMEDA that the test should be conducted using ballast equivalent to the lift's rated capacity rather than the specified 272 kg (600 lb). This comment has already been addressed above. Accordingly, we are adopting the procedure largely as proposed. The only changes are that private use lifts will be tested with a 181 kg (400 lb) load or a load equivalent to the lift's rated capacity, whichever is greater, and the requirement that the lift be stopped mid-way through the lift cycle has been removed. The lift will still be stopped once through the lift cycle, but we do not be believe it is necessary to specify where exactly that should occur.

Using the control panel, the test operator will deploy the stowed platform, center the pallet on the lift and center the standard load on the pallet. The lift will then be lowered to the ground level, stopping once during the process. The pallet will be removed from the platform and the lift cycled up, stowed, and cycled back down, stopping once during each up or down cycle. The test pallet will then be reloaded onto the platform that would then be cycled up to the vehicle floor level loading position, stopping once during the cycle. The pallet will be removed and the lift stowed. The power will be turned off and the portions of the test that apply to backup operations will be repeated manually, using the lift's manual backup mode.

3. Static Load Test II—Proof Load

The static load test II requires a test load of three times the standard load appropriate for a lift to be centered on the platform while the lift is at the vehicle floor level loading position. For public use lifts, this load will be 816 kg (1,800 lb). For private use lifts, the load will be at least 544 kg (1,200 lb), but could be more if the lift's rated load is greater than 181 kg (400 lb). This constitutes a change from the test proposed in the SNPRM, which would have required a test load of 816 kg (1,800 lb) for all lifts. As was proposed earlier, the load would remain on the platform for two minutes, after which it will be removed. The lift and vehicle will be inspected for separation, fractures or breakage, and static load test I will be repeated to ensure that all lift components still function.

Braun and NMEDA stated that the test should be tested on a test jig rather than on a vehicle. NMEDA maintained that the test was impractical if conducted with the lift attached to the vehicle since most vehicle floor structures are not developed to withstand the proposed level of concentrated loading. It stated that the current industry practice is to test lift installation to 125% of the lift manufacturer's rated capacity of the lift. Under current industry practice, the installation is acceptable if there is no permanent deformation of the vehicle floor or other mounting structure. Stewart & Stevenson asked whether it would be allowed to certify compliance using a test jig and have the responsibility of adequate lift-to-vehicle interface borne by the vehicle manufacturer.

We continue to believe static load test II should be conducted with the lift installed on the vehicle. After this test the lift must remain fully operational. Thus, the integrity of the connection of the lift to the vehicle cannot be compromised. As discussed earlier, manufacturers may use whatever means they believe is appropriate to ensure compliance with the standard. Accordingly, it is not necessary for this test to be conducted on every possible vehicle make/model/year for which the lift is appropriate as long as the lift manufacturer is confident that the lift will comply on those vehicles based on its own testing and analysis. However, we will conduct this test with the lift installed on a vehicle that the lift manufacturer has identified as appropriate for the lift. As to NMEDA's request that the load be limited to 125% of the lift's rated capacity, we note that such a requirement would be only nominally more stringent that static load test I. Since the point of this test is to assure that the lift remains fully functional even after it has been exposed to a severe condition, we believe that a test load that is three times the lift's rated capacity better ensures that catastrophic failures will not occur in the real world.

4. Static Load Test III—Ultimate Load

The proposed static load test III was designed to ensure that the lift could support the heaviest wheelchair/user combination without the lift collapsing. Under the proposal, the lift would not be required to operate, and we anticipated that the size of the load would cause permanent deformation to the lift/vehicle system. The test, as proposed, requires a test pallet and load with a mass of 1,088 kg (2,400 lb) be placed on the lift platform. This weight was the equivalent of four times the minimum lift capacity proposed in the NPRM. The loaded pallet would have been left on the platform for two minutes and then removed. The lift would then have been inspected for separation, fracture, or breakage. The lift was to be tested on a vehicle or a test jig and was not expected to remain operable after the load had been removed. We sought comment on whether the static load test III added safety benefits above and beyond those achieved in static load test II.

Collins, Braun, NMEDA, and Steward & Stevenson all opposed the adoption of the Static load III test, arguing that it was to onerous. Collins noted that the static load test III was effectively a design standard, and that since NHTSA does not require an ultimate load analysis for vehicle structures there appeared to be no need for such a requirement for lifts. Stewart & Stevenson argued that static load test III has no safety benefit above that realized with a combination of static load test II and the finite element analysis already required by the ADAAG regulations and California Title 13. Braun and NMEDA argued that if the requirement were adopted, the test should be based on the rated capacity of the lift. Braun maintained that the fatigue endurance test, when coupled with the other static load tests adequately ensured the lifts were designed with sufficient safety factors.

We do not believe static load test III poses an onerous burden for lift manufacturers. By the same token, we are satisfied that the test is fully consistent with the design strictures of the ADA's implementation regulations. Ultimate strength tests for mechanical systems have long been standard practice.[12] Safety factors between 4 and 12 have traditionally been used for elevators, hoisting equipment, lifting

[12] The ultimate strength is the maximum unit stress that the material or system is capable of withstanding and is based on the product of the working load and a factor of safety. Minimum safety factors do not directly influence how a device performs its intended function. Rather, they serve to control the robustness of a complete device or its components parts, to assure that the device, as manufactured, will meet minimum requirements for safe operation in the intended environment for an assumed minimum service life, and to compensate for the variability of material strength and wear characteristics when average design values are used during the design process.

devices, as well as for the chains, cables, and pulleys incorporated into such devices.

The first formal requirements regarding wheelchair lifts for vehicles were published by the Veterans Administration in the mid-1970s as a set of procurement guidelines. These guidelines, which have served as the basis for many subsequent guidelines for both public and private use vehicles, required a safety factor of six and a working load of 181 kg (400 lb). The ultimate strength test under the DVA guidelines was 1,089 kg (2,400 lb).When the SAE developed its recommended practice for platform lifts, it took into consideration the trend towards heavier, powered wheelchairs and raised the recommended standard load to 272 kg (600 lb). However, it dropped the safety factor to four, maintaining an ultimate test strength of 1,089 kg (2,400 lb). Today's requirement adopting static load test III merely retains these long-standing requirements and assesses the strength of the lift's components in a way that is not already addressed by static load test II or the fatigue endurance test.

ADAAG regulations require a design load for public use lifts of at least 272 kg (600 lb) (49 CFR 38.23). The regulations also specify that working parts that can be expected to wear, such as cables, pulleys, and shafts, upon which the lift depends for support of the load, have a safety factor of at least six. Nonworking parts that are not expected to wear, such as the lift platform, frame and attachment hardware, must have a safety factor of three. Both safety factors are based on the ultimate strength of the particular component's material. A lift designed to meet these requirements should be able to withstand a load of 816 kg (1,800 lb) without separation, fracture or breakage of any portion of the lift. Additionally, those working parts that are expected to wear should be able to withstand a load of 1,632 kg (3,600 lb) without separation, fracture, or breakage. The California Title 13 requirements mirror these requirements.

Safety factors can be specified both as an element of design (design safety factor) and as a functional requirement subject to performance testing (testable safety factor). A design safety factor need not be tested at the level specified in order to provide the requisite level of safety, particularly when multiple design safety factors apply to a single system. In the case of the ADAAG regulations, we do not believe the lift, as a whole, can reasonably be tested at the higher minimum safety factor of 1,632 kg (3,600 lb) (6 times the design load). By the same token, we are unconvinced that static load test II, which tests the entire lift system at the minimum safety factor of three times the lift's design load, sufficiently guarantees that a lift's movable components are sufficiently robust. The question then becomes how to test for both those components that must have a design safety factor of 6 without unreasonably testing those components that only require a design factor of one-half that amount?

We believe that static load test III, when coupled with the fatigue endurance test, establishes performance requirements that adequately test for the design factors of the ADAAG regulations without imposing an undue burden on lift manufacturers. Non-working parts are actually required to meet a higher testable safety factor than the design factor specified in the ADAAG regulations. Working parts are required to meet a testable safety factor that in static load test III constitutes 67% of the amount specified as a design factor in the ADAAG regulations and must, under static load test II, remain fully operational after being subjected to a load that is 50% of the level specified in the ADAAG regulations. Finally, the fatigue endurance test amply evaluates whether those components likely to wear are suitable for safe operation of the lift in its intended environment, over a long period of time.

As discussed more fully above, we have decided to grant Braun and NMEDA's request that this test be based on a multiplier of the rated capacity of the lift, with a minimum rated load of 181 kg (400 lb). This will make the ultimate strength test load for private use lifts at least 724 kg (1,600 lb) and at least four times the lift's rated load.

5. Interlock Test Procedures

As discussed in the SNPRM, the proposed interlocks needed test procedures if they were to be incorporated into the standard. We have developed test procedures for those interlocks that remain. Testing for the first and second interlocks is as simple as attempting to drive the vehicle when the lift is deployed and attempting to deploy the lift when the vehicle is moving. The third interlock will be tested by placing a 23 kg (50 lb) test load on the lift platform when the lift is in a position in which it can be stowed and then attempting to stow the lift. The fourth interlock will be tested by placing a front wheel of the wheelchair test device on the inner roll stop so as to prevent its deployment and then verifying that the lift cannot move up or down. The interlock testing the wheelchair retention device will be conducted in the same way, although the device need not be deployed when the lift is within three inches of the ground. The last two interlocks will be tested by placing the front wheel of the wheelchair test device on the inner roll stop or outer barrier and attempting to operate the lift. If the platform is too small to allow only one front wheel to be placed on the inner roll stop or outer barrier, both front wheels may be placed on those devices.

IX. Vehicle Requirements

As discussed in the SNPRM, the proposed vehicle requirements would apply to all motor vehicles equipped with a platform lift. Certification of compliance with the lift standard would rest with the lift manufacturer, and each lift would be marked either ''DOT-private use lift'' or ''DOT-public use lift''. However, the vehicle manufacturer would have to certify that it followed all lift installation instructions (including installing the lift only on a vehicle that the lift manufacturer has identified as compatible), placed the required owner's manual insert in the vehicle owner's manual, and installed the control panel in a location specified by the vehicle standard and the installation instructions. The vehicle manufacturer or alterer would also need to assure that it has met the certification requirements in 49 CFR part 567. While the vehicle standard would not impose any new compliance costs, the costs of conducting a recall campaign for non-compliant vehicles would be borne by the vehicle manufacturer or alterer.

In the SNPRM we proposed requiring the platform lift be installed in accordance with the lift manufacturer's instructions, including the lift manufacturer's directions as to the appropriate vehicle type for the lift. Lift manufacturer's instructions could include operational tests to ensure that the lift has been properly installed. The majority of commenters agreed that requiring vehicle manufacturers or alterers to install lifts in the manner set forth in the lift manufacturer's installation instructions would adequately ensure that platform lifts are installed safely. NMEDA noted that lift manufacturers generally provide both instructions and formal training to their franchised dealers and there is a growing tendency to only sell lifts to those dealers who have received formal training. Ricon stated that while generic installation instructions are provided with each lift, variations in vehicle body styles made it impractical to provide specific instructions for every application. Accordingly, it maintained that the lift installer must bear some

responsibility for ensuring the integrity of the lift as installed on the vehicle.

We would agree that the vehicle manufacturer bears some responsibility for ensuring that the lift is installed in a manner that does not negate the lift manufacturer's certification of compliance. Several aspects of FMVSS No. 403 are dependent on the lift/vehicle interface. However, we do not expect a vehicle manufacturer to divine the lift manufacturer's intent on how these interfaces work. Instead, it is imperative that the lift manufacturer provides the vehicle manufacturer with all information and equipment needed to install the lift in a manner that will result in a fully functioning lift. These instructions should include any check tests that are required to verify that the interfacing is proper. We note that the lift manufacturer's greatest security is in highly detailed installation instructions. This is because the vehicle manufacturer must certify that it has followed those instructions when installing the lift. As for the comment that highly detailed instructions that apply to a series of vehicles are more useful that instructions provided with each lift, this issue has already been addressed earlier in this document.

We received no comments on the proposed requirements that the vehicle manufacturer place the owner's manual insert in the owner's manual or that the control panel be installed in a position where the lift operator would have an unobstructed view of the lift and its occupants. Those requirements are adopted as proposed in SNPRM.

Under today's rule, the vehicle manufacturer or alterer will need to ensure that the owner's manual insert, required by the lift standard, is placed in the vehicle owner's manual. If the vehicle does not come with an owner's manual, the vehicle manufacturer should take steps to ensure that the vehicle purchaser receives the insert. This could be achieved by placing the insert in a glove box or by attaching it to the vehicle steering wheel.

For vehicles equipped with a commercial lift, the vehicle manufacturer will need to ensure that the lift controls are installed in accordance with the lift manufacturer's instructions and in a location where the lift operator has an unobstructed view of the lift and it's occupants throughout the range of lift operation. The vehicle manufacturer will also need to place the lift operating instructions near the lift control for ready access by the lift operator.

X. Benefits of the Final Rule

NHTSA has not been able to quantify the benefits associated with this rule because the NEISS database lacks adequate descriptive information that would allow us to pinpoint the probable cause of injury. However, there are a number of qualitative benefits associated with today's rule. As an initial matter, today's rule incorporates the most relevant requirements of existing standards and guidelines. Accordingly, manufacturers need only comply with standard to be assured that all applicable requirements are met. This one-stop approach provides a consistent level of safety for all lift users. Today's rule also establishes objective means for determining compliance with the new standards. In many cases the existing standards do not provide an objective means of measurement. Accordingly, lift manufacturers may be in a position where they are unsure whether their lift designs actually meet all the requirements referenced in a particular set of contract specifications. Today's rule removes that doubt. Additionally, based on the ATBCB's performance and design guidelines, NHTSA has developed objective test specifications for platform deflection, static loads, inner roll stops, outer barriers, and slip resistance. These specifications provide an additional level of safety not addressed by existing guidelines. Finally, by adopting the existing guidelines and recommended practices as a safety standard, NHTSA can order the recall of non-compliant lifts, thereby establishing a mechanism for removing unsafe platform lifts from the market.

XI. Costs of the Final Rule

In the SNPRM, we estimated the costs of compliance with the proposed standard at less than $300 per lift. We believed the amount was so low because the lift requirements are all based on existing industry or governmental standards. However, Transport & Trolley estimated that the average cost of a lift today (not including installation) is about $3,000 for an active lift, and $7,000 for a passive lift. It then estimated that the cost to upgrade to the proposed standard would be approximately $1,000 per lift. It further estimated that the number of lifts affected by a new requirement would be between 15,000 and 20,000 lifts per year.

We believe the total consumer cost of today's rule is between $3.1 million and $4.7 million per year. This estimate is based on a cost of $213 per public-use vehicle and a cost of $147 per private use vehicle. A more thorough breakdown of the costs associated with compliance with the new standards may be found in the final regulatory evaluation supporting today's rule.

XII. Miscellaneous Issues

A. Axle Weight Limitations

VanHool stated that the technical requirements would increase the weight of the lift and, consequently, the weight of the vehicle on which the lift is installed. It asked whether Federal axle weight limitations would be adjusted to take into account the increased weight of the lift. NHTSA does not regulate limitations on axle weight. These limitations are imposed by other state and Federal agencies, and we cannot relax those standards for them. We do note that the weight of any lift system, regardless of whether it meets the requirements set forth in today's rule, could have an effect on the vehicle's axle weight. To the extent vehicle operators are concerned that the lifts may require a relaxation of existing axle weight limitations, the operators should raise their concerns with the appropriate regulatory authority.

B. Definitions in the FMVSS No. 403

As with the proposed regulatory text in the SNPRM, the regulatory text adopted today provides for a generic definition of ''motor home'' that applies to all FMVSS. Previously the term ''motor home'' was defined in each standard where such vehicles were specifically regulated. As a consequence, we developed two slightly different definitions. We have decided that this approach was potentially confusing. Additionally, we have no basis for using the term differently in different standards. Accordingly, we have added a definition of ''motor home'' to 49 CFR 571.3, which governs the definition of terms applicable to all safety standards. All standard specific definitions of motor homes have been removed from those standards.

C. Delayed Compliance With the ADA

As noted earlier in this document, several over-the-road bus manufacturers and operators, represented by the ABA and the UMA, raised concerns about whether a new standard would delay full implementation of the ADA to over-the-road vehicle operators. The commenters were concerned that they would be unable to comply with the requirements because lift manufacturers would focus their attention on the development of NHTSA-compliant lifts and would be unable to provide bus operators or manufacturers with lifts

that meet the accessibility requirements issued by the Department of Transportation. They also voiced concerns that vehicle operators would simply not purchase lift-equipped vehicles until the lifts on those vehicles were NHTSA-compliant.

Certainly, NHTSA has no desire to delay the implementation of the ADA accessibility requirements for over-the-road bus operators. However, we believe that such a delay is unwarranted. Nothing in today's rule is inconsistent with the Department's accessibility requirements.[13] Accordingly, we have no reason to believe lift manufacturers will cease production of lifts that meet the accessibility requirements simply because some minor changes may be required to bring their lifts into full compliance with FMVSS No. 403. Additionally, the NHTSA requirements in FMVSS No. 403 only apply to lifts manufactured after the rule's effective date, and the requirements of FMVSS No. 404 only apply to lift equipped vehicles manufactured after that same date. While NHTSA has the authority to promulgate safety standards for commercial motor vehicles and equipment that are already in use,[14] we are not exercising that authority for these standards. Thus, any lift-equipped over-the-road vehicle manufactured before the effective date of today's rule will not need to be certified as NHTSA compliant. If vehicle operators are concerned they may not take delivery of their vehicles until after the effective date of today's rule, they should specify in their purchase orders that the lifts should comply with NHTSA's requirements. In any case, the burden of compliance with NHTSA's standards rests on the lift and vehicle manufacturers and not on the operators.

XIII. Rulemaking Analyses and Notices

A. Executive Order 12866 and DOT Regulatory Policies and Procedures

NHTSA has considered the impact of this rulemaking action under Executive Order 12866 and the Department of Transportation's regulatory policies and procedures. This rulemaking is not economically significant. It is, however, classified as significant because of the public policy considerations entailed. Accordingly, the Office of Management and Budget has reviewed this rulemaking document under E.O. 12866, ''Regulatory Planning and Review.'' The rulemaking action has also been determined to be significant under the Department's regulatory policies and procedures. The costs and benefits associated with today's rule have been briefly discussed earlier in this document. For a more detailed analysis, please refer to the final regulatory evaluation supporting today's rule.

B. Regulatory Flexibility Act

We have considered the effects of this rulemaking action under the Regulatory Flexibility Act (5 U.S.C. 601 *et seq.*) This action will not have a significant economic impact on a substantial number of small businesses because it does not significantly exceed existing guidelines, contract specifications and industry recommended practices. As discussed in the final regulatory evaluation, the additional costs imposed by this rule will likely have a disproportionate impact on small businesses. However, small organizations and small governmental units will not be significantly affected by today's rule since the potential cost impacts associated with this rule should only slightly increase the price of new motor vehicles and of platform lifts. A fuller analysis of the impact of today's rule on small businesses, organizations, and governmental units may be found in the final regulatory evaluation.

C. National Environmental Policy Act

NHTSA has analyzed this proposed amendment for the purposes of the National Environmental Policy Act and determined that it will not have any significant impact on the quality of the human environment.

D. Executive Order 13132 (Federalism)

The agency has analyzed this rulemaking in accordance with the principles and criteria contained in Executive Order 13132 and has determined that it does not have sufficient federalism implications to warrant consultation with State and local officials or the preparation of a federalism summary impact statement. The final rule has no substantial effects on the States, or on the current Federal-State relationship, or on the current distribution of power and responsibilities among the various local officials. The final rule is not intended to preempt state tort civil actions.

E. Unfunded Mandate Reform Act

The Unfunded Mandates Reform Act of 1995 requires agencies to prepare a written assessment of the costs, benefits and other effects of proposed or final rules that include a Federal mandate likely to result in the expenditure by State, local or tribal governments, in the aggregate, or by the private sector, of more than $100 million annually (adjusted for inflation with base year of 1995). Today's rule will not require the expenditure of resources. This is because the additional incremental costs imposed by the new standards are estimated at $3.1 million to $4.7 million per year.

F. Executive Order 12778 (Civil Justice Reform)

This final rule does not have any retroactive effect. Under section 49 U.S.C. 30103, whenever a Federal motor vehicle safety standard is in effect, a state may not adopt or maintain a safety standard applicable to the same aspect of performance which is not identical to the Federal standard, except to the extent that the state requirement imposes a higher level of performance and applies only to vehicles procured for the State's use. 49 U.S.C. 30161 sets forth a procedure for judicial review of final rules establishing, amending or revoking Federal motor vehicle safety standards. That section does not require submission of a petition for reconsideration or other administrative proceedings before parties may file suit in court.

G. Paperwork Reduction Act

Under the Paperwork Reduction Act of 1995, a person is not required to respond to a collection of information by a Federal agency unless the collection displays a valid OMB control number. In the SNPRM, we sought comment on the estimated burden, in terms of labor and cost, to lift manufacturers. We received no comments on the estimated burden. This rule imposes new information collection requirements in that both new regulations would require certain disclosures to third parties.

We are submitting a request for OMB clearance of the collection of information required under today's rules. These requirements and our estimates of the burden to lift and vehicle manufacturers are as follows:

- Estimated burden to lift manufacturers to produce an insert for the vehicle owner's manual stating the lift's platform operating volume, maintenance schedule, and instructions regarding the lift operating procedures:

10 manufacturers × 24 hrs amortized over 5 yrs = 48 hrs per year.

- Estimated burden to lift manufacturers to produce an insert for

[13] Static load test III measures the strength of the lifts design features differently than is contemplated in the accessibility requirements. This is because the accessibility requirements do not provide any performance criteria. We believe that a lift that can sustain the weight specified in static load test III will be able to meet the design requirements of the accessibility requirements.

[14] For further information on this authority, *see* 65 FR 41014 (July 3, 2000).

the lift installation instructions identifying the vehicles on which the lift is designed to be installed:

10 manufacturers × 24 hrs amortized over 5 yrs = 48 hrs per year.

• Estimated burden to lift manufacturers to produce two labels for operating and backup lift operation:

10 manufacturers × 24 hrs amortized over 5 yrs = 48 hrs per year.

Total estimated burden = 144 hrs per year.

• Cost to lift manufacturers to produce:

Label for operating instructions	27,398 lifts × $0.13 per label	=	$3,561.74.
Label for backup operations	27,398 lifts × $0.13 per label	=	$3,561.74.
Owner's manual insert	27,398 lifts × $0.04 per page × 1 page	=	$1,095.92.
Installation instruction insert	27,398 lifts × $0.04 per page × 1 page	=	$1,095.92.
Total annual cost		=	$9,315.32.

H. Regulation Identifier Number (RIN)

The Department of Transportation assigns a regulation identifier number (RIN) to each regulatory action listed in the Unified Agenda of Federal Regulations. The Regulatory Information Service Center publishes the Unified Agenda in April and October of each year. You may use the RIN contained in the heading at the beginning of this document to find this action in the Unified Agenda.

I. Plain Language

Executive Order 12866 and the President's memorandum of June 1, 1998, require each agency to write all rules in plain language. Today's rule has been written with that directive in mind. We note that many of the requirements of today's rule are technical in nature. As such, they may require some understanding of technical terminology. We expect those parties directly affected by today's rule, *i.e.* platform lift manufacturers and vehicle manufacturers to be familiar with such terminology.

J. Executive Order 13045

Executive Order 13045 applies to any rule that: (1) Is determined to be ''economically significant'' as defined under E.O. 12866, and (2) concerns an environmental, health or safety risk that NHTSA has reason to believe may have a disproportionate effect on children. If the regulatory action meets both criteria, we must evaluate the environmental health or safety effects of the planned rule on children, and explain why the planned regulation is preferable to other potentially effective and reasonably feasible alternatives considered by us.

As noted earlier, this rule is not economically significant.Additionally, this rule will not have a disproportionate effect on children. This rulemaking directly involves decisions based on health risks that affect children only to the extent that a child is the intended user of a platform lift.

K. National Technology Transfer and Advancement Act

Section 12(d) of the National Technology Transfer and Advancement Act (NTTAA) requires NHTSA to evaluate and use existing voluntary consensus standards [15] in its regulatory activities unless doing so would be inconsistent with applicable law (*e.g.*, the statutory provisions regarding NHTSA's vehicle safety authority) or otherwise impractical. In meeting that requirement, we are required to consult with voluntary, private sector, consensus standards bodies. Examples of organizations generally regarded as voluntary consensus standards bodies include the American Society for Testing and Materials (ASTM), the SAE, and the American National Standards Institute (ANSI). If NHTSA does not use available and potentially applicable voluntary consensus standards, we are required by the Act to provide Congress, through OMB, an explanation of the reasons for not using such standards.

The equipment standard was drafted to include or exceed all existing government (FTA, ADA) and voluntary industry (*e.g.*, SAE) standards. The table in Appendix A shows the source of each requirement in FMVSS No. 403. The reader should note that only three requirements were added by NHTSA that do not already exist in other standards. Of these three, two are based on a comment on the NPRM by a service transportation provider.

Appendix to Preamble

SUMMARY OF REQUIREMENTS IN PROPOSED FMVSS 141, ''PLATFORM LIFTS FOR ACCESSIBLE MOTOR VEHICLES'' AND THEIR ANTECEDENTS

Requirement	Based on [16]
Threshold warning signal	SAE.
Max. platform velocity	ADA, FTA.
Max. platform acceleration	FTA, ADA, SAE.
Max. noise level	FTA.
Unobstructed platform operating volume	ADA.
Platform surface protrusions	FTA, ADA.
Gaps, transitions and openings	FTA, ADA, SAE.
Platform deflection	FTA, ADA, SAE.
Edge guards	FTA, ADA, SAE.
Wheelchair retention dynamic static	ADA, FTA, SAE.
Inner roll stop	FTA, ADA.
Handrails	ADA, SAE.
Platform markings	FTA.

[15] Voluntary consensus standards are technical standards developed or adopted by voluntary consensus standards bodies. Technical standards are defined by the NTTAA as ''performance-based or design-specific technical specifications and related management systems practices.'' They pertain to ''products and processes, such as size, strength, or technical performance of a product, process or material.''

SUMMARY OF REQUIREMENTS IN PROPOSED FMVSS 141, ''PLATFORM LIFTS FOR ACCESSIBLE MOTOR VEHICLES'' AND THEIR ANTECEDENTS—Continued

Requirement	Based on [16]
Platform lighting	FTA, ADA.
Platform slip resistance	FTA, ADA.
Platform free fall limits	ADA.
Control systems	FTA, ADA.
Jacking prevention	FTA, SAE.
Backup operation	FTA, ADA, SAE.
Interlocks: original NPRM 5	FTA, ADA.
2 new to the SNPRM	No comparable existing provision.
Owner's manual insert	No comparable existing provision.
Installation instruction insert	SAE.
Static Load Test I, Working Load, lift must operate normally with 600 pound load	FTA, ADA, SAE.
Static Load Test II, Proof Load, lift must sustain a load of 1800 lbs and operate normally after the load is removed. Safety Factor = 3.	FTA.
Static Load Test III, Ultimate Load, lift must sustain a load of 2400 lbs without failure, but does not need to operate after removal. SF=4.	SAE.
Environmental resistance for externally mounted lifts	SAE (based on FMVSS 209).
Fatigue Endurance	FTA, SAE
Operations Counter	FTA (optional).

List of Subjects in 49 CFR Part 571

Imports, Incorporation by reference, Motor vehicle safety, Motor vehicles, Rubber and rubber products, Tires.

In consideration of the foregoing, 49 CFR part 571 is amended as follows:

PART 571—FEDERAL MOTOR VEHICLE SAFETY STANDARDS

1. The authority citation for part 571 of title 49 continues to read as follows:

Authority: 149 U.S.C. 322, 30111, 30115, 30117, 30166 delegation of authority at 49 CFR 1.50.

2. Section 571.3 is amended by adding a definition of ''motor home'' to section 571.3(b), in alphabetical order, as follows:

§ 571.3 Definitions

* * * * *

(b) Other definitions. As used in this chapter —

* * * * *

Motor home means a multi-purpose vehicle with motive power that is designed to provide temporary residential accommodations, as evidenced by the presence of at least four of the following facilities: Cooking; refrigeration or ice box; self-contained toilet; heating and/or air conditioning; a potable water supply system including a faucet and a sink; and a separate 110–125 volt electrical power supply and/or an LP gas supply.

* * * * *

3. Section 571.105 is amended by removing the definition of *motor home* contained in *§ 571.105 S4, Definitions.*

4. Section 571.201 is amended by removing the definition of *motor home* contained in *§ 571.201 S3, Definitions.*

5. Section 571.205 is amended by removing the definition of *motor home* contained in *§ 571.205 S4, Definitions.*

6. Section 571.208 is amended by removing and reserving § 571.208 S4.2.4.1(a).

7. Section 571.403 is added to read as follows:

§ 571.403 Standard No. 403; Platform lift systems for motor vehicles.

S1. *Scope.* This standard specifies requirements for platform lifts used to assist persons with limited mobility in entering or leaving a vehicle.

S2. *Purpose.* The purpose of this standard is to prevent injuries and fatalities to passengers and bystanders during the operation of platform lifts installed in motor vehicles.

S3. *Application.* This standard applies to platform lifts designed to carry passengers into and out of motor vehicles.

S4. *Definitions.*

Bridging device means that portion of a platform lift that provides a transitional surface between the platform surface and the surface of the vehicle floor within the platform threshold area.

Cycle means deploying a platform lift from a stowed position, lowering the lift to the ground level loading position, raising the lift to the vehicle floor loading position, and stowing the lift. The term includes operation of any wheelchair retention device, bridging device, and inner roll stop.

Deploy means with respect to a platform lift, its movement from a stowed position to one of the two loading positions. With respect to a wheelchair retention device or inner roll stop, the term means the movement of the device or stop to a fully functional position intended to prevent a passenger from disembarking the platform or being pinched between the platform and vehicle.

Floor reference plane means the plane perpendicular to the longitudinal vehicle reference plane for platform lifts that deploy from the side of the vehicle or perpendicular to the transverse vehicle reference plane for platform lifts that deploy from the rear of the vehicle, and tangent to the outermost edge of the vehicle floor surface adjacent to the lift platform. (See figure 1.)

Gap means a discontinuity in a plane surface, or between two adjacent surfaces.

Inner roll-stop means a device that is located at the edge of the platform that a passenger or mobility aid must traverse when entering and exiting the

[16] ''Based on'' means that the standard or regulation shown in this column incorporated a requirement for the named area of lift operation. The proposed NHTSA requirement may, or may not be, identical to the requirement in the antecedent standard.

ADA = 49 CFR part 38, Regulations promulgated by DOT to implement the transportation accessibility requirements of the Americans with Disabilities Act, pursuant to guidelines issued by the Architectural and Transportation Barriers Compliance Board.

FTA = Federal Transit Administration Guideline Specifications for Passive and Active Lifts, procurement guidelines.

SAE = Society of Automotive Engineers J2309, ''Design Considerations for Wheelchair Lifts for Entry to or Exit from a Personally Licensed Vehicle,'' an industry consensus voluntary standard, which itself is based primarily on the Department of Veterans' Affairs procurement requirements. The DVA now uses the SAE standard as an alternative to its procurement standard.

platform from the vehicle floor loading position and that is designed to retain mobility aids on the platform surface during the range of passenger operation.

Lift reference plane means the plane that is defined by two orthogonal axes passing through the geometric center of the platform surface of a platform lift. One axis is perpendicular to the platform reference plane and the other is parallel to the direction of wheelchair travel during loading of the lift. (*See* figure 1.)

Loading position means, with respect to a platform lift, a position at which a passenger can either embark or disembark the lift. The two loading positions are at vehicle floor and ground level.

Longitudinal vehicle reference plane means the plane that is perpendicular to the floor reference plane and contains the longitudinal axis of the vehicle when the vehicle body is level and moves along with the vehicle body in response to the loading of the vehicle suspension. (*See* figure 1.)

Outer barrier is a particular wheelchair retention device that is located on the edge of the platform, is traversed during ground level loading and unloading, and is designed to retain wheelchairs on the platform surface during the range of passenger operation.

Platform means that portion of a platform lift on which the mobility aid or passenger rests while being raised or lowered.

Platform lift means a level change device, including any integration of existing vehicle components, and excluding a ramp, used to assist persons with limited mobility in entering or leaving a vehicle.

Platform reference plane means a plane tangent to the platform surface at its geometric center. (*See* figure 1.)

Platform surface means the passenger-carrying surface of the lift platform.

Platform threshold area means the rectangular area of the vehicle floor defined by moving a line that lies on the portion of the edge of the vehicle floor directly adjacent to the platform, through a distance of 457 mm (18 inches) across the vehicle floor in a direction perpendicular to the edge. Any portion of a bridging device that lies on this area must be considered part of that area.

Private use lift means a platform lift certified to the requirements for private use lifts and requirements in this standard for all lifts.

Public use lift means a platform lift certified to the requirements for public use lifts and requirements in this standard for all lifts.

Range of passenger operation means the portion of the lift cycle during which the platform is at or between the vehicle floor and ground level loading positions excluding any stow and deploy operations.

Standard test load means a static load or mass centered on the test pallet such that the total combined mass for public-use lifts shall be 272 kg (600 lb), and the total combined mass for private-use lifts shall be the lift manufacturer's stated rated load or 181 kg (400 lb), whichever is greater.

Stow means with respect to a platform, its movement from a position within the range of passenger operation to the position maintained during normal vehicle travel; and, with respect to a wheelchair retention device, bridging device, or inner-roll stop, its movement from a fully functional position to a position intended to allow a passenger to embark or disembark the platform.

Test pallet means a platform on which required test loads are placed for handling and moving.

Transverse vehicle reference plane means the plane that is perpendicular to the floor reference plane and contains the transverse axis of the vehicle when the vehicle body is level and that moves along with the vehicle body in response to the loading of the vehicle suspension. (*See* figure 1.)

Wheelchair retention device means a device designed to prevent wheelchairs from leaving the edge of the platform used for ground level loading and unloading during the range of passenger operation.

S5. *Incorporation by reference.*

S5.1 The Society of Automotive Engineers (SAE) Recommended Practice J578, revised June 1995, ''Color Specification'' (SAE J578, rev. June 95) is hereby incorporated into S6.1.4 by reference.

S5.2 The Society of Automotive Engineers (SAE) Recommended Practice J211/1, revised March 1995 ''Instrumentation for Impact Test—Part 1 —Electronic Instrumentation'' (SAE J211/1, rev. Mar 95) is hereby incorporated into S6.2.3 by reference.

S5.3 The American Society for Testing and Materials (ASTM) Recommended Practice B456–95 ''Standard Specification for Electrodeposited Coatings of Copper Plus Nickel Plus Chromium and Nickel Plus Chromium'' (ASTM B456–95) is hereby incorporated into S6.3.1 by reference.

S5.4 The Rehabilitation Engineering and Assistive Technology Society of North America (ANSI/RESNA) Standard WC/Vol.1–1998 Section 13, ''Determination of Coefficient of Friction of Test Surfaces'' (ANSI/RESNA WC/Vol.1—1998, sec. 13) is hereby incorporated into S7.2.2 by reference.

S5.5 The American Society for Testing and Materials (ASTM) Recommended Practice B117–97 ''Standard Practice for Operating Salt Spray (Fog) Apparatus'' (ASTM B117–97) is hereby incorporated into S7.3.2 by reference.

S5.6 The Director of the Federal Register approved the materials incorporated by reference in accordance with 5 U.S.C. 552(a) and 1 CFR part 51 (See § 571.5 of this part). Copies of the materials may be inspected at NHTSA's Technical Reference Library, 400 Seventh Street SW., Room 5109, Washington, DC or at the Office of the Federal Register, 800 North Capitol Street, NW., Suite 700, Washington, DC.

S5.6.1 The SAE materials referred to in S5.1 and S5.2 are available from the Society of Automotive Engineers, Inc., 400 Commonwealth Drive, Warrendale, PA. 15096.

S5.6.2 The ASTM materials referred to in S5.3 and S5.5 are available from ASTM International, 100 Barr Harbor Drive, PO Box C700, West Conshohocken, PA 19428–2959.

S5.6.3 The ANSI/RESNA materials referred to in S5.4 are available from RESNA, 1700 North Moore St., Suite 1540, Arlington, VA 22209–1903.

S6. *Requirements.*

(a) Each platform lift must comply with the requirements for private use lifts or public use lifts and with the requirements for all lifts.

(b) Each public use lift must

(1) Comply with the requirements for public use lifts and with the requirements for all lifts.

(2) Bear a label with the words ''DOT—Public Use Lift'' as certification of compliance with the requirements specified in paragraph S6(b)(1).

(c) Each private use lift must

(1) Comply with the requirements for private use lifts and with the requirements for all lifts.

(2) Bear a label with the words ''DOT—Private Use Lift'' as certification of compliance with the requirements specified in S6(c)(1).

(d) Platform lifts suitable for installation on buses, school buses, and MPVs other than motor homes with a GVWR greater than 4,536 kg (10,000 lb.), except motor homes, must be certified by the manufacturer as meeting the requirements for public use lifts. For platform lifts suitable for installation on all other vehicles, the manufacturer may select the option of certifying compliance with either the public use

lift requirements or the private use lift requirements of this standard at the time it certifies the vehicle and may not thereafter select a different option for the vehicle.

(e) For all lifts, where a range of values is specified, the equipment must meet the requirements at all points within the range.

(f) The test procedures in S7 are used to determine compliance with all requirements, except S6.6, S6.7.5, S6.12 and S6.13.

S6.1 *Threshold warning signal.*

S6.1.1 Except when the platform lift is operated manually in backup mode as required by S6.9, the lift must meet the requirements of S6.1.2 and S6.1.3. The lift is tested in accordance with S7.4 to determine compliance with this section.

S6.1.2. Private-use lifts: Except for platform lifts where platform loading takes place wholly over the vehicle floor, a visual or audible warning must activate if the platform is more than 25 mm (1 inch) below the platform threshold area and portions of a passenger's body or mobility aid is on the platform threshold area defined in S4 when tested in accordance with S7.4.

S6.1.3 Public-use lifts: A visual and audible warning must activate if the platform is more than 25 mm (1 inch) below the platform threshold area and portions of a passenger's body or mobility aid is on the platform threshold area defined in S4 when tested in accordance with S7.4.

S6.1.4 The visual warning required by S6.1.2 and S6.1.3 must be a flashing red beacon as defined in SAE J578, June 95, must have a minimum intensity of 20 candela, a frequency from 1 to 2 Hz, and must be installed such that it does not require more than ± 15 degrees side-to-side head rotation as viewed by a passenger backing onto the platform from the interior of the vehicle. If a lift has only a visual alarm and the lift manufacturer specifies that the passenger must load onto the platform in a forward direction from the vehicle floor, the visual alarm must be located such that it does not require more than ± 15 degrees side-to-side head rotation as viewed by a passenger traversing forward onto the platform.

S6.1.5 The audible warning required by S6.1.2 and S6.1.3 must be a minimum of 85 dBA between 500 and 3000 Hz.

S6.1.6 The intensity of the visual or audible warnings required by S6.1.2 and S6.1.3 is measured at the location 914 mm (3 ft) above the center of the platform threshold area. (See figure 2.)

S6.2 *Platform lift operational requirements.*

S6.2.1 *General.* Throughout the range of passenger operation and during the lift operations specified in S7.6, the platform lift must meet the requirements of S6.2.2 through S6.2.4. These requirements must be satisfied both with and without a standard load on the lift platform, except for S6.2.2.2, which must be satisfied without any load.

S6.2.2 *Maximum platform velocity.*

S6.2.2.1 Throughout the range of passenger operation specified in S7.9.4 through S7.9.7, both the vertical and horizontal velocity of the platform must be less than or equal to 152 mm (6 inches) per second when measured at the geometric center of the platform when the platform is unloaded and at the geometric center of the top, horizontal surface of the standard load specified in S7.1.1 when the platform is loaded.

S6.2.2.2 During the stow and deploy operations specified in S7.9.3 and S7.9.8, both the vertical and horizontal velocity of any portion of the platform must be less than or equal to 305 mm (12 inches) per second.

S6.2.3 *Maximum platform acceleration.* Throughout the range of passenger operation specified in S7.9.4 through S7.9.7, both the horizontal and vertical acceleration of the platform must be less than or equal to 0.3 g after the accelerometer output is filtered with a channel frequency class (CFC) 3 filter. The filter must meet the requirements of SAE Recommended Practice J211/1, rev. Mar 95, with F_H = 3 Hz and F_N = 5 Hz. The accelerometer is located at the geometric center of the platform and is mounted directly on the platform when it is unloaded and on the geometric center of the top, horizontal surface of the standard load specified in S7.1.1 when the platform is loaded.

S6.2.4 *Maximum noise level of public use lifts.* Except as provided in S6.1.5, throughout the range of passenger operation specified in S7.9.4 through S7.9.7, the noise level of a public use lift may not exceed 80 dBa as measured at any lift operator's position designated by the platform lift manufacturer for the intended vehicle and in the area on the lift defined in S6.4.2.1 and S6.4.2.2. Lift operator position measurements are taken at the vertical centerline of the control panel 30.5 cm (12 in) out from the face of the control panel. In the case of a lift with a pendant control, measurement is taken at the vertical centerline of the control panel 30.5 cm (12 in) out from the face of the control panel while the control panel is in its stowed or stored position. For the lift operator positions outside of the vehicle, measurements are taken at the intersection of a horizontal plane 157 cm (62 in) above the ground and the vertical centerline of the face of the control panel after it has been extended 30.5 cm (12 in) out from the face of the control panel.

S6.3 *Environmental resistance.*

S6.3.1 *Internally mounted platform lifts.* On platform lifts and their components internal to the occupant compartment of the vehicle when stowed, attachment hardware must be free of ferrous corrosion on significant surfaces except for permissible ferrous corrosion, as defined in FMVSS No. 209, at peripheral surface edges or edges of holes on under-floor reinforcing plates and washers after being subjected to the conditions specified in S7.3. Alternatively, such hardware must be protected against corrosion by an electrodeposited coating of nickel, or copper and nickel with at least a service condition number of SC2, and other attachment hardware must be protected by an electrodeposited coating of nickel, or copper and nickel with a service condition number of SC1, in accordance with ASTM B456–95, but such hardware may not be racked for electroplating in locations subjected to maximum stress. The lift must be accompanied by all attachment hardware necessary for its installation on a vehicle.

S6.3.2 *Externally mounted platform lifts.* On platform lifts and their components external to the occupant compartment of the vehicle when stowed, the lift and its components must be free of ferrous corrosion on significant surfaces except for permissible ferrous corrosion, as defined in FMVSS No. 209, at peripheral surface edges and edges of holes and continue to function properly after being subjected to the conditions specified in S7.3. The lift must be accompanied by all attachment hardware necessary for its installation on a vehicle.

S6.4 *Platform requirements.*

S6.4.1 *General.* Throughout the range of passenger operations and during the platform lift operations specified in S7.9.4 through S7.9.7, the platform lift must meet the requirements of S6.4.2 through S6.4.12. The requirements of S6.4.2 through S6.4.6, S6.4.7.4, S6.4.9.4, S6.4.9.5, S6.4.9.6, and S6.4.9.8 must be satisfied both with and without a standard load on the lift platform

S6.4.2 *Unobstructed platform operating volume.*

S6.4.2.1 *Public use lifts.* For public use lifts, the minimum platform operating volume is the sum of an upper part and a lower part (see Figure 3). The lower part is a rectangular solid whose

base is 725 mm (28.5 in) wide by the length of the platform surface, whose height is 50 mm (2 in), and which is resting on the platform surface with each side of the base parallel with the nearest side of the platform surface. The width is perpendicular to the lift reference plane and the length is parallel to the lift reference plane (See Figure 1). The upper part is a rectangular solid whose base is 760 mm (30 in) by 1,220 mm (48 in) long, whose height is 711 mm (28 in), and whose base is tangent to the top surface of the lower rectangular solid (see Figure 3). The centroids of both the upper and lower parts coincide with the vertical centroidal axis of the platform reference plane (see Figure 1).

S6.4.2.2 *Private use lifts.* For private use lifts, the platform operating volume is as specified by the lift manufacturer and identified in the lift insert to the vehicle owner's manual.

S6.4.3 *Platform surface protrusions.*

S6.4.3.1 *Public use lifts.* For public use lifts, except as required for deployment of the wheelchair retention device and inner roll stop, throughout the range of passenger operation, the platform surface may not have protrusions which rise more than 6.5 mm (0.25 in) above the platform surface, measured perpendicular to the platform surface by a device with its base centered between 50–100 mm (2–4 in) from the protrusion. Any cross-sectional dimension of the base of the protrusion measurement device must be greater than or equal to 25mm (1 in) and less than or equal to 50 mm (2 in).

S6.4.3.2 *Private use lifts.* For private use lifts, except as required for deployment of the wheelchair retention device and inner roll stop, the platform surface may not have protrusions which rise more than 13 mm (0.5 in) above the platform surface, measured perpendicular to the platform surface by a device with its base centered between 50–100 mm (2–4 in) from the protrusion. All portions of the sides of a protrusion that are between 6.5 mm (0.25 in) and 13 mm (0.5 in) above the platform must have a slope not greater than 1:2, measured with respect to the platform surface at the location of the protrusion. Any cross-sectional dimension of the base of the protrusion measurement device must be greater than or equal to 25mm (1 in) and less than or equal to 50 mm (2 in).

S6.4.4 *Gaps, transitions and openings.*

S6.4.4.1 When the platform lift is at the ground level loading position, any vertical surface transition measured perpendicular to the ground over which a passenger may traverse to enter or exit the platform, may not be greater than 6.5 mm (0.25 in). When the lift is at the vehicle level loading position, any vertical surface transition measured perpendicular to the platform threshold area over which a passenger may traverse to enter or exit the platform, may not be greater than 6.5 mm (0.25 in).

S6.4.4.2 When the platform lift is at the ground or vehicle level loading position, the slope of any surface over which a passenger may traverse to enter or exit the platform must have a rise to run not greater than 1:2 on the portion of the rise between 6.5 mm (0.25 in) and 13 mm (0.5 in), and 1:8 on the portion of the rise between 13 mm (0.5 in) and 75 mm (3 in). The rise of any sloped surface may not be greater than 75 mm (3 inches). When the lift is at the ground level loading position, measurements are made perpendicular to the ground. When the lift is at the vehicle level loading position, measurements are made perpendicular to the platform threshold area.

S6.4.4.3 When the inner roll stop or any outer barrier is deployed, any gap between the inner roll stop and lift platform and any gap between the outer barrier and lift platform must prevent passage of the clearance test block specified in S7.1.3 when its long axis is held perpendicular to the platform reference plane.

S6.4.4.4 When the platform is at the vehicle floor or ground level loading position, any horizontal gap over which a passenger may traverse to enter or exit the platform must prevent passage of a 13 mm (0.5 inch) diameter sphere.

S6.4.4.5 Any opening in that portion of the platform surface that coincides with the unobstructed platform operating volume described in S6.4.2 must prevent passage of a 19 mm (0.75 inch) diameter sphere.

S6.4.4.6 Any gap between the platform sides and edge guards which move with the platform must prevent passage of a 13 mm (0.5 inch) diameter sphere. Where structures fixed to the vehicle are used as edge guards, the horizontal gap between the platform side and vehicle structure must prevent passage of a 6.5 mm (0.25 inch) diameter sphere.

S6.4.5 *Platform deflection.* The angle of the platform, when stationary, relative to the vehicle floor reference plane may not be more than 1.8 degrees with no load on the platform. The angle of the platform loaded with a standard load, when stationary, may not deflect more than 3 degrees from its unloaded position. The angles are measured between axes perpendicular to the vehicle floor and platform reference planes.

S6.4.6 *Edge guards.*

S6.4.6.1 The platform lift must have edge guards that extend continuously along each side of the lift platform to within 75 mm (3 inches) of the edge of the platform that is traversed while entering and exiting the platform from the ground level loading position. The edge guards must be parallel to the direction of wheelchair movement during loading and unloading.

S6.4.6.2 Edge guards that move with the platform must have vertical sides facing the platform surface and a minimum height of 38 mm (1.5 inches), measured vertically from the platform surface.

S6.4.6.3 Except whenever any part of the platform surface is below a horizontal plane 75 mm (3 inches) above the ground, edge guards must be deployed throughout the range of passenger operation.

S6.4.7 *Wheelchair retention.*

S6.4.7.1 *Impact I.* Except for platform lifts designed so that platform loading takes place wholly over the vehicle floor, the lift must have a means of retaining the test device specified in S7.1.2. After impact, the test device must remain upright with all of its wheels on the platform surface throughout its range of passenger operation, except as provided in S6.4.7.4. The lift is tested in accordance with S7.7 to determine compliance with this section.

S6.4.7.2 *Impact II.* For platform lifts designed so that platform loading takes place wholly over the vehicle floor, the lift must have a means of retaining the test device specified in S7.1.2. After impact, the test device must remain upright with all of its wheels on the platform surface, throughout the range of passenger operation, except as provided in S6.4.7.4. The lift is tested in accordance with S7.7 to determine compliance with this section.

S6.4.7.3 *Overload.* The deployed wheelchair retention device(s) must be capable of sustaining 7,117 N (1,600 lb force) when tested in accordance with S7.13. No separation, fracture, or breakage of the wheelchair retention device may occur as a result of conducting the test in S7.13.

S6.4.7.4 *Deployment.* Except whenever any part of the platform surface is below a horizontal plane 75 mm (3 in) above the ground, the wheelchair retention device(s) must be deployed throughout the range of passenger operation.

S6.4.8 *Inner roll stop.*

S6.4.8.1 *Public use lifts.* Public use lifts must have an inner roll stop that meets the requirements of S6.4.8.3.

S6.4.8.2 *Private use lifts.* Private use lifts must:

(a) Have an inner roll stop that meets the requirements of S6.4.8.3; or

(b) Have operating instructions near the lift controls and in the vehicle owner's manual, as specified in S6.7.8 and S6.12.4.3, that contain a warning that wheelchairs should back onto the platform when entering from the ground.

S6.4.8.3 *Requirements.* When tested in accordance with S7.8, platform lifts must have an inner roll stop that provides a means that prevents:

(a) The front wheels of the test device specified in S7.1.2 from passing over the edge of the platform where the roll stop is located, when the lift is at the ground level loading position; and

(b) Any portion of the test device specified in S7.1.2 from being contacted simultaneously with a portion of the lift platform and any other structure, throughout the lift's range of passenger operation.

S6.4.9 *Handrails.*

S6.4.9.1 *Public use lifts:* Public use lifts must have a handrail located on each side of the lift that meets the requirements of S6.4.9.3 through S6.4.9.9.

S6.4.9.2 *Private use lifts:* Private use lifts are not required to be equipped with handrails. Private use lifts that are equipped with handrails must meet the requirement of S6.4.9.3 through S6.4.9.9.

S6.4.9.3 The graspable portion of each handrail may not be less than 762 mm (30 inches) and more than 965 mm (38 inches) above the platform surface, measured vertically.

S6.4.9.4 The cross section of the graspable portion of each handrail may not be less than 31.5 mm (1.25 inches) and more than 38 mm (1.5 inches) in diameter or width, and may not have less than a 3.2 mm (0.125 inch) radii on any corner.

S6.4.9.5 The vertical projection of the graspable portion of each handrail must intersect two planes that are perpendicular to the platform reference plane and to the direction of travel of a wheelchair on the lift when entering or exiting the platform, and are 203 mm (8 inches) apart.

S6.4.9.6 The handrails must move such that the position of the handrails relative to the platform surface does not change.

S6.4.9.7 When tested in accordance with S7.12.1, each handrail must withstand 445 N (100 pounds force) applied at any point and in any direction on the handrail without more than 25 mm (1 inch) of displacement relative to the platform surface. After removal of the load, the handrail must exhibit no permanent deformation.

S6.4.9.8 When tested in accordance with S7.12.1, there must be at least 38 mm (1.5 inches) of clearance between each handrail and any portion of the vehicle, throughout the range of passenger operation.

S6.4.9.9 When tested in accordance with S7.12.2, each handrail must withstand 1,112 N (250 lb/f) applied at any point and in any direction on the handrail without sustaining any failure, such as cracking, separation, fracture, or more than 102 mm (4 inches) of displacement of any point on the handrails relative to the platform surface.

S6.4.10 *Platform markings on public use lifts.* Throughout the range of passenger operation, all edges of the platform surface, the visible edge of the vehicle floor or bridging device adjacent to the platform lift, and any designated standing area on a public use lift must be outlined. The outlines must be at least 25 mm (1 in) wide and of a color that contrasts with its background by 60 percent, determined according to the following equation:

$$\text{Contrast} = 100 \times [(L1 - L2)/L1]$$

Where:

L1 = luminance of the lighter color or shade, and

L2 = luminance of the darker color or shade.

L1 and L2 are measured perpendicular to the platform surface with illumination provided by a diffuse light and a resulting luminance of the platform surface of 323 lm/m^2 (30 lumen/sqft).

S6.4.11 *Platform lighting on public use lifts.* Public use lifts must have a light or a set of lights that provide at least 54 lm/m^2 (5 lm/sqft) of luminance on all portions of the surface of the platform, throughout the range of passenger operation. The luminance measured on all portions of the surface of the passenger unloading ramp at ground level must be at least 11 lm/m^2 (1 lm/sqft).

S6.4.12 *Platform slip resistance.* When tested in accordance with S7.2, the coefficient of friction, in any direction, of any part of a wet platform surface may not be less than 0.65.

S6.5 *Structural integrity.*

S6.5.1 *Fatigue endurance.*

S6.5.1.1 *Public use lifts.* Public use lifts must remain operable when operated through a total of 15,600 cycles: 7,800 unloaded Raise/Lower and Stow/Deploy operations and 7,800 loaded Raise/Lower operations as specified in S7.10. No separation, fracture, or breakage of any vehicle or lift component may occur as a result of conducting the fatigue test in S7.10.

S6.5.1.2 *Private use lifts.* Private use lifts must remain operable when operated through a total of 4,400 cycles: 2,200 unloaded Raise/Lower and Stow/Deploy operations and 2,200 loaded Raise/Lower operations as specified in S7.10. No separation, fracture, or breakage of any vehicle or lift component may occur as a result of conducting the fatigue test in S7.10.

S6.5.2 *Proof load.* The platform lift must be capable of holding three times the standard load, as specified in S7.11, without separation, fracture, or breakage of any vehicle or lift component. After the test, the lift must pass Static Load Test I as specified in S7.9.

S6.5.3 *Ultimate load.* The platform lift must be capable of holding four times the standard load, as specified in S7.14, without separation, fracture, or breakage of the platform, supporting structure, or lifting mechanism.

S6.6 *Platform free fall limits.* In the event of any single-point failure of systems for raising, lowering or supporting the platform, any portion of the platform, loaded as specified in S7.1.1, may not fall vertically faster than 305 mm (12 in) per second or change angular orientation more than 2 degrees from the orientation prior to the failure. This requirement applies whenever the lift is under primary power source operation or manual backup operation.

S6.7 *Control systems.*

S6.7.1 The platform lift must meet the requirements of S6.7.2 through S6.7.8 and, when operated by means of the control system specified in S6.7.2, must perform the lift operations specified in S7.9.

S6.7.2 The platform lift system must have a control system that performs not less than the following functions:

S6.7.2.1 Enables and disables the lift control system. This function must be identified as ''Power'' if located on the control. The Power function must have two states: ''On'' and ''Off''. The ''On'' state must allow platform lift operation. When the Power function is in the ''On'' state, an indicator light on the controls must illuminate. The ''Off'' state must prevent lift operation and must turn off the indicator light. Verification with this requirement is made throughout the lift operations specified in S7.9.3 through S7.9.8.

S6.7.2.2 Moves the lift from a stowed position to one of the two loading positions. This function must be identified as ''Deploy'' or ''Unfold'' on the control.

S6.7.2.3 Lowers the lift platform. This function must be identified as ''Down'' or ''Lower'' on the control.

S6.7.2.4 Raises the lift platform. This function must be identified as ''Up'' or ''Raise'' on the control.

S6.7.2.5 Moves the lift from a position within the range of passenger operation to a stowed position. This function must be identified as ''Stow'' or ''Fold'' on the control.

S6.7.3 Except for the Power function described in S6.7.2.1, the functions specified in S6.7.2 must activate in a momentary fashion, by one switch or by a combination of switches. Verification with this requirement is made throughout the lift operations specified in S7.9.3 through S7.9.8.

S6.7.4 Except for the Power function described in S6.7.2.1, the control system specified in S6.7.2 must prevent the simultaneous performance of more than one function. Verification with this requirement is made throughout the lift operations specified in S7.9.3 through S7.9.8.

S6.7.5 Any single-point failure in the control system may not prevent the operation of any of the interlocks as specified in S6.10

S6.7.6 *Identification of operating functions.*

S6.7.6.1 Each operating function of each platform lift control must be identified with characters that are at least 2.5 mm (0.1 in) in height.

S6.7.6.2 *Public use lifts:* Public use lifts must have characters that are illuminated in accordance with S5.3 of Standard No. 101, when the vehicle's headlights are illuminated.

S6.7.7 *Control location for public use lifts:* In public use lifts, except for the backup operation specified in S6.9, all controls must be positioned together and in a location such that a person facing the controls has a direct, unobstructed view of the platform lift passenger and the passenger's mobility aid, if applicable. Verification with this requirement is made throughout the lift operations specified in S7.9.3 through S7.9.8. Additional controls may be positioned in other locations.

S6.7.8 *Operating instructions:* Simple instructions regarding the platform lift operating procedures, including backup operations as specified by S6.9, must:

S6.7.8.1 Be located near the controls.

S6.7.8.2 Have characters with a minimum height of 2.5 mm (0.1 in) and written in English.

S6.7.8.3 *Public use lifts:* Include the statement ''DOT—Public Use Lift''.

S6.7.8.4 *Private use lifts:* Include the statement ''DOT—Private Use Lift'', the manufacturer's rated load for the lift, and, if applicable, instructions indicating that the wheelchair occupant must back onto the lift when loading from the ground.

S6.8 *Jacking prevention.*

S6.8.1 Except when the platform lift is operated in backup mode as required by S6.9, throughout the lift operations specified in S7.9.4 and S7.9.7, the lift system must meet the requirements of S6.8.2, both with and without a standard load on the lift.

S6.8.2 The control system or platform lift design must prevent the raising of any portion of the vehicle by the lift system when lowering the lift is attempted while the lift is at the ground level loading position.

S6.9 *Backup operation.*

S6.9.1 The platform lift must be equipped with a manual backup operating mode that can, in the event there is a loss of the primary power source for lift operation or a lift malfunction, deploy the lift, lower the loaded platform to the ground level loading position, raise the unloaded platform to the vehicle floor loading position, and stow the lift. During backup operation of the lift, the wheelchair retention device and inner roll stop must be manually deployable and stowable. The operating instructions near the lift controls and in the vehicle owner's manual insert, as specified in S6.7.8 and S6.12.2, must contain information on manual backup operation which must include manual operation of the wheelchair retention device and inner roll stop during backup operation of the lift.

S6.10 *Interlocks.*

S6.10.1 Except when the platform lift is operated in backup mode as required by S6.9, the requirements of S6.10.2 must be met, both with and without a standard load on the lift.

S6.10.2 The platform lift system must have interlocks or operate in such a way as to prevent:

S6.10.2.1 Forward or rearward mobility of the vehicle unless the platform lift is stowed. The design of this system must be such that it discourages accidental release and does not affect vehicle movement when the lift is stowed until the vehicle is stopped and the lift deployed. Verification with this requirement is made throughout the lift operations specified in S7.9.2 and S7.9.3.

S6.10.2.2 Operation of the platform lift from the stowed position until forward and rearward mobility of the vehicle is inhibited, by means of placing the transmission in park or placing the transmission in neutral and actuating the parking brake or the vehicle service brakes by means other than the operator depressing the vehicle's service brake pedal. Verification with this requirement is made throughout the lift operations specified in S7.9.2 and S7.9.3.

S6.10.2.3 Except for platform lifts designed to be occupied while stowed, stowing of the platform lift when occupied by portions of a passenger's body, and/or a mobility aid. Verification with this requirement is made throughout the lift operations specified in S7.9.7 and S7.9.8, and using the test device specified in S7.1.4 when the device is placed on its narrowest side on any portion of and within the boundaries of the area of the platform that coincides with the unobstructed platform operating volume described in S6.4.2.

S6.10.2.4 Movement of the platform up or down unless the inner roll stop required to comply with S6.4.8 is deployed. When the platform reaches a level where the inner roll stop is designed to deploy, the platform must stop unless the inner roll stop has deployed. Verification with this requirement is made by performing the test procedure specified in S7.6.

S6.10.2.5 Movement of the platform up or down, throughout the range of passenger operation, when the platform surface is above a horizontal plane 75 mm (3 in) above the ground level loading position, unless the wheelchair retention device required to comply with S6.4.7 is deployed throughout the range of passenger operations. Verification of compliance is made using the test procedure specified in S 7.5.

S6.10.2.6 In the case of a platform lift that is equipped with an outer barrier, deployment of the outer barrier, when it is occupied by portions of a passenger's body or mobility aid throughout the lift operations. Verification of compliance is made using the test procedure specified in S 7.5.

S6.10.2.7 Deployment of any inner roll stop required to comply with S6.4.8, when the inner roll stop is occupied by portions of a passenger's body or mobility aid throughout the lift operations. Verification of compliance with this requirement uses the test procedure specified in S7.6.

S6.11 *Operations counter.* The platform lift must have an operation or cycle counter that records each complete Up/Down (Raise/Lower) operation throughout the range of passenger operation. Determination of compliance with this requirement is made during the lift operations specified in S7.9.4 and S7.9.5.

S6.12 *Vehicle owner's manual insert.* The lift manufacturer must provide with the lift, inserts for the

vehicle owner's manual that provide specific information about the platform lift. The vehicle owner's manual insert must be written in English and must include:

S6.12.1 A maintenance schedule that includes maintenance requirements that have, at a minimum, some dependency on the number of cycles on the operations counter specified in S6.11.

S6.12.2 Instructions regarding the platform lift operating procedures, including backup operations, as specified by S6.9.

S6.12.3 *Public use lifts:* In addition to meeting the requirements of S6.12.1 and S6.12.2, the owner's manual insert for public use lifts must also include:

S6.12.3.1 The statement ''DOT—Public Use Lift'' on the front cover of the vehicle owner's manual insert; and

S6.12.3.2 The statement ''*DOT—Public Use Lift''* verifies that this platform lift meets the ''public use lift '' requirements of FMVSS No. 403. This lift may be installed on all vehicles appropriate for the size and weight of the lift, but must be installed on buses, school buses, and multi-purpose passenger vehicles other than motor homes with a gross vehicle weight rating (GVWR) that exceeds 4,536 kg (10,000 lb).''

S6.12.4 Private use lifts: In addition to meeting the requirements of S6.12.1 and S6.12.2, the owner's manual insert for private use lifts must also include:

S6.12.4.1 The dimensions that constitute the unobstructed platform operating volume;

S6.12.4.2 The manufacturer's rated load for the lift;

S6.12.4.3 Information on whether a wheelchair user must back onto the platform from the ground level loading position due to the absence of an inner roll stop;

S6.12.4.4 The statement ''DOT-Private Use Lift'' on the front cover of the vehicle owner's manual insert; and

S6.12.4.5 The statement ''*DOT-Private Use Lift* verifies that this platform lift meets only the ''private use lift'' requirements of FMVSS No. 403. This lift may be installed on all vehicles appropriate for the size and weight of the lift, except for buses, school buses, and multi-purpose passenger vehicles other than motor homes with a gross vehicle weight rating (GVWR) that exceeds (4,536 kg) 10,000 lb.''

S6.13 *Installation instructions.* The manufacturer of a platform lift must include installation instructions with each lift. Information must be included in the installation instructions that identifies:

S6.13.1 The vehicles on which the lift is designed to be installed. Vehicles may be identified by listing the make, model, and year of the vehicles for which the lift is suitable, or by specifying the design elements that would make a vehicle an appropriate host for the particular lift, and for which the platform lift manufacturer has certified compliance.

S6.13.2 Procedures for operational checks that the vehicle manufacturer must perform to verify that the lift is fully operational. Such checks include, but are not limited to, platform lighting, the threshold-warning signal, and interlocks, including those that interface with vehicle systems.

S6.13.3 Any informational material or labels that must be placed on or in the vehicle in order to comply with the requirements of this standard. Labels must be of a permanent nature that can withstand the elements of the outside environment.

S6.13.4 Public use lifts: In addition to meeting the requirements of S6.13.1 through S6.13.3, the installation instructions for public use lifts must also include, on the front cover of the instructions, the statement ''DOT-Public Use Lift''.

S6.13.5 Private use lifts: In addition to meeting the requirements of S6.13.1 through S6.13.3, the installation instructions for private use lifts must also include, on the front cover of the instructions, the manufacturer's rated load for the lift and the statement ''DOT-Private Use Lift''.

S7. *Test conditions and procedures.* Each platform lift must be capable of meeting all of the tests specified in this standard, both separately, and in the sequence specified in this section. The tests specified in S7.8 through S7.11 are performed on a single lift and vehicle combination. The tests specified in S7.2 through S7.7, and S7.12 through S7.14 may be performed with the same lift installed on a test jig rather than on a vehicle. Certification tests of requirements in S6.1 through S6.11 may be performed on a single lift and vehicle combination, except for the requirements of S6.5.3. Attachment hardware may be replaced if damaged by removal and reinstallation of the lift between a test jig and vehicle.

S7.1 *Test devices.*

S7.1.1 *Test pallet and load.* The surface of the test pallet that rests on the platform used for the tests specified in S7.6 through S7.8 and S7.11 has sides that measure between 660 mm (26 in) and 686 mm (27 in). For the tests specified in S7.6 and S7.7, the test pallet is made of a rectangular steel plate of uniform thickness and the load that rests on the test pallet is made of rectangular steel plate(s) of uniform thickness and sides that measure between 533 mm (21 in) and 686 mm (27 in). The standard test load that rests on the pallet is defined in S4.

S7.1.2 *Wheelchair test device.* The test device is an unloaded power wheelchair whose size is appropriate for a 95th percentile male and that has the dimensions, configuration and components described in S7.1.2.1 through S7.1.2.10. If the dimension in S7.1.2.9 is measured for a particular wheelchair by determining its tipping angle, the batteries are prevented from moving from their original position.

S7.1.2.1 a cross-braced steel frame;

S7.1.2.2 a sling seat integrated in the frame;

S7.1.2.3 a belt drive;

S7.1.2.4 detachable footrests, with the lowest point of the footrest adjustable in a range not less than 25 mm (1 in) to 123 mm (5 in) from the ground;

S7.1.2.5 two pneumatic rear wheels with a diameter not less than 495 mm (19.5 in) and not more than 521 mm (20.5 in);

S7.1.2.6 two pneumatic front wheels with a diameter not less than 190 mm (7.5 in) and not more than 216 mm (8.5 in);

S7.1.2.7 a distance between front and rear axles not less than 457 mm (18 in) and not more than 533 mm (21 in);

S7.1.2.8 a horizontal distance between rear axle and center of gravity not less than 114 mm (4.5 in) and not more than 152 mm (6.0 in);

S7.1.2.9 a vertical distance between ground and center of gravity not less than 260 mm (10.25 in) and not more than 298 mm (11.75 in);

S7.1.2.10 a mass of not less than 72.5 kg (160 lb) and not more than 86.0 kg (190 lb).

S7.1.3 *Clearance test block for gaps, transitions, and openings.* The clearance test block is made of a rigid material and is 16 x 16 x 100 mm (0.625 x 0.625 x 4.0 in) with all corners having a 1.6 mm (0.0625 inch) radius.

S7.1.4 *Test Device for detecting platform occupancy.* Occupancy of the platform is detected using a 152 x 152 x 305 mm (6 x 6 x 12 inches) rigid box having a total weight of 22.7 kg (50 lb).

S7.2 *Slip resistance test.*

S7.2.1 To determine compliance with S6.4.12, clean any 450mm x 100mm (17.5 in x 3.94 in) section of the platform with household glass cleaner (ammonia hydroxide solution). Wet the cleaned section of the platform by evenly spraying 3 ml (0.10 oz) of distilled water per 100 cm\2\ (15.5 in\2\) of surface area. Begin the test

specified in S7.2.2 within 30 seconds of completion of the wetting process.

S7.2.2 Use the test procedure defined in ANSI/RESNA WC/Vol. 1–1998, sec.13, except for clauses 5.3, Force Gage and 6, Test Procedure, on the wet section of platform. In lieu of clauses 5.3 and 6, implement the requirements of S7.2.2.1 and S7.2.2.2.

S7.2.2.1 *Force gage.* The pulling force is measured, at a frequency of at least 10 Hz, by a force gauge that has been calibrated to an accuracy of ± 2 percent of the reading in the range of 25N to 100N.

S7.2.2.2 *Test procedure.* Before the test, prepare the surface of the test rubber by lightly abrading with waterproof silicon carbide paper, grade P120, weight D (120 wet and dry). Then wipe the surface clean with a dry cloth or brush. No solvents or other cleaning materials are used. To determine the coefficient of friction for the wet platform section pull the test block, with the test rubber attached, by machine at a rate of 20 ± 2mm/s. The machine and test block are rigidly linked by a device that exhibits a stiffness greater than or equal to 1×10^5 N/m. Pull the test block for a minimum of 13 seconds. Record the pulling force over the final 10 seconds of the test at a minimum frequency of 10 Hz. Repeat the test at least 5 times on any one area of the platform surface, in a single direction. Calculate the average pulling force for each trial, F_1 through F_n, where n is the number of trials. Measure the weight of the test block with the force gauge and call it F_b. Calculate the coefficient of friction, μ_p, from the following equation:

$$\mu_p = \frac{F_1 + F_2 + F_3 + \ldots F_n}{n \times F_b}$$

S7.3 *Environmental resistance test.*

S7.3.1 Perform the procedures specified in S7.3.2 through S7.3.5 to determine compliance with S6.3.

S7.3.2 Attachment hardware, as specified in S6.3.1, and externally mounted platform lifts or components, as specified in S6.3.2, are tested in accordance with ASTM B117–97. Any surface coating or material not intended for permanent retention on the metal parts during service life are removed prior to testing. Except as specified in S7.3.3, the period of the test is 50 hours, consisting of two periods of 24 hours exposure to salt spray followed by one hour drying.

S7.3.3 For attachment hardware located within the occupant compartment of the motor vehicle and not at or near the floor, the period of the test is 25 hours, consisting of one period of 24 hours exposure to salt spray followed by one hour drying.

S7.3.4 For performance of this test, externally mounted platform lifts or components may be installed on test jigs rather than on the vehicle. The lift is in a stowed position. The configuration of the test setup is such that areas of the lift that would be exposed to the outside environment during actual use are not protected from the salt spray by the test jig.

S7.3.5 At the end of the test, any surface exposed to the salt spray is washed thoroughly with water to remove the salt. After drying for at least 24 hours under laboratory conditions, the platform lift and components are examined for ferrous corrosion on significant surfaces, *i.e.*, all surfaces that can be contacted by a sphere 2 cm (0.79 in) in diameter.

S7.4 *Threshold warning signal test.*

S7.4.1 Determine compliance with S6.1.2 and S6.1.3 using the test procedure specified in S7.4.2.

S7.4.2 Maneuver the lift platform to the vehicle floor level loading position. Using the wheelchair test device specified in S7.1.2, place one front wheel of the unloaded wheelchair test device on any portion of the threshold area defined in S4. Move the platform down until the alarm is actuated. Remove the test wheelchair wheel from the threshold area to deactivate the alarm. Measure the vertical distance between the platform and the threshold area and determine whether that distance is greater than 25 mm (1 in).

S7.5 *Test to determine occupancy of outer barrier and interlock function.*

S7.5.1 Determine compliance with S6.10.2.5 and S6.10.2.6 using the test procedure in S7.5.2 and S7.5.3.

S7.5.2 Maneuver the platform to the ground level loading position. Locate the wheelchair test device specified in S7.1.2 on the platform. Using the lift control, move the lift up until the outer barrier starts to deploy. Stop the platform and measure the distance between the ground and the upper platform surface and determine whether the distance is greater than 75 mm (3 in).

S7.5.3 Place one front wheel of the wheelchair test device on any portion of the outer barrier. If the platform is too small to maneuver one front wheel on the outer barrier, two front wheels may be placed on the barrier. Using the lift control, attempt to move the platform up. If further upward movement occurs, move the platform up until it stops and determine whether the outer barrier has deployed and caused upward movement of the wheelchair wheel(s) of more than 13 mm (0.5 in).

S7.6 *Test to determine occupancy of inner roll stop and interlock function.*

S7.6.1 Determine compliance with S6.10.2.4 and S6.10.2.7 using the test procedure in S7.6.2 and S7.6.3.

S7.6.2 Maneuver the platform to the vehicle floor level loading position, and position the wheelchair test device specified in S7.1.2 on the platform with the rear wheels facing away from the vehicle. Using the lift control, move the platform down until the inner roll stop starts to deploy. Stop the lift and note that location.

S7.6.3 Reposition the platform at the vehicle floor level loading position. Place one front wheel of the wheelchair test device on the inner roll stop, or along the innermost edge of the platform if the inner roll stop is not accessible. If the platform is too small to maneuver one front wheel on the inner roll stop, two front wheels may be placed on the inner roll stop. Using the lift control, move the platform down until the inner roll stop starts to deploy. Determine whether the platform has stopped and whether the inner roll stop has deployed, causing upward movement of the wheelchair wheel(s) of more than 13 mm (0.5 in).

S7.7 *Wheelchair retention device impact test.*

S7.7.1 Determine compliance with S6.4.7.1 and S6.4.7.2 using the test device specified in S7.1.2, under the procedures specified in S7.7.2 and S7.7.3.

S7.7.2 Conduct the test in accordance with the procedures in S7.7.2.1 through S7.7.2.5 to determine compliance with S6.4.7.1. In the case of private use lifts, perform both S7.7.2.5(a) and (b), unless the operating directions specify a required direction of wheelchair movement onto the platform. When a direction is indicated in the operating instructions, perform the procedure specified in S7.7.2.5(a) or (b) with the test device oriented as required by the operating instructions.

S7.7.2.1 Place the lift platform at the vehicle floor loading position.

S7.7.2.2 If the wheelchair retention device is an outer barrier, the footrests are adjusted such that at their lowest point they have a height 25 mm ± 2 mm (1 in ± 0.08 in) less than the outer barrier. If the wheelchair retention device is not an outer barrier, the footrests are adjusted such that at their lowest point they have a height 501 mm ± 2 mm (2 in ± 0.08 in) above the platform.

S7.7.2.3 Position the test device with its plane of symmetry coincident with the lift reference plane and at a distance from the platform sufficient to

achieve the impact velocities required by S7.7.2.5.

S7.7.2.4 Accelerate the test device onto the platform under its own power such that the test device impacts the wheelchair retention device at each speed, direction, and load condition combination specified in S7.7.2.5. Maintain power to the drive motors until all wheelchair motion has ceased except rotation of the drive wheels. Cut power to the drive motors. Note the position of the wheelchair after its motion has ceased following each impact to determine compliance with S6.4.7. If necessary, after each impact, adjust or replace the footrests to restore them to their original condition.

S7.7.2.5 The test device is operated at the following speeds, in the following directions—

(a) At a speed of not less than 2.0 m/s (4.4 mph) and not more than 2.1 m/s (4.7 mph), forward, with a load of 0 kg (0 lbs).

(b) At a speed of not less than 1.75 m/s (3.9 mph) and not more than 1.85 m/s (4.1 mph), rearward, with a load of 0 kg (0 lbs).

S7.7.3 *Rotary platform lifts:* For rotary platform lifts, conduct the test under the procedures in S7.7.3.3 through S7.7.3.7 to determine compliance with S6.4.7.2.

S7.7.3.1 *Public use lifts:* For public use lifts, perform the test in both possible test device orientations.

S7.7.3.2 *Private use lifts:* For private use lifts, perform the test in both possible test device orientations unless a required direction of wheelchair movement onto the platform is indicated in the operating instructions. If a required direction is indicated in the operating instructions, perform the test with the test device oriented as required by the operating instructions.

S7.7.3.3 Adjust the footrests of the test device to the shortest length. Place the test device on the platform with its plane of symmetry coincident with the lift reference plane.

S7.7.3.4 Position the platform surface 90 mm ± 10 mm (3.5 inches ± 0.4 inches) above the ground level position.

S7.7.3.5 Slowly move the test device in the forward direction until it contacts a wheelchair retention device. Activate the controller of the test device such that, if the test device were unloaded and unrestrained on a flat, level surface, it would achieve a maximum forward velocity of not less than 2.0 m/s (4.4 mph) and not more than 2.1 m/s (4.7 mph).

S7.7.3.6 Realign the test device on the platform so that its plane of symmetry is coincident with the lift reference plane. Slowly move the test device in the rearward direction until it contacts a wheelchair retention device. Activate the controller of the test device such that, if the test device were unloaded and unrestrained on a flat, level surface, it would achieve a maximum rearward velocity of not less than 1.75 m/s (3.9 mph) and not more than 1.85 m/s (4.1 mph).

S7.7.3.7 During the impacts specified in S7.7.3.5 and S7.7.3.6, maintain power to the drive motors until all test device motion has ceased except rotation of the drive wheels. Note the position of the test device after its motion has ceased following each impact to determine compliance with S6.4.7.2.

S7.8 *Inner roll stop test.* Determine compliance with S6.4.8 using the test device specified in S7.1.2 in accordance with the procedures specified in S7.8.1 through S7.8.6.

S7.8.1 Place the platform at the ground level loading position, such that the platform is level.

S7.8.2 Adjust the footrests of the test device to the shortest length. Position the test device on the ground at a distance from the platform sufficient to achieve the impact velocity required by S7.8.3. The plane of symmetry of the test device is coincident with the lift reference plane and the forward direction of travel is onto the platform.

S7.8.3 Accelerate the test device onto the platform such that it impacts the inner roll stop at a speed of not less than 1.5 m/s (3.4 mph) and not more than 1.6 m/s (3.6 mph). Determine compliance with S6.4.8.3(a).

S7.8.4 If necessary, adjust or replace the footrests to restore them to the condition they were in prior to the impact. Reposition the test device on the platform with its plane of symmetry coincident with the lift reference plane. Slowly move the test device in the forward direction until it contacts the inner roll stop.

S7.8.5 Apply a static load to the inner roll stop by activating the controller of the test device such that, with the test device were unrestrained on a flat and level surface, it achieves a maximum forward velocity of not less than 2.0 m/s and not more than 2.1 m/s.

S7.8.6 Maintain control activation and raise the platform to the vehicle loading position. Determine compliance with S6.4.8.3(b).

S7.9 *Static load test I—working load.*

S7.9.1 By use of the lift controls specified in S6.7.2, perform the operations specified in S7.9.2 through S7.9.8 in the order they are specified.

S7.9.2 Place the platform in the stowed position.

S7.9.3 Deploy the platform to the vehicle floor loading position. Center a standard load, including the test pallet, on the platform surface.

S7.9.4 Lower the lift platform from the vehicle floor loading position to the ground level loading position, stopping once between the two positions. Remove the test pallet from the lift platform.

S7.9.5 Raise the lift platform from the ground level loading position to the vehicle floor level loading position, stopping once between the two positions.

S7.9.6 Lower the lift platform from the vehicle floor level loading position to the ground level loading position, stopping once between the two positions.

S7.9.7 Center the loaded test pallet on the platform surface. Raise the lift platform from the ground level loading position to the vehicle floor loading position, stopping once between the two positions.

S7.9.8 Remove the pallet from the lift platform. Stow the lift.

S7.9.9 Turn power off to the lift and repeat S7.9.3 through S7.9.5 and stow the lift using the backup operating mode as specified by S6.9 in accordance with the manufacturer's backup operating instructions.

S7.10 *Fatigue endurance test.*

S7.10.1 Perform the test procedure specified in S7.10.2 through S7.10.6 and determine compliance with S6.5.1.

S7.10.2 Put the unloaded lift platform at the ground level loading position. Center a standard load, including the test pallet, on the platform surface.

S7.10.3 Each sequence of lift operations specified in S7.10.5.1, S7.10.5.2, S7.10.6.1 and S7.10.6.2 are done in blocks of 10 cycles with a 1 minute maximum rest period between each cycle in any block. The minimum rest period between each block of 10 cycles is such that the temperature of the lift components is maintained below the values specified by the manufacturer or that degrade the lift function.

S7.10.4 During the test sequence specified in S7.10.2 through S7.10.6, perform any lift maintenance as specified in the vehicle owner's manual.

S7.10.5 *Public use lifts:* Using the lift controls specified in S6.7.2, perform the operations specified in S7.10.5.1 through S7.10.5.3 in the order they are given.

S7.10.5.1 Raise and lower the platform through the range of passenger operation 3,900 times.

S7.10.5.2 Remove the test pallet from the platform. Raise the platform to the vehicle floor loading position, stow the lift, deploy the lift and lower the platform to the ground level loading position 3,900 times.

S7.10.5.3 Perform the test sequence specified in S7.10.5.1 and S7.10.5.2 two times.

S7.10.6 *Private use lifts:* Using the lift controls specified in S6.7.2, perform the operation specified in S7.10.6.1 through S7.10.6.3 in the order they are given.

S7.10.6.1 Raise and lower the platform through the range of passenger operation 1,100 times.

S7.10.6.2 Remove the test pallet from the platform. Raise the platform to the vehicle floor loading position, stow the lift, deploy the lift and lower the platform to the ground level loading position 1,100 times.

S7.10.6.3 Perform the test sequence specified in S7.10.6.1 and S7.10.6.2 two times.

S7.11 *Static load test II—proof load.*

S7.11.1 Perform the test procedures specified in S7.11.2 through S7.11.5 and determine compliance with S6.5.2.

S7.11.2 Place the platform at the vehicle floor level loading position, center three times the standard load, including the test pallet, on the platform surface. Fully place the pallet on the platform within 1 minute of beginning to place it.

S7.11.3 Two minutes after fully placing the loaded test pallet on the platform surface, remove the loaded test pallet and examine the platform lift and vehicle for separation, fracture or breakage.

S7.11.4 After completing the static load test specified in S7.11.2 through S7.11.4, repeat Static Load Test I specified in S7.9.

S7.12 *Handrail test.*

S7.12.1 To determine compliance with S6.4.9.7, apply 4.4 N (1 lbf) through an area of 1290 mm ^{2} (2 in^2) in any direction at any point on the handrail in order to remove any looseness or slack from the handrail structure. Use this position of the handrail relative to the platform as the reference point for the measurement of handrail displacement. Apply 445 N (100 lbf) through an area of 1290 mm^2 (2 in^2) in a direction and location opposite to that of the 4.4 N (1 lbf). Attain the force within 1 minute after beginning to apply it. Five seconds after attaining the force, measure the amount of displacement of the handrail relative to the reference point, and measure the distance between the outside of the handrail and the nearest portion of the vehicle. Release the 445 N (100 lbf) and reapply the 4.4 N (1 lbf) in the direction and location that it was first applied. Five seconds after attaining the force, measure the position of the handrail with respect to the reference point to determine if there is any permanent deformation of the handrail relative to the platform.

S7.12.2 To determine compliance with S6.4.9.8, apply 4.4 N (1 lbf) through an area of 1,290 mm^2 (2 in^2) in any direction at any point on the handrail in order to remove any looseness or slack from the handrail structure. Use this position of the handrail relative to the platform as the reference point for the measurement of handrail displacement. Apply 1,112 N (250 lbf) through an area of 1,290 mm^2 (2 in^2) in a direction and location opposite to that of the 1 4.4 N (1 lbf). Attain the force within 1 minute after beginning to apply it. Five seconds after attaining the force, measure the amount of displacement of the handrail relative to the reference point. Maintain the force for two minutes. Release the force and inspect the handrail for cracking, separations or fractures.

S7.13 *Wheelchair retention device overload test.*

S7.13.1 Perform the test procedures as specified in S7.13.2 through S7.13.5 to determine compliance with S6.4.7.3.

S7.13.2 Position the platform surface 89 mm (3.5 in) above the ground level loading position. Apply 7,117 N (1,600 lbf) to the wheelchair retention device in a direction parallel to both the platform lift and platform reference planes. Attain the force within 1 minute after beginning to apply it.

S7.13.3 For a wheelchair retention device that is in the form of an outer barrier, apply the force through a rectangular area with a height of 25 mm (1 in) and a width spanning the entire barrier. Distribute the force evenly about an axis 64 mm (2.5 in) above the platform reference plane. If the bottom edge of the outer barrier falls 50 mm (2 in) or more above the platform reference plane, distribute the force about an axis 13 mm (0.5 in) above the bottom edge of the barrier.

S7.13.4 For a wheelchair retention device other than an outer barrier, place the test device specified in S7.1.2 on the lift platform with its plane of symmetry coincident with the lift reference plane and directed such that forward motion is impeded by the wheelchair retention device. Move the test device forward until it contacts the wheelchair retention device. Remove the test device from the platform. Apply the force specified in S7.13.2 distributed evenly at all areas of the wheelchair retention device that made contact with the test device when it was moved forward. Attain the force within 1 minute after beginning to apply it.

S7.13.5 After maintaining the force for two minutes, remove it and examine the wheelchair retention device for separation, fracture or breakage.

S7.14 *Static load test III—ultimate load.*

S7.14.1 Perform the test procedures as specified in S7.14.2 through S7.14.5 to determine compliance with S6.5.3.

S7.14.2 Reinforce the vehicle structure where the lift is attached such that it is rigid and will not deform, break or separate during application of the load specified in S7.14.3 or remove the platform lift from the vehicle and install it on a test jig that is rigid and will not deform, break or separate during application of the load specified in S7.14.3.

S7.14.3 When the platform is at the vehicle floor loading position, center four times the standard load, including the test pallet, on the platform surface. Fully place the pallet on the platform within 1 minute of beginning to place it.

S7.14.4 Two minutes after fully placing the loaded test pallet on the platform surface, remove the loaded test pallet and examine the platform lift for separation, fracture or breakage.

[BILLING CODE]4910–59–P

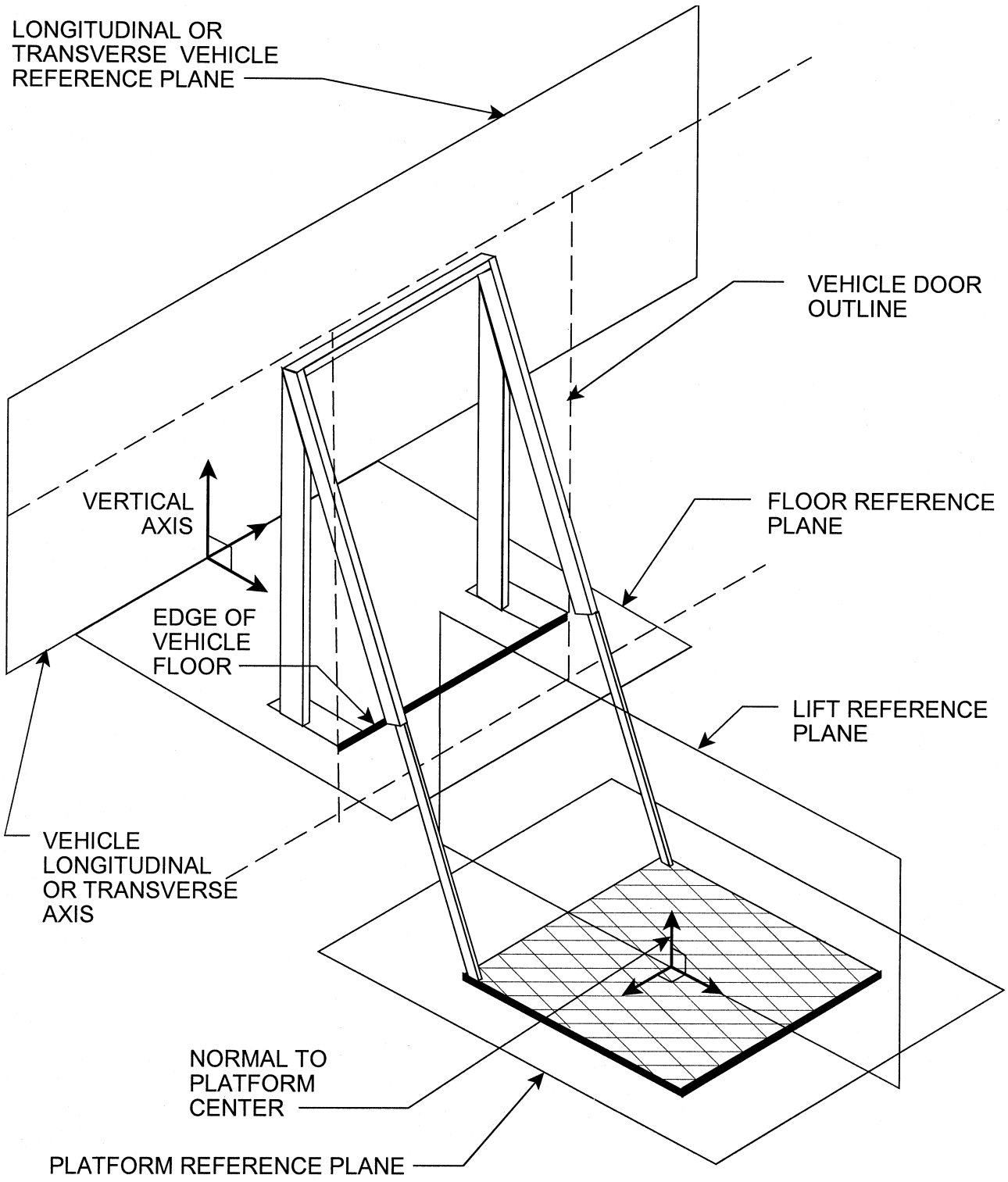

PLANES OF REFERENCE

FIGURE 1

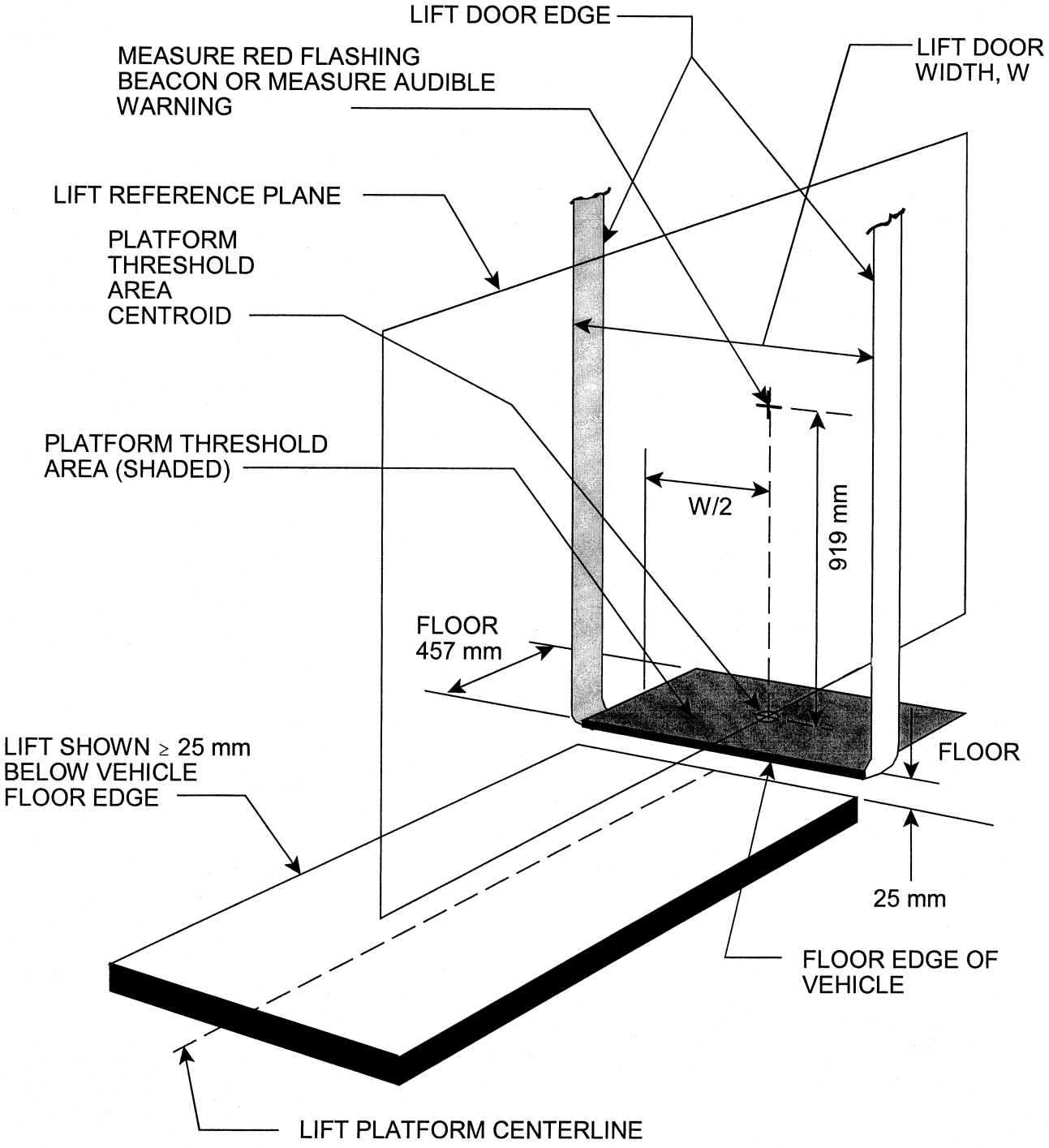

PLATFORM THRESHOLD AREA AUDIBLE WARNING MEASUREMENT POINT

FIGURE 2

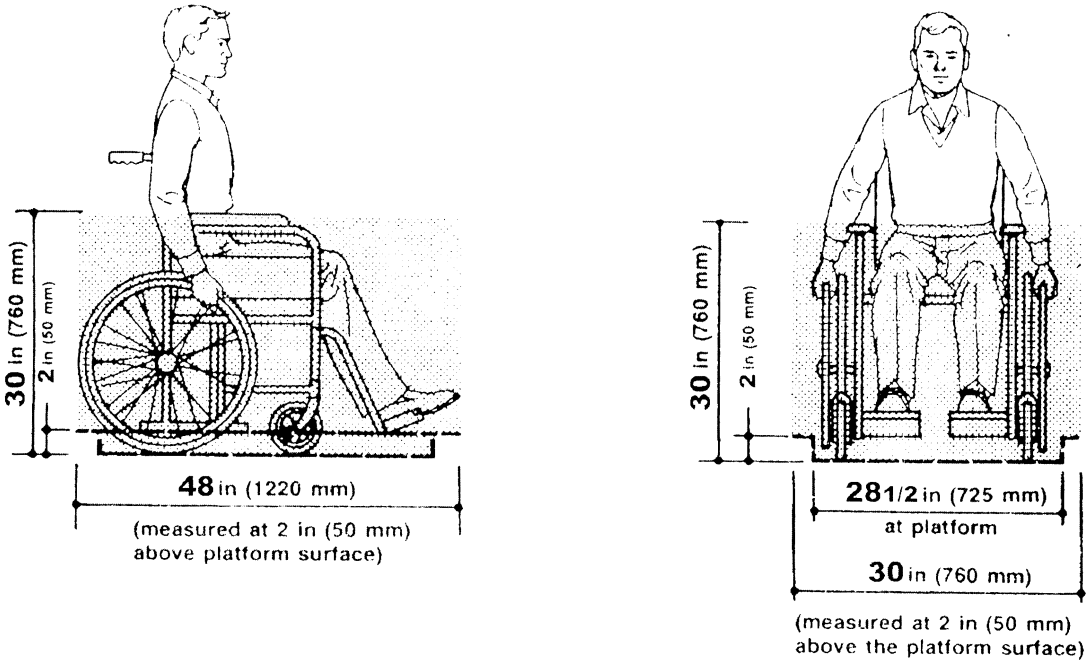

Minimum Unobstructed Platform Operating Volume for Public Use Lifts

Figure 3

BILLING CODE 4910–59–C

8. Section 571.404 is added to read as follows:

§ 571.404 Standard No. 404; Platform lift installations in motor vehicles.

S1. *Scope.* This standard specifies requirements for vehicles equipped with platform lifts used to assist persons with limited mobility in entering or leaving a vehicle.

S2. *Purpose.* The purpose of this standard is to prevent injuries and fatalities to passengers and bystanders during the operation of platform lifts installed in motor vehicles.

S3. *Application.* This standard applies to motor vehicles equipped with a platform lift to carry passengers into and out of the vehicle.

S4. *Requirements.*

S4.1 *Installation requirements.*

S4.1.1 Lift-equipped buses, school buses, and MPVs other than motor homes with a GVWR greater than 4,536 kg (10,000 lb) must be equipped with a public use lift certified as meeting Federal Motor Vehicle Safety Standard No. 403, Lift Systems for Motor Vehicles (49 CFR 571.403).

S4.1.2 Lift-equipped motor vehicles, other than ones subject to paragraph S4.1.1, must be equipped with a platform lift certified as meeting either the public use lift or private use lift requirements of Federal Motor Vehicle Safety Standard No. 403, Lift Systems for Motor Vehicles (49 CFR 571.403).

S4.1.3 Platform lifts must be installed in the vehicle in accordance with the installation instructions or procedures provided pursuant to S6.13 of Standard 403. The vehicle must be of a type identified in the installation instructions as appropriate for the platform lift as certified by the platform lift manufacturer.

S4.1.4 The platform lift, as installed, must continue to comply with all the applicable requirements of Federal Motor Vehicle Safety Standard No. 403, Lift Systems for Motor Vehicles (49 CFR 571.403).

S4.2 *Vehicle owner's manual insert requirements.* If the vehicle is equipped with an owner's manual, the owner's manual must contain the inserts provided by the lift manufacturer pursuant to S6.12 of 49 CFR 571.403.

S4.3 *Control system.*

S4.3.1 Instructions regarding the platform lift operating procedures, including backup operations, as specified by S6.7.8 of 49 CFR 571.403, must be permanently affixed to a location adjacent to the controls.

S4.3.2 *Public use lift*: In addition to meeting the requirements of S4.3.1, for vehicles equipped with public use lifts, as defined in 49 CFR 571.403, any and all controls provided for the lift by the platform lift manufacturer other than those provided for back-up operation of the platform lift specified in S5.9 of 49 CFR 571.403, must be located together and in a position such that the control operator has a direct, unobstructed view of the platform lift passenger and/or their mobility aid throughout the lift's range of passenger operation. Additional power controls and controls for back-up operation of the lift may be located in other positions.

Issued on: December 13, 2002.

Jeffrey W. Runge,

Administrator.

[FR Doc. 02–31891 Filed 12–26–02; 8:45 am]

BILLING CODE 4910–59–P

Federal Register

Friday,
December 27, 2002

Part V

Securities and Exchange Commission

17 CFR Part 240
Repeal of the Trade-Through Disclosure Rules for Options; Final Rule

SECURITIES AND EXCHANGE COMMISSION

17 CFR Part 240

[Release No. 34–47013; File No. S7–18–02]

RIN 3235–AI52

Repeal of the Trade-Through Disclosure Rules for Options

AGENCY: Securities and Exchange Commission.

ACTION: Final rule.

SUMMARY: The Securities and Exchange Commission (''Commission'') is repealing its options trade-through disclosure rule under the Securities Exchange Act of 1934, which requires a broker-dealer to disclose to a customer when the customer's order for listed options has been executed at a price inferior to a better published quote, unless the order was executed as part of a block trade or the transaction was affected on a market that participates in an intermarket options linkage plan featuring adequate trade-through protections. The Commission has determined that recent amendments to the Options Intermarket Linkage Plan have satisfied the regulatory goals that the options trade-through disclosure rule was designed to address, and is therefore repealing the rule as unnecessary.

EFFECTIVE DATE: December 27, 2002.

FOR FURTHER INFORMATION CONTACT: Deborah Flynn, Assistant Director, at (202) 942–0075, Patrick Joyce, Special Counsel, at (202) 942–0779, and Jennifer Lewis, Attorney, at (202) 942–7951, Division of Market Regulation, Securities and Exchange Commission, 450 Fifth Street, NW., Washington, DC 20549–1001.

SUPPLEMENTARY INFORMATION: We are proposing to repeal rule 11Ac1–7 under the Securities Exchange Act of 1934, the ''Trade-Through Disclosure Rule.''

Table of Contents

I. Repeal of the Trade-Through Disclosure Rule
A. Background
B. The Trade-Through Disclosure Rule
C. Amendments to the Linkage Plan
II. Discussion
III. Paperwork Reduction Act
IV. Administrative Procedure Act
V. Costs and Benefits of the Repeal of the Trade-Through Disclosure Rule
VI. Promotion of Efficiency, Competition and Capital Formation, and Consideration of the Burden on Competition
VII. Final Regulatory Flexibility Analysis
VIII. Statutory Authority

I. Repeal of the Trade-Through Disclosure Rule

A. Background

Section 11A of the Securities Exchange Act of 1934 (''Exchange Act'')[1] sets forth the findings of Congress with respect to the establishment of a national market system. Congress believed that linking all of the markets for qualified securities would improve efficiency, enhance competition, increase the information available to broker-dealers and investors, and contribute to the ''best execution'' of orders.[2] Recognizing that there were significant differences among the markets for various types of securities, Congress granted the Commission broad powers to implement a national market system without forcing all of the securities markets into a single mold.[3]

Many national market system initiatives were implemented in the equities markets at a time when standardized options trading was relatively new.[4] Therefore, the Commission deferred applying many of the national market system initiatives to options to give options trading an opportunity to develop. With the onset of widespread multiple trading in options, beginning in August 1999, the Commission became increasingly concerned about customer orders that are sent to one exchange being executed at prices inferior to quotes published by another market.

In October 1999, the Commission ordered the Options Exchanges to collaborate on a national market system plan for linking the options markets.[5] In July 2000, the Commission approved an Options Intermarket Linkage Plan (''Linkage Plan'') that the Amex, the CBOE, and the ISE had proposed.[6] The Commission did not mandate, however, that all of the Options Exchanges participate in the Linkage Plan. As discussed in the order approving the Linkage Plan, the Plan did not adequately address ''intermarket trade-throughs,'' which occur when broker-dealers execute customer orders at prices inferior to the quotes for the same options disseminated by other exchanges.[7]

B. The Trade-Through Disclosure Rule

In November 2000, in an effort to reduce intermarket trade-throughs in the options markets without mandating linkage, the Commission promulgated the Trade-Through Disclosure Rule, rule 11Ac1–7 under the Exchange Act.[8] The Trade-Through Disclosure Rule requires a broker-dealer to disclose to its customer when the customer's order for listed options has been executed at a price inferior to a better published quote, and to disclose the better published quote that was available at the time.[9] Significantly, however, a broker-dealer is not required to disclose this information to its customer if the transaction was effected on an exchange that participates in a Commission-approved linkage plan that includes provisions reasonably designed to limit trade-throughs of customer orders.[10]

[1] 15 U.S.C. 78k–1.

[2] Section 11A(a)(1)(D) of the Exchange Act, 15 U.S.C. 78k–1(a)(1)(D).

[3] *See* Senate Committee on Banking, Housing, and Urban Affairs, Report to Accompany S. 249, S. Rep. 94–75, 94th Cong., 1st Sess. 7 (1975); *see also* Committee of Conference, Report to Accompany S. 249, H.R. Rep. No. 94–229, 94th Cong., 1st Sess. 2 (1975).

[4] The trading of standardized options on securities exchanges began in 1973 with the organization of the Chicago Board Options Exchange (''CBOE'') as a national securities exchange. *See* Securities Exchange Act Release No. 9985 (February 1, 1973), 1 S.E.C. Doc. 11 (February 13, 1973). Currently, the CBOE, the American Stock Exchange (''Amex''), the International Securities Exchange (''ISE''), the Pacific Exchange (''PCX''), and the Philadelphia Stock Exchange (''Phlx'') (collectively, ''Options Exchanges'') are the only national securities exchanges that trade standardized options.

[5] Securities Exchange Act Release No. 42029 (October 19, 1999), 64 FR 57674 (October 26, 1999).

[6] Securities Exchange Act Release No. 43086 (July 28, 2000), 65 FR 48023 (August 4, 2000). The PCX and the Phlx later joined the Plan. *See* Securities Exchange Act Release Nos. 43310 (September 20, 2000), 65 FR 58583 (September 29, 2000) (approving an amendment to the Linkage Plan adding the PCX as a participant) and 43311 (September 20, 2000), 65 FR 58584 (September 29, 2000) (approving an amendment to the Linkage Plan adding the Phlx as a participant).

[7] *See* Securities Exchange Act Release No. 44482 (June 27, 2001), 66 FR 35470 (July 5, 2001).

[8] 17 CFR 240.11Ac1–7; *see* Securities Exchange Act Release No. 43085 (July 28, 2000), 65 FR 47918 (August 4, 2000) (''Proposing Release''); Securities Exchange Act Release No. 43591 (November 17, 2000), 65 FR 75439 (December 1, 2000) (''Adopting Release'').

[9] The broker-dealer must make this disclosure to the customer in writing, and may do so on the customer's confirmation statement. *See* Rule 11Ac1–7(b)(1) under the Exchange Act, 17 CFR 240.11Ac1–7(b)(1).

[10] Rule Ac1–7(b)(2)(i) under the Exchange Act, 17 CFR 240.11Ac1–7(b)(2)(i). The Linkage Plan that the Commission approved in July 2000 was not reasonably designed to limit trade-throughs of customer orders. In the Adopting Release, the Commission noted that to reasonably limit trade-throughs of customer orders, a linkage plan must, at a minimum: (1) Limit participants from trading through the quotes of all exchanges, including exchanges that are *not* participants in such plan; (2) require plan participants to conduct active surveillance of their markets for trades executed at prices inferior to those publicly quoted on other exchanges; and (3) make clear that the failure of a market with a better quote to complain within a specified period of time that its quote was traded through may affect potential liability, but does not signify that a trade through has not occurred. *See* Adopting Release, *supra* note 8. The Options Exchanges thereafter proposed an amendment to

The Commission recognized that the Linkage Plan would reasonably limit intermarket trade-throughs on each of the options markets only if the Options Exchanges remained participants in the Linkage Plan. If an exchange were to withdraw from the Linkage Plan, and did not participate in another linkage plan with provisions reasonably designed to limit intermarket trade-throughs on all exchanges, the Trade-Through Disclosure Rule would require broker-dealers effecting transactions on that exchange to provide their customers with information about intermarket trade-throughs.

C. Amendments to the Linkage Plan

The Options Exchanges proposed amendments to the Linkage Plan that would require any exchange wishing to withdraw from the Linkage Plan to first satisfy the Commission that it could achieve, by alternative means, the Linkage Plan's stated goal of limiting intermarket trade-throughs. The Commission approved the proposed amendments in May 2002.[11] At the same time, the Commission proposed to repeal the Trade-Through Disclosure Rule because it believed that, once the linkage is fully implemented, the amendments to the Linkage Plan will ensure that all options transactions are executed in markets that reasonably limit intermarket trade-throughs of customer orders.[12] Pending its consideration of the proposed repeal of the Trade-Through Disclosure Rule, the Commission also issued an Order exempting broker-dealers from compliance with the rule until January 1, 2003.[13]

II. Discussion

In proposing the Trade-Through Disclosure Rule in 2000, the Commission expressed the view that the rule's contingent disclosure requirement would create an incentive for the options markets to develop effective means to access other markets, remove barriers to better prices, and limit the incidence of intermarket trade-throughs.[14] Several interested parties commented on the merits of the proposal. Notably, the Securities Industry Association (''SIA'') argued that the Commission and the options industry should focus not on the after-the-fact disclosure of trade-throughs to investors, but on preventing intermarket trade-throughs by the implementation of an effective Linkage Plan.[15] In the Adopting Release, the Commission noted that it intended the Trade-Through Disclosure Rule to encourage the options markets to participate in a Commission-approved intermarket linkage plan, but also expressed the belief that broker-dealers would develop effective means of accessing the better-published quotes of other markets and thereby avoid intermarket trade throughs.[16]

After the Trade-Through Disclosure Rule became effective in February 2001, the SIA and other market participants requested that the Commission extend the Trade-Through Disclosure Rule's compliance date beyond the original deadline of April 2001.[17] In particular, the SIA argued that the Trade-Through Disclosure Rule would impose on broker-dealers a costly regulatory burden of disclosure that would become obsolete once the Options Exchanges became linked by the Linkage Plan.[18] In response to the industry's concerns, and pending the Options Exchanges' full implementation of an adequate Linkage Plan, the Commission extended the rule's compliance date and later temporarily exempted broker-dealers from compliance with the rule.[19]

The Commission solicited comment from the public with respect to the proposal to repeal the Trade-Through Disclosure Rule. In particular, the Commission sought public comment on: (1) Whether the amended Linkage Plan[20] adequately addresses concerns with respect to intermarket trade-throughs; (2) whether repeal of the Trade-Through Disclosure Rule was appropriate in the light of the amended Linkage Plan; and (3) whether an approach other than the repeal of the Trade-Through Disclosure Rule would be more appropriate.

Two market participants opposed the proposal.[21] One, a market maker on the PCX, expressed the view that the proposed repeal of the Trade-through Disclosure Rule would serve only to help large investment houses and broker-dealers justify trade-throughs.[22] In particular, the market maker argued that internalization of order flow, ''front running,'' and other conflicts of interest allow orders to circumvent the competitive trading environment, thereby compromising order executions to the detriment of the public interest. This commenter was concerned that the proposed repeal of the Trade-Through Disclosure Rule would allow ''more gaming'' by brokerages and order flow providers and give those firms ''a means to justify their actions.''[23]

Another market participant described his concerns about trade-throughs in the context of current automatic execution practices in the options industry.[24] This commenter argued that several of the Options Exchanges do not honor their own posted quotes with automatic executions, which causes trade-throughs to occur on a regular basis. In his view, many trade-throughs would be eliminated if the five Options Exchanges were ''forced to honor their posed quotes with auto executions.''[25]

The Commission has carefully considered the concerns raised in the comment letters. In the Commission's

the Linkage Plan that incorporated improvements consistent with the Commission's guidance, and the Commission approved the amended Linkage Plan in June 20001. *See* Securities Exchange Act Release No. 44482 (June 27, 2001), 66 FR 35470 (July 5, 2001).

[11] *See* Securities Exchange Act Release No. 46001 (May 30, 2002), 67 FR 38687 (June 5, 2002) (Order approving Amendments Nos. 2 and 3).

[12] Securities Exchange Act Release 46002 (May 30, 2002), 67 FR 38610 (June 5, 2002) (''Release Proposing Repeal''). The Linkage Plan is being implemented in two phases. The first phase, which includes the elements of linkage that are necessary for automatic execution, will be implemented by February 1, 2003. The second phase, which includes all other elements of the linkage, will be implemented by no later than April 30, 2003. *See* Securities Exchange Act Release No. 46001 (May 30, 2002), 67 FR 38687 (June 5, 2002).

[13] Securities Exchange Act Release No. 46003 (May 30, 2002), 67 FR 38689 (June 5, 2002).

[14] *See* Proposing Release, 65 FR at 47919–20.

[15] *See* letter from William McGowen, Chairman, Options Committee, SIA, to Jonathan G. Katz, Secretary, Commission, dated October 31, 2000.

[16] *See* Adopting Release, 65 FR at 75443–45.

[17] *See* letter from Mark E. Lackritz, President, SIA, to Annette Nazareth, Director, Division of Market Regulation, Commission, dated February 20, 2001.

[18] *Id.*

[19] At the request of broker-dealers and others, the Commission extended the compliance date from April 1, 2001, to April 1, 2002. *See* Securities Exchange Act Release Nos. 44078 (March 15, 2001), 66 FR 15792 (March 21, 2001) (extending compliance date to October 1, 2001) and 44852 (September 26, 2001), 66 FR 50103 (October 2, 2001) (extending compliance date to April 1, 2002). The Commission thereafter temporarily exempted broker-dealers from compliance with the trade-Through Disclosure Rule until January 1, 2003. *See* Securities Exchange Act Release Nos. 45654 (March 27, 2002), 67 FR 15637 (April 2, 2002) (Order granting exemption for broker-dealers until July 1, 2002) and 46003 (May 30, 2002), 67 FR 38689 (June 5, 2002) (Order granting exemption for broker-dealers until January 1, 2003).

[20] As noted above, the Linkage Plan was amended to ensure that any exchange wishing to withdraw from the Plan must satisfy the Commission that it will otherwise achieve the Plan's stated goal of limiting intermarket trade-throughs. *See supra* note 11.

[21] A third comment letter, misaddressed to File No. S7–18–02, raised concerns about executive compensation and other matters that are not relevant to the proposed repeal of the Trade-Through Disclosure Rule. *See* e-mail from *CathyCyrus@aol.com* to *Rule-comments@SEC. gov* dated July 9, 2002.

[22] Letter from Mark A. Buffington of Phoenix Capital, LLC, to Jonathan G. Katz, Secretary, Commission, dated June 26, 2002.

[23] *Id.*

[24] Letter from Mike Ianni to Jonathan G. Katz, Secretary, Commission, dated July 21, 2002.

[25] *Id.*

view, retention of the Trade-Through Disclosure Rule would not address the concerns with respect to the operation of the options markets expressed in both comment letters. The Commission notes that the Linkage Plan, and not the Trade-Through Disclosure Rule, imposes trade-through restrictions with respect to the trading of options on the five Options Exchanges. Significantly, the Linkage Plan's trade-through protections would not be affected if the Trade-Through Disclosure Rule were repealed. Therefore, the Commission believes that useful comments on the topics of internalization and auto execution would be more properly directed to other marketplace initiatives related to order execution quality.

Accordingly, the Commission believes that, because the amended Linkage Plan [26] now contains provisions designed to reasonably limit intermarket trade-throughs on each of the Options Exchanges, and an exchange cannot withdraw from the Linkage Plan unless it can accomplish, by alternative means, the same goals as the Linkage Plan of limiting intermarket trade-throughs, the Trade-Through Disclosure Rule is no longer necessary and should be repealed. Therefore, the Commission hereby repeals the Trade-Through Disclosure Rule, Rule 11Ac1–7 under the Exchange Act.[27]

III. Paperwork Reduction Act

The Paperwork Reduction Act of 1995 (''PRA'') [28] requires the agency to obtain approval from the Office of Management and Budget (''OMG'') if an agency's rule would require a ''collection of information,'' as defined by the PRA.[29] The PRA does not apply in this instance because the repeal of the Trade-Through Disclosure Rule would not impose recordkeeping or information collection requirements, or other collections of information that require the approval of OMB under the PRA. When the Commission adopted the Trade-Through Disclosure Rule, it estimated that broker-dealers complying with the Trade-Through Disclosure Rule would incur one-time paperwork costs of between $8,250,000 and $16,500,000, and that the total continuing paperwork burden of the disclosures required to be made by brokers would be ''nominal'' because it would merely require a small amount of additional information on customer confirmation statements. At the request of broker-dealers, the Commission extended the initial compliance date of the Trade-Through Disclosure Rule form April 1, 2001, to April 1, 2002, and thereafter temporarily exempted broker-dealers from compliance with the rule until January 1, 2003.[30] As a result, the Commission understands that no broker-dealer has incurred any significant costs in connection with the Trade-Through Disclosure Rule. Because the Commission is repealing the Trade-Through Disclosure Rule, broker-dealers will completely avoid the costs of collecting and disseminating information required by the rule.

IV. Administrative Procedure Act

Section 553(d) of the Administrative Procedure Act [31] generally requires that an agency publish an adopted rule in the **Federal Register** 30 days before it becomes effective. However, this requirement does not apply if the rule grants or recognizes an exemption or relieves a restriction.[32] The Commission finds that the repeal of rule 11 Ac1–7, the Trade-Through Disclosure Rule, relieves a restriction. As discussed above, the amendments to the Linkage Plan, recently approved by the Commission, require any exchange wishing to withdraw from the Linkage Plan to first satisfy the Commission that it would achieve, by alternate means, the Linkage Plan's stated goal of limiting intermarket trade-throughs. Because the Linkage Plan, as amended, is designed to achieve the same goals as the Trade-Through Disclosure Rule, the repeal of the Trade-Through Disclosure Rule will eliminate an agency rule rendered unnecessary, thereby relieving broker-dealers of the requirements of the Rule. Therefore, the Commission finds that the Trade-Through Disclosure Rule may be repealed without a delayed effective date.

V. Costs and Benefits of the Repeal of the Trade-Through Disclosure Rule

As discussed more fully in part II, above, the Trade-Through Disclosure Rule requires a broker-dealer to disclose to its customer when the customer's order for listed options has been executed at a price inferior to a better published quote, unless the transaction was effected on an exchange that participates in a Commission-approved linkage plan that includes provisions reasonably designed to limit trade-throughs of customer orders. As recently amended, the Linkage Plan should now adequately limit intermarket trade-throughs, and the Options Exchanges cannot withdraw from the Linkage Plan unless they can achieve, by other means, the Linkage Plan's stated goal of limiting intermarket trade-throughts. Therefore, once the Options Exchanges have fully implemented the Linkage Plan, every transaction in standardized option will occur on an exchange that has in place adequate intermarket trade-through provisions. The Commissions is therefore repealing the Trade-Through Disclosure Rule as unnecessary.

To assist the Commission in its evaluation of the costs and benefits that may result from the repeal of the Trade-Through Disclosure Rule, commenters were requested to provide comment on the costs and effects on investors of the repeal of the Rule.

A. Costs

As noted above, a PCX market maker expressed the view that the proposed repeal of the Trade-Through Disclosure Rule would help large investment houses and broker-dealers justify trade-throughts.[33] In the Commission's view, the retention of the Trade-Through Disclosure Rule would not address the PCX market maker's concerns. The Commission believes this commenter incorrectly assumed that the Trade-Through Disclosure Rule requires broker-dealers to disclose intermarket trade-throughs in listed options despite the exchange's participation in the amended Linkage Plan. On the contrary, as all five national Options Exchanges are parties to the amended Linkage Plan, the Trade-Through Disclosure Rule would impose no obligations on broker-dealers to disclose an intermarket trade-through if the transaction if effected on any Options Exchange.

The Commission notes that, by operation of four Commission Orders, broker-dealers have never been required to comply with the Trade-Through Disclosure Rule.[34] Moreover, as all broker-dealer trading listed options would qualify for the Trade-Through Disclosure Rule's exemption from the disclosure requirement once the Linkage Plan is fully implemented, the Trade-Through Disclosure Rule would not impose any disclosure obligation on broker-dealers even if the rule were retained. Accordingly, the Commission believes that the Linkage Plan adequately ensures trade-through protections, and that repealing the

[26] Each self-regulatory organization that is a participant in an effective national market system plan is required to, ''absent reasonable justification or excuse, enforce compliance with any such plan by its members and persons associated with its members.'' *See* Exchange Act Rule 11 Ac3–2(d).

[27] 15 U.S.C. 78k–1.

[28] 44 U.S.C. 3501 *et seq.*

[29] *See* 44 U.S.C. 3502(3); 5 CFR 1320.3(c).

[30] *See supra* note 19.

[31] 5 U.S.C. 553(d).

[32] 5 U.S.C. 553(d)(1)

[33] *See supra* note 22.

[34] *See supra* note 19.

Trade-Through Disclosure Rule does not impose any costs on investors.

B. Benefits

As noted above, the SIA has commented that the Trade-Through Disclosure Rule would impose on broker-dealers a contingent, but costly, regulatory burden of the disclosure that would effectively be lifted once the Options Exchanges became linked through the Linkage Plan.[35] The repeal of the Trade-Through Disclosure Rule eliminates the possibility that broker-dealers will incur the initial costs of compliance, such as the one-time cost of modifying their existing systems to determine when trade-through have occurred. The repeal of the Trade-Through Disclosure Rule eliminates the potential costs of compliance with the rule and ensures that those costs will not be imposed in the future. Furthermore, when the rule was adopted to reduce the incidence of intermarket trade-throughs and the costs to investors associated with such trade-throughs, the repeal of the Rule should have no effect on investors because the amended Linkage Plan, when fully implemented, should limit intermarket trade-throughs, thereby achieving the same goal as the rule.

VI. Promotion of Efficiency, Competition and Capital Formation, and Consideration of the Burden on Competition

Section 3(f) of the Exchange Act provides that the Commission, when engaging in rulemaking that requires it to consider or determine whether an action is necessary or appropriate in the public interest, must consider whether the action will promote efficiency, competition, and capital formation.[36] In the Proposing Release, the Commission noted that the Trade-Through Disclosure Rule was adopted to encourage the Options Exchanges to develop mechanisms to reduce trade-throughs.[37] The Commission has approved an amendment to the Linkage Plan that requires any exchange wishing to withdraw from the Linkage Plan to first satisfy the Commission that it would achieve, by alternative means, the Linkage Plan's stated goal of limiting intermarket trade-throughs.[38] The Linkage Plan, as amended, is designed to achieve the same goals as the Trade-Through Disclosure Rule, and therefore the Commission is repealing the Trade-Through Disclosure Rule as unnecessary. The Commission has considered whether the repeal of the Trade-Through Disclosure Rule will promote efficiency, competition, and capital formation and does not believe that repeal of the Trade-Through Disclosure Rule will have a detrimental effect on efficiency, competition, and capital formation. We reach this conclusion because the repeal of the Trade-Through Disclosure Rule will apply equally to all market participants. Furthermore, because the Linkage Plan is designed to achieve the same goals as the Trade-Through Disclosure Rule, another mechanism will be in place to limit intermarket trade-throughs.

In addition, Section 23(a) of the Exchange Act requires the Commission, when adopting rules under the Exchange Act, to consider the anti-competitive effects of any rule it adopted.[39] In the Proposing Release, the Commission noted that because the repeal of the Trade-Through Disclosure Rule would apply equally to all relevant market participants, the Commission preliminarily believed that the proposal would not have any anti-competition effects.[40] The Commission did, however, request comment on any anti-competitive effects on the proposal.[41] The Commission did not receive any comments regarding the competitive impact of the repeal of the Trade-Through Disclosure Rule.

The repeal of the Trade-Through Disclosure Rule applies equally to each options market and other relevant option market participants. Thus, the Commission believes that the repeal of the Trade-Through Disclosure Rule will not have an anti-competitive impact on the options markets.

VII. Final Regulatory Flexibility Analysis

This Final Regulatory Flexibility Analysis (''FRFA'') has been prepared in accordance with the Regulatory Flexibility Act.[42] It relates to the repeal of rule 11Ac1–7 under the Exchange Act. An Initial Regulatory Analysis (''IRFA'') was prepared in accordance with 5 U.S.C. 603 and was made available to the public.[43] The Commission is repealing the Trade-Through Disclosure Rule as proposed.

The repeal of the Trade-Through Disclosure Rile, rule 11Acl–7, will eliminate the requirement that a broker-dealer disclose to its customer when a trade-through has occurred unless the trade was effected on a market that participates in an approved linkage plan that includes provisions reasonably designed to limit intermarket trade-throughs.

A. Reasons for the Action

The Trade-Through Disclosure Rule was implemented to provide an incentive to the Options Exchanges and their members to develop mechanisms to reduce the frequency of intermarket trade-throughs. Because the Options Exchanges have amended the Linkage Plan to restrict the ability of exchanges to withdraw from the Linkage Plan, absent an alternative means acceptable to the Commission by which the exchange can achieve the same goals as the Linkage Plan of limiting intermarket trade-throughs, the Commission believes that the Trade-Through Disclosure Rule is no longer necessary.

B. Objectives and Legal Basis

As noted above the repeal of the Trade-Through Disclosure Rule is intended to eliminate the requirement that broker-dealers disclose to a customer when the customer's order for listed options has been executed on an exchange without adequate trade-through protection mechanisms at a price inferior to a better published quote on other exchanges.

The Commission is repealing the Trade-Through Disclosure Rule under the authority set forth in Section 3(b), 15, 11A, 17, and 23(a) of the Exchange Act

C. Significant Issues Raised by Public Comment

As required by the Regulatory Flexibility Act,this section (i) summarizes the significant issues raised by public comments in response to the IRGA, (ii) summarizes the Commission's assessment of such issues, and (iii) states any changes made in the proposed rules as result of such comments.[44]

The Commission received no comments in response to the IRFA.

D. Small Entities Subject to the Rules

Commission rules generally define a broker-dealer as a small entity for purposes of the Exchange Act and the Regulatory Flexibility Act if the broker-dealer had a total capital (net worth plus subordinated liabilities) of less than $500,000 on the date in the prior fiscal year as of which its audited financial statements were prepared, and it is not affiliated with any person (other than a

[35] *See supra* note 17.

[36] 15 U.S.C. 78c(f).

[37] *See* Release Proposing Repeal, *supra* note 12.

[38] *See* Amendments Nos. 2 and 3, *supra* note 11.

[39] 15 U.S.C. 78w(a).

[40] *See* Release Proposing Repeal, *supra* note 12.

[41] *Id.*

[42] 5 U.S.C. 601.

[43] *See* Release Proposing Repeal, *supra* note 12.

[44] *See* 5 U.S.C. 604(a)(2).

natural person) that is not a small entity.[45]

Once the Trade-Through Disclosure Rule is repealed, no small entities will be subject to the Rule.

E. Reporting, Recordkeeping, and other Compliance Requirements

The Trade-Through Disclosure Rule requires a broker-dealer to disclose to its customer when its order has been executed at a price inferior to a published price on another exchange, unless the options trade is executed on an exchange that participates in an approved linkage plan that has rules reasonable designed to limit intermarket trade-throughs. The repeal of the Trade-Through Disclosure Rule eliminates this requirement

F. Duplicative, Overlapping, or Conflicting Federal Rules

The Commission believes there are no rules that duplicate, overlap, or conflict with the repeal of the Trade-Through Disclosure Rule

[45] 17 CFR 240.0–10(c)

G. Significant Alternatives

The Regulatory Flexibility Act directs the Commission to consider significant alternatives that would accomplish the stated objective, while minimizing any significant adverse impact on small entity issuers.

As discussed above, the repeal of the Trade-Through Disclosure Rule has no impact on small entities. The Commission has considered other alternatives and has decided that the repeal of the Trade-Through Disclosure Rule is the best alternative.

VIII. Statutory Authority

The Commission is repealing the Trade-Through Disclosure Rule pursuant to the Exchange Act, and specifically our authority under sections 3(b), 15, 11A, 17, and 23(a).

List of Subject in 17 CFR Part 240

Brokers, Dealers, Fraud, Issuers, Reporting and recordkeeping requirements, Securities.

For the reasons set out in the preamble, title 17, chapter II of the Code of Federal Regulations is amended as set forth below.

PART 240—GENERAL RULES AND REGULATIONS, SECURITIES ACT OF 1934

1. The authority citation for part 240 continues to read in part as follows:

Authority: 15 U.S.C. 77c, 77d, 77g, 77j, 77s, 77z–2, 77z–3, 77eee, 77ggg, 77nnn, 77sss, 77ttt, 78c, 78d, 78e, 78f, 78g, 78i, 78j, 78j–1, 78k, 78k–1, 78*l*, 78m, 78n, 78o, 78p, 78q, 78s, 78u–5, 78w, 78x, 78*ll*, 78mm, 79q, 79t, 80a–20, 80a–23, 80a–29, 80a–37, 80b–3, 80b–4 and 80b–11, unless otherwise noted.

§ 240.11 [Removed]

2. Section 240.11aC1–7 is removed.

Dated: December 17, 2002.

By the Commission.

Margaret H. McFarland,

Deputy Secretary.

[FR Doc. 02–32469 Filed 12–26–02; 8:45 am]

BILLING CODE 8010–01–M

Federal Register

Friday,
December 27, 2002

Part VI

Environmental Protection Agency

40 CFR Part 50

Stay of Authority Under 40 CFR 50.9(b) Related to Applicability of 1-Hour Ozone Standard; Proposed Rule

ENVIRONMENTAL PROTECTION AGENCY

40 CFR Part 50

[FRL–7430–2]

Stay of Authority Under 40 CFR 50.9(b) Related to Applicability of 1-Hour Ozone Standard

AGENCY: Environmental Protection Agency (EPA).

ACTION: Notice of proposed rulemaking (NPRM).

SUMMARY: The EPA is proposing to stay its authority under the second sentence of 40 CFR 50.9(b) to determine that an area has attained the 1-hour standard (''Proposed Stay'') and that the 1-hour standard no longer applies. The EPA proposes that the stay shall be effective until such time as EPA takes final action in a subsequent rulemaking addressing whether the second sentence of 40 CFR 50.9(b) should be modified in light of the Supreme Court's decision in *Whitman* v. *American Trucking Ass'ns, Inc.,* 531 U.S. 457 (2001), remanding EPA's strategy for the implementation of the 8-hour ozone NAAQS to EPA for further consideration. In the subsequent rulemaking reconsidering the second sentence of 40 CFR 50.9(b), EPA will consider and address any comments concerning (a) which, if any, implementation activities for an 8-hour ozone standard, including designations and classifications, would need to occur before EPA would determine that the 1-hour ozone standard no longer applies to an area, and (b) the effect of revising the ozone NAAQS on the existing 1-hour ozone designations.

DATES: To be considered, comments must be received on or before January 27, 2003.

ADDRESSES: Comments should be submitted (in duplicate, if possible) to the EPA Docket Center (6102T), Attention: Docket Number OAR–2002–0067, U.S. Environmental Protection Agency, EPA West (Air Docket), 1200 Pennsylvania Avenue, NW., Room: B108, Washington, DC 20460, telephone (202) 566–1742, fax (202) 566–1741, between 8:30 a.m. and 4:30 p.m., Monday through Friday, excluding legal holidays. To mail comments through Federal Express, UPS or other courier services, the mailing address is: EPA Docket Center (Air Docket, U.S. Environmental Protection Agency, 1301 Constitution Avenue, NW., Room: B108, Mail Code: 6102T, Washington, DC 20004. A reasonable fee may be charged for copying. Comments and data may also be submitted electronically by following the instructions under **SUPPLEMENTARY INFORMATION** of this document. No confidential business information should be submitted through e-mail.

FOR FURTHER INFORMATION CONTACT: Questions concerning this NPRM should be addressed to Annie Nikbakht, Office of Air Quality Planning and Standards, Air Quality Strategies and Standards Division, Ozone Policy and Strategies Group, MD–C539–02, Research Triangle Park, NC 27711, telephone (919) 541–5246.

SUPPLEMENTARY INFORMATION: *Electronic Availability*—The official record for this proposed rule, as well as the public version, has been established under Docket Number OAR–2002–0067. Submit comments by e-mail to address: *www.epa.gov/rpas.*

Table of Contents

I. Background
II. Summary of Today's Action
III. Statutory and Executive Order Reviews

I. Background

A. The Revised 8-Hour Ozone NAAQS

On July 18, 1997, the EPA promulgated a revised 8-hour National Ambient Air Quality Standard (NAAQS) for ozone. The rule was challenged by a number of industry groups and States in the Court of Appeals for the District of Columbia Circuit (D.C. Circuit). The Court granted many aspects of those challenges and remanded the 8-hour ozone NAAQS to EPA. *American Trucking Ass'ns, Inc.* v. *EPA,* 175 F.3d 1027 (D.C. Cir. 1999) (''*ATA*''). With respect to EPA's authority to implement the revised 8-hour ozone standard, the Court held that the statute was clear on its face that the provisions of ''subpart 2'' applied and then held that under the terms of the statute, the 8-hour standard ''cannot be enforced.'' [1] *Id.* at 1048–1050, 1057. The Court also remanded the standard to EPA on the ground that, under EPA's interpretation of its authority to promulgate the NAAQS, the CAA provided an unconstitutional delegation of authority to EPA. *Id.* at 1034–1040. Finally, the Court held that EPA had failed to consider whether ground-level ozone had some beneficial effects, in particular, whether ground-level ozone acted as a shield from the harmful effects of ultraviolet radiation. *Id.* at 1051–1053. The D.C. Circuit largely denied EPA's request for rehearing, but did modify its decision to say that the 8-hour NAAQS could be enforced, but only in conformity with certain ozone-specific provisions (subpart 2) enacted in 1990. *ATA II,* 195 F.3d 4 (D.C. Cir. 1999).

The EPA requested review by the Supreme Court of two aspects of the D.C. Circuit's decision—the delegation and implementation issues. The Court agreed to consider the case and on February 27, 2000, rejected the D.C. Circuit's holding that EPA's interpretation of the CAA resulted in an unconstitutional delegation of authority. *Whitman* v. *American Trucking Ass'ns, Inc.,* 531 U.S. 457, 472–476 (2001) (*Whitman*). While disagreeing with the Court of Appeals that the CAA was clear on its face that subpart 2 applied for purposes of implementing the revised ozone standard, the Court found unreasonable EPA's assertion that subpart 2 was inapplicable for implementation of the 8-hour ozone NAAQS. The Court remanded the implementation strategy to EPA for further consideration. *Id.* at 481–486.

B. EPA's Revocation Rules

Simultaneous with its promulgation of the 8-hour ozone NAAQS on July 18, 1997, EPA promulgated a final rule governing the continued applicability of the existing 1-hour ozone NAAQS. 40 CFR 50.9(b). The relevant language in 40 CFR 50.9(b) provides: ''The 1-hour standards set forth in this section will no longer apply to an area once EPA determines that the area has air quality meeting the 1-hour standard. Area designations are codified in 40 CFR part 81.'' In part, EPA based this approach on its interpretation that the provisions of subpart 2 of part D of title I of the CAA applied as a matter of law for purposes of implementing the 1-hour ozone NAAQS, but that they would not apply for purposes of implementing the revised ozone standard. Thus, EPA believed it made sense to delay revocation of the 1-hour standard until such time as the provisions of subpart 2 would no longer apply and, at that time, revoke the 1-hour standard. Thus, once an area attained the 1-hour standard and EPA determined the 1-hour standard no longer applied to that area, the provisions of subpart 2 would also no longer apply.

On June 5, 1998, EPA issued a final rule determining that over 2,000

[1] Part D of title I of the Clean Air Act (CAA) contains a number of subparts concerning implementation of the NAAQS. Subpart 1 applies for purposes of implementing all new or revised NAAQS. Subparts 2–5, each apply to one or more specific NAAQS. At the time EPA promulgated the 8-hour ozone NAAQS, EPA indicated that it believed subpart 1 was the only subpart that would apply for purposes of implementing the revised 8-hour NAAQS and stated that subpart 2, which specifically addresses ozone, applied only for purposes of implementing the 1-hour ozone standard.

counties had attained the 1-hour ozone standard and that, therefore, the 1-hour standard and the associated designation for that standard no longer applied to those areas. See ''Identification of Ozone Areas Attaining the 1-Hour Standard to Which the 1-Hour Standard is No Longer Applicable,'' (63 FR 31014, June 5, 1998) (''Revocation Rule''). Subsequently, on August 3, 1998, Environmental Defense and the Natural Resources Defense Council (collectively ''Environmental Defense'') filed a petition for review challenging that rule. *Environmental Defense* v. *EPA* (No. 98–1363, D.C. Cir.).

On June 9, 1999, EPA issued a final rule determining that the 1-hour ozone standard no longer applied in an additional ten areas. Appalachian Mountain Club filed a petition for review challenging that action August 9, 1999. *Appalachian Mountain Club* v. *EPA,* No. 99–1880 (1st Cir.).

Because of the doubt cast on the 8-hour standard and EPA's authority to enforce it by the D.C. Circuit in the *ATA* case, on July 20, 2000, EPA issued a final rule rescinding the Revocation Rules, (65 FR 45182, July 20, 2000) (Rescission Rule).[2] Thus, EPA reinstated the 1-hour ozone NAAQS for all of the counties for which EPA previously determined that the 1-hour ozone NAAQS no longer applied. As part of the Rescission Rule, EPA modified the second sentence in 40 CFR 50.9(b) to provide: ''In addition, after the 8-hour standard has become fully enforceable under part D of title I of the CAA and subject to no further legal challenge, the 1-hour standards set forth in this section will no longer apply to an area once EPA determines that the area has air quality meeting the 1-hour standard. Area designations and classifications with respect to the 1-hour standards are codified in 40 CFR part 81.''

C. Revocation Rule Litigation

The parties in both the Environmental Defense and the Appalachian Mountain Club cases determined to stay the litigation based on EPA's Rescission Rule and the continued litigation regarding the 8-hour ozone NAAQS and EPA's authority to implement that standard. Following the Supreme Court's decision in the *Whitman* case, the parties negotiated a Settlement Agreement that provided for EPA to issue this proposal to stay its authority under 40 CFR 50.9(b) while EPA considers whether to modify the language in 40 CFR 50.9(b) regarding the process and basis for revoking the 1-hour ozone standard. *See* 67 FR 48896 (July 26, 2002). Environmental Defense and Appalachian Mountain Club have agreed to dismiss their cases if EPA issues a final rule staying the revocation provision in 40 CFR 50.9(b) until such time as EPA considers in a subsequent rulemaking whether that provision should be modified and, in the final stay, commits to consider and address in the subsequent rulemaking any comments concerning (a) which, if any, implementation activities for a revised ozone standard (including but not limited to designation and classification of areas) would need to occur before EPA would determine that the 1-hour ozone standard no longer applied to an area, and (b) the effect of revising the ozone NAAQS on existing designations for the pollutant ozone.

II. Summary of Today's Action

The EPA is proposing to stay its authority under the second sentence of 40 CFR 50.9(b) to determine that an area has attained the 1-hour standard and that the 1-hour standard no longer applies. The EPA proposes that the stay shall be effective until such time as EPA takes final agency action in a subsequent rulemaking addressing whether the second sentence of 40 CFR 50.9(b) should be modified in light of the Supreme Court's decision in *Whitman* regarding implementation of the 8-hour NAAQS. In developing a revised 8-hour implementation strategy consistent with the Supreme Court's decision, EPA will consider and address any comments concerning (a) which, if any, implementation activities for an 8-hour ozone standard, including designations and classifications, would need to occur before EPA would determine that the 1-hour ozone standard no longer applied to an area, and (b) the effect of revising the ozone NAAQS on existing designations for the pollutant ozone.

The EPA plans to consider the timeframe and basis for revoking the 1-hour standard in the implementation rulemaking that it plans to issue in response to the Supreme Court's remand. The EPA believes that it is appropriate to reconsider this issue because, at the time EPA promulgated § 50.9(b), EPA anticipated that subpart 2 would not apply for purposes of implementing the revised ozone standard. It makes sense, in light of the many issues that are now being considered regarding implementation of the 8-hour standard, including the applicability of subpart 2 for purposes of implementing that standard, for EPA to consider simultaneously the most effective means to transition from implementation of the 1-hour standard to implementation of the revised 8-hour ozone NAAQS.

III. Statutory and Executive Order Reviews

A. Executive Order 12866: Regulatory Planning and Review

Under Executive Order 12866 (58 FR 51735, October 4, 1993), the EPA must determine whether the regulatory action is ''significant'' and therefore subject to review by the OMB and the requirements of the Executive Order. The Executive Order defines a ''significant regulatory action'' as one that is likely to result in a rule that may:

(1) Have an annual effect on the economy of $100 million or more or adversely affect in a material way the economy, a sector of the economy, productivity, competition, jobs, the environment, public health or safety, or State, local, or tribal governments or communities;

(2) Create a serious inconsistency or otherwise interfere with an action taken or planned by another agency;

(3) Materially alter the budgetary impact of entitlement, grants, user fees, or loan programs or the rights and obligations of recipients thereof; or

(4) Raise novel legal or policy issues arising out of legal mandates, the President's priorities, or the principles set forth in the Executive Order.

Pursuant to the terms of Executive Order 12866, it has been determined that this action is not a ''significant regulatory action'' and was not submitted to OMB for review.

B. Paperwork Reduction Act

This proposed rule does not contain any information collection requirements which require OMB approval under the Paperwork Reduction Act (44 U.S.C. 3501 *et seq.*).

C. Regulatory Flexibility Act (RFA)

The RFA generally requires an agency to prepare a regulatory flexibility analysis of any rule subject to notice-and-comment rulemaking requirements under the Administrative Procedure Act or any other statute unless the agency certifies that the rule will not have a significant economic impact on a substantial number of small entities. Small entities include small businesses, small organizations, and small governmental jurisdictions.

For purposes of assessing the impacts of today's proposed rule on small entities, small entity is defined as: (1) A small business as defined in the Small

[2] In addition to the two Revocation Rules that were challenged, EPA issued a third Revocation Rule on July 22, 1998 that was not challenged, (63 FR 39432).

Business Administration's (SBA) regulations at 13 CFR 12.201; (2) a small governmental jurisdiction that is a government of a city, county, town, school district or special district with a population of less than 50,000; and (3) a small organization that is any not-for-profit enterprise which is independently owned and operated and is not dominant in its field.

After considering the economic impacts of today's proposed rule on small entities, I certify that this action will not have a significant economic impact on a substantial number of small entities.

This action will not impose any requirements on small entities. This action proposes to stay EPA's authority under the second sentence of 40 CFR 50.9(b) to determine that an area has attained the 1-hour standard and that the 1-hour standard no longer applies. It does not establish requirements applicable to small entities.

D. Unfunded Mandates Reform Act

Title II of the Unfunded Mandates Reform Act of 1995 (UMRA), Public Law 104–4, establishes requirements for Federal agencies to assess the effects of their regulatory actions on State, local, and Tribal governments, and the private sector. Under section 202 of UMRA, EPA generally must prepare a written statement, including a cost-benefit analysis, for proposed and final rules with ''Federal mandates'' that may result in expenditures by State, local, and Tribal governments, in the aggregate, or by the private sector, of $100 million or more in any one year. Before promulgating an EPA rule for which a written statement is needed, section 205 of UMRA generally requires EPA to identify and consider a reasonable number of regulatory alternatives and adopt the least costly, most cost-effective or least burdensome alternative that achieves the objectives of the rule. The provisions of section 205 do not apply when they are inconsistent with applicable laws. Moreover, section 205 allows EPA to adopt an alternative other than the least costly, most cost-effective or least burdensome alternative if the Administrator publishes with the final rule an explanation why that alternative was not adopted. Before EPA establishes any regulatory requirements that may significantly or uniquely affect small governments, including Tribal governments, it must have developed under section 203 of UMRA a small government agency plan. The plan must provide for notifying potentially affected small governments, enabling officials of affected small governments to have meaningful and timely input in the development of EPA regulatory proposals with significant Federal intergovernmental mandates, and informing, educating, and advising small governments on compliance with the regulatory requirements.

This proposed action also does not impose any additional enforceable duty, contain any unfunded mandate, or impose any significant or unique impact on small governments as described in UMRA. Because today's action does not create any additional mandates, no further UMRA analysis is needed.

E. Executive Order 13132: Federalism

Executive Order 13132, entitled ''Federalism'' (64 FR 43255, August 10, 1999), requires EPA to develop an accountable process to ensure ''meaningful and timely input by State and local officials in the development of regulatory policies that have federalism implications.'' ''Policies that have federalism implications'' are defined in the Executive Order to include regulations that have ''substantial direct effects on the States, on the relationship between the national government and the States, or on the distribution of power and responsibilities among the various levels of government.''

Under section 6 of Executive Order 13132, EPA may not issue a regulation that has federalism implications, that imposes substantial direct compliance costs, and that is not required by statute, unless the Federal government provides the funds necessary to pay the direct compliance costs incurred by State and local governments, or EPA consults with State and local officials early in the process of developing the proposed regulation. The EPA also may not issue a regulation that has federalism implications and that preempts State law, unless the Agency consults with State and local officials early in the process of developing the proposed regulation.

This proposed action does not have federalism implications. It will not have substantial direct effects on the States, on the relationship between the national government and the States, or on the distribution of power and responsibilities among the various levels of government, as specified in Executive Order 13132. This action stays the language of 40 CFR 50.9(b) regarding EPA's authority to take action and imposes no additional burdens on States or local entities; it does not change the existing relationship between the national government and the States or the distribution of power and responsibilities among the various branches of government. Thus, the requirements of section 6 of this Executive Order do not apply to this proposed rule.

F. Executive Order 13175: Consultation and Coordination with Indian Tribal Governments

Executive Order 13175, entitled ''Consultation and Coordination with Indian Tribal Governments'' (65 FR 67249, November 9, 2000), requires EPA to develop an accountable process to ensure ''meaningful and timely input by tribal officials in the development of regulatory policies that have Tribal implications.'' This proposed rule does not have Tribal implications, as specified in Executive Order 13175, because it will not have a substantial direct effect on one or more Indian Tribes, on the relationship between the Federal Government and Indian Tribes, or on the distribution of power and responsibilities between the Federal Government and Indian Tribes. Today's action does not significantly or uniquely affect the communities of Indian Tribal governments, and does not impose substantial direct compliance costs on such communities. Thus, Executive Order 13175 does not apply to this proposed rule.

G. Executive Order 13045: Protection of Children From Environmental Health and Safety Risks

The EPA interprets Executive Order 13045 as applying only to those regulatory actions that are based on health or safety risks, such that the analysis required under section 5–501 of the Order has the potential to influence the regulation. This proposed rule is not subject to Executive Order 13045, because this action is not ''economically significant'' as defined under Executive Order 12866 and there are no environmental health risks or safety risks addressed by this rule.

H. Executive Order 13211: Actions That Significantly Affect Energy Supply, Distribution, or Use

This rule is not subject to Executive Order 13211, ''Actions Concerning Regulations That Significantly Affect Energy Supply, Distribution, or Use'' (66 FR 28355, May 22, 2001) because it is not a significant regulatory action under Executive Order 12866.

I. National Technology Transfer Advancement Act

Section 12 of the National Technology Transfer Advancement Act (NTTAA) of 1995 requires Federal agencies to evaluate existing technical standards when developing new regulations. To comply with NTTAA, EPA must

consider and use ''voluntary consensus standards'' (VCS) if available and applicable when developing programs and policies unless doing so would be inconsistent with applicable law or otherwise impractical.

The EPA believes that VCS are inapplicable to this proposed action. Today's proposed action does not require the public to perform activities conducive to the use of VCS.

J. Executive Order 12898: Federal Actions to Address Environmental Justice in Minority Populations and Low-Income

Populations

Under Executive Order 12898, each Federal agency must make achieving environmental justice part of its mission by identifying and addressing, as appropriate, disproportionately high and adverse human health or environmental effects of its programs, policies, and activities on minorities and low-income populations. Today's proposed action to stay EPA's authority under 40 CFR 50.9(b) related to applicability of the 1-hour ozone standard does not have a disproportionate adverse effect on minorities and low-income populations.

List of Subjects in 40 CFR Part 50

Environmental protection, Air pollution control, Carbon monoxide, Lead, Nitrogen dioxide, Ozone, Particulate matter, Sulfur oxides.

Dated: December 19, 2002.

Christine Todd Whitman,

Administrator.

For the reasons set forth in the preamble, part 50 of chapter I of title 40 of the Code of Federal Regulations is proposed to be amended as follows:

PART 50—AMENDED

1. The authority citation for part 50 continues to read as follows:

Authority: 42 U.S.C. 7410, *et seq.*

2. Section 50.9 is proposed to be amended by adding paragraph (c) to read as follows:

§ 50.9 National 1-hour primary and secondary ambient air quality standards for ozone.

* * * * *

(c) EPA's authority under paragraph (b) of this section to determine that an area has attained the 1-hour standard and that the 1-hour standard no longer applies is stayed until such time as EPA issues a final rule revising or reinstating such authority.

[FR Doc. 02–32577 Filed 12–26–02; 8:45 am]

BILLING CODE 6560–50–P

Federal Register

Friday,
December 27, 2002

Part VII

Securities and Exchange Commission

17 CFR Parts 230, et al.

Mandated Electronic Filing and Web Site Posting for Forms 3, 4, and 5; Proposed Rule

SECURITIES AND EXCHANGE COMMISSION

17 CFR Parts 230, 232, 239, 240, 249, 250, 259, 260, 269 and 274

[Release Nos. 33–8170, 34–47069, 35–27627, IC–25872; File No. S7–52–02]

RIN 3235–AI26

Mandated Electronic Filing and Web Site Posting for Forms 3, 4 and 5

AGENCY: Securities and Exchange Commission.

ACTION: Proposed rule.

SUMMARY: We are proposing rule and form amendments to mandate the electronic filing, and website posting by issuers with corporate websites, of beneficial ownership reports filed by officers, directors and principal security holders under Section 16(a) of the Securities Exchange Act of 1934, generally as required by Section 403 of the Sarbanes-Oxley Act of 2002. We intend to adopt the amendments to implement the statutory changes as soon as reasonably practicable before the July 30, 2003 date mandated by the statute. We are also implementing changes to the EDGAR system in order to facilitate electronic filing. In addition, we are proposing rule changes to eliminate magnetic cartridges as a means of electronic filing. The intended general effect of the proposals is to facilitate compliance with the will of Congress, as reflected in amended Section 16(a), and to facilitate the more efficient transmission, dissemination, analysis, storage and retrieval of insider ownership and transaction information in a manner that will benefit investors, filers and the Commission.

DATES: Please submit your comments on or before February 10, 2003.

ADDRESSES: To help us process and review your comments more efficiently, please send your comments by one method only.

Please submit three copies of your comments to Jonathan G. Katz, Secretary, U.S. Securities and Exchange Commission, 450 Fifth Street, NW., Washington, DC 20549–0609. You also may submit your comments electronically at the following e-mail address: *rule-comments@sec.gov.* Please have your comment letter refer to File No. S7–52–02 and include this file number in the subject line if you use e-mail. We will make comment letters available for public inspection and copying in our Public Reference Room, 450 Fifth Street, NW., Washington, DC 20549–0102. We will post electronically submitted comments on our Internet website (*http://www.sec.gov*).[1]

FOR FURTHER INFORMATION CONTACT: Mark W. Green, Senior Special Counsel (Regulatory Policy), at (202) 942–1940, or Anne M. Krauskopf, Special Counsel, at (202) 942–2900, Division of Corporation Finance, U.S. Securities and Exchange Commission, 450 Fifth Street, NW., Washington, DC 20459–0301.

SUPPLEMENTARY INFORMATION: We propose to amend Rule 101[2] under Regulation S–T[3] and Rule 16a–3(h)[4] and Forms 3, 4 and 5[5] under the Securities Exchange Act of 1934 (''Exchange Act'').[6] We also propose to add new Rule 16a–3(k) under the Exchange Act. Finally, we propose to rescind Form ET[7] and amend Rule 12 of Regulation S–T,[8] Rule 110[9] under the Securities Act of 1933 (''Securities Act''),[10] Rule 0–2[11] under the Exchange Act, Rule 21[12] under the Public Utility Holding Company Act of 1935 (''Public Utility Act'')[13] and Rule 0–5[14] under the Trust Indenture Act of 1939 (''Trust Indenture Act'').[15]

I. Background

Section 16[16] applies to every person who is the beneficial owner of more than 10% of any class of equity security registered under Section 12 of the Exchange Act[17] and each officer and director (collectively, ''reporting persons'' or ''insiders'') of the issuer of the security. Upon becoming a reporting person, or upon the Section 12 registration of that class of securities, Section 16(a)[18] requires a reporting person to file an initial report[19] with the Commission disclosing the amount of his or her beneficial ownership of all equity securities of the issuer.[20] To keep this information current, Section 16(a) also requires reporting persons to report to the Commission[21] changes in this ownership, or the purchase or sale of a security-based swap agreement[22] involving these equity securities.[23]

Before the enactment of the Sarbanes-Oxley Act of 2002 (the ''Sarbanes-Oxley Act''),[24] Section 16(a) required insiders to file reports of these transactions within 10 days after the close of each calendar month in which the change in ownership or purchase or sale of a security-based swap agreement occurred. The Sarbanes-Oxley Act amended Section 16(a), effective for transactions on or after August 29, 2002, to require insiders to file reports of these transactions ''before the end of the second business day following the day on which the subject transaction has been executed, or at such other time as the Commission shall establish, by rule, in any case in which the Commission determines that such 2-day period is not feasible.''[25] On August 27, 2002, we adopted rule and form amendments to

[1] We do not edit personal, identifying information, such as names or electronic mail addresses, from electronic submissions. Submit only information that you wish to make publicly available.

[2] 17 CFR 232.101.

[3] 17 CFR 232.10 *et seq.*

[4] 17 CFR 240.16a–3(h).

[5] 17 CFR 249.103, 249.104 and 249.105. Forms 3 and 4 also are authorized under the Investment Company Act of 1940 [15 U.S.C. 80a–1 *et seq.*] under 17 CFR 274.202 and 274.203.

[6] 15 U.S.C. 78 *et seq.*

[7] 17 CFR 239.62, 249.445, 259.601, 269.6 and 274.401.

[8] 17 CFR 232.12.

[9] 17 CFR 230.110.

[10] 15 U.S.C. 77a *et seq.*

[11] 17 CFR 240.0–2.

[12] 17 CFR 250.21.

[13] 15 U.S.C. 79a *et seq.*

[14] 17 CFR 260.0–5.

[15] 15 U.S.C. 77aaa *et seq.*

[16] 15 U.S.C. 78p.

[17] 15 U.S.C. 78*l*.

[18] 15 U.S.C. 78p(a).

[19] Insiders file initial reports on Form 3.

[20] Rule 3a12–3 [17 CFR 240.3a12–3] provides that securities registered by a foreign private issuer, as defined in Rule 3b–4 [17 CFR 240.3b–4], are exempt from Section 16. The legislative and regulatory actions addressed in this release do not change this exemption.

[21] Section 16(a) also requires reporting persons to file their initial and transactional reports with each national securities exchange on which the issuer lists its equity securities. For classes of securities listed on the New York Stock Exchange, the American Stock Exchange and the Chicago Stock Exchange, filing Section 16(a) reports on EDGAR satisfies the requirements of Section 16(a)(1) (as amended) and Rule 16a–3(c) to file the reports with the exchange on which the securities are listed. See staff no-action letters to New York Stock Exchange (Jul. 22, 1998), American Stock Exchange (Jul. 22, 1998) and Chicago Stock Exchange (Jan. 18, 1998).

[22] As defined in Section 206B of the Gramm-Leach-Bliley Financial Modernization Act of 1999, as amended by H.R. 4577, Pub. L. 106–554, 114 Stat. 2763.

[23] Insiders file transaction reports on Forms 4 and 5.

[24] Pub. L. 107–204, 116 Stat. 745.

[25] Section 16(a)(2)(C) (15 U.S.C. 78p(a)(2)(C)), as amended by Section 403 of the Act. Section 30(h) of the Investment Company Act of 1940 (15 U.S.C. 80a–29(h)) provides that ''Every person who is directly or indirectly the beneficial owner of more than 10 per centum of any class of outstanding securities (other than short-term paper) of which a registered closed-end company is the issuer or who is an officer, director, member of an advisory board, investment adviser, or affiliated person of an investment adviser of such a company shall in respect of his transactions in any securities of such company (other than short-term paper) be subject to the same duties and liabilities as those imposed by section 16 of the Securities Exchange Act of 1934 upon certain beneficial owners, directors, and officers in respect of their transactions in certain equity securities.'' Accordingly, the Sarbanes-Oxley Act's amendments also accelerate the deadline for change of beneficial ownership reports required under Section 30(h).

implement the accelerated filing deadline.[26]

The Sarbanes-Oxley Act also amended Section 16(a) to require, not later than July 30, 2003, insiders to file electronically, and the Commission and issuers with corporate websites to post on their websites, change in beneficial ownership reports.[27] Today we propose rule and form amendments to implement the electronic filing and website posting requirements and make related changes.

Currently, insiders may file reports on Forms 3, 4 and 5 in paper or electronically on the Commission's Electronic Data Gathering, Analysis and Retrieval System (''EDGAR'').[28] We initially launched EDGAR as a pilot program in 1984, which enabled companies to participate voluntarily in the EDGAR system until 1993. At that time, we adopted rules, primarily Regulation S–T,[29] to implement the operational phase of EDGAR, which imposed electronic filing requirements only on domestic issuers.[30] Initially, the rules prohibited electronic filing of Forms 3, 4 and 5. The adopting release, however, stated that the Commission expected to address later the electronic filing of these forms.

Since the adoption of mandated EDGAR for domestic issuers, we have been moving toward requiring electronic filing of Forms 3, 4 and 5. In 1995, we revised Regulation S–T to permit voluntary electronic filing of Forms 3, 4 and 5.[31] In 1996, we asked for comment on whether to require EDGAR filing of any documents then allowed to be filed electronically on a voluntary basis.[32] Early in 2000, we announced that we intended to propose mandated electronic filing of Forms 3, 4 and 5 and asked for comments.[33] Later in 2000, we reiterated our expectation of proposing these requirements and stated that we would consider the comments received in connection with future rulemaking.[34]

In implementing Congress' directive to require Forms 3, 4 and 5 to be filed on EDGAR, we seek to achieve the same benefits for investors, filers and the Commission that we sought when we first mandated electronic filing for most documents. Since its inception, the primary goals of our EDGAR system have been to facilitate the rapid dissemination of financial and business information about companies and other parties participating in U.S. capital markets while making the transmission and the Commission's processing of filings more efficient.

Mandated electronic filing benefits members of the investing public and the financial community by making information contained in Commission filings available to them minutes after receipt by the Commission. Information concerning insiders' transactions in issuer equity securities will be publicly accessible substantially sooner than it was before. In addition, the electronic format of the information facilitates research and data analysis. The new accelerated Section 16(a) filing requirement described above makes electronic filing even more valuable. Finally, investors clearly want electronic access to these forms.[35] Many investors believe that reports of directors' and executive officers' transactions in company equity securities provide useful information as to management's views of the performance or prospects of the company and that more timely and transparent access to reports will be even more useful.

Filers will benefit from changes to the electronic filing system specifically designed to make electronic filing easier while continuing to provide speedy, secure and reliable transmission, as discussed below. We note that many companies help their insiders or make the insiders' filings for them. We encourage this practice to facilitate accurate and timely filing. Our intention, however, is to create a system that insiders can use relatively easily themselves, particularly as an insider is legally responsible for filing regardless of who submits a filing on the insider's behalf.[36]

The use of EDGAR also will facilitate more efficient storage, retrieval and analysis of ownership and transaction information than paper filing. Quicker access to ownership and transaction information should not only facilitate review of the information but also enhance the Commission's ability to study and address issues that relate to this information.

Website posting of Forms 3, 4 and 5 by issuers with corporate websites will provide a convenient, rapidly disseminated electronic source in addition to EDGAR that is conducive to research and data analysis. One of the objectives of the proposal is to encourage the availability of this information in a variety of locations so that it is broadly accessible.

II. The Proposed Rule Amendments

A. Required Electronic Filing of Forms 3, 4 and 5

We propose to amend Regulation S–T[37] to require insiders to file Forms 3,

[26] Release No. 34–46421 (September 3, 2002) [56 FR 56462].

[27] Section 16(a)(4), as amended by Section 403 of the Sarbanes-Oxley Act.

[28] Rule 101(b)(4) of Regulation S–T [17 CFR 232.101(b)(4)]. The percentage of Forms 3, 4 and 5 filed electronically on the current EDGAR system increased from approximately 8% in June 2002 (the last month before the Sarbanes-Oxley Act was enacted) to approximately 15% in August 2002 (the month the accelerated filing deadline took effect). The percentage held at approximately 15% in September 2002 but increased to approximately 25% in October 2002 and remained at that level in November 2002.

[29] Release No. 33–6977 (February 23, 1993) [58 FR 14628].

[30] In 2002, we adopted rules generally requiring foreign issuers to file electronically beginning in early November, 2002. Release No. 33–8099 (May 14, 2002).

[31] Release No. 33–7241 (November 13, 1995) [60 FR 57682].

[32] Release No. 33–7369 (Dec. 5, 1996) [61 FR 65440]. Only one commenter, an organization consisting of issuers, clearly responded as to Forms 3, 4, and 5. This commenter favored permitting the voluntary EDGAR filing of these forms and opposed their mandated EDGAR filing. The commenter claimed as reasons unnecessary additional hardship on insiders, disparate treatment between foreign insiders who would be required to file on EDGAR and foreign issuers who would not, the burden faced by insiders' companies who would be forced by the new mandate to file for their insiders, the Commission's uncertain capacity to process all the forms at peak time, and the lack of a compelling public interest in somewhat accelerating the dissemination of information that often is somewhat stale even if filed timely. As discussed below, technological advances and a user-friendly approach should minimize hardship on insiders. As noted above, rules recently took effect generally mandating foreign issuer EDGAR filing. The Commission plans to have the capacity to process all the forms at peak time. In addition to the Act's mandate, there is now a strong public interest in facilitating electronic access to the forms whose filing has been accelerated due to the new two-business day filing requirements described above.

[33] Release No. 33–7803 (Feb. 25, 2000) [65 FR 11507]. We received four comment letters on our anticipated EDGAR rulemaking for Forms 3, 4 and 5. Three commenters favored mandating EDGAR filing for all these forms. Reasons given for mandating included ease of filing using a template and ease of access to the underlying information. The commenter that provided its views on Release No. 33–7369, as described in the note above, favored permitting the voluntary EDGAR filing of the forms and opposed their mandated EDGAR filing. This commenter cited essentially the same reasons it raised in its prior comment letter.

[34] Release No. 33–7855 (Apr. 27, 2000) [65 FR 24788]. We generally have addressed the electronic filing of Form 144 [17 CFR 239.144] in the same releases as we have addressed the electronic filing of Forms 3, 4 and 5. Although the current proposals do not address Form 144, we may in the future propose to require that form to be filed electronically.

[35] A number of commenters on Release No. 33–8090 (Apr. 12, 2002) [67 FR 19914] (the ''Form 8–K Proposing Release'') regarding Form 8–K disclosure of management transactions as well as commenters on accelerated Section 16 filing addressed electronic filing of Section 16(a) reports. Many of the commenters supported mandated Section 16(a) report filing.

[36] *Cf.* In the Matter of Bettina Bancroft, Release No. 34–32033 (Mar. 23, 1993).

[37] Regulation S–T is the general regulation governing EDGAR filing. In addition to complying with Regulation S–T, filers must submit electronic

Continued

4 and 5 with us on EDGAR.[38] As noted above, Rule 101(b)(4) of Regulation S–T currently permits reporting persons to file Forms 3, 4 and 5 on EDGAR. The proposed amendments would revise Rule 101 by:

- Removing subparagraph (4) from subparagraph (b) (the voluntary EDGAR filing paragraph); and
- Adding a reference to forms filed under Section 16(a) to subparagraph (a)(1)(iii) (located in the mandated EDGAR filing paragraph).

B. Required Website Posting of Forms 3, 4 and 5

We propose to amend Rule 16a–3[39] to add a new paragraph (k) to require an issuer that maintains a corporate website to post on its website all Forms 3, 4 and 5 filed with respect to its equity securities by the end of the business day after filing.[40] An issuer could satisfy this requirement whether it provides access directly or by hyperlinking[41] to them via a third-party service[42] in lieu of maintaining the forms itself if the following conditions were met:

- The forms are made available in the appropriate time frame;
- Access to the reports is free of charge to the user;
- The display format allows retrieval of all information in the forms;[43]
- The medium to access the forms is not so burdensome that the intended users cannot effectively access the information provided;[44]
- The access includes any exhibits or attachments;
- The forms are accessible for at least a 12-month period;
- Access to the forms is through the issuer website address the issuer normally uses for disseminating information to investors;[45] and
- Any hyperlink is directly to the Section 16 forms (or to a list of the Section 16 forms) instead of just to the home page or general search page of the third-party service.[46]

It is our intent to make the website posting requirement become effective at the same time as the electronic filing requirement. However, we encourage issuers to post Section 16(a) reports on their websites before the implementation date.

C. Rule 16a–3(h)

We propose to delete as no longer necessary the deemed timely filed provision in Rule 16a–3(h) under the Exchange Act, effective at the same time the Forms 3, 4 and 5 electronic filing requirement becomes effective. Rule 16a–3(h) states that the date of filing generally is the date of receipt by the Commission. The proposed deletion would not affect this statement. However, the rule also has a provision that states, in general, that a Form 3, 4 or 5 will be deemed timely filed if the filing person establishes that the form was timely delivered to a third party entity providing delivery services in the ordinary course of business that guaranteed delivery of the filing to the Commission no later than the required filing date. This ''deemed timely filed'' provision was designed for and applies only to paper filings, and we believe it no longer will be needed once the electronic filing requirement is effective.[47]

The proposed amendments would not alter the provisions governing the availability of hardship exemptions under Regulation S–T. A filer that meets the requirements of Section 201 or 202 of Regulation S–T[48] may obtain a temporary or continuing hardship exemption from EDGAR filing requirements.[49] As is the case with forms currently required to be filed on EDGAR, we expect that hardship exemptions for Forms 3, 4 and 5 will be available infrequently.[50] A failure to obtain timely an identification number or access codes will not justify a hardship exemption.[51] Moreover, as is also the case with forms currently required to be filed on EDGAR, upon effectiveness of the rules we propose today, our filing desk will not accept in paper format any Form 3, 4 or 5 unless the filing satisfies the requirements for a temporary or continuing hardship exemption under Regulation S–T.[52]

D. Forms 3, 4 and 5

We propose some minor changes to Forms 3, 4 and 5 to facilitate the electronic filing provisions, as follows:

1. Amend the introductory section before the General Instructions of Forms

documents in accordance with the instructions in the EDGAR Filer Manual.

[38] Regulation S–T also requires the electronic filing of any related correspondence and supplemental information pertaining to a document that is the subject of mandated EDGAR. Regulation S–T Rule 101(a)(1) [17 CFR 232.101(a)(1)]]. These materials are not disseminated publicly but are available to the Commission staff. This requirement would apply to persons who file Forms 3, 4 and 5 upon adoption of the proposed amendments.

[39] 17 CFR 240.16a–3.

[40] Rule 16a–3(e) [17 CFR 240.16a–3(e)] requires insiders to send or deliver a copy of each form to the issuer not later than when the form is transmitted for filing with the Commission. This copy must go to the person designated to receive such communications, or in the absence of this designation, to the issuer's corporate secretary or person performing equivalent functions. Issuers will most likely want to designate a manner of receiving these communications electronically.

[41] In Release No. 33–7856 (Apr. 28, 2000) [65 FR 25843] (the ''2000 Release''), we provided interpretive guidance on the possible effects of hyperlinking to a third-party website. See the 2000 Release, at n. 48 and the accompanying text.

[42] Hyperlinking via EDGAR would satisfy the posting requirement if the conditions in this section otherwise are met. EDGAR currently displays Forms 3, 4 and 5 filed electronically and will do so under the contemplated on-line system, in both cases shortly after filing and within the period required by Section 16(a)(4)(B) (by the end of the business day after filing).

[43] In this regard, we note that some third-party service providers publish only Table I information, which would not satisfy this condition. The display format would need to publish all form information.

[44] See, for example, Release No. 33–7233 (Oct. 6, 1995) [60 FR 53458], at n. 24 and the accompanying text.

[45] If the issuer has a corporate website but does not normally disseminate information to investors through the website, it must provide access to the forms through a location on its website that it reasonably believes will facilitate user access to the forms.

[46] An issuer could present the viewer with an intermediate screen stating that the visitor is leaving the issuer's website. Also, a disclaimer of responsibility for the accuracy of the third-party service would not make the website posting ineffective for purposes of the posting requirement. See generally regarding issuer website posting Release No. 33–8128 (Sept. 16, 2002) [67 FR 58480], at n. 132 and accompanying text.

[47] Rule 13(b) under Regulation S–T [17 CFR 232.13(b)] addresses instances where an electronic filer attempts in good faith to file a document with the Commission in a timely manner but the filing is delayed due to technical difficulties beyond the filer's control. In those instances, the filer may request an adjustment of the document's filing date. We may grant the request if it appears that the adjustment is appropriate and consistent with the public interest and the protection of investors. A filing date adjustment will thus be available in what we expect to be rare appropriate circumstances.

[48] 17 CFR 232.201 or 232.202. An EDGAR filer may obtain a temporary hardship exemption if it experiences unanticipated technical difficulties that prevent the timely preparation and submission of an electronic filing. See 17 CFR 232.201(a). An EDGAR filer may apply for a continuing hardship exemption if it cannot file all or part of a filing without undue burden or expense. See 17 CFR 232.202(a).

[49] A filer obtains a temporary hardship exemption by filing a properly legended paper copy of the filing under cover of Form TH under Regulation S–T Rule 201. In contrast to this self-executing process, a filer can obtain a continuing hardship exemption only by submitting a written application under Regulation S–T Rule 202, upon which the Commission staff must then act under delegated authority. It is unlikely that a continuing hardship exemption would be granted with respect to Forms 3, 4 or 5, given the nature of the information that appears in these forms and the expected ease of electronic filing.

[50] In addition to pursuing a hardship exemption, a filer that has in good faith attempted to submit a filing in a timely manner but has experienced a delay due to technical conditions beyond its control may request a filing date adjustment under Regulation S–T Rule 13(b). See n. 47 above.

[51] See the note to Rule 10 of Regulation S–T [17 CFR 232.10] (''The Commission strongly urges any person or entity about to become subject to the disclosure and filing requirements of the federal securities laws to submit a Form ID [(through which an identification number and access codes are obtained)] well in advance of the first required [(electronic)] filing, * * *, in order to facilitate electronic filing on a timely basis'').

[52] Rule 14 of Regulation S–T [17 CFR 232.14].

3, 4 and 5 to delete the reference to IRS identification numbers. Consistent with that deletion, we propose to delete from each of the forms Item 3 (before Table I), which provides a space for a filer that is an entity, at its option, to include an IRS identification number.[53] We believe this information is unnecessary in this context. An IRS identification number is not useful for tracking because only some filers provide it. Only non-natural person filers may provide it and even they may choose whether to do so.

2. Amend the General Instructions to Forms 3, 4 and 5 to

- Delete the statement that electronic filing is optional;[54]
- Add a statement making it clear that electronic filing is mandatory absent a hardship exemption, referencing Regulation S–T, and describing how to obtain staff assistance in electronic filing;[55] and
- Add a note providing instructions for filing in paper pursuant to a hardship exemption.[56]

3. Amend Instruction 6 to Forms 3, 4, and 5 to indicate that if a filer runs out of space on the electronic form, the filer should put the additional information in a footnote, and if there is not enough room in the space provided for a footnote, the footnote should refer to an exhibit to the form that contains the additional information.[57]

4. Amend Items 4 and 5 of the items before Table I of Form 5 to require that, when addressing the date as to which the form is filed, a day be specified in addition to, as currently required, a month and year. Adding a day requirement will result in a full date that will ease processing and searches.

5. Amend the heading of column 9 of Table II of Form 5 to clarify that the reference to ''year'' is a reference to the issuer's fiscal year, which will make the heading consistent with the heading of column 5 of Table I of Form 5.

E. Form ET

Currently, electronic filers may make electronic submissions either as direct transmissions, via dial-up modem or Internet, or on magnetic cartridge.[58] However, the number of filers using magnetic cartridges is minimal. In the current calendar year, one filer has filed one magnetic cartridge containing a single form. The filer apparently used the magnetic cartridge approach solely to avoid a temporary problem with direct transmission. Therefore, we propose to eliminate magnetic cartridges as a transmission medium and to eliminate Form ET,[59] the transmittal form that must accompany all magnetic cartridge submissions.[60]

F. Comment Solicited

We request comment on the rule and form changes we propose in this release.

Question regarding facilitating statutory requirements in general:

- Would any other technical amendments help to implement Exchange Act Section 16(a)(4)?

Questions regarding electronic filing of Section 16 forms:

- Are there ways we can help introduce new electronic filers to the system?
- Are there any barriers to issuers' helping insiders to file or filing on insiders' behalf Section 16 forms and, if so, how can these barriers be eliminated or reduced?

Questions regarding website posting:

- In addition to proposed Rule 16a–3(k), are any rules needed to facilitate the statutory requirement that an issuer maintaining a corporate website post all filings of Forms 4 and 5 reporting transactions in its equity securities on that website by the end of the business day after the filing?
- Should we permit issuers that maintain corporate websites not to post Forms 3 or to post them later than the end of the business day after filing? If delayed posting of Forms 3 is appropriate, how great a delay should be permitted? Is posting Forms 3 necessary to provide a complete picture?
- Should issuers whose equity securities are subject to Section 16 but do not have a corporate website be required to disclose in their Forms 10–K or 10–KSB[61] why they are not subject to the posting requirement?
- Are there more conditions we should require if an issuer hyperlinks to a third-party site to satisfy its posting requirement? Are any of the conditions we would require not necessary? Are there any forms of hyperlinking that would not foster widespread dissemination and access?
- Should we condition satisfaction of the posting requirement on keeping the forms accessible for a period other than 12 months? The 12-month period would provide time to assess a group of transactions, including a purchase and sale or sale and purchase within six months of each other (''short-swing transactions'') that may raise issues under Section 16(b).[62] A shorter period, however, also could help to identify short-swing transactions. Should the period be longer to better fulfill the informational purposes of Section 16(a) or to accommodate the statute of limitations? Should the period be shorter because the information is available on the EDGAR database?
- We invite commenters considering the website posting issue to address the relative costs and benefits of each approach.

—For example, would establishing a hyperlink through a third-party service allow issuers to comply with the statutory requirement in a more timely and cost-efficient way than by maintaining the reports on their own website?

—Conversely, would maintaining the reports on the issuer's own website be more advantageous to users?

—In this regard, if a form were maintained through a hyperlink, would it remain equally portable, so that a user could download it and print it out in its original or other readily understood format?

—Should it be adequate to hyperlink to the Section 16 forms as a group or a list of them rather than to each form?

Question regarding the deemed timely filed provision of Rule 16a–3(h):

- Are there any instances in which use of the Rule 16a–3(h) deemed timely filed provision would remain appropriate when electronic filing is required?

Since the initial adoption of Regulation S–T in 1993,[63] filers who file in paper under the temporary hardship exemption have been required to submit an electronic format copy of the filed paper document within six business

[53] The following items will be renumbered.

[54] See current General Instruction 3(a) to Form 3, and current General Instruction 2(a) to Forms 4 and 5.

[55] See proposed General Instruction 3(a) to Form 3 and proposed General Instruction 2(a) to Forms 4 and 5.

[56] See proposed note to General Instruction 3 and General Instruction 2, respectively.

[57] Ownership and transaction information must be disclosed to the greatest extent possible in the forms' Tables I and II rather than in footnotes and attachments in order to maximize the value of EDGAR's tagging the data in the tables, and thus facilitate analysis.

[58] See Rules 12(b) and 12(c) of Regulation S–T [17 CFR 232.12(b) and 232.12(c)].

[59] 17 CFR 239.62, 249.445, 259.601, 269.6 and 274.401.

[60] See proposed related amendments to Securities Act Rule 110 [17 CFR 230.110], Rule 12 of Regulation S–T [17 CFR 232.12 and 232.103], Exchange Act Rule 0–2 [17b CFR 240.0–2], Public Utility Act Rule 21 [17 CFR 250.21], and Trust Indenture Act Rule 0–5 [17 CFR 260.0–5].

[61] 17 CFR 249.310 and 249.310b.

[62] 15 U.S.C. 78p(b). In Release No. 33–8128 (Sept. 16, 2002) [67 FR 58480], in the context of discussing Form 10–K disclosure of issuer website posting of periodic reports, we suggested that issuers provide website access to their reports for at least a 12-month period.

[63] Release No. 33–6977.

days of the filing of the paper format document.[64]

Questions regarding temporary hardship exemptions:

• In light of technological developments, decreased costs and the benefits of electronic availability, should we require a shorter period of as few as two or three business days? If so, should this shorter time period apply generally to all required filings, or solely to Forms 3, 4 and 5?

• Alternatively, given the expected ease of electronic filing and the limited utility to investors of paper filings, should we eliminate the ability to use the temporary hardship exemption for Section 16 filings? If so, should we provide a sunset provision that eliminates the ability after a specified time (*e.g.*, six months or a year after the electronic filing requirement is effective)?

Rule 13(a)(3) of Regulation S–T addresses electronic submission acceptance. Currently, persons can file by direct electronic transmission between the hours of 8 a.m. and 10 p.m., Washington, DC time on weekdays that are not federal holidays. An accepted filing that begins before 5:30 p.m. Washington, DC time is deemed filed on the same day. Generally, an accepted filing that begins after 5:30 p.m. is deemed filed on the next business day.[65] However, a post-effective amendment or registration statement filed to increase the number of securities registered as permitted by Securities Act Rule 462(b)[66] is deemed filed on the same business day (as long as it is received before 10 p.m.).[67] Questions regarding electronic submission acceptance:

• Should we amend Rule 13(a)(3) to treat an accepted Form 3, 4 or 5 filing in the same manner as a Rule 462(b) filing for purposes of the deemed filing date?

• Would this treatment be appropriate due to the rapid filing deadline applicable to Section 16 reports and the large proportion of insiders who are natural persons?

• On the other hand, does the importance of the information justify the requirement that these forms be filed by 5:30 p.m. on the due date, the same as almost all other Commission filings?

Question regarding elimination of electronic transmission alternative:

• Finally, we request comment on whether there is any category of filers who would be unduly burdened if we eliminate filers' ability to file on magnetic cartridge.

III. The Electronic Filing Procedure

By the time the provisions that require electronic filing of Forms 3, 4 and 5 become effective, a new on-line filing system will be effective as well.[68] In its initial version, insiders and those who act on their behalf will be able to access our web site to fill out and submit the forms. When the new system is implemented, EDGARLink filing no longer will be available for these forms.[69]

Some filers, either directly or through agents, may wish to create a customized form and file it as a reduced content filing. A reduced content filing is a filing that provides header information (*e.g.*, form type) and the data for mandatory fields that we specify and otherwise complies with specified technical filing requirements. We plan to announce the mandatory fields and technical filing requirements sufficiently before the new system's implementation to provide adequate preparation time. Reduced content filings will enable issuers and insiders to use third-party service providers for filings, if they wish to do so, just as they do today.

In order to file, persons will need the same codes that are required to file on EDGAR today.[70] Persons only can acquire the codes by submitting a Form ID.[71] Companies and other third party filing agents with the appropriate access codes will continue to be able to submit forms on behalf of insiders. We expect to introduce enhanced verification procedures in the future.

To access and file the forms through our web site, filers must begin by having valid EDGAR access codes and logging on to the site. A button on the menu will give filers the option to create on-line Forms 3, 4 or 5, or amendments to these forms. The filer should have all the necessary information available before going on-line to file. Due to cost and technical limitations, data entry must be performed quickly enough to avoid timeouts that end the session. The system will not be able to provide a way to save an incomplete form on-line from session to session. The system will validate for data type and required fields as many fields as possible while the filer fills in the form. Filers will have the chance to correct errors and verify the accuracy of the information. An on-line help function will be available.

The filer will be able to download and print the filing and add attachments before submission.[72] Once the filing is submitted, the system will display the accession number of the filing or a message that says the accession number will follow in a return notification.[73] A filer will be able to obtain a return copy of the form shortly after filing, and also will be able to see the filing on our website.

IV. General Request for Comments

We request and encourage any interested person to submit comments regarding:

• The proposed changes that are the subject of this release;

• Additional or different changes; or

• Other matters that may have an effect on the proposals contained in this release.

We request comment from the point of view of investors, insiders, issuers and others who use or otherwise are involved with electronic filing and website posting. With regard to any comments, we note that comments are of greatest assistance to our rulemaking initiative if accompanied by supporting data and analysis of the issues addressed in those comments.

V. Paperwork Reduction Act

The proposed rule amendments would affect seven forms that contain ''collection of information'' requirements within the meaning of the Paperwork Reduction Act of 1995.[74] The titles of the affected information collections are the EDGAR Forms ID, ET, SE[75] and TH,[76] and Exchange Act Forms 3, 4 and 5. Consistent with the

[64] Rule 201(b) of Regulation S–T [17 CFR 232.201(b)].

[65] Rule 13(a)(2) of Regulation S–T [17 CFR 232.13(a)(2)].

[66] 17 CFR 230.462(b).

[67] Rule 13(a)(3) of Regulation S–T [17 CFR 232.13(a)(3)].

[68] Commenters on both accelerated Section 16 filing and the Form 8–K Proposing Release encouraged the Commission to develop an on-line filing procedure for Section 16(a) reports.

[69] Unofficial PDF copies of these forms will not be permitted.

[70] If a filing is made on behalf of multiple insiders, each insider will be required to have a Central Index Key (CIK) and CIK Confirmation Code (CCC) for validation. Multiple insiders will be allowed on a single form if they all have an interest in the transaction(s) reported.

[71] 17 CFR 239.63, 249.446, 259.602, 269.7 and 274.402.

[72] Filers should reference attachments in the form as exhibits and number them for clarity. In the rare event that a filer files an exhibit alone in paper under a hardship exemption, the filer should place a Form SE [17 CFR 239.64, 249.444, 259.603, 269.8 and 274.403] cover on the exhibit. Use of Form SE for this purpose will help assure the exhibit is linked to the form.

[73] An ''accession number'' is a unique number generated by EDGAR for each electronic submission. Assignment of an accession number does not mean that EDGAR has accepted a submission.

[74] 44 U.S.C. 3501 *et seq.*

[75] 17 CFR 239.64.

[76] 17 CFR 239.65.

will of Congress, the amendments that affect all of these information collections, except for Form ET, generally conform the amended rules and forms to the mandated electronic filing requirements provided by the amendments to Section 16(a) enacted in Section 403 of the Sarbanes-Oxley Act.

Compliance with the proposed amendments would be mandatory. The information required by the proposed amendments would not be kept confidential by the Commission except that the information required by Form ID would be kept confidential, subject to a request under the Freedom of Information Act.[77]

An agency may not conduct or sponsor, and a person is not required to respond to, a collection of information unless it displays a currently valid control number. We have submitted the revisions to the collections of information to the Office of Management and Budget (''OMB'') for review under 44 U.S.C. 3507(d) and 5 CFR 1320.11.

Form ID (OMB Control Number 3235–0328) is used by registrants, individuals, third party filers or their agents to request the assignment of access codes that permit the filing of securities documents on EDGAR. This form enables the Commission to assign an identification number (''CIK''), confirmation code (''CCC''), password (''PW'') and password modification authorization code (''PMAC'') to each EDGAR filer, each of which is essential to the security of the EDGAR system.

Form ET (OMB Control Number 3235–0329) is used by an EDGAR filer when submitting filings on magnetic cartridge. The information provided on Form ET is technical information about the magnetic cartridge contents as well as information that identifies a contact person who can answer questions about the tape cartridge.

Form SE (OMB Control Number 3235–0327) is used by an EDGAR filer when submitting paper format exhibits either under a hardship exemption under Regulation S–T Rules 201 and 202 or as otherwise allowed by Regulation S–T. The information provided on a Form SE primarily identifies each paper format exhibit submitted. A Form SE filer must also submit the required number of copies of each paper format exhibit.

Form TH (OMB Control Number 3235–0425) is used by an EDGAR filer to give notice that it claims a temporary hardship exemption under Regulation S–T Rule 201. A filer must submit the Form TH along with the required number of copies of the paper format securities document. The information provided on Form TH enables the Commission to determine whether the filer's circumstances justify the grant of a temporary hardship exemption.

Form 3 (OMB Control No. 3235–0104) is used by an insider to disclose securities ownership information under Exchange Act Section 16(a).

Forms 4 (OMB Control No. 3235–0287) and 5 (OMB Control No. 3235–0362) are used by insiders to disclose securities transaction information under Exchange Act Section 16(a).

We estimate that approximately 8,000 respondents file Form ID each year at an estimated .15 hours per response for a total annual burden of 1200 hours.[78] We expect that, if adopted, the proposed rule amendments would cause an additional 216,000 respondents to file a Form ID as a result of initially being subject to the mandated filing rules and cause an additional 175,200 respondents to file a Form ID each year on a recurrent basis. We anticipate these additional entities would require 32,400 and 26,280 hours, respectively, in the aggregate to complete the Form ID, which would increase the total annual burden initially to 33,600 hours and, on a recurrent basis, to 27,480 hours.

We estimate that one entity files a Form ET each year at an estimated .25 hours per response for a total annual burden of .25 hours. We expect that the elimination of the Form ET cover sheet for magnetic cartridge filings in connection with the elimination of the magnetic cartridge transmission alternative will reduce the existing information collection requirements that are currently imposed on magnetic cartridge filers. We expect the annual burden would be reduced by the current annual burden imposed by Form ET. As noted above, we estimate this annual burden as .25 hours.

We estimate that 770 respondents file Form SE each year at an estimated .10 hours per response for a total annual burden of 77 hours. We expect that, if adopted, the proposed rule amendments would cause an additional 12 respondents to file a Form SE. We anticipate these additional respondents would require 1.2 hours in the aggregate to complete the Form SE, which would increase the total annual burden to 78.2 hours.

We estimate that 70 respondents file Form TH each year at an estimated .33 hours per response for a total annual burden of 23.1 hours. We expect that, if adopted, the proposed rule amendments would cause an additional 12 respondents to file a Form TH. We anticipate these additional respondents would require 4 hours in the aggregate to complete the Form TH, which would increase the total annual burden to 27.1 hours.

We expect that, if adopted, the proposed amendments would obligate reporting persons to disclose on Forms 3, 4 and 5 essentially the same information that they are required to disclose today.[79] We therefore believe that the overall information collection burden of these forms would remain approximately the same.

We are soliciting comment on the expected Paperwork Reduction Act effects of the proposed rule amendments. In particular, we solicit comment on the accuracy of our additional burden hour estimates expected to result from the proposed amendments. We further request comment on whether the proposed changes to the collection of information are necessary for the proper performance of the Commission's functions, including whether the additional information garnered will have practical utility. In addition, we solicit comment on whether there are ways to enhance the quality, utility, and clarity of the information to be collected. We further solicit comment on whether there are ways to minimize the burden of information collection on those insiders who file the above forms, including through the use of automated collection techniques or other forms of information technology. Finally, we solicit comment on whether the proposed amendments will have any effects on any other collection of information not previously identified in this section.

If you would like to submit comments on the collection of information requirements and expected effects, please direct them to the Office of Management and Budget, Attention: Desk Officer for the Securities and Exchange Commission, Office of Information and Regulatory Affairs, Washington, DC, 20503. You should also send a copy of the comments to Jonathan G. Katz, Secretary, Securities and Exchange Commission, 450 Fifth Street, NW., Washington, DC 20549,

[77] 5 U.S.C. 552. The Commission's regulations that implement the act are at 17 CFR 200.80 *et seq.*

[78] The fact that approximately 25% of the Forms 3, 4 and 5 filed in November 2002 were filed electronically indicates that some insiders already have filed Forms ID.

[79] The addition to Form 5 of a requirement to provide the day of the month and year disclosed where the month and year already are required to be disclosed creates an additional burden that is so small it is not quantifiable. The other proposed changes to Forms 3, 4 and 5 are minor and do not add any collection of information burden.

with reference to File No. S7–52–02. Requests for materials submitted to OMB by the Commission with regard to these collections of information should be in writing, refer to File No. S7–52–02, and be submitted to the Securities and Exchange Commission, Records Management, Office of Filings and Information Services. OMB must make a decision concerning the affected collections of information between 30 and 60 days after publication of the release. Consequently, in order to ensure that your comments achieve their fullest effect, you should submit comments to OMB within 30 days of this release's publication.

VI. Cost-Benefit Analysis

The proposed amendments relating to mandated electronic filing and website posting largely represent the implementation of a Congressional mandate. We expect that these amendments will achieve the same benefits for investors and filers that we sought when we first adopted mandated EDGAR rules for most filings.[80]

A. Expected Benefits

The proposed amendments regarding mandated electronic filing and website posting should benefit investors and filers.

Mandated electronic filing should benefit members of the investing public and financial community by making information contained in Commission filings easily available to them minutes after receipt by the Commission and, thereby, make them more likely to access and act quickly on the information. The electronic format of the information should facilitate research and data analysis. The new accelerated Section 16(a) filing requirement described above should make quick electronic access even more valuable.

Filers should benefit from changes to the electronic filing system specifically designed to make electronic filing easier while continuing to provide speedy, secure and reliable delivery.

The use of EDGAR also will facilitate more efficient storage, retrieval and analysis of ownership and transaction information than filing in paper. Quicker access to ownership and transaction information should not only facilitate review of the information but also enhance the Commission's ability to study and address issues that relate to this information.

Website posting by issuers with corporate websites will provide a convenient, rapidly disseminated electronic source in addition to EDGAR that is conducive to research and data analysis. In general, website posting will help to make ownership and transaction information more broadly accessible.

B. Expected Costs

We expect that the proposed amendments regarding mandated electronic filing and website posting will result in some costs to insiders and issuers. However, we expect that many insiders and issuers will not bear the full range of costs resulting from the adoption of these amendments for the reasons described below.

The expected costs of mandated electronic filing consist of both initial and ongoing costs. Initial costs are those associated with obtaining, completing and sending to the Commission a Form ID to obtain filing credentials, and the purchase of compatible computer equipment and software, including EDGAR software if obtained from a third-party vendor and not the Commission's website. Initial costs further include those associated with learning about the electronic filing system, placing the filing data in electronic format for the initial electronic filing and subscribing to an Internet service provider. Ongoing costs are those associated with maintaining the framework developed through the initial costs (for example, updating information required by Form ID) and any additional costs arising from each subsequent filing (for example, placing the new filing data in electronic format).[81]

We expect that many insiders will need to incur few, if any, additional costs from electronic filing. We understand that many issuers help their insiders or make the insiders' filings for them. To the extent insiders do not receive this help, we believe many already will have the computer equipment and Internet access to enable them to file using the templates that will appear on the Commission's website. Finally, some insiders already have filed Forms ID and gained experience in arranging electronic filing.[82]

Even issuers that help their insiders, whether to a greater or lesser extent, to file electronically are not likely to incur additional costs.[83] Issuers are required to file on EDGAR and generally have the needed computer equipment and Internet service provider access to enable them to facilitate filing using the templates that will appear on the Commission's website.

Issuers should incur relatively few direct costs from the website posting requirement. Because the requirement applies only to issuers that already have a corporate website, issuers will not need to incur the costs associated with creating or maintaining a website. In addition, issuers could limit their additional costs associated with posting by hyperlinking to a third-party website such as EDGAR.

C. Comment Solicited

We solicit comments on the costs and benefits of the proposed amendments for insiders. We request your views on the costs and benefits described above as well as on any other costs and benefits that could result from adoption of mandated electronic filing and website posting requirements. We also request data as to what percentage of filings are done by or with the help of the issuer.

VII. Effect on Efficiency, Competition and Capital Formation

Section 23(a)(2) of the Exchange Act[84] requires us, when adopting rules under the Exchange Act, to consider the impact that any new rule would have on competition. In addition, Section 23(a)(2) prohibits us from adopting any rule that would impose a burden on competition not necessary or appropriate in furtherance of the purposes of the Exchange Act. Furthermore, Section 2(b) of the Securities Act[85] and Section 3(f) of the Exchange Act[86] require us, when engaging in rulemaking where we are required to consider or determine whether an action is necessary or appropriate in the public interest, to consider, in addition to the protection of investors, whether the action will promote efficiency, competition, and capital formation.

The proposed amendments regarding mandated electronic filing and website posting are intended to facilitate the more efficient transmission, dissemination, analysis, storage and

[80] The expected benefits and costs to those outside the Commission from the proposed amendments relating to eliminating Form ET and magnetic cartridge transmission are expected to be *de minimis*. Magnetic cartridge transmission rarely is used.

[81] Other minor costs could include, for example, filling out and submitting a Form SE (a paper exhibit cover) or, in rare instances, a Form TH (a notice of claim of hardship exemption that serves as a cover for a paper filing).

[82] As previously noted, approximately 25% of the Forms 3, 4 and 5 filed in November 2002 were filed electronically.

[83] Costs that issuers incur helping insiders are incurred voluntarily because the legal obligation to file rests solely on the insiders.

[84] 15 U.S.C. 78w(a)(2).

[85] 15 U.S.C. 77b(b).

[86] 15 U.S.C. 78c(f).

retrieval of insider ownership and transaction information.[87] This should improve investors' ability to make informed investment and voting decisions. Informed investor decisions generally promote market efficiency and capital formation. We believe the proposed amendments would not impose a burden on competition.

We request comment on whether the proposed amendments, if adopted, would impose a burden on competition. We also request comment on whether the proposed amendments, if adopted, would promote efficiency, competition and capital formation. Finally, we request commenters to provide empirical data and other factual support for their views if possible.

VIII. Initial Regulatory Flexibility Analysis

This Initial Regulatory Flexibility Analysis has been prepared in accordance with 5 U.S.C. 603. It relates to proposed amendments regarding mandated electronic filing and website posting of Forms 3, 4 and 5.[88]

A. Reasons for the Proposed Action

An issuer's insiders use Forms 3, 4 and 5 to report beneficial ownership of and trading in equity securities of the issuer. Consistent with the will of Congress, the proposed mandated electronic filing and website posting amendments generally conform the amended rules and forms to the mandated electronic filing and website posting requirements provided by the amendments to Section 16(a) enacted in Section 403 of the Sarbanes-Oxley Act. In addition, we believe the proposed amendments will benefit investors, filers and the Commission.

B. Objectives

Our objectives in proposing the mandated electronic filing and website posting amendments are to facilitate compliance with the will of Congress as reflected in amended Section 16(a) and to facilitate the more efficient transmission, dissemination, analysis, storage and retrieval of insider ownership and transaction information in a manner that will benefit investors, filers and the Commission.

C. Legal Basis

We are proposing the mandated electronic filing and website posting amendments under the authority set forth in Section 19(a) of the Securities Act,[89] Sections 3(b),[90] 16, 23(a) [91] and 35A [92] of the Exchange Act, Section 17(a) [93] of the Public Utility Act, Section 319 [94] of the Trust Indenture Act, Section 30(h) of the Investment Company Act of 1940, and Section 3(a) of the Sarbanes-Oxley Act.

D. Small Entities Subject to the Proposed Revisions

The proposed mandated electronic filing and website posting amendments would affect small entities that either are insiders that are not natural persons or are issuers with a corporate website that have a class of equity securities registered under Exchange Act Section 12. Exchange Act Rule 0–10(a) [95] defines an entity, other than an investment company, to be a ''small business'' or ''small organization'' if it had total assets of $5 million or less on the last day of its most recent fiscal year. As of September 30, 2002, we estimated that there were approximately 8,640 insiders [96] and fewer than 2,500 issuers that have a class of equity securities registered under Exchange Act Section 12, other than investment companies, that may be considered small entities. The proposed mandated electronic filing amendments would apply to all of these insiders. The proposed mandated website posting amendments would apply to all of these issuers with corporate websites.

E. Reporting, Recordkeeping and Other Compliance Requirements

Currently, insiders may file Forms 3, 4 and 5 in paper or electronically and issuers with corporate websites need not post Forms 3, 4 and 5 as to their equity securities on their websites. The amendments would require insiders to file these forms electronically and issuers with corporate websites to post these forms. Because insiders already file these forms in paper, the only additional professional skills insiders would need would be those required to file electronically. Because issuers with corporate websites already have websites, we believe these issuers would need no additional professional skills to post these forms on their websites. We expect that filing electronically and website posting would increase costs incurred by some small entities. However, we expect that many small entity insiders and small entity issuers will not bear the full range of costs resulting from the adoption of these amendments for the reasons described below.

The expected costs of mandated electronic filing consist of both initial and ongoing costs. Initial costs are those associated with obtaining, completing and sending to the Commission a Form ID to obtain filing credentials, and the purchase of compatible computer equipment and software, including EDGAR software if obtained from a third-party vendor and not the Commission's website. Initial costs further include those associated with learning about the electronic filing system, placing the filing data in electronic format for the initial electronic filing and subscribing to an Internet service provider. Ongoing costs are those associated with maintaining the framework developed through the initial costs (for example, updating information required by Form ID) and any additional costs arising from each subsequent filing (for example, placing the new filing data in electronic format).[97]

We expect that many small entity insiders will need to incur few, if any, additional costs from electronic filing. Some issuers may help their small entity insiders or make the small entity insiders' filings for them. To the extent small entity insiders do not receive this help, we believe many already will have the computer equipment and Internet access to enable them to file using the templates that will appear on the Commission's website. Finally, some small entity insiders already may have filed Forms ID and gained experience in arranging electronic filing.[98]

Even those small entity issuers that assist their insiders, whether to a greater or lesser extent, to file electronically are not likely to incur additional costs.[99] Small entity issuers are required to file on EDGAR and generally have the needed computer equipment and Internet service provider access to

[87] We believe there would be a *de minimis* impact from adoption of the proposed amendments regarding the elimination of magnetic cartridge transmission and Form ET.

[88] As previously noted, we believe there would be a *de minimis* impact from adoption of the proposed amendments regarding the elimination of magnetic cartridge transmission and Form ET.

[89] 15 U.S.C. 77s(a).

[90] 15 U.S.C. 78c(b).

[91] 15 U.S.C. 78w(a).

[92] 15 U.S.C. 78*ll*.

[93] 15 U.S.C. 78q(a).

[94] 15 U.S.C. 77sss.

[95] 17 CFR 240.0–10(a).

[96] We estimated the number of small entity insiders based on our estimates of the total number of insiders; the percentage of these insiders that are greater than ten percent holders; the percentage of these greater than ten percent holders that are non-natural persons; and the percentage of these non-natural persons that are small entities.

[97] Other minor costs could include, for example, filling out and submitting a Form SE (a paper exhibit cover) or, in rare instances, a Form TH (a notice of claim of hardship exemption that serves as a cover for a paper filing).

[98] Approximately 25% of the Forms 3, 4 and 5 filed in November 2002 were filed electronically.

[99] Costs that small entity issuers incur helping insiders are incurred voluntarily because the legal obligation to file rests solely on the insiders.

enable them to facilitate filing using the templates that will appear on the Commission's website.

Small entity issuers should incur relatively few direct costs from the website posting requirement. Because the requirement applies only to those small entity issuers that already have a corporate website, small entity issuers will not need to incur the costs associated with creating or maintaining a website. In addition, small entity issuers could limit their additional costs associated with posting by hyperlinking to a third-party website such as EDGAR.

F. Duplicative, Overlapping, or Conflicting Federal Rules

The proposed mandated electronic filing and website posting amendments would not duplicate, overlap, or conflict with other federal rules.

G. Significant Alternatives

The Regulatory Flexibility Act directs the Commission to consider significant alternatives that would accomplish the stated objective, while minimizing any significant adverse impact on small entities. In connection with the proposed mandated electronic filing and website posting amendments we considered the following alternatives:

- The establishment of differing compliance or reporting requirements or timetables that take into account the resources available to small entities;
- The clarification, consolidation, or simplification of filing or posting requirements;
- The use of performance rather than design standards; and
- An exemption from the electronic filing and website posting requirements, or any part of them, for small entities.

We believe that differing compliance or reporting requirements or timetables for small entities or a partial or complete exemption would be inconsistent with the will of Congress as reflected in amended Section 16(a) and the more efficient transmission, dissemination, analysis, storage and retrieval of insider ownership and transaction information in a manner that will benefit investors, filers and the Commission. We solicit comment, however, on whether differing compliance or reporting requirements or timetables for small entities would be consistent with the statutory mandate and described goals. We believe that the proposed electronic filing and website posting requirements are clear and straightforward. We are attempting to design an electronic filing system for these forms that will be simple for all filers to use. Therefore, it does not seem necessary to develop separate requirements for small entities. We have used design rather than performance standards in connection with the proposed electronic filing and website posting revisions because we want investors to know where to find the information and we want investors and the Commission to be able to analyze, store and retrieve the information involved. We also want the information disseminated to be in a form that is comparable between large and small issuers. We do not believe that performance standards for small entities would be consistent with the purpose of the proposed revisions.

H. Solicitation of Comments

We encourage commenters to submit comments with respect to any aspect of this Initial Regulatory Flexibility Analysis. In particular, we request comments regarding

- The number of small entity insiders and issuers that may be affected by the proposed revisions;
- The existence or nature of the potential impact of the proposed revisions on small entity insiders and issuers as discussed in the analysis; and
- How to quantify the impact of the proposed revisions.

We ask commenters to describe the nature of any impact and provide empirical data supporting the extent of the impact. These comments will be considered in the preparation of the Final Regulatory Flexibility Analysis, if the proposed revisions are adopted, and will be placed in the same public file as comments on the proposed amendments themselves.

IX. Small Business Regulatory Enforcement Fairness Act

For purposes of the Small Business Regulatory Enforcement Fairness Act of 1996 (''SBREFA''),[100] a rule is ''major'' if it has resulted, or is likely to result in:

- An annual effect on the economy of $100 million or more;
- A major increase in costs or prices for consumers or individual industries; or
- Significant adverse effects on competition, investment or innovation.

We request that commenters provide empirical data on (a) the annual effect on the economy; (b) any increase in costs or prices for consumers or individual industries; and (c) any effect on competition, investment or innovation. We also request comment on the reasonableness of this estimate.

[100] Pub. L. No. 104–121, Title II, 110 Stat. 857 (1996).

X. Statutory Basis

We are proposing the amendments to Regulation S–T, Rule 16a–3, and Forms 3, 4 and 5, and the removal of Form ET under the authority in Section 19(a) of the Securities Act, Sections 3(b), 16, 23(a) and 35A of the Exchange Act, Section 17(a) of the Public Utility Act, Section 319 of the Trust Indenture Act, Section 30(h) of the Investment Company Act of 1940, and Section 3(a) of the Sarbanes-Oxley Act.

Text of Proposed Rule Amendments

List of Subjects in 17 CFR Parts 230, 232, 239, 240, 249, 250, 259, 260, 269 and 274

Reporting and Recordkeeping requirements, Securities.

For the reasons set forth above, we propose to amend title 17, chapter II of the Code of Federal Regulations as follows.

PART 230—GENERAL RULES AND REGULATIONS, SECURITIES ACT OF 1933

1. The authority citation for Part 230 continues to read in part as follows:

Authority: 15 U.S.C. 77b, 77c, 77d, 77f, 77g, 77h, 77j, 77r, 77s, 77sss, 77z–3, 78c, 78d, 78*l*, 78m, 78n, 78o, 78t, 78w, 78*ll*(d), 78mm, 79t, 80a–8, 80a–24, 80a–28, 80a–29, 80a–30, and 80a–37, unless otherwise noted.

* * * * *

2. Amend § 230.110 by revising paragraph (b) to read as follows:

§ 230.110 Business hours of the Commission.

* * * * *

(b) *Submissions made in paper.* Paper documents filed with or otherwise furnished to the Commission may be submitted each day, except Saturdays, Sundays and federal holidays, from 8 a.m. to 5:30 p.m., Eastern Standard Time or Eastern Daylight Saving Time, whichever is currently in effect.

* * * * *

PART 232—REGULATION S–T—GENERAL RULES AND REGULATIONS FOR ELECTRONIC FILINGS

3. The authority citation for Part 232 continues to read, in part as follows:

Authority: 15 U.S.C. 77f, 77g, 77h, 77j, 77s(a), 77sss(a), 78c(b), 78*l*, 78m, 78n, 78o(d), 78w(a), 78*ll*(d), 79t(a), 80a–8, 80a–29, 80a–30 and 80a–37.

* * * * *

4. Amend § 232.12 by revising paragraph (b) to read as follows:

§ 232.12 Business hours of the Commission.

* * * * *

(b) *Submissions made in paper.* Filers may submit paper documents filed with or otherwise furnished to the Commission each day, except Saturdays, Sundays and federal holidays, from 8 a.m. to 5:30 p.m., Eastern Standard Time or Eastern Daylight Saving Time, whichever is currently in effect.

* * * * *

5. Amend § 232.101 by:

a. Revising paragraph (a)(1)(iii);

b. Removing paragraph (b)(4); and

c. Redesignating paragraphs (b)(5) through (b)(10) as paragraphs (b)(4) through (b)(9).

The revision reads as follows:

§ 232.101 Mandated electronic submissions and exceptions.

(a) * * *

(1) * * *

(iii) Statements, reports and schedules filed with the Commission pursuant to sections 13, 14, 15(d) or 16(a) of the Exchange Act (15 U.S.C. 78m, 78n, 78o(d) and 78p(a)), and proxy materials required to be furnished for the information of the Commission in connection with annual reports on Form 10–K (§ 249.310 of this chapter), or Form 10–KSB (§ 249.310b of this chapter) filed pursuant to Section 15(d) of the Exchange Act.

* * * * *

PART 239—FORMS PRESCRIBED UNDER THE SECURITIES ACT OF 1933

6. The authority citation for Part 239 continues to read, in part, as follows:

Authority: 15 U.S.C. 77f, 77g, 77h, 77j, 77s, 77z–2, 77sss, 78c, 78*l*, 78m, 78n, 78o(d), 78u–5, 78w(a), 78*ll*(d), 79(e), 79f, 79g, 79j, 79*l*, 79m, 79n, 79q, 79t, 80a–8, 80a–24, 80a–29, 80a–30 and 80a–37, unless otherwise noted.

* * * * *

7. Remove and reserve § 239.62 and remove Form ET.

PART 240—GENERAL RULES AND REGULATIONS, SECURITIES EXCHANGE ACT OF 1934

8. The authority citation for Part 240 continues to read, in part, as follows:

Authority: 15 U.S.C. 77c, 77d, 77g, 77j, 77s, 77z–2, 77z–3, 77eee, 77ggg, 77nnn, 77sss, 77ttt, 78c, 78d, 78f, 78g, 78i, 78j–1, 78k, 78k–1, 78*l*, 78m, 78n, 78o, 78p, 78q, 78s, 78u–5, 78w, 78x, 78*ll*, 78mm, 79q, 79t, 80a–20, 80a–23, 80a–29, 80a–37, 80b–3, 80b–4 and 80b–11, unless otherwise noted.

9. Amend § 240.0–2 by revising paragraph (b) to read as follows:

§ 240.0–2 Business hours of the Commission.

* * * * *

(b) *Submissions made in paper.* Paper documents filed with or otherwise furnished to the Commission may be submitted to the Commission each day, except Saturdays, Sundays and federal holidays, from 8 a.m. to 5:30 p.m., Eastern Standard Time or Eastern Daylight Saving Time, whichever is currently in effect.

* * * * *

10. Amend § 240.16a–3 by revising paragraph (h) and adding paragraph (k) to read as follows:

§ 240.16a–3 Reporting transactions and holdings.

* * * * *

(h) The date of filing with the Commission shall be the date of receipt by the Commission.

* * * * *

(k) Any issuer that maintains a corporate website shall post on that website by the end of the business day after filing any Form 3, 4 or 5 filed under Section 16(a) of the Act as to the equity securities of that issuer.

PART 249—FORMS, SECURITIES EXCHANGE ACT OF 1934

11. The authority citation for Part 249 continues to read in part as follows:

Authority: 15 U.S.C. 78a *et seq.*, unless otherwise noted.

* * * * *

§ 249.445 [Removed and Reserved]

12. Remove and reserve § 249.445 and Form ET.

PART 250—GENERAL RULES AND REGULATIONS, PUBLIC UTILITY HOLDING COMPANY ACT OF 1935

13. The authority citation for Part 250 continues to read as follows:

Authority: 15 U.S.C. 79c, 79f(b), 79i(c)(3), 79t, unless otherwise noted.

* * * * *

14. Amend § 250.21 by revising paragraph (b)(1) to read as follows:

§ 250.21 Filing of documents.

(a) * * *

(b) *Electronic filings.* (1) All documents required to be filed with the Commission under the Act or the rules and regulations thereunder must be filed at the principal office in Washington, DC via EDGAR by delivery to the Commission by direct transmission, via dial-up modem or Internet.

* * * * *

PART 259—FORMS PRESCRIBED UNDER THE PUBLIC UTILITY HOLDING COMPANY ACT OF 1935

15. The authority citation for Part 259 continues to read as follows:

Authority: 15 U.S.C. 79e, 79f, 79g, 79j, 79*l*, 79m, 79n, 79q, 79t.

* * * * *

§ 259.601 [Removed and Reserved]

16. Remove and reserve § 259.601 and Form ET.

PART 260—GENERAL RULES AND REGULATIONS, TRUST INDENTURE ACT OF 1939

17. The authority citation for Part 260 continues to read as follows:

Authority: 15 U.S.C. 77eee, 77ggg, 77nnn, 77sss, 78*ll*(d), 80b–3, 80b–4, and 80b–11.

* * * * *

18. Amend § 260.0–5 by revising paragraph (b) to read as follows:

§ 260.0–5 Business hours of the Commission.

* * * * *

(b) *Submissions made in paper.* Paper documents filed with or otherwise furnished to the Commission may be submitted to the Commission each day, except Saturdays, Sundays and federal holidays, from 8 a.m. to 5:30 p.m., Eastern Standard Time or Eastern Daylight Saving Time, whichever is currently in effect.

* * * * *

PART 269—FORMS PRESCRIBED UNDER THE TRUST INDENTURE ACT OF 1939

19. The authority citation for Part 269 continues to read as follows:

Authority: 15 U.S.C. 77ddd(c), 77eee, 77ggg, 77hhh, 77iii, 77jjj, 77sss, 78*ll*(d), unless otherwise noted.

* * * * *

§ 269.6 [Removed and Reserved]

20. Remove and reserve § 269.6 and Form ET.

PART 274—FORMS PRESCRIBED UNDER THE INVESTMENT COMPANY ACT OF 1940

21. The authority citation for Part 274 continues to read in part as follows:

Authority: 15 U.S.C. 77f, 77g, 77h, 77j, 77s, 78c(b), 78*l*, 78m, 78n, 78o(d), 80a–8, 80a–24, 80a–26, and 80a–29, unless otherwise noted.

* * * * *

22. Amend Form 3 (referenced in § 249.103 and § 274.202) by:

a. Revising General Instruction 3(a);

b. Adding a note following General Instruction 3;

c. Revising General Instruction 6; and

d. Removing Item 3 and redesignating Items 4, 5, 6 and 7 to the information preceding Table I as Items 3, 4, 5 and 6 to the information preceding Table I.

The revisions and addition read as follows:

Note: The text of Form 3 does not and this amendment will not appear in the Code of Federal Regulations.

Form 3 Initial Statement of Beneficial Ownership of Securities

* * * * *

General Instructions

* * * * *

3. Where Form Must be Filed

(a) A reporting person must file this Form in electronic format via the Commission's Electronic Data Gathering Analysis and Retrieval System (EDGAR) in accordance with EDGAR rules set forth in Regulation S–T (17 CFR Part 232), except that a filing person that has obtained a hardship exception under Regulation S–T Rule 201 or 202 (17 CFR 232.201 or 232.202) may file the Form in paper. For assistance with technical questions about EDGAR or to request an access code, call the EDGAR Filer Support Office at (202) 942–8900. For assistance with questions about the EDGAR rules, call the Office of EDGAR and Information Analysis at (202) 942–2940.

* * * * *

Note: If filing pursuant to a hardship exception under Regulation S–T Rule 201 or 202 (17 CFR 232.201 or 232.202), file three copies of this Form or any amendment with the Securities and Exchange Commission, 450 5th Street, NW., Washington, DC 20549. (**Note:** Acknowledgement of receipt by the Commission may be obtained by enclosing a self-addressed stamped postcard identifying the Form or amendment filed.)

* * * * *

6. Additional Information

(a) If the space provided in the line items on the electronic Form is insufficient, use the space provided for footnotes. If the space provided for footnotes is insufficient, create a footnote that refers to an exhibit to the form that contains the additional information.

(b) If the space provided in the line items on the paper Form or space provided for additional comments is insufficient, attach another Form 3, copy of Form 3 or separate 8 ½ by 11 inch white paper to Form 3, completed as appropriate to include the additional comments. Each attached page must include information required in Items 1, 2 and 4 of the Form. The number of pages comprising the report (Form plus attachments) shall be indicated at the bottom of each report page (*e.g.*, 1 of 3, 2 of 3, 3 of 3).

(c) If additional information is not reported as provided in paragraph (a) or (b) of this instruction, whichever applies, it will be assumed that no additional information was provided.

* * * * *

23. Amend Form 4 (referenced in § 249.104 and § 274.203) by:

a. Revising General Instruction 2(a);

b. Adding a note following General Instruction 2;

c. Revising General Instruction 6;

d. Revising the form heading; and

e. Removing Item 3 and redesignating Items 4, 5, 6 and 7 to the information preceding Table I as Items 3, 4, 5 and 6 to the information preceding Table I.

The revisions and addition read as follows:

Note: The text of Form 4 does not and this amendment will not appear in the Code of Federal Regulations.

Form 4 Statement of Changes in Beneficial Ownership of Securities

* * * * *

General Instructions

* * * * *

2. Where Form Must Be Filed

(a) A reporting person must file this Form in electronic format via the Commission's Electronic Data Gathering Analysis and Retrieval System (EDGAR) in accordance with EDGAR rules set forth in Regulation S–T (17 CFR Part 232), except that a filing person that has obtained a hardship exception under Regulation S–T Rule 201 or 202 (17 CFR 232.201 or 232.202) may file the Form in paper. For assistance with technical questions about EDGAR or to request an access code, call the EDGAR Filer Support Office at (202) 942–8900. For assistance with questions about the EDGAR rules, call the Office of EDGAR and Information Analysis at (202) 942–2940.

* * * * *

Note: If filing pursuant to a hardship exception under Regulation S–T Rule 201 or 202 (17 CFR 232.201 or 232.202), file three copies of this Form or any amendment with the Securities and Exchange Commission, 450 5th Street, NW., Washington, DC 20549. (**Note:** Acknowledgement of receipt by the Commission may be obtained by enclosing a self-addressed stamped postcard identifying the Form or amendment filed.)

* * * * *

6. Additional Information

(a) If the space provided in the line items on the electronic Form is insufficient, use the space provided for footnotes. If the space provided for footnotes is insufficient, create a footnote that refers to an exhibit to the form that contains the additional information.

(b) If the space provided in the line items on the paper Form or space provided for additional comments is insufficient, attach another Form 4, copy of Form 4 or separate 8½ by 11 inch white paper to Form 4, completed as appropriate to include the additional comments. Each attached page must include information required in Items 1, 2 and 4 of the Form. The number of pages comprising the report (Form plus attachments) shall be indicated at the bottom of each report page (*e.g.,* 1 of 3, 2 of 3, 3 of 3).

(c) If additional information is not reported as provided in paragraph (a) or (b) of this instruction, whichever applies, it will be assumed that no additional information was provided.

* * * * *

Form 4 Statement of Changes in Beneficial Ownership of Securities

* * * * *

24. Amend Form 5 (referenced in § 249.105) by:

a. Revising General Instruction 2(a);

b. Adding a note following General Instruction 2;

c. Revising General Instruction 6;

d. Removing Item 3 and redesignating Items 4, 5, 6 and 7 to the information preceding Table I as Items 3, 4, 5 and 6;

e. Revising newly redesignated Items 3 and 4 to the information preceding Table I; and

f. Revising the heading for Table II and column 9 in Table II.

The revisions and addition read as follows:

Note: The text of Form 5 does not and this amendment will not appear in the Code of Federal Regulations.

Form 5 Annual Statement of Beneficial Ownership of Securities

* * * * *

General Instructions

* * * * *

2. Where Form Must Be Filed

(a) A reporting person must file this Form in electronic format via the Commission's Electronic Data Gathering Analysis and Retrieval System (EDGAR) in accordance with EDGAR rules set forth in Regulation S–T (17 CFR Part

232), except that a filing person that has obtained a hardship exception under Regulation S–T Rule 201 or 202 (17 CFR 232.201 or 232.202) may file the Form in paper. For assistance with technical questions about EDGAR or to request an access code, call the EDGAR Filer Support Office at (202) 942–8900. For assistance with questions about the EDGAR rules, call the Office of EDGAR and Information Analysis at (202) 942–2940.

* * * * *

Note: If filing pursuant to a hardship exception under Regulation S–T Rule 201 or 202 (17 CFR 232.201 or 232.202), file three copies of this Form or any amendment with the Securities and Exchange Commission, 450 5th Street, NW, Washington, DC 20549. (**Note:** Acknowledgement of receipt by the Commission may be obtained by enclosing a self-addressed stamped postcard identifying the Form or amendment filed.)

* * * * *

6. Additional Information

(a) If the space provided in the line items on the electronic Form is insufficient, use the space provided for footnotes. If the space provided for footnotes is insufficient, create a footnote that refers to an exhibit to the form that contains the additional information.

(b) If the space provided in the line items on the paper Form or space provided for additional comments is insufficient, attach another Form 5, copy of Form 5 or separate 8½ by 11 inch white paper to Form 5, completed as appropriate to include the additional comments. Each attached page must include information required in Items 1, 2 and 4 of the Form. The number of pages comprising the report (Form plus attachments) shall be indicated at the bottom of each report page (*e.g.,* 1 of 3, 2 of 3, 3 of 3).

(c) If additional information is not reported as provided in paragraph (a) or (b) of this instruction, whichever applies, it will be assumed that no additional information was provided.

* * * * *

Form 5

* * * * *

3. Statement for Month/Day/Year

4. If Amendment, Date of Original Month/Day/Year

* * * * *

Table II—Derivative Securities Acquired, Disposed of, or Beneficially Owned (*e.g.,* puts, calls, warrants, options, convertible securities)

* * * * *

9. Number of Derivative Securities Beneficially Owned at End of Issuer's Fiscal Year (Instr. 4)

* * * * *

§ 274.401 [Removed and Reserved]

24. Remove and reserve § 274.401 and Form ET.

By the Commission.

Dated: December 20, 2002.

J. Lynn Taylor,

Assistant Secretary.

[FR Doc. 02–32731 Filed 12–26–02; 8:45 am]

BILLING CODE 8010–01–P

Federal Register

Friday,
December 27, 2002

Part VIII

Department of Energy

Office of Energy Efficiency and Renewable Energy

Energy Efficiency Program for Certain Commercial and Industrial Equipment: Final Determinations Concerning the Petitions for Recognition of CSA International and Underwriters Laboratories Inc. as Nationally Recognized Certification Programs for Electric Motor Efficiency; Notices

DEPARTMENT OF ENERGY

Office of Energy Efficiency and Renewable Energy

[Docket No. EE–RM–96–400]

Energy Efficiency Program for Certain Commercial and Industrial Equipment: Final Determination Concerning the CSA International Petition for Recognition as a Nationally Recognized Certification Program for Electric Motor Efficiency

AGENCY: Office of Energy Efficiency and Renewable Energy; Department of Energy.

ACTION: Final determination.

SUMMARY: Today's notice announces the Department of Energy's final determination classifying the CSA International Motor Efficiency Verification Service Program as a nationally recognized certification program in the United States for the purposes of section 345(c) of the Energy Policy and Conservation Act.

DATES: This final determination is effective December 27, 2002.

FOR FURTHER INFORMATION CONTACT:

James Raba, U.S. Department of Energy, Office of Energy Efficiency and Renewable Energy, Mail Station EE–2J, 1000 Independence Avenue, SW., Washington, DC 20585–0121; Telephone: (202) 586–8654; Telefax: (202) 586–4617; or Electronic Mail: *jim.raba@ee.doe.gov.*

Francine Pinto, Esq., U.S. Department of Energy, Office of General Counsel, Mail Station GC–72, 1000 Independence Avenue, SW., Washington, DC 20585–0103; Telephone: (202) 586–7432; Telefax: (202) 586–4116; or Electronic Mail: *francine.pinto@hq.doe.gov.*

SUPPLEMENTARY INFORMATION:

I. Introduction
A. Authority
B. Background
II. Discussion
A. General
B. Application of Evaluation Criteria
1. Standards and Procedures for Conducting and Administering a Certification System
2. Independence
3. Operation of a Certification System in a Highly Competent Manner
a. General Operating Requirements (ISO/IEC Guide 65)
b. Guidelines for Corrective Action in the Event of Misapplication of a Mark of Conformity (ISO/IEC Guide 27)
c. General Rules for a Model Third-Party Certification System for Products (ISO/IEC Guide 28)
d. General Requirements for the Competence of Testing Laboratories (ISO/IEC Guide 25)
(1) Operating Procedures
(2) Testing Laboratory
4. Expertise in IEEE 112–1996 Test Method B and CSA C390–93 Test Method (1)
5. Sampling Criteria and Procedures for Selecting an Electric Motor for Energy Efficiency Testing
III. Final Determination

I. Introduction

On July 5, 2002, the Department of Energy (DOE or Department) published in the **Federal Register** an interim determination to classify CSA International's Motor Efficiency Verification Service Program (MEVS Program or Program) as a nationally recognized certification program for electric motor efficiency and solicited comments, data and information with respect to that interim determination. 67 FR 45018. The Department did not receive any comments concerning its interim determination.

A. Authority

Part C of Title III of the Energy Policy and Conservation Act (EPCA) contains energy conservation requirements for electric motors, including requirements for test procedures, energy efficiency standards, and compliance certification (42 U.S.C. 6311–6316). Section 345(c) of EPCA directs the Secretary of Energy to require motor manufacturers ''to certify, through an independent testing or certification program nationally recognized in the United States, that [each electric motor subject to EPCA efficiency standards] meets the applicable standard.'' 42 U.S.C. 6316(c). Regulations to implement this EPCA directive, with respect to certification programs, are codified in 10 CFR Part 431 at sections 431.123, *Compliance Certification,* 431.27, *Department of Energy recognition of nationally recognized certification programs,* and 431.28, *Procedures for recognition and withdrawal of recognition of accreditation bodies and certification programs.*

For a certification program to be classified by the Department as being nationally recognized, the program must: (1) Have satisfactory standards and procedures for conducting and administering a certification system, and for granting a certificate of conformity; (2) be independent; (3) be qualified to operate in a highly competent manner; (4) be expert in the test procedure and methodology in Institute of Electrical and Electronics Engineers (IEEE) Standard 112–1996 Test Method B and CSA Standard C390–93 Test Method (1), or similar procedures and methodologies for determining the energy efficiency of electric motors; and (5) have satisfactory criteria and procedures for selecting and sampling electric motors for energy efficiency testing. 10 CFR 431.27(b).

B. Background

Pursuant to 10 CFR 431.27, CSA International submitted a ''Petition for Recognition of CSA International as a Nationally Recognized Certification Program for Motor Efficiency'' (CSA International Petition or the Petition) which was published in the **Federal Register** on April 26, 2000. 65 FR 24429. The Petition consisted of a letter from CSA International to the Department, narrative statements on five subject areas, and supporting documentation. At the same time, the DOE solicited comments, data and information as to whether CSA International's Petition should be granted. The Department also conducted an independent investigation concerning the CSA International Petition pursuant to 10 CFR 431.28(f).

The supporting documents that accompanied the Petition, as well as the material CSA International subsequently submitted to the Department in support of the Petition, continue to be available in the Freedom of Information Reading Room, U.S. Department of Energy, Forrestal Building, Room 1E–190, 1000 Independence Avenue, SW., Washington, DC 20585–0101, telephone (202) 586–3142, between the hours of 9 a.m. and 4 p.m., Monday through Friday, except Federal holidays. Additional information about CSA International's MEVS Program and its Petition to be a nationally recognized certification program for electric motor efficiency can be obtained on the World Wide Web at *http://www.csa-international.org/welcome.html,* or from Mr. Otto Krepps, Manager, Accreditations, CSA International, 178 Rexdale Boulevard, Toronto, Ontario, Canada M9W 1R3; Telephone: (416) 747–2798; Telefax: (416) 747–4173; or Electronic Mail at *otto.krepps@csa-international.org.*

The Department initially received comments on the CSA International Petition from the following four manufacturers and one trade association with respect to the CSA International Petition: Sterling Electric, Inc. (Sterling), Baldor Electric Company (Baldor), Siemens Energy & Automation, Inc. (Siemens), GE Industrial Systems (GE), and the National Electrical Manufacturers Association (NEMA), dated May 16, May 22, May 23, May 24, and May 26, 2000, respectively. In general, Sterling, Baldor, and Siemens believed CSA International to be qualified to test and certify electric motors for energy efficiency, and favored national recognition in the United States of the CSA International

Program. GE and NEMA did not appear to state a position on national recognition, but instead commented on the appropriateness of CSA International's sampling plan. GE recommended CSA International use a process equivalent to the National Institute of Standards and Technology/ National Voluntary Laboratory Accreditation Program for determining the competency of a testing facility. NEMA asserted that the CSA International process of selecting motors for energy efficiency testing appeared to be burdensome to manufacturers.

After reviewing CSA's Petition as well as other applicable documents, including the public comments and facts found through its investigation, the Department issued its interim determination, which was published in the **Federal Register** on July 5, 2002, and notified CSA International in writing of that interim determination pursuant to 10 CFR 431.28(d). See 67 FR 45018. After review of any comments and information submitted in response to the interim determination, the Department is required to publish in the **Federal Register** an announcement of its final determination on the Petition. See 10 CFR 431.28(e). This notice sets forth DOE's final determination.

II. Discussion

A. General

For the Department to classify a certification program as ''nationally recognized,'' the program must meet the following criteria:

Sections 431.27(b)(1) and (c)(1) of 10 CFR Part 431 set forth criteria and guidelines for the standards and procedures for conducting and administering a certification system and for granting a certificate of conformity. As such, a certification program must have satisfactory standards and procedures for conducting and administering a certification system, including periodic follow-up activities to assure that basic models of electric motors continue to conform to the efficiency levels for which they were certified and for granting a certificate of conformity. International Standards Organization/International Electrotechnical Commission (ISO/IEC) Guide 65 (discussed in 10 CFR 431.27(c)(3) and also below) sets forth the general requirements intended to ensure a certification program is operated in a consistent and reliable manner. These requirements address: (1) Impartiality; (2) sufficient personnel having the necessary education, training, technical knowledge and experience; (3) relevant procedures for sampling, testing and inspecting the product, and the means necessary to evaluate conformance by a manufacturer with those standards; (4) surveillance and periodic audits to ensure continued conformance with the applicable standards; (5) subcontracting work, such as testing, with proper arrangements to ensure competence, impartiality, and compliance with the applicable standards; (6) procedures to control records, documents and data, including review and approval by appropriately authorized personnel; and (7) control over use and display of certificates and marks of conformity.

Sections 431.27(b)(2) and (c)(2) of 10 CFR Part 431 set forth criteria and guidelines for independence. A certification program must be independent of electric motor manufacturers, importers, distributors, private labelers or vendors. It cannot be affiliated with, have financial ties with, be controlled by, or be under common control with any such entity. Further, it should disclose any relationship it believes might appear to create a conflict of interest. ISO/IEC Guide 65 sets forth requirements for a certification program to be impartial, and requires that a program have a documented structure that safeguards impartiality. For example, each decision on certification is made by a person(s) different from those who carried out an evaluation or actual testing of the motor. A certification program's policies and procedures must distinguish between product certification and other activities; its certification process must be free from any commercial, financial and other pressures that might influence decisions; and it must have a committee structure where members are chosen to provide a balance of affected interests.

Sections 431.27(b)(3) and (c)(3) of 10 CFR Part 431 set forth criteria and guidelines requiring that a certification organization must be qualified to operate a certification system in a highly competent manner. Of particular relevance is documentary evidence that establishes experience in the application of guidelines contained in ISO/IEC Guide 65: 1996, *General requirements for bodies operating product certification systems*, ISO/IEC Guide 27: 1983, *Guidelines for corrective action to be taken by a certification body in the event of either misapplication of its mark of conformity to a product, or products which bear the mark of the certification body being found to subject persons or property to risk*, ISO/IEC Guide 28: 1982, *General rules for a model third-party certification system for products*, as well as experience in overseeing compliance with the guidelines contained in the ISO/IEC Guide 25: 1990, *General requirements for the competence of calibration and testing laboratories.*

Sections 431.27(b)(4) and (c)(4) of 10 CFR Part 431 set forth criteria and guidelines requiring that a certification program must be expert in the content and application of the test procedures and methodologies in IEEE Standard 112–1996 Test Method B and CSA Standard C390–93 Test Method (1). Of particular relevance would be documentary evidence that establishes experience in the application of guidelines contained in the ISO/IEC Guide 25.

ISO/IEC Guide 25 addresses general requirements for establishing quality systems in laboratories and for recognizing their competence to carry out specified tests. In part, these requirements address standards and procedures for ensuring that: (1) Organization and management that are free from commercial, financial, and other pressures which might adversely affect quality of work; (2) there is independence of judgment and integrity; (3) supervision is provided by persons familiar with the applicable test procedures; (4) a quality system, and a manual which contains procedures for control and maintenance of documents, and procedures for periodic audit and review are all in place; (5) there are sufficient personnel having the necessary education, training, technical knowledge and experience for their assigned functions, and training of its personnel is kept up-to-date; (6) all items of equipment and reference materials for the correct performance of tests are available and used, and equipment is properly maintained and calibrated; (7) test equipment is calibrated and verified prior to operation, and there is traceability to national standards of measurement; (8) documented instructions for the use and operation of equipment, manuals, and applicable test procedures are in place; (9) testing records with sufficient information to permit repetition of a test are retained; and (10) where a laboratory is sub-contracted to conduct testing, that laboratory complies with the requirements contained in ISO/IEC Guide 25 and is competent to perform the applicable testing activities. An example of a ''sub-contracted'' laboratory would be a manufacturer's laboratory that tests motors for energy efficiency under the CSA International MEVS Program.

Also, where 10 CFR 431.27(b)(4) requires a certification program to have satisfactory criteria and procedures for the sampling and selection of electric

motors, likewise, ISO/IEC Guide 25 requires the use of documented sampling procedures and appropriate techniques to select samples.

B. Application of Evaluation Criteria

1. Standards and Procedures for Conducting and Administering a Certification System

Sections 431.27(b)(1) and (c)(1) of 10 CFR Part 431, and ISO/IEC Guide 65, set forth criteria and guidelines for the standards and procedures to be used in administering a certification system and granting a certificate of conformity.

The CSA International Petition asserted, in general, that its certification quality assurance program system is based on national and international accreditation requirements and specific customer requirements in order to ensure technical excellence, consistency of interpretation, application of standards, programs and procedures, integrity of its ''Energy Efficiency Marking,'' and continuous improvement. CSA International asserted that it has implemented the requirements specified in the ISO/IEC Guide 65. Further, CSA International asserted that it has implemented the requirements specified in SCC/CAN P–3 and SCC/CAN P–4, which the Department understands are the Standards Council of Canada equivalents of ISO/IEC Guides 65 and 25, respectively. In order to substantiate these assertions, CSA International provided to the Department certain Divisional Quality Documents (DQDs) which contain the operating procedures and guidelines used by CSA International's staff in support of its MEVS Program.

In view of the above, the Department understands that the CSA International Program carries out the ISO/IEC Guides 65 and 25 requirements through its Quality Assurance System and DQD No. 050, ''Certification Division Quality Assurance Manual,'' DQD No. 200, ''Certification Program,'' DQD No. 306, ''Guidelines for Handling Complaints and Disputes,'' DQD No. 306.1, ''Customer Complaints,'' DQD No. 318, Guidelines for Handling Product Incidents Investigations,'' DQD No. 320, ''Factory Inspections,'' DQD No. 326, ''Handling of Non-conformances,'' and DQD No. 327, ''Corrective & Preventive Action,'' which provide necessary operating procedures and guidelines.

The Department's investigation found that the CSA International procedures for operating a certification system were very general in nature and could be satisfactorily applied to any certification program conducted by CSA International. This raised the issue as to whether the specific standards and procedures by which the CSA International Program operates in order to certify the energy efficiency of electric motors were adequate, properly documented, well established and maintained, understood, and in fact carried out by staff.

For example, according to section 4.8.2 of ISO/IEC Guide 65, the certification body shall establish procedures to control all documents and data that relate to its certification functions, and these documents shall be reviewed and approved by authorized personnel prior to being issued following initial development or subsequent amendment. The Department found that procedural documents used in the electric motor efficiency evaluation process, including witness testing by CSA International staff at non-CSA International facilities, and the sampling procedure to be used, were not marked with identification numbers and information such as date of issue, sources or authorities by which the documents were issued and approved, revision numbers, or a particular page from a set of pages. Consequently, the Department requested that CSA International submit documents relevant to the motor efficiency evaluation procedure that had been processed and approved by the CSA International Engineering Quality Assurance group. CSA International complied and submitted, under a letter dated June 14, 2001, the following DQDs:

Certification Division Quality/Management System Manual, DQD No. 050, dated October 4, 2000.

Guidelines for the Selection of Test and Measurement Equipment and Validation of Borderline Test Measurements, DQD No. 308, dated March 12, 2001.

Selection of Test and Measurement Equipment/Significant Parameters—CSA Energy Efficiency Verification Program for Three-Phase Induction Motors, DQD No. 308.01, dated March 12, 2001.

Witness Testing, DQD No. 316, dated January 22, 2001.

Electric Motor Efficiency Evaluation, DQD No. 384, dated January 23, 2001.

Application Process—CSA Energy Efficiency Verification Program for Three Phase Induction Motors, DQD No. 385, dated January 24, 2001.

Review of Work and Designation of Signatories, DQD No. 431, dated October 17, 2000.

The Department has examined the above documents and concluded that they provide evidence that the standards and procedures CSA International uses to conduct a motor efficiency verification program satisfy the requirements set forth in 10 CFR 431.27(b)(1). Nevertheless, the Department's December 20, 2001, electronic message to CSA International requested that CSA International clarify or make corrections to certain procedures and documents used in its MEVS Program. In sum, the Department requested that CSA International confirm or correct the following: (1) Confirm that DQD No. 308.01 refers to IEEE Standard 112–1996 Test Method B with the modifications described under appendix A to subpart B of 10 CFR Part 431, paragraph 2 subparagraph (2); and (2) correct DQD No. 385 to refer to C390–93 Test Method (1). Also, the Department requested that CSA International submit the following documents for examination: DQD No. 305—*Quality/Management System Audit Program*; DQD No. 313—*Guidelines on Retesting*; DQD No. 332—*Document Control Procedure*; DQD No. 424—*Technical Training*; DQD No. 425—*Periodic Technical and Process Review*; and DQD No. 513—*Factory Audit Report.*

CSA International's letter, dated March 1, 2002, addressed the above matters and submitted a revised copy of DQD No. 308.01, dated February 15, 2002, to confirm the reference to IEEE Standard 112–1996 Test Method (1) as set forth under appendix A to subpart B of 10 CFR Part 431, and a revised copy of DQD 385 that refers to C390–93 Test Method (1). CSA International's March 1 letter asserted that its MEVS Program operates pursuant to DQD No. 385, wherein fully qualified staff would visit each testing facility to witness the tests being performed, write a detailed report, and have the manufacturer sign an agreement to manufacture the product [motor] in accordance with the description in the report. Also, CSA International confirmed that there will be a minimum of one audit visit per year by certification staff.

CSA International also submitted, with its March 1, 2002, letter, DQD Nos. 305, 313, 320, 385, 424, 425 and 513. Furthermore, CSA International stated that DQD No. 332, *Document Control Procedure*, had been withdrawn from its Quality System and the Department should refer to DQD 050 section 1.5, ''Documentation System,'' section 6.0, ''Document Control,'' and section 12.0, ''Maintenance of Records.'' In view of the criteria and guidelines set forth in 10 CFR 431.27(b)(1) and (c)(1), and ISO/IEC Guide 65, the Department examined the above-referenced DQDs. In sum,

DQD No. 305 sets forth procedures and guidelines for staffing, organizing, and conducting audits of the CSA International quality system, including technical audits of testing facilities in accordance with ISO/IEC Guide 25. DQD No. 313 sets forth procedures and guidelines for witness retesting to ensure continued compliance with, for example, motor efficiency standards. DQD No. 320, *Factory Inspections*, sets forth guidelines for scheduling and conducting factory audits. DQD No. 385, *Electric Motor Efficiency Evaluation*, sets forth the process for evaluating the energy efficiency of three-phase induction motors and applies both to the regulations in Canada and the United States, including the scope, sampling methods, test procedures, alternative efficiency determination methods, and efficiency levels in 10 CFR Part 431. DQD No. 424, *Technical Training*, sets forth the policy and guidelines for the training of technical staff, which is an ongoing activity that is monitored, evaluated and documented in the individual's training record. DQD No. 425, *Periodic Technical and Process Review*, sets forth guidelines to ensure that technical, administrative and quality records are maintained and periodically reviewed by management. DQD No. 513 is a facility audit report form with provisions for sampling and compliance with standards. In addition, CSA International submitted DQD No. 510.02, *List of Fully Qualified Project Holders for the Motor Energy Verification Program*, dated February 28, 2002, and DQD No. 050, revised November 30, 2001, *CSA International Quality Management System Manual*, that supersedes DQD No. 332. CSA International's March 1, 2002, letter confirms that all compliance and follow up testing is witnessed by technically qualified staff.

The Department has examined the Petition and all other documents described above, and affirms its conclusion that the standards and procedures CSA International uses to conduct its MEVS Program satisfy the requirements set forth 10 CFR 431(b)(1) and (c)(1), and the guidelines contained in ISO/IEC Guide 65.

2. Independence

Sections 431.27(b)(2) and (c)(2) of 10 CFR Part 431, and ISO/IEC Guide 65, set forth criteria and guidelines for impartiality.

Under Section 2 of its Petition, entitled ''CSA International,'' CSA International provided an overview of its history and a copy of its incorporation document, by-laws, annual report and an organization chart. CSA International asserted that it is an independent organization, has no affiliation with manufacturers or suppliers of products submitted for certification, and provides a copy of its ''Statement of Independence'' to substantiate these claims. However, the Department understands that the CSA International Standards Division administers the development of voluntary consensus standards for safety matters that involve participation from electric motor manufacturers, while the Certification Division and Quality Management Institute provide conformity assessment programs that carry out laboratory testing certification and inspection of electric motors.

The Department's May 14, 2001, letter requested that CSA International submit to the Department any documents that set forth the policies and procedures that provide assurance of CSA International's independence from any relationship with a manufacturer, importer, or supplier which might create a conflict of interest with its MEVS Program. Also, the Department requested that CSA International provide an explanation as to why a direct or indirect relationship with a motor manufacturer, importer, or private labeler through (a) the combined energy efficiency and product safety certification processes, (b) status as a ''Certification Member,'' (c) membership on a CSA International technical or standards development committee, or (d) shared certification whereby a manufacturer could perform unwitnessed motor testing and submit a certification report to CSA International, would not compromise CSA International's independence or bias information presented to CSA International for the purposes of compliance with 10 CFR 431.27(b)(2).

CSA International submitted, under a letter dated June 14, 2001, the following documents of policy and procedures as further evidence of its independence from manufacturers, importers, distributors, private labelers or vendors:

Corporate Policy Manual, dated December 1, 1996.

Certification Division Policies and Practices Manual, dated February 1999.

Standards of Business Conduct, dated May 1993.

Annual Report 2000.

Statement of Independence, signed by the Vice President, Corporate Secretary of CSA International and a Commissioner of Oaths and Notary Public, Province of Ontario, Canada, dated June 4, 1998.

The Department has examined the above documents and affirms its conclusion that they provide sufficient evidence that the CSA International MEVS Program meets the requirements for independence which are set forth in 10 CFR 431.27(b)(2), and (c)(2). Its MEVS Program meets the guidelines for the objectivity and impartiality of technical persons and committees which are set forth in ISO/IEC Guide 65, including freedom from commercial pressures that might influence the results of the certification process, an organizational structure that provides a balance of affected interests, and procedures that assure each decision on certification is made by a person(s) different from those who carried out an efficiency evaluation or actual testing of a motor. Furthermore, CSA International's MEVS Program meets the ISO/IEC Guide 25 requirements for organization and management to ensure confidence that its independence of judgment and integrity are maintained at all times.

3. Operation of a Certification System in a Highly Competent Manner

Sections 431.27(b)(3) and (c)(3) of 10 CFR Part 431 require that the petitioner demonstrate that its certification program operates in a highly competent manner by establishing its experience in the application of certain ISO/IEC Guides, including ISO/IEC Guides 65, 27 and 28, as well as experience in overseeing compliance with the guidelines in ISO/IEC Guide 25.

Section 3 of the CSA International Petition, ''Certification Division Quality Assurance Manual,'' stated that ''CSA International has implemented the requirements specified in ISO/IEC Guide 65, General requirements for bodies operating product certification systems.'' Furthermore, CSA International asserted that its Quality Assurance system is based, in part, on ISO/IEC Guide 25. Also, CSA International asserted that it has both implemented the requirements specified in SCC/CAN P–3 and SCC/CAN P–4, which the Department understands are the Standards Council of Canada equivalents of ISO/IEC Guides 65 and 25 respectively.

a. General Operating Requirements (ISO/IEC Guide 65)

The Department's letter to CSA International, dated May 14, 2001, requested evidence that, at a minimum, the initial determination as to whether an electric motor is in compliance with 10 CFR 431.42(a) is in fact witnessed by CSA International staff and procedures are in place for regular quality audits of all inspections and testing.

CSA International submitted, by letter dated June 14, 2001, the following documents of policy and procedures as further evidence of its competency and expertise in operating a certification system: *Certification Division Policies and Practices Manual,* dated February 1999; *Certification and Testing Services Brochure;* DQD No. 050—*Certification Division Divisional Quality/ Management System Manual,* October 4, 2000; *Application for CSA Certification Services Agreement* Form; and DQD No. 301—*Guidelines for Certification Division Representation on Standards Committees,* dated March 31, 2001.

Also, CSA International submitted a copy of DQD No. 385, *Application Process—CSA Energy Efficiency Verification Program for Three Phase Induction Motors,* Attachment 1, paragraph 6, ''Qualification of a Manufacturers Testing Facilities,'' and paragraph 12, ''Follow-up Visits,'' which set forth guidelines for initial and subsequent evaluation of a manufacturer's testing facility. The Department understands that CSA International uses these guidelines in conjunction with DQD No. 316, *Witness Testing,* whereby qualified CSA International technical staff evaluate a manufacturer's motor testing laboratory and witness the testing of a motor for energy efficiency.

Also, the Certification Division of CSA International, in its June 14 letter, asserted that procedures are in place for regular quality inspections. Further, CSA International submitted DQD 385, Attachment No. 1, ''Guide to the CSA Energy Efficiency Verification Service,'' that states in paragraph 12.1 ''a minimum of one visit to each manufacturing plant will be carried out each year.''

The Department believes that the above documents provide evidence that procedures are in place for initial compliance testing that is witnessed by CSA International staff, and procedures are in place for regular quality inspections of manufacturers' facilities. Nevertheless, the Department's electronic message to CSA International, dated December 20, 2001, requested that CSA International confirm that all compliance and follow-up testing of motors for energy efficiency is witnessed by a technically qualified CSA International representative.

CSA International's letter, dated March 1, 2002, confirmed that ''all compliance and follow-up testing is witnessed by technically qualified staff.'' Further, CSA International submitted as evidence revised DQD No. 385, *Electric Motor Efficiency Evaluation,* dated February 28, 2002, and DQD No. 510.02, *List of Fully Qualified Project Holders for the Motor Energy Efficiency Verification Program,* dated February 28, 2002, to substantiate its assertion of witness testing. The Department has examined the above documents and affirms its conclusion that the standards and procedures CSA International uses to conduct its MEVS Program satisfy the requirements for training, expertise, and experience in operating a certification system which are set forth in 10 CFR 431.27(b)(3) and (c)(3), and ISO/IEC Guide 65.

b. Guidelines for Corrective Action in the Event of Misapplication of a Mark of Conformity (ISO/IEC Guide 27)

ISO/IEC Guide 27 identifies procedures which a certification program should consider in response to a reported misuse of its registered mark of conformity. According to paragraph 1.1(a) of ISO/IEC Guide 27, ''misuse'' may take a variety of forms, such as a mark of conformity appearing on a non-certified product. The Department construes this to mean the unauthorized use by a manufacturer or private labeler of the CSA International Motor Efficiency Verification Marking (Marking) on the nameplate of an electric motor or in advertising and promotional materials, including the display of a registered CSA Certification Mark on a counterfeit motor. Under ISO/IEC Guide 27, the certification program would then be required to have strong corrective procedures in place. Such corrective measures would depend upon the nature of the misuse and the desire by the certification program to protect the integrity of its mark.

The Department has examined the CSA International *Certification Division Policies and Practices Manual* and finds that it contains rules for authorized use of the CSA International Marking, and procedures that address unauthorized representation of certification of a product or process, and the measures that CSA International would take to protect the integrity of its marking. Also, the Department has examined sections 15.0, ''Control on Non-conformances,'' and 16.0, ''Corrective and Preventive Action,'' contained in the CSA International *Quality Management System Manual,* DQD 050, revised November 30, 2001. These sections establish policies and procedures to control CSA International services, within the CSA International ''Quality Management System,'' which do not conform to the specified requirements, prevent their unintended use, establish a system for taking appropriate actions to resolve actual or potential non-conformances, and apply suitable corrective and preventive actions. The Department affirms its conclusion that the CSA International Program satisfactorily follows the guidelines for corrective action to be taken by a certification organization in the event of misapplication of a mark of conformity to an electric motor, set forth in 10 CFR 431.27(c)(3) and ISO/IEC Guide 27.

c. General Rules for a Model Third-Party Certification System for Products (ISO/IEC Guide 28)

ISO/IEC Guide 28 addresses minimum guidelines for a third party certification system in determining conformity with product standards through sample selection, initial testing and assessment of a factory quality management system, follow-up surveillance, subsequent testing of samples from the factory, and the use of a mark of conformity. Furthermore, ISO/IEC Guide 28 requires a certification program operating at a national level, such as under section 345(c) of EPCA which requires manufacturers to certify compliance through a ''nationally recognized'' certification program, to have a suitable organizational structure and utilize personnel, equipment, and operating procedures that comply with the criteria for a testing laboratory in ISO/IEC Guide 25.

Consistent with the above ISO/IEC Guide 28 guidelines, Section 4 to the CSA International Petition, ''CSA International's Motor Efficiency Verification Program,'' described the CSA International MEVS as depending upon: (1) Satisfactory evaluation, sampling and testing to determine that the requirements of the applicable standard, for example CSA Standard C390–93, are met on a continuing basis; (2) identification of the critical features that affect motor efficiency; (3) initial motor qualification testing and follow-up re-testing to ensure continued compliance; (4) continued access to a manufacturer's facilities and records, product retesting and challenge testing; (5) annual follow-up inspections; (6) proper authorization to apply the CSA International Motor Efficiency Verification Service Marking; and (7) corrective action when a motor fails to comply.

In view of the above ISO/IEC 28 criteria, the Department examined the CSA International *Certification Division Policies and Practices Manual,* dated February 1999, *Quality Management System Manual,* DQD No. 050, dated November 30, 2001, *Management System Audit Program,* DQD No. 305, dated October 31, 2001, *Guidelines on Retesting,* DQD No. 313, dated November 19, 1999, *Selection of Test and Measurement Equipment/ Significant Parameters—CSA Energy*

Efficiency Verification Program for Three-Phase Induction Motors, DQD No. 308.1, dated February 15, 2002, *Factory Inspections,* DQD No. 320, dated January 27, 1999, *Electric Motor Efficiency Evaluation,* DQD No. 385, dated February 28, 2002, *Periodic Technical and Process Review,* DQD No. 425, dated October 3, 2000, and *Facility Audit Report,* DQD No. 513, Revision A. The Department finds that, in general, both ISO/IEC Guide 28, and the above-referenced CSA International documents address: (1) The basic conditions and rules for a manufacturer to obtain and retain a certificate of conformity or mark of conformity; (2) initial inspection of a motor factory and a manufacturer's quality management system; (3) sample selection; (4) initial testing; (5) product evaluation; (6) surveillance; (7) identification of conformity in the form of a certificate of conformity or mark of conformity; (8) withdrawal of a certificate or mark of conformity by the certification program; and (9) guidelines on corrective action for misuse of a certificate or mark of conformity. The Department affirms its conclusion that the CSA International Program satisfies the general guidelines for a model third-party certification system in 10 CFR 431.27(c)(3), and the guidelines set forth in ISO/IEC Guide 28.

The above-referenced DQD No. 050, *Quality Management System Manual,* DQD No. 385, *Electric Motor Efficiency Evaluation,* and DQD No. 308.01, *Selection of Test and Measurement Equipment/Significant Parameters—CSA Energy Efficiency Verification Program for Three-Phase Induction Motors,* provide general policies, practices and procedures that govern the conformity assessment services, and, in particular, those that relate to the electric motor efficiency certification program. The CSA International *Quality Management System Manual* addresses, for example, ''Quality System,'' ''Standards of Conduct,'' ''Organization,'' ''Periodic Technical and Process Review,'' ''Audit Program,'' ''Staff Training,'' ''Inspection, Measuring and Test Equipment,'' ''Maintenance of Records,'' and ''Certification and Testing Programs and Services.'' The *Electric Motor Efficiency Evaluation* addresses, for example, ''Operational Rules/Procedure,'' ''Evaluation,'' ''Qualification of Manufacturers Test Facilities, Test Audit,'' ''Marking Authorization,'' ''Follow-up Visits,'' ''Product Retesting,'' ''Electric Motor Efficiency Evaluation Procedure,'' ''MEEV—Sampling Procedure for U.S.,'' and ''Plan and Procedure Relative to Alternative Efficiency Determination Methods (AEDMs).'' *Selection of Test and Measurement Equipment/Significant Parameters—CSA Energy Efficiency Verification Program for Three-Phase Induction Motors* addresses, for example, the requirements of IEEE Standard 112–1996, Test Method B, with the modifications described under appendix A to subpart B of 10 CFR Part 431, the National Institute of Standards and Technology (NIST) Handbook 150–10 entitled, *Efficiency of Electric Motors,* and CSA C390–93 when selecting test and measurement equipment.

The Department has examined the contents of these manuals and affirms its conclusion that they satisfy the guidelines for conducting a model third-party certification program at the national level as applicable under 10 CFR 431.27(c)(3) and ISO/IEC Guide 28.

d. General Requirements for the Competence of Testing Laboratories (ISO/IEC Guide 25)

(1) Operating Procedures

Third party certification programs must have experience overseeing compliance with the guidelines contained in ISO/IEC Guide 25. ISO/IEC Guide 25 sets out the general requirements by which a laboratory must operate if it is to be recognized as competent to carry out specific tests.

According to Section 3 of the CSA International Petition, ''Certification Division Quality Assurance Manual,'' CSA International's ''Quality Assurance'' system is based on national and international accreditation requirements, one of which is ISO/IEC Guide 25. In view of ISO/IEC Guide 25, the Department examined the procedures and guidelines contained in CSA International's *Quality Management System Manual,* DQD No. 050, and the above DQD Nos. 385, 308.01 and 316 as they apply to the evaluation of an electric motor testing facility.

The Department finds that DQD No. 050 establishes the general policies, standards of conduct, procedures, guidelines and organization requirements for CSA International's quality program. These are based on national and international accreditation requirements such as ANSI Z34.1, *American National Standard for Certification—Third Party Certification Program,* EN 45004, *General Criteria for the Operation of Various Types of Bodies Performing Inspection,* ISO/IEC 17025, *General Requirements for the Competence of Testing and Calibration Laboratories,* ISO/IEC Guide 65, *General Requirements for Bodies Operating Product Certification Systems,* and NIST Handbook 150, *National Voluntary Laboratory Accreditation Program (NVLAP)—Procedures and General Requirements.* Furthermore, the Department finds that the Standards Council of Canada [1] lists CSA International as an accredited certification body in the area of its Energy Efficiency Verification Service and specifically identifies CSA C390, ''Energy Efficiency Test Methods for Three-Phase Induction Motors,'' which adds credence to the evidence that CSA International operates its certification program in a highly competent manner, including overseeing compliance with the guidelines contained in ISO/IEC Guide 25 to test electric motors for energy efficiency.

The Department finds that DQD No. 385 establishes the guidelines for CSA International's operation of its motor energy efficiency evaluation process in the United States pursuant to 10 CFR Part 431, including the test procedures, alternative efficiency determination methods, and sampling procedures in 10 CFR 431.23 and 431.24. Under DQD No. 385, a manufacturer's motor testing facility is required to have adequate controls in place to ensure manufacturing consistency and consistent product performance with respect to energy usage. Also, the testing facility is examined for the type and accuracy of test equipment, calibration, test procedures and measurement techniques, a system for documenting test results, and staff training. The Department finds that under DQD No. 385, the CSA International sampling procedure adheres to the sampling procedure in 10 CFR 431.24(b). Also, DQD No. 385 requires periodic audit of the test facility and calibration system. A minimum of one visit per year to a manufacturing plant is carried out by CSA International staff to monitor product control measures and testing facilities, and to conduct retesting. Furthermore, DQD No. 385 sets forth procedures that address Alternative Efficiency Determination Methods (AEDMs) in order to reduce testing burden and accommodate the large number of motors a manufacturer would produce. The CSA International procedures essentially follow the procedures for the substantiation of an AEDM as provided in 10 CFR 431.24(a)(3). The Department understands that CSA International uses these guidelines in conjunction with

[1] The Standards Council is a federal Crown corporation which has the mandate to coordinate and oversee the efforts of the National Standards System in Canada.

DQD No. 316, whereby qualified CSA International technical staff evaluate a manufacturer's motor testing laboratory and witness the testing of an electric motor for energy efficiency.

The Department finds that DQD No. 308.01 establishes guidelines that follow the requirements of IEEE Standard 112–1996 Test Method B, CSA Standard C390–93, and NIST Handbook 150–10, *Efficiency of Electric Motors,* when selecting test and measurement equipment that would be utilized for testing electric motors under the CSA Motor Efficiency Verification Service Program. These are the same procedures identified in 10 CFR 431.23.

The Department finds that DQD No. 316, *Witness Testing,* provides guidelines for evaluating and monitoring the capability of a testing facility, such as a manufacturer's motor efficiency testing facility for performing tests that are witnessed by CSA International technical staff. Under DQD No. 316, a motor manufacturer's testing facility is evaluated according to (1) the scope of the standard and test method that it utilizes, for example CSA Standard C390, (2) the technical capability of testing facility staff, ongoing training of that staff and maintenance of personnel records, (3) suitability of the testing environment, (4) suitability and accuracy of the test equipment that is to be used, (5) the system for calibrations and control of test methods, and (6) traceability of calibration to national standards. Also, DQD No. 316 requires examination of the manufacturer's quality system, proper supervision and control of testing, documentation control, and retention of records.

In addition to examining the underlying documentation that establishes the policies and procedures of the CSA International quality system and operating procedures for evaluating electric motors, the Department directly compared the requirements in ISO/IEC Guide 25 with CSA International's MEVS Program as it would apply to a manufacturer's motor testing laboratory under a certification program and found them to be consistent with each other. The Department found, for example:

- ISO/IEC Guide 25 sets forth requirements for organization and management of a testing laboratory to ensure proper supervision and integrity of data. Similarly, the CSA International Program requires examination of the manufacturer's quality system, proper supervision and control of testing, documentation control, and retention of records.
- ISO/IEC Guide 25 requires a manufacturer's testing laboratory to have a quality system with documented policies and procedures, such as for the organization and operation of a testing laboratory, traceability of measurements, calibration of equipment, test procedures used, procedures for corrective actions and audits. Similarly, the CSA International Program requires use of the test procedures and calibration of equipment set forth in 10 CFR 431.23 and the requirements of IEEE Standard 112–1996, Test Method B, with the modifications described in appendix A to subpart B of 10 CFR part 431, and CSA Standard C390–93. In addition, the CSA International Program requires use of the quality system set forth in NIST Handbook 150–10 when selecting test and measurement equipment, meeting significant calibration parameters for electric motor efficiency evaluation, and having traceability of calibrated equipment to national standards. Also, the CSA International Program requires periodic audits of the test facility and calibration system, whereby a minimum of one visit per year to a manufacturing plant is carried out by CSA International staff to monitor product control measures and testing facilities, to conduct retesting, and to take any corrective actions.
- ISO/IEC Guide 25 requires a manufacturer's testing laboratory to have sufficient personnel having the necessary education, training, technical knowledge and experience. Similarly, the CSA International Program evaluates the technical capability of the testing facility staff, staff training, and maintenance of personnel records.
- ISO/IEC Guide 25 requires the proper environment and equipment for performance of testing, and that such equipment is properly maintained and calibrated. Similarly, the CSA International Program requires the proper environment for testing, control of test methods, and suitable equipment that is accurate and properly calibrated and traceable to nationally recognized standards of measurement.
- ISO/IEC Guide 25 requires the testing laboratory to maintain a record system of original observations, calculations, reference to sampling procedures, and derived data sufficient to permit repetition of a test. Similarly, the CSA International Program requires that the test procedures be under documentation control, and that test records be current and properly maintained. Also, the CSA International sampling procedure is consistent with the sampling procedure set forth in 10 CFR 431.24(b).
- Both ISO/IEC Guide 25 and the CSA International Program require test reports that contain similar information.

In view of these comparisons, the Department affirms its belief, set forth in the interim determination, that CSA International's MEVS Program satisfies the requirement of 10 CFR 431.27(c)(3) for documentary evidence that establishes experience in operating a certification system and overseeing compliance with the guidelines for competence contained in ISO/IEC Guide 25 to test electric motors for energy efficiency.

(2) Testing Laboratory

Under Section 1, ''Designated Testing Facility,'' of the CSA International Petition, it is stated that ''as part of CSA International's Motor Energy Efficiency Verification Program we are using our Toronto test facility,'' and that ''the facilities of Toronto are used for testing the full range of motors up to 50 horsepower.'' Also, under Section 3, ''Certification Division Quality Assurance Manual,'' of the CSA International Petition, CSA International asserted that its Quality Assurance system is based, in part, on ISO/IEC Guide 25 and SCC/CAN P–4 that is the Standards Council of Canada equivalent of ISO/IEC Guide 25.

GE Industrial Systems' comments, dated May 24, 2000, recommended that a test facility, such as the ones used by CSA International which test motors for energy efficiency, should be established and maintained by a process equivalent to the National Institute of Standards and Technology/National Voluntary Laboratory Accreditation Program (NIST/NVLAP) as set forth in the NIST Handbook 150–10, ''Efficiency of Electric Motors.'' Also, GE Industrial Systems recommended that any organization that certifies the energy efficiency of electric motors participate in the NIST/NVLAP proficiency testing program in order to understand, document, and make known any variations among participating testing facilities.

The Department's investigation found that the CSA International testing facility in Toronto was not fully operational at the time of the CSA International Petition, and that the CSA International Program relies heavily on the manufacturer to provide most of the test data, including data for initial qualification based on sampling and testing motors for energy efficiency, that are not witnessed by CSA International staff. Nor was there clear evidence of what quality control exists for monitoring the validity of motor efficiency testing by a manufacturer.

Also, it appeared that the CSA International Program lacked sufficient staff to perform all the annual follow-up inspections, bi-annual retesting, cross-testing every three years, unannounced retesting, and challenge testing which it claimed would occur. The Department's May 14, 2001, letter requested that CSA International submit information concerning its Toronto motor testing facility, its oversight of testing performed at a motor manufacturer's facility, and procedures for regular quality audits of all inspections and testing for motor efficiency.

The Certification Division of CSA International, in its June 14, 2001 letter, asserted that the Toronto test facility is fully operational, initial compliance testing is witnessed by CSA International staff, and that procedures are in place for regular quality inspections of a manufacturer's motor testing laboratory. In view of the June 14 letter, the Department understands that CSA International uses the Laboratoire des technologies electrochimiques et des electrotechnologies d'Hydro-Quebec (LTEE) for testing motors over 50 horsepower, and acknowledges that the CSA International test laboratory in Toronto is capable of testing motors up to 50 horsepower. Also, the Department understands that LTEE, although not officially listed in the NIST/NVLAP *2001 Directory,* participates in the NIST/NVLAP Proficiency Testing Program.

Section 431.27 of 10 CFR Part 431 does not require a certification program to actually operate its own motor testing laboratory, nor is a laboratory operated or observed by a certification program required to be accredited. Nevertheless, the Department believes that a testing facility operated or observed by a certification program should follow the guidelines in ISO/IEC Guide 25 and in principle be reasonably close to conforming to the technical requirements of an accredited laboratory. The Department understands that, in general, the evaluation of a motor testing laboratory under an accreditation program includes an on-site assessment, proficiency testing, audit of a laboratory's policies and operational procedures, review of staff qualifications, checks of proper maintenance and calibration of test equipment, and records review. Likewise, the evaluation under the CSA International Program includes evaluation of the manufacturer's testing facility, control and maintenance and calibration of test equipment, factory audits for continued compliance, document control, periodic audits of the operational and technical consistency of the program, control of non-conformances, staff training, and witness testing. The Department believes that the goal of a third party certification program is to provide assurance that test results are accurate, valid, and capable of being replicated. Tests must be performed with a degree of oversight so that the results are not influenced by marketing and production concerns. The Department affirms its belief that the CSA International Program, while not identical to a laboratory accreditation program, nevertheless satisfactorily follows the ISO/IEC 25 Guidelines.

4. Expertise in IEEE Standard 112–1996 Test Method B and CSA Standard C390–93 Test Method (1)

Sections 431.27(b)(4) and (c)(4) of 10 CFR Part 431 set forth evaluation criteria and guidelines whereby personnel conducting a certification program should be expert and experienced in the content and application of IEEE Standard 112–1996 Test Method B and CSA Standard C390–93 Test Method (1), or similar procedures and methodologies for determining the energy efficiency of electric motors. The program must have satisfactory criteria and procedures for the selection and sampling of electric motors tested for energy efficiency, and provide documents that establish experience in applying the guidelines for confidence in testing laboratories contained in ISO/IEC Guide 25. Such guidelines address quality audits and reviews, personnel, equipment, test methods, sampling, and records.

Section 3, ''Certification Division Quality Assurance Manual,'' of the CSA International Petition, stated that its Quality Assurance system is based on national and international requirements that include ISO/IEC Guide 25. The Department understands that section 6, ''Personnel,'' of ISO/IEC Guide 25 sets forth general requirements for the training, technical knowledge, and experience of testing laboratory personnel. In sum, it states that the testing laboratory shall have sufficient personnel, having the necessary education, training, technical knowledge and experience for their assigned functions; training of personnel is kept up-to-date; and records on relevant qualifications, training, skills, and experience of the technical personnel shall be maintained.

The Department's investigation found that the technical qualifications of the CSA International staff involved in the MEVS Program were very limited with regard to electric motor construction, performance, and efficiency testing. Also, it appeared to the Department that CSA International has only one person that actually participates in the qualification of a motor manufacturer's test facility, witnesses testing, and both directs and evaluates compliance testing, cross testing, and retesting. Consequently, the Department requested that CSA International address its intention to assign additional expert staff to its MEVS Program, and submit evidence as to the nature and extent of training the current staff receives in order to maintain proficiency in the evaluation of motor design and construction, and the practice of efficiency testing.

CSA International, in its June 14, 2001 letter, asserted that it had identified additional staff for participation in the operation of its MEVS Program, additional training would be provided, and that it would ensure its staff resources are appropriate to the amount of work required by its Motor Efficiency Verification Program. On August 20, 2001, the Department received an electronic message from CSA International which identified additional staff, their credentials, and the associated training each would receive as part of its MEVS Program in order to fulfill the requirements set forth in 10 CFR 431.27(b)(4) and 431.27(c)(4). In sum, the Department understands that this training addresses electric motor construction, performance, and efficiency testing, and will become part of a regular training program. Also, the Department understands that certain technical staff will work under the direction of a CSA International senior engineer or qualified project leader.

In the Department's view, any technically qualified person could satisfy the criteria for expertise in the content, application and methodologies of the test procedures pursuant to 10 CFR 431.27 (b)(4) if that person: (1) Is proficient in the test methodology of IEEE Standard 112 Test Method B and CSA C390–93 Test Method (1); (2) is familiar with the electrical, mechanical and environmental capabilities of a testing laboratory system; (3) understands how to prepare and mount a motor for testing, which includes the connection and operation of the test equipment; (4) is competent in calibrating test equipment; and (5) is competent with data collection and analysis. CSA International's experience in standards development, testing and evaluation of motors to both U.S. and International safety and similar energy efficiency procedures and methodologies provide sufficient evidence of CSA International staff having the necessary proficiency and expertise to conduct energy efficiency

evaluations under ISO/IEC Guide 25. Thus, the Department affirms its belief that the credentials of the CSA International staff, regular additional training, and monitoring by CSA International management, satisfy the general requirements for the training, technical knowledge, and experience of testing laboratory personnel under 10 CFR 431.27(b)(4) and (c)(4).

5. Sampling Criteria and Procedures for Selecting an Electric Motor for Energy Efficiency Testing

Section 431.27(b)(4) of 10 CFR part 431 requires a certification organization to have satisfactory criteria and procedures for the selection and sampling of electric motors tested for energy efficiency. Based on the National Institute of Standards and Technology report, NISTIR 6092, ''Analysis of Proposals for Compliance and Enforcement Testing Under the New part 431: Title 10, Code of Federal Regulations,'' January 1998, which analyzed various criteria and sampling plans proposed for establishing compliance with the nominal full-load efficiency levels prescribed by EPCA, 42 U.S.C. 6313(b)(1), the Department determined that ''the NEMA proposal for compliance testing provides statistically meaningful sampling procedures.'' Moreover, the NIST analysis was extensive in order to determine whether a particular sampling plan would be valid for the purpose of establishing compliance with EPCA motor efficiency levels. Also, section 10.5 of ISO/IEC Guide 25 requires the use of documented procedures and appropriate statistical techniques to select samples.

Under section 4 of the Petition, entitled ''CSA International's Motor Efficiency Verification Program,'' CSA International described its process for the selection and sampling of electric motors to be tested for energy efficiency. CSA International asserted that the objective of its sampling process is to minimize manufacturers' tests, costs and time to market, while providing sufficient confidence that the series of motors verified meet the applicable energy efficiency standard. Further, CSA International conducts unannounced follow-up inspections, random motor retesting, and challenge testing to ascertain continued compliance with energy efficiency standards by a manufacturer. The Department understands that under the CSA International sampling program, a minimum of 5 basic models are required to be tested to verify the energy efficiency ratings of a series of motors. The basic models are selected so as to represent the complete range of motors within the series, which could require more than 5 basic models. Thereafter, 1 to 5 units of each basic model are tested. The average efficiency of the sample lot must equal or exceed the required nominal full load efficiency. Furthermore, CSA International's goal for verifying continued compliance is to retest high volume motors at least once every 2 years. Other motors of different frame series are retested as needed to ensure continued compliance. Also, the Department understands that under the CSA International retesting program, the initial sample lot is one motor, and if after retesting the result equals or exceeds the minimum result from the qualification tests, then no further samples would be required. If the result is less than the minimum result from the qualifying tests, then motor samples would be selected pursuant to the qualifying test procedure.

GE Industrial Systems' comments, dated May 24, 2000, asserted that there should be some understanding of the level of confidence CSA International believes appropriate for the efficiency data that is determined from testing, and the basis for that confidence level. GE Industrial Systems described the CSA International statistical approach to sampling of motors for testing as the selection and testing of 5 basic models with a sample size of 1 to 5. GE Industrial Systems asserted that a minimum sample selection to substantiate an Alternative Efficiency Determination Method [2] should be 5 randomly selected units of 5 basic models, in order to provide a look at the population and statistical variation in the basic model. Further, GE Industrial Systems asserted that frequent sampling over time is more appropriate to an assessment of design and manufacturing variables, and therefore an ongoing sampling program would be appropriate.

NEMA's comment, dated May 26, 2000, asserted that CSA International's sampling process appears to be more burdensome than required by the Department of Energy. NEMA did not elaborate on its comment.

In view of GE Industrial Systems' and NEMA's comments, the Department's investigation found confusing statements from CSA International concerning its intentions to substantiate a manufacturer's AEDMs, either (1) by analyzing and comparing a manufacturer's energy efficiency modeling methods to actual test measurements, or (2) through comparisons between a motor manufacturer's energy efficiency calculations on a software program and a CSA International software program. It was not clear to the Department that the CSA International Program would substantiate an AEDM in a manner that is consistent with 10 CFR 431.24(a)(3) and (4), whereby a manufacturer could test 5 units each of 5 basic models and use the test results to substantiate an AEDM. Furthermore, it was not clear that the CSA International sampling plan would be valid if the initial sample lot is one motor, nor was it clear that testing all the basic models that a manufacturer produces would not be unduly burdensome. The Department's May 14, 2001, letter requested that CSA International submit documents and other materials to substantiate that its motor sampling procedures are statistically valid, not unduly burdensome, and would provide sufficient confidence that the true mean energy efficiency of a particular basic model meets or exceeds the energy efficiency level that is displayed on the nameplate of a single unit. Further, the Department's letter requested that CSA International submit its plan and procedures to evaluate a manufacturer's AEDMs.

CSA International, in its June 14, 2001 letter, described its plan and procedures to evaluate a manufacturer's AEDMs, whereby CSA International would verify that the manufacturer's software energy efficiency calculations are in agreement with its independent calculated values using the methods described in CSA Standard C390. The Department understands that CSA International would use the test data measurements, and then (a) perform its own calculations to determine the efficiency of the tested motor and (b) match it with the manufacturer's calculated efficiency. If the two values are in agreement for all the motors tested, then CSA International would accept the manufacturer's efficiency calculation procedure as intended by 10 CFR 431.24(b)(3). In its June 14 letter, CSA International asserted that its sampling procedures for electric motor efficiency evaluations are statistically valid, use random selection, and result in

[2] Alternative Efficiency Determination Method (AEDM) means a method of calculating the total power loss and average is full load efficiency of an electric motor. See 10 CFR 43.1.2. Section 431.24(a)(1) of 10 CFR part 431 provides that the energy efficiency of a motor must be determined either by testing in accordance with the Department of Energy test procedure or application of an AEDM. Section 431.24(a)(3) of 10 CFR part 431 requires that, in sum, the accuracy and reliability of an AEDM must be substantiated through testing at least 5 basic models; and that the calculated total power loss for each basic model must be within plus or minus 10 percent of the mean total power loss determined from testing.

confidence levels such that the true mean energy efficiency of a basic model meets or exceeds the motor's represented energy efficiency level.

Furthermore, CSA International's DQD 384, *Electric Motor Efficiency Evaluation*, paragraph 6.2 and Attachment No. 2, *MEEV—Sampling Procedure*, dated January 23, 2001, set forth the CSA International sampling procedure whereby, in sum, CSA International staff selects a minimum of 5 basic models that represent a complete range of motors, and tests 1 to 5 units of those basic models to determine whether the average efficiency of the sample lot equals or exceeds the required efficiency rating. Also, the Department understood that CSA International was establishing a database to substantiate that the sampling plan is valid, uses random selection, and provides the required confidence limits. In view of the above-referenced sampling plan, the Department calculated that a manufacturer could be required to test only 5 motors (5 basic models multiplied by 1 unit equal 5 motors) to substantiate compliance for up to 113 basic models. The Department believed this approach was not statistically valid for the purposes of 10 CFR 431.24 and 431.27(b)(4).

On August 28, 2001, the Department received an electronic message from CSA International which set forth its ''Plan and Procedure Relative to Alternative Efficiency Determination Methods (AEDMs)'' (Plan and Procedure). In sum, CSA International asserted that it will require a motor manufacturer to submit predicted energy efficiency values that represent a group of motors. CSA International would then select a minimum of 5 basic models from that group, and 5 samples of each basic model, for testing to determine the correlation between the predicted efficiency and the tested efficiency. CSA International asserted that the individual and average efficiency of the motors tested shall be in accordance with 10 CFR 431.24(b)(2)(i) and (ii). Also, CSA International asserted that it will conduct periodic follow-up audits and testing witnessed by CSA International staff.

The Department finds that the above Plan and Procedure is consistent with 10 CFR 431.24(a)(1)–(4)(i). However, in item 3 of the Plan and Procedure, CSA International stated that ''tests may be performed at the manufacturer's previously evaluated testing facility with some testing witnessed by [CSA International] CSAI staff.'' This appeared to contradict the aforementioned CSA International policies and procedures in DQDs 385 and 316, and assertions by CSA International in its *Certification and Testing Services* booklet, that both initial compliance and periodic follow-up tests would be witnessed by qualified CSA International technical staff. The Department requested that CSA International confirm that the ''witness testing'' policies and procedures apply to initial and subsequent verification of a manufacturer's AEDMs.

On August 30, 2001, the Department received an electronic message from CSA International containing a revised sampling plan and procedure DQD 384, ''Attachment 2, MEEV—Sampling Procedure for U.S., Part 431—DOE Energy Efficiency Program for Motors,'' dated August 29, 2001, for motor compliance testing, substantiation of an AEDM, and retesting. The Department examined the above DQD 384 Attachment 2 and, in general, found it to be consistent with 10 CFR 431.24(a)(1)–(4)(i) and 431.24(b)(1). However, where the CSA International sampling procedures follow 10 CFR 431.24, the Department recommended that DQD 384 Attachment 2 clearly state that (1) the average full load efficiency of each basic model of electric motor must be determined either by testing or by the application of an Alternative Efficiency Determination Method, (2) the section entitled ''Samples Required for Motor Model Qualification Testing'' should be modified to read ''Samples of Units Required for Motor Model Qualification Testing,'' (3) the section entitled ''Selection of Basic Model Types to Represent a Group of Motors'' should be modified to read ''Selection of Basic Models for Testing,'' and (4) the specific example provided under ''Example Scope of Certification'' should be corrected to accurately depict the sampling guidelines that precede it in DQD 384 Attachment 2.

Also, DQD 384 Attachment 2, entitled ''Samples Required for Scheduled Motor Retesting,'' states: ''The initial retest sample lot shall consist of one motor. If the measured full load efficiency from retest meets or exceeds the lowest full load efficiency determined from the qualification testing, then no further samples are required for testing.'' It was not clear to the Department whether the ''lowest full load efficiency determined from the qualification testing'' referred to the results of actual tests or some other criterion. Consequently, the Department requested that the procedures to be used during retesting be clarified.

Moreover, the Department believes that the sampling procedures set forth in 10 CFR 431.24(b)(2)(i) and (ii) provide reasonable assurance that the average full load efficiency of the basic model being retested meets or exceeds the mandated efficiency level and, accordingly, may be applied during re-testings. The Department recommended that CSA International adopt these sampling procedures for retesting. Thus, when testing a sample size of one motor during retesting, the efficiency of that unit must not be less than the full load efficiency described in section 431.24(b)(2)(ii); and, when samples of two or more motors are tested during retesting, the average efficiency of the lot must not be less than the full load efficiency described in section 431.24(b)(2)(i) and, the lowest efficiency of any unit in the lot must not be less than the full load efficiency described in section 431.24(b)(2)(ii).

CSA International's letter, dated March 1, 2002, addressed the above recommendations. As such, the Department understands that DQD No. 384 and DQD No. 385 have been combined into one document, and have been revised to clarify the sampling and compliance requirements. Also, CSA International revised the above DQD No. 384, Attachment 2, *MEEV—Sampling Procedure* which is now DQD No. 385, Attachment 2, in order to incorporate the Department's above recommendations both for initial qualification testing and retesting. The Department has examined the above documents and affirms its conclusion that the standards and procedures CSA International uses to conduct sampling under its MEVS Program are consistent with 10 CFR 431.24 and 431.42, and satisfy the criteria for the selection and sampling of electric motors to be tested for energy efficiency under 10 CFR 431.27(b)(4).

III. Final Determination

On July 5, 2002, DOE published in the **Federal Register** an interim determination to classify CSA International's MEVS Program as a nationally recognized certification program for electric motor efficiency. At that time, the Department solicited comments, data and information with respect to that interim determination. 67 FR 45018. The Department did not receive any comments concerning its interim determination.

In view of CSA International's Petition and supporting documents, the public comments received concerning the Petition, the Department's independent investigation, CSA International's actions to correct the

defects the Department addressed as described above, and the fact no comments were submitted concerning the Department's interim determination, the Department concludes that the CSA International Motor Efficiency Verification Service Program satisfactorily meets the criteria in 10 CFR 431.27.

Therefore, the Department's final determination is to classify the CSA International Motor Efficiency Verification Service Program as nationally recognized in the United States for the purposes of section 345(c) of EPCA. This final determination is effective upon the publication of this notice in the **Federal Register**, notwithstanding the Department's final determination, in the event that the CSA International Motor Efficiency Verification Service Program fails to continue to meet the criteria in 10 CFR 431.27 for a nationally recognized certification program, the Department can withdraw recognition after following the procedural requirements in 10 CFR 431.28(g).

Issued in Washington, DC, on December 19, 2002.

David K. Garman,

Assistant Secretary, Energy Efficiency and Renewable Energy.

[FR Doc. 02–32533 Filed 12–26–02; 8:45 am]

BILLING CODE 6450–01–P

DEPARTMENT OF ENERGY

Office of Energy Efficiency and Renewable Energy

[Docket No. EE–RM–96–400]

Energy Efficiency Program for Certain Commercial and Industrial Equipment: Final Determination Concerning the Petition for Recognition of Underwriters Laboratories Inc. as a Nationally Recognized Certification Program for Electric Motor Efficiency

AGENCY: Office of Energy Efficiency and Renewable Energy; Department of Energy.

ACTION: Final determination.

SUMMARY: Today's notice announces the Department of Energy's final determination classifying the Underwriters Laboratories Inc. Energy Verification Service Program for Electric Motors as a nationally recognized certification program in the United States for the purposes of section 345(c) of the Energy Policy and Conservation Act.

DATES: This final determination is effective December 27, 2002.

FOR FURTHER INFORMATION CONTACT: James Raba, U.S. Department of Energy, Office of Energy Efficiency and Renewable Energy, Mail Station EE–2J, 1000 Independence Avenue, SW., Washington, DC 20585–0121. Telephone (202) 586–8654, Telefax (202) 586–4617, or: *jim.raba@ee.doe.gov.*

Francine Pinto, Esq., U.S. Department of Energy, Office of General Counsel, Mail Station GC–72, 1000 Independence Avenue, SW., Washington, DC 20585–0103, Telephone (202) 586–7432, Telefax (202) 586–4116, or: *francine.pinto@hq.doe.gov.*

SUPPLEMENTARY INFORMATION:

I. Introduction
A. Authority
B. Background
II. Discussion
A. General
B. Application of Evaluation Criteria
1. Standards and Procedures for Conducting and Administering a Certification System
2. Independence
3. Operation of a Certification System in a Highly Competent Manner
a. General Operating Requirements (ISO/IEC Guide 65)
b. Guidelines for Corrective Action in the Event of Misapplication of a Mark of Conformity (ISO/IEC Guide 27)
c. General Rules for a Model Third-Party Certification System for Products (ISO/IEC Guide 28)
d. General Requirements for the Competence of Testing Laboratories (ISO/IEC Guide 25)
4. Expertise in IEEE 112–1996 Test Method B and CSA C390–93 Test Method (1)
5. Sampling Criteria and Procedures for Selecting an Electric Motor for Energy Efficiency Testing
C. Other Matters
III. Final Determination

I. Introduction

On July 5, 2002, the Department of Energy (DOE or Department) published in the **Federal Register** an interim determination to classify Underwriters Laboratories Inc.'s Energy Verification Service Program for Electric Motors (UL EVS Program or Program) as a nationally recognized certification program for electric motor efficiency and solicited comments, data and information with respect to that interim determination. 67 FR 45028. The Department did not receive any comments concerning its interim determination.

A. Authority

Part C of Title III of the Energy Policy and Conservation Act (EPCA) contains energy conservation requirements for electric motors, including requirements for test procedures, energy efficiency standards, and compliance certification (42 U.S.C. 6311–6316). Section 345(c) of EPCA directs the Secretary of Energy to require motor manufacturers ''to certify, through an independent testing or certification program nationally recognized in the United States, that [each electric motor subject to EPCA efficiency standards] meets the applicable standard.'' 42 U.S.C. 6316(c). Regulations to implement this EPCA directive, with respect to certification programs, are codified in 10 CFR Part 431 at sections 431.123, *Compliance Certification,* 431.27, *Department of Energy recognition of nationally recognized certification programs,* and 431.28, *Procedures for recognition and withdrawal of recognition of accreditation bodies and certification programs.*

For a certification program to be classified by the Department as being nationally recognized, the program must: (1) Have satisfactory standards and procedures for conducting and administering a certification system, and for granting a certificate of conformity; (2) be independent; (3) be qualified to operate in a highly competent manner; and (4) be expert in the test procedures and methodologies in Institute of Electrical and Electronics Engineers (IEEE) Standard 112–1996 Test Method B and CSA Standard C390–93 Test Method (1), or similar procedures and methodologies for determining the energy efficiency of electric motors; and (5) have satisfactory criteria and procedures for selecting and sampling electric motors for energy efficiency testing. 10 CFR 431.27(b).

B. Background

Pursuant to 10 CFR 431.27, UL submitted a petition, ''Classification in Accordance with 10 CFR 431.27,'' (UL Petition or the Petition), which was published in the **Federal Register** on October 3, 2001. 66 FR 50355. The Petition consisted of a letter from UL to the Department, narrative statements on five subject areas, and supporting documentation. At the same time, DOE solicited comments, data, and information as to whether UL's Petition should be granted. The Department received two comments. The Department also conducted an independent investigation concerning the UL Petition pursuant to 10 CFR 431.28(f).

The supporting documents that accompanied the Petition, as well as the material UL subsequently submitted to the Department in support of UL's Petition, continue to be available in the Freedom of Information Reading Room, U.S. Department of Energy, Forrestal Building, Room 1E–190, 1000

Independence Avenue, SW., Washington, DC 20585–0101, Telephone (202) 586–3142, between the hours of 9 a.m. and 4 p.m., Monday through Friday, except Federal holidays. Additional information about the UL EVS Program and its Petition to be a nationally recognized certification program for electric motor efficiency can be obtained on the World Wide Web at *http://www.eren.doe.gov/buildings/codes_standards/rules/index.htm,* or from Ms. Jodine E. Smyth, Senior Coordinator, Global Accreditation Services, Underwriters Laboratories Inc., 333 Pfingsten Road, Northbrook, IL 60062, or Telephone: (847) 272–8800, ext. 42418; or Telefax (847) 509–6321, or electronic mail at *Jodine.E.Smyth@us.ul.com.*

The Department initially received comments on the UL Petition from Advanced Energy, dated October 12, 2001, and Emerson Motor Company, dated October 15, 2001. Advanced Energy is an independent motor testing facility and Emerson is a manufacturer of electric motors. In general, these commenters stated that UL was not qualified to test and certify electric motors for energy efficiency for the purposes of section 345(c) of EPCA.

After reviewing UL's Petition as well as other applicable documents, including the public comments and facts found through its investigation, the Department issued its interim determination, which was published in the **Federal Register** on July 5, 2002, and notified UL in writing of that interim determination pursuant to 10 CFR 431.28(d). See 67 FR 45028. After review of any comments and information submitted in response to the interim determination the Department is required to publish in the **Federal Register** an announcement of its final determination on the Petition. See 10 CFR 431.28(e). This notice sets forth DOE's final determination.

II. Discussion

A. General

For the Department to classify a certification program as ''nationally recognized,'' the program must meet the following criteria:

Sections 431.27(b)(1) and (c)(1) of 10 CFR Part 431 set forth criteria and guidelines for the standards and procedures for conducting and administering a certification system and for granting a certificate of conformity. As such, a certification program must have satisfactory standards and procedures for conducting and administering a certification system, including periodic follow up activities to assure that basic models of electric motors continue to conform to the efficiency levels for which they were certified and for granting a certificate of conformity. International Standards Organization/International Electrotechnical Commission (ISO/IEC) Guide 65 (discussed in 10 CFR 431.27(c)(3) and also below) sets forth the general requirements intended to ensure a certification program is operated in a consistent and reliable manner. These requirements address: (1) Impartiality; (2) sufficient personnel having the necessary education, training, technical knowledge and experience; (3) relevant procedures for sampling, testing and inspecting the product, and the means necessary to evaluate conformance by a manufacturer with those standards; (4) surveillance and periodic audits to ensure continued conformance with the applicable standards; (5) subcontracting work, such as testing, with proper arrangements to ensure competence, impartiality, and compliance with the applicable standards; (6) procedures to control records, documents and data, including review and approval by appropriately authorized personnel; and (7) control over use and display of certificates and marks of conformity.

Sections 431.27(b)(2) and (c)(2) of 10 CFR Part 431 set forth criteria and guidelines for independence. A certification program must be independent of electric motor manufacturers, importers, distributors, private labelers or vendors. It cannot be affiliated with, have financial ties with, be controlled by, or be under common control with any such entity. Further, it should disclose any relationship it believes might appear to create a conflict of interest. ISO/IEC Guide 65 sets forth requirements for a certification program to be impartial and requires that a program have a documented structure that safeguards impartiality. For example, each decision on certification is made by a person(s) different from those who carried out the evaluation or actual testing of the motor. A certification program's policies and procedures must distinguish between product certification and other activities, its certification process must be free from any commercial, financial and other pressures that might influence decisions, and it must have a committee structure where members are chosen to provide a balance of affected interests.

Sections 431.27(b)(3) and (c)(3) of 10 CFR Part 431 set forth criteria and guidelines requiring that a certification organization must be qualified to operate a certification system in a highly competent manner. Of particular relevance is documentary evidence that establishes experience in the application of guidelines contained in ISO/IEC Guide 65: 1996, *General requirements for bodies operating product certification systems,* ISO/IEC Guide 27: 1983, *Guidelines for corrective action to be taken by a certification body in the event of either misapplication of its mark of conformity to a product, or products which bear the mark of the certification body being found to subject persons or property to risk,* ISO/IEC Guide 28: 1982, *General rules for a model third-party certification system for products,* as well as experience in overseeing compliance with the guidelines contained in the ISO/IEC Guide 25: 1990, *General requirements for the competence of calibration and testing laboratories.*

Sections 431.27(b)(4) and (c)(4) of 10 CFR Part 431 set forth criteria and guidelines requiring that a certification program must be expert in the content and application of the test procedures and methodologies in IEEE Standard 112–1996 Test Method B and CSA Standard C390–93 Test Method (1). Of particular relevance would be documentary evidence that establishes experience in the application of guidelines contained in the ISO/IEC Guide 25.

ISO/IEC Guide 25 addresses general requirements for establishing quality systems in laboratories and for recognizing their competence to carry out specified tests. In part, these requirements address standards and procedures for ensuring that: (1) Organization and management that are free from commercial, financial, and other pressures which might adversely affect quality of work; (2) there is independence of judgment and integrity; (3) supervision is provided by persons familiar with the applicable test procedures; (4) a quality system, and a manual which contains procedures for control and maintenance of documents, and procedures for periodic audit and review are all in place; (5) there are sufficient personnel having the necessary education, training, technical knowledge and experience for their assigned functions, and training of its personnel is kept up-to-date; (6) all items of equipment and reference materials for the correct performance of tests are available and used, and the equipment is properly maintained and calibrated; (7) test equipment is calibrated and verified prior to operation, and there is traceability to national standards of measurement; (8) documented instructions for the use and operation of equipment, manuals, and applicable test procedures are in place;

(9) testing records with sufficient information to permit repetition of a test are retained; and (10) where a laboratory is subcontracted to conduct testing, that laboratory complies with the requirements contained in ISO/IEC Guide 25 and is competent to perform the applicable testing activities. An example of a ''sub-contracted'' laboratory would be a manufacturer's laboratory that tests motors for energy efficiency under the UL EVS Program.

Also, where 10 CFR 431.27(b)(4) requires a certification program to have satisfactory criteria and procedures for the sampling and selection of electric motors, likewise, ISO/IEC Guide 25 requires the use of documented sampling procedures and appropriate techniques to select samples.

B. Application of Evaluation Criteria

1. Standards and Procedures for Conducting and Administering a Certification System

Sections 431.27(b)(1) and (c)(1) of 10 CFR 431, and ISO/IEC Guide 65, set forth criteria and guidelines for the standards and procedures to be used in administering a certification system and granting a certificate of conformity.

In Attachment 1 to the UL Petition, entitled ''431.27(c)(1) Standards and Operating Procedures,'' it is stated that ''Underwriters Laboratories Inc. product safety certification program is an ISO Guide 65 compliant program'' and that ''UL's Energy Verification utilizes the same operation manuals as UL's product safety certification services with minor variations that are detailed in the UL Energy Verification Manual.''

Advanced Energy's comments, dated October 12, 2001, and Emerson Motor Company's comments, dated October 15, 2001, generally asserted that the UL EVS Program is not an ISO/IEC Guide 65 compliant program.

The Department's investigation found that the UL procedures for operating a certification system, provided as attachments to the Petition, were very general in nature and could be satisfactorily applied to any UL certification program. This raised the issue as to whether the specific standards and procedures by which the UL EVS Program operates are adequate, properly documented, well established and maintained according to the aforementioned ISO/IEC Guide 65 criteria. The Department's letter to UL, dated June 12, 2001, requested copies of the specific documents that have been approved by appropriately authorized UL personnel, and are used as the standard operating procedures for the UL EVS Program as it pertains to electric motors.

UL's letter to the Department, dated July 2, 2001, asserted that procedures which demonstrate compliance with sections 4.3, 4.8, 5 and 13 of ISO/IEC Guide 65 are contained in UL's *Conformity Assessment Manual,* the *Energy Verification Service Manual* (EVS Manual), and the *Client Interactive Programs Manual.* Copies were submitted to the Department during its investigative process. UL's letter, dated July 31, 2001, conveyed a copy of its *Motor Efficiency Guide,* 2001, which outlines the criteria UL uses to evaluate motor efficiency in the United States.

The UL *Conformity Assessment Manual* and *Client Interactive Programs Manual* establish general operating procedures that form a basis for UL certification programs, including the certification program for electric motors. The Department finds that ISO/IEC Guide 65 and the UL *Conformity Assessment* and *Client Interactive Programs Manuals* are consistent with each other in that they address, for example: (1) Steps necessary to evaluate conformance with relevant product standards, such as energy efficiency standards for electric motors; (2) competence of persons carrying out testing; (3) documented procedures for granting, maintaining and withdrawing certification; (4) control of documentation; and (5) surveillance to assure continued conformity with standards, such as energy efficiency standards for motors. The Department understands that these manuals are used in conjunction with the UL *EVS Manual* and *Motor Efficiency Guide.* The *Conformity Assessment Manual* and *Client Interactive Programs Manual* are further addressed in section II.3.c. of today's **Federal Register** Notice.

The EVS Manual outlines the standard criteria and operating procedures by which UL evaluates and verifies the energy efficiency of various types of products. In the case of electric motors, the EVS Manual refers to the energy efficiency test procedures found in 10 CFR 431.27. Its contents include efficiency verification procedures, documentation, sample selection, product testing, test facility evaluation, product construction evaluation, and manufacturers ongoing and follow-up testing. The *Motor Efficiency Guide* outlines the criteria that UL utilizes to evaluate motor efficiency in accordance with the energy efficiency regulations in the United States and Canada. It is used in combination with the EVS Manual for conducting evaluations in accordance with UL's EVS Program. It contains a tutorial on motor efficiency, information on correlation of stray load loss and the basis of acceptability for motor efficiency, sample selection, assessment of a testing facility, test record data sheets, and guides the UL representative that conducts a facility assessment and witness testing. For example, the section entitled ''Assessment of Client Facility,'' lists areas of a manufacturer's testing facility that UL would investigate under its certification program. These include investigation of a manufacturer's quality program system as to whether (1) an ISO 9001 or ISO 9002 quality assurance program is in place, (2) proficiency of personnel is witnessed, (3) the motor testing laboratory environment is properly maintained, (4) testing equipment is properly maintained and calibrated, and (5) testing of the energy efficiency of electric motors is conducted in accordance with 10 CFR 431.23.

Also, UL submitted the revised *Motor Efficiency Guide* ULS–02194–ZWAA, ''Test Record Data Sheet'' pages 1 through 14, and a page ULS–02194–ZWAA ''Appendix D,'' page 0001, ''Manufacturer's Test Equipment.'' The Department understands that this revised guide supersedes the above-referenced earlier version and is used in combination with the *Energy Verification Services Manual* for conducting evaluations in accordance with UL's EVS Program. Further, UL provided the Department a copy of UL's specific standard operating procedures which are utilized as part of the UL EVS Program. These included data sheets that describe the test methodology, follow-up inspections to verify electric motor efficiency, and an exemplary ''Certificate of Compliance.''

The Department has examined UL's Petition and all other documents described above, and affirms its conclusion that these documents provide evidence of satisfactory standards and procedures for UL to conduct its EVS Program to satisfy the requirements set forth in 10 CFR 431.27(b)(1) and (c)(1), and the guidelines contained in ISO/IEC Guide 65.

2. Independence

Sections 431.27(b)(2) and (c)(2) of 10 CFR part 431, and ISO/IEC Guide 65, set forth criteria and guidelines for impartiality.

In Attachment 2 to the UL Petition, entitled ''Independence,'' UL asserted that it is independent and impartial of any individual electric motor supplier or purchaser and is free from any other conflict of interest. A notarized Statement of Independence signed by an

officer of the corporation was submitted in support of its assertion.

The Department's June 12, 2001, letter to UL requested additional documents concerning the policies or procedures that distinguish (a) a direct or indirect relationship with a motor manufacturer, importer, or private labeler that is in a situation where UL both provides safety certification services and an EVS for such entity's motors, and (b) where a manufacturer's representative serves, for example, on UL Standards Technical Panel UL 1004, Electric Motors. Such relationships needed more explanation as to why each would not create or appear to create a conflict of interest, compromise UL's independence, or bias information presented to UL for the purposes of compliance with 10 CFR part 431.

UL's letter to the Department, dated July 2, 2001, asserted that UL is ''independent and impartial of any individual supplier or purchaser and is free from any other conflict of interest,'' and that ''UL has no stockholders, *i.e.*, no direct or indirect relationship with manufacturers, importers or private labelers.'' UL explained that it is incorporated as a not-for-profit organization in the State of Delaware, and its policy regarding conflict of interest is both addressed as a condition for employment and in its code of ethics. Also, chapter 2 of the UL ''*Client Interactive Programs Manual*'' sets forth procedures whereby each decision on certification is made by a person or persons different from those who carried out a motor efficiency evaluation. Furthermore, UL explained that its standards development process for safety matters is organizationally separated from its certification operations. Thus, a manufacturer's representative who participates in a UL Technical Panel as part of the standards development process only provides technical input to standards and has no influence over certification functions, such as the EVS Program for Electric Motors.

The Department has examined the above documents and affirms its conclusion that they provide sufficient evidence that the UL EVS Program meets the requirements for independence which are set forth in 10 CFR 431.27(b)(2) and(c)(2), and the guidelines for objectively and impartiality of technical persons and committees which are set forth in ISO/IEC Guide 65. Furthermore, the UL EVS Program meets the ISO/IEC Guide 25 requirements for organization and management to ensure confidence that its independence of judgment and integrity are maintained at all times.

3. Operation of a Certification System in a Highly Competent Manner

Sections 431.27(b)(3) and (c)(3) of 10 CFR 431 require that the petitioner demonstrate that its certification program operates in a highly competent manner by establishing its experience in the application of certain ISO/IEC Guides, including ISO/IEC Guides 65, 27 and 28, as well as experience in overseeing compliance with the guidelines in ISO/IEC Guide 25.

In Attachment 3 to the UL Petition, ''Testing Experience and Expertise,'' UL asserted that it has been conducting product safety evaluations for 105 years, and that in 1999 alone it conducted more than 94,300 product evaluations. As to further experience in operating a certification system and application of guidelines contained in ISO/IEC Guide 65, UL stated in Attachment 3, ''Summary of UL's Accreditations,'' that it is involved in more than 80 accreditation programs that are involved with the evaluation and testing of products for public safety. It stated that its competence as a product certification organization has been, for the most part, established under the criteria in ISO/IEC Guides 25 and 65. Copies of UL's accreditation documents from the American National Standards Institute (ANSI) and the Standards Council of Canada (SCC), and recognition as a Nationally Recognized Testing Laboratory from the Occupational Safety and Health Administration were attached to the UL Petition.

a. General Operating Requirements (ISO/IEC Guide 65)

Both Advanced Energy and Emerson Motor Company stated that ''UL has a solid reputation in testing services and quality assurance for safety programs,'' and is capable of administering safety programs because they are ISO/IEC Guide 65 compliant, as demonstrated by the ANSI accreditation. However, both Advanced Energy and Emerson Motor Company found ''no evidence of this being true with respect to UL's Energy Verification Program.'' Advanced Energy's letter, dated October 12, 2001, asserted that UL's EVS Program has the potential to confuse customers in the marketplace and unduly burden motor manufacturers, because UL would visit each motor manufacturer's facilities twice per year, require testing of an unspecified number of sample motors, and require inspection of the motor manufacturing processes. Advanced Energy and Emerson Motor Company stated that the UL EVS Program is not sufficient for the purposes of EPCA on motor efficiency, and that it conflicts with the intent of EPCA and 10 CFR Part 431.

In response to the above comments from Advanced Energy and Emerson Motor Company, UL's letter to the Department, dated October 22, 2001, asserted that Advanced Energy's view of the UL certification program is based upon limited exposure to UL's technical expertise and other portions of the EVS Program related to electric motors. Also, UL stated that it believes that Emerson Motor Company's concerns are addressed under 10 CFR Part 431 concerning the use of a certification program.

The Department examined the above UL accreditations and found that the majority of them concerned product safety certification and there was no explicit reference to the certification of energy efficiency for electric motors. The Department's June 12, 2001, letter to UL requested evidence as to whether the UL EVS Program for electric motors is, or will become, accredited by another organization, such as ANSI. Also, the Department's letter requested evidence of the technical qualifications and experience held by UL personnel directly involved with the UL EVS Program, such as technical evaluations and decisions concerning critical motor construction features, performance, and testing for energy efficiency using IEEE 112–1996 Test Method B and CSA C390–93 Test Method (1).

Thereafter, the Department received a letter, dated June 26, 2001, from ANSI which affirmed that the UL EVS Program is covered under the scope of the ANSI accreditation for Electrical and Electronic Products, Processes, Systems, and Services in accordance with ISO/IEC Guide 65. Also in response to the Department's June 12 letter, UL's letter, dated July 2, 2001, asserted that UL has documented procedures to ensure that qualified personnel review the evaluation of motors for compliance with energy efficiency requirements, and written instructions that set forth the duties and responsibilities of such personnel. UL staff undergoes continual on-the-job training and is evaluated through a documented performance appraisal process. UL has supervisory and review staff with the necessary education, training, skill, abilities and experience for evaluating motors for compliance with energy efficiency requirements, and its management structure provides for the supervision of reviewers and other personnel involved in the product certification process. UL's July 2nd letter conveyed resumes of certain staff involved in the EVS Program.

As to any undue burden on a manufacturer caused by UL's biannual inspections of a motor facility, the Department understands that UL's surveillance program consists of two random unannounced audits of the manufacturer's facilities, and such audits can be conducted separately or in conjunction with its motor safety investigations, thereby lessening the compliance burden on a manufacturer. Therefore, the Department believes that the UL EVS Program does not present any undue burden on a manufacturer.

As to the above-referenced comments from Advanced Energy and Emerson Motor Company concerning the UL EVS Program not meeting the requirements for a ''certification program'' in section 345(c) of EPCA and in 10 CFR 431.123(a)(1), the Department finds no facts or convincing arguments that support the assertions of Advanced Energy or Emerson Motor Company that the UL EVS Program is ''not sufficient'' or ''conflicts with the intent'' of EPCA, or ''would place additional burden on manufacturers.'' Such issues involving the merits and use of an accredited laboratory or a certification program were argued at length under sections II.C.2. and 3. of the Preamble to the Final Rule for Electric Motors, 64 FR 54124–26 (October 5, 1999) and need not be repeated here. The Department continues to believe that use of a certification program, such as the UL EVS Program, where it meets the requirements set forth in 10 CFR 431.27(a) will provide adequate assurance of compliance with EPCA's energy efficiency requirements. Because the assertions of Advanced Energy and Emerson Motor Company are merely arguments against the wisdom of the final rule and of the Departments regulations themselves, and are not directed at the UL Petition, they are rejected.

b. Guidelines for Corrective Action in the Event of Misapplication of a Mark of Conformity (ISO/IEC Guide 27)

ISO/IEC Guide 27 identifies procedures which a certification program should consider in response to a reported misuse of its registered mark of conformity. According to paragraph 1.1 (a) of ISO/IEC Guide 27, ''misuse'' may take a variety of forms, such as a mark of conformity appearing on a non-certified product. The Department construes this to mean the unauthorized use by a manufacturer or private labeler of the UL Verification Mark for Energy Efficiency (Mark or UL Mark) on an electric motor, such as the use of a counterfeit UL Mark. Under ISO/IEC Guide 27, the certification program would then be required to have strong corrective procedures in place. Such corrective measures would depend upon the nature of the misuse and the desire by the certification program to protect the integrity of its mark.

The Department has examined the UL *Conformity Assessment Manual* and finds that it contains procedures for reporting the misuse of any UL Mark used to identify certified products, such as any unauthorized or counterfeit use of a UL Registered mark. The Department affirms its conclusion that the UL *Conformity Assessment Manual* satisfactorily follows the guidelines for corrective action to be taken by a certification organization in the event of misapplication of a mark of conformity to an electric motor set forth in 10 CFR 431.27(c)(3) and ISO/IEC Guide 27.

c. General Rules for a Model Third-Party Certification System for Products (ISO/IEC Guide 28)

ISO/IEC Guide 28 addresses minimum guidelines for a third-party certification system in determining conformity with product standards through sample selection, initial testing and assessment of a factory quality management system, follow-up surveillance, subsequent testing of samples from the factory, and the use of a mark of conformity.

Consistent with the above ISO/IEC Guide 28 guidelines, Attachment 1 to the UL Petition, entitled ''431.27(c)(1) Standards and Operating Procedures,'' described the UL certification of motors under its EVS Program as being based upon: (1) Satisfactory evaluation and testing to the requirements of the applicable standard, which in this case is under 10 CFR 431.23; (2) continued surveillance at the manufacturing location; (3) initial motor evaluation that consists of an examination of motor efficiency test data, test facilities, and motor design and construction; (4) selection of samples and witness testing by a UL representative; (5) where an electric motor is found to be in compliance, authorization to apply a mark of conformity; and (6) procedures for withdrawal or cancellation of a mark of conformity if an electric motor is found in non-conformance. Also, UL submitted its *Energy Verification Service Manual* as evidence that its EVS Program for electric motors follows the guidelines contained in ISO/IEC Guide 28.

In view of ISO/IEC Guide 28, the Department examined the UL EVS Manual that outlines the criteria by which UL performs third-party energy efficiency certifications for various products, including electric motors. In sum, the UL EVS Manual contains the general operating procedures and business document formats applicable to UL's EVS Program, that when utilized in conjunction with the procedures and technical document formats in the UL *Conformity Assessment Manual* and *Motor Efficiency Guide,* correspond to the ''model'' procedures and example forms contained in ISO/IEC Guide 28. The Department finds that, in general, both ISO/IEC Guide 28, and the UL EVS and *Conformity Assessment Manuals* address: (1) The basic conditions and rules for a manufacturer to obtain and retain a certificate of conformity or mark of conformity; (2) initial inspection of a motor factory and a manufacturer's quality management system; (3) sample selection; (4) initial testing; (5) product evaluation; (6) surveillance; (7) identification of conformity in the form of a certificate of conformity or mark of conformity; (8) withdrawal of a certificate or mark of conformity by the certification program; and (9) guidelines on corrective action for misuse of a certificate or mark of conformity. The Department affirms its conclusion that the UL EVS Program satisfies the general guidelines for a model third-party certification system under 10 CFR 431.27(c)(3) and the guidelines set forth in ISO/IEC Guide 28.

Also, ISO/IEC Guide 28 requires a certification program operating at a national level, such as under section 345(c) of EPCA which requires manufacturers to certify compliance through a ''nationally recognized'' certification program, to have a suitable organizational structure and utilize personnel, equipment, and operating procedures that comply with the criteria for a testing laboratory in ISO/IEC Guide 25. Consistent with these guidelines, the UL *Conformity Assessment Manual* and *Client Interactive Programs Manual* provide general policies, practices and procedures that govern UL's conformity assessment services. These include submitting a product for investigation, conduct of the investigation, witnessed test data procedures, compliance management, issuance of the UL Mark, and follow-up services. The Department finds that the ''Client Test Data Program,'' contained in the *Client Interactive Programs Manual,* particularly addresses the UL EVS Program, whereby tests for energy efficiency are conducted at client facilities and are subject to review and audit by UL. Furthermore, the ''Client Test Data Program'' establishes policies and procedures consistent with ISO/IEC Guide 25 which address operating a laboratory quality system, testing equipment, qualification of personnel, test standards and procedures for

testing, training, assessment of a test facility, program administration, documentation, and issuing a certificate of qualification. The Department understands that both the *Conformity Assessment* and *Client Interactive Programs Manuals* are used in conjunction with UL's product-specific operations manuals, such as the UL *Energy Verification Service Manual,* that applies specific procedures to the acceptance of energy efficiency test data for electric motors.

The Department has examined the contents of these manuals and affirms its conclusion that they satisfy the guidelines for conducting a model third-party certification program at the national level as applicable under 10 CFR 431.27(c)(3) and ISO/IEC Guide 28.

d. General Requirements for the Competence of Testing Laboratories (ISO/IEC Guide 25)

Third-party certification programs must have experience overseeing compliance with the guidelines contained in ISO/IEC Guide 25. ISO/IEC Guide 25 sets out the general requirements by which a laboratory must operate if it is to be recognized as competent to carry out specific tests.

According to Attachment 3 to the UL Petition, ''Summary of UL's Accreditations,'' the majority of UL's accreditations cover UL as a testing laboratory and product safety certification organization. Although each accreditor to a certain extent establishes its own criteria, for the most part, two sets of criteria are utilized for evaluating the competence of a testing laboratory and product certification organization: ISO/IEC Guide 25, *General Requirements for the Competence of Calibration and Testing Laboratories* and ISO/IEC Guide 65 *General Requirements for Bodies Operating Product Certification Systems.* UL's written policies and associated operating procedures were designed using the criteria of these two guides.

UL's letter to the Department, dated January 24, 2002, asserted that UL has ''significant experience understanding, adapting, documenting and applying the requirements of Guide 25 to manufacturers' laboratories as evidenced by the [Client Test Data Program] CTDP documentation and overseeing compliance of manufacturers with UL's CTDP.'' According to the January 24 letter, UL has determined that Guide 25 as written ''can not solely be the basis on which it accepts responsibility for the test data generated from a manufacturer's laboratories,'' and as a result, UL's Client Test Data Program requirements are ''an adaptation of Guide 25, with necessary changes made, so that UL has an adequate basis for taking responsibility for the test data from a manufacturer's laboratory.'' For example, even though not required by ISO/IEC Guide 25, UL requires repeat testing and requires that the data from that repeat testing correlate with the original test data generated by the manufacturer. In addition, UL conducts audits of manufacturers' laboratories under the Client Test Data Program, whereas ISO/IEC Guide 25 only requires a laboratory to audit itself. UL believes such additional oversight requirements are necessary in order for it to accept responsibility for the test data. Further, UL asserted that it does not rely solely on a manufacturer's self-monitoring of laboratory competence through the laboratory's quality system; rather, UL itself ''directly monitors those aspects of laboratory operations that contribute to the accuracy of the test data produced.'' Thus, UL adds a second level of assurance through audit testing and subsequent data correlation. UL's January 24 letter concluded with the assertion that it has ''demonstrated experience overseeing a laboratory not just to Guide 25 requirements, but to even more stringent requirements related to transfer of responsibility for test data.''

The Department compared ISO/IEC Guide 25 with UL's CTDP as it would apply to a manufacturer's motor efficiency testing laboratory under a certification program and found them to be consistent with each other. Under UL's CTDP, a motor manufacturer's laboratory must, in sum, have a quality program that is subject to assessment and reassessment, have physical resources, equipment, qualified personnel and procedures that conform to national and international accreditation criteria, and have test data that is reviewed and subject to a regular audit. The Department found, for example:

- Where ISO/IEC Guide 25 sets forth requirements for organization and management of a testing laboratory to ensure proper supervision and integrity of data, similarly, the UL CTDP requires a testing laboratory to have procedures and policies in place to assure accuracy and correctness of the performance of the tests, test data developed, and results reported, as well as qualified staff to oversee testing and ensure proper documentation.
- Where ISO/IEC Guide 25 requires a manufacturer's testing laboratory to have a quality system with documented policies and procedures, such as for the organization and operation of a testing laboratory, traceability of measurements, calibration of equipment, test procedures used, procedures for corrective actions and audits, similarly, the UL CTDP requires a manufacturer's testing laboratory to have procedures and policies that assure accuracy and correctness of the performance of a test, test data developed, and results reported, and oversight of sampling, testing, data recording and periodic audits.
- Where ISO/IEC Guide 25 requires a manufacturer's testing laboratory to have sufficient personnel having the necessary education, training, technical knowledge and experience, the UL CTDP requires similar qualifications of testing laboratory personnel.
- Where ISO/IEC Guide 25 requires the proper environment and equipment for performance of testing, and that such equipment is properly maintained and calibrated, similarly the UL CTDP requires the proper environment for testing, and requires that equipment is fully operational, calibrated and traceable to nationally recognized standards of measurement.
- Where ISO/IEC Guide 25 requires the testing laboratory to maintain a record system of original observations, calculations, and derived data sufficient to permit repetition of a test, similarly, the UL CTDP requires data recording and test reports, and other documentation of initial assessments and reassessments and verification. Also, the UL CTDP requires that reference standards and test procedures used by the testing laboratory are current.
- Both ISO/IEC Guide 25 and the UL CTDP require test reports or test certificates that contain similar information.

In view of these comparisons, the Department affirms its belief, set forth in the interim determination, that UL's EVS Program satisfies the requirement of 10 CFR 431.27(c)(3) for documentary evidence that establishes experience in operating a certification system and overseeing compliance with the guidelines for competence contained in ISO/IEC Guide 25 to test electric motors for energy efficiency.

Also, 10 CFR 431.27 does not require a certification program to actually operate its own motor testing laboratory, nor is a laboratory operated or observed by a certification program required to be accredited. Nevertheless, the Department believes that the quality program to which a motor efficiency testing laboratory adheres under a certification program that is ''nationally recognized'' for the purposes of EPCA

should be inherently stringent because its efficiency measurements are the basis for compliance determinations for many motors. Therefore, the Department believes that a testing facility operated or observed by a certification program should follow the guidelines in ISO/IEC Guide 25. The Department understands that, in general, the evaluation of a motor testing laboratory under ISO/IEC Guide 25 includes an on-site assessment, proficiency testing, an audit of a laboratory's policies and operational procedures, review of staff qualifications, checks of proper maintenance and calibration of test equipment, and records review. Likewise, evaluation of a motor testing laboratory under the UL EVS includes evaluation of the manufacturer's testing facility, control and maintenance and calibration of test equipment, factory audits for continued compliance, document control, periodic audits of the operational and technical consistency of the program, control of non-conformances, staff training, and witness testing.

The Department believes that the goal of a third-party certification program is to provide assurance that test results are accurate, valid, and capable of being replicated. Tests must be performed with a degree of oversight so that the results are not influenced by marketing and production concerns. The Department affirms its belief that the UL EVS Program essentially follows the ISO/IEC 25 Guidelines.

4. Expertise in IEEE Standard 112–1996 Test Method B and CSA Standard C390–93 Test Method (1)

Section 431.27(b)(4) of 10 CFR Part 431 set forth evaluation criteria and guidelines whereby personnel conducting a certification program should be expert and experienced in the content and application of IEEE Standard 112–1996 Test Method B and CSA Standard C390–93 Test Method (1), or similar procedures and methodologies for determining the energy efficiency of electric motors. The program must have satisfactory criteria and procedures for the selection and sampling of electric motors tested for energy efficiency, and provide documents that establish experience in applying the guidelines for confidence in testing laboratories contained in ISO/IEC Guide 25. Such guidelines address quality audits and reviews, personnel, equipment, test methods, sampling, and records.

In Attachment 4 to the UL Petition entitled, ''431.27(c)(4) Expertise in Motor Test Procedures,'' it is stated that ''UL has been providing Energy Verification certification services since 1995,'' and that ''UL has evaluated motors in sizes ranging from 1 hp to 200 hp using the standards IEEE 112 Test Method B or CSA C390.'' According to the Petition, UL publishes a *Directory of Electric, Gas Fired, and Oil-Fired Equipment Verified for Energy Efficiency 1999,* which includes electric motors, and asserts that each member of its engineering staff has at least a four-year Bachelor of Science degree in engineering. Also, UL submitted to the Department a copy of its *Conformity Assessment Manual, EVS Manual, Client Interactive Programs Manual,* and *Motor Efficiency Guide* as evidence of its expertise in electric motor test procedures.

The Department's letter to UL, dated June 12, 2001, requested evidence as to the nature and extent of training that current staff actually involved with the EVS Program regularly undergoes to maintain proficiency with the evaluation of motor designs and construction, and the practice of energy efficiency testing.

UL's letter, dated July 2, 2001, asserted that UL has documented procedures to ensure that qualified personnel review the evaluation of motors for compliance with energy efficiency requirements. These include the written instructions for the duties and responsibilities of personnel with respect to the evaluation of motor efficiency investigations, as well as qualification requirements to assure that its personnel are qualified in the scientific disciplines related to energy efficiency. Further, UL asserted that its staff undergoes continual, on-the-job training and each person is evaluated through a documented performance appraisal process. UL has supervisors as review staff with the necessary education, training, skill, abilities and experience for evaluating motors for compliance with energy efficiency requirements. Also, UL has developed its own *Motor Efficiency Guide* as a reference for staff involved in conducting motor efficiency evaluations. UL's management structure provides for the supervision of reviewers and other personnel involved in the product certification process. UL's letter, dated September 20, 2001, contained the names of UL technical staff involved with the EVS Program, indicates their experience with CSA C390–93 and IEEE 112–1996, and contained a résumé for each.

Furthermore, UL's letter dated September 20, 2001, asserted that the test procedures in ''CSA C390–93 method B'' [sic] are similar to those procedures already in place under other CSA International Standards as well as UL Standards, and that the data and information recorded to verify energy efficiency is some of the same data and information required under the testing it conducts on a routine basis and which follows UL Standard 1004, ''Electric Motors,'' UL Standard 2111, ''Overheating Protection for Motors,'' UL 547, ''Thermally Protected Motors,'' and CSA C22.2 No. 77, ''Overheating Protection for Motors,'' and CSA C22.2 No. 100, ''Motors and Generators.'' UL asserted that the data and information recorded for energy verification testing is some of the same data and information required under the above-referenced test procedures, which it uses in an automated spreadsheet program entitled ''Motor Efficiency Testing Program V3.0,'' UL copyrighted 1994 and 1997, to calculate motor efficiency. The September 20 letter from UL compared the IEEE 112 and CSA C390 test procedures with similar procedures in the above ''UL'' and ''CSA'' standards for performance and safety.

Advanced Energy's letter, dated October 12, 2001, expressed concern with ''the level of 'expert' knowledge regarding motor testing.'' Advanced Energy asserted that UL is thorough in the documentation of procedures and calibrations of laboratory equipment, but weak in motor efficiency testing, test data analysis, and in its prescriptive audit process that does not involve motor testing, review of motor test data, or proficiency testing by a laboratory.

Emerson Motor Company's letter, dated October 15, 2001, expressed concern that UL uses a motor manufacturer's testing facilities that have been ''reviewed'' by a UL staff member, but there is no evidence of the staff member's credentials, knowledge, level of training and certification with regard to motor efficiency testing laboratories.

In response to the above comments from Advanced Energy and Emerson Motor Company, UL's letter, dated October 22, 2001, asserted that Advanced Energy's view of the UL certification program is based upon limited exposure to UL's technical expertise when both UL and Advanced Energy were exploring a business relationship in the 1990s. According to UL, a laboratory assessment is one part of its Client Test Data Program under which external testing, such as by Advanced Energy, would be accepted by UL. However, other portions of the UL's EVS Program, including staff with specific technical capability related to motor testing, were not completed at that time, nor had Advanced Energy

been exposed to the ''full expertise'' within the UL Program.

UL's letter to the Department, dated February 21, 2002, asserted that UL's experience in standards development, testing, and safety evaluation of motors according to the requirements of UL and other U.S. and International standards and the corresponding data acquisition necessary to accomplish these endeavors, is ''equivalent to and demonstrative of the indicated UL staff having the necessary proficiency and expertise to conduct energy efficiency evaluations.'' In sum, the experience with CSA C390–93 and IEEE Standard 112 of the five UL staff persons engaged in the UL EVS Program ranges from one to four years, which is in addition to their four to 13 years experience with test procedures for motor safety.

In the Department's view, any technically qualified person could satisfy the criteria for expertise in the content, application, and methodologies of the test procedures pursuant to 10 CFR 431.27(b)(4) if that person: (1) Is proficient in the test methodology of IEEE Standard 112 Test Method B and CSA C390–93 Test Method (1); (2) is familiar with the electrical, mechanical and environmental capabilities of a testing laboratory system, (3) understands how to prepare and mount a motor for testing, which includes the connection and operation of the test equipment, (4) is competent in calibrating test equipment; and (5) is competent with data collection and analysis. UL's experience in standards development, testing and evaluation of motors to both U.S. and international safety and similar energy efficiency procedures and methodologies provide sufficient evidence of UL staff having the necessary proficiency and expertise to conduct energy efficiency evaluations under ISO/IEC Guide 25. Thus, the Department affirms its belief that the qualifications of the UL Staff named in the above September 20 letter, regular additional training, and monitoring by UL management, satisfy the general requirements for the training, technical knowledge, and experience of testing laboratory personnel under 10 CFR 431.27(b)(4) and (c)(4).

5. Sampling Criteria and Procedures for Selecting an Electric Motor for Energy Efficiency Testing

Section 431.27(b)(4) of 10 CFR 431 requires a certification organization to have satisfactory criteria and procedures for the selection and sampling of electric motors tested for energy efficiency. Based on the National Institute of Standards and Technology report, NISTIR 6092, ''Analysis of Proposals for Compliance and Enforcement Testing Under the New Part 431: Title 10, Code of Federal Regulations,'' January 1998, which analyzed various criteria and sampling plans proposed for establishing compliance with the nominal full-load efficiency levels prescribed by EPCA, 42 U.S.C. 6313(b)(1), the Department determined that ''the NEMA proposal for compliance testing provides statistically meaningful sampling procedures.'' Moreover, the NIST analysis was extensive in order to determine whether a particular sampling plan would be valid for the purpose of establishing compliance with EPCA motor efficiency levels. Also, section 10.5 of ISO/IEC Guide 25: 1990 requires the use of documented procedures and appropriate statistical techniques to select samples.

In Attachment 1 of its Petition, UL described its sample selection process as one where representative samples from the manufacturer's production are selected for use in testing and witnessed by UL engineering staff. According to the Petition, representative samples are those that, when reviewed as a group, can adequately represent a line of similar models that use the same major energy consuming components. UL asserted that the objective in selecting representative samples is to obtain sufficient confidence that the series of motors verified meet the applicable energy efficiency standard while at the same time minimize the number of tests the manufacturer is required to perform. Samples are selected to represent an entire range of motors. Furthermore, as part of a manufacturer's ongoing production testing, UL audits the number of samples tested and the frequency of testing and test results which are documented by the manufacturer. The manufacturer is required to document the test results, which UL audits as part of each follow-up visit.

Notwithstanding UL's above assertions, the Department found no evidence that the samples used for a motor manufacturer's test data was selected randomly, that a UL representative participated in the sample selection process or witnessed any of the initial testing, or that it was clear that ''two samples'' were sufficient to statistically validate the energy efficiency of an entire line of electric motors.

Subsequently, UL submitted to the Department, under cover letter dated July 31, 2001, a copy of its *Motor Efficiency Guide* (Guide), to outline the criteria by which UL evaluates motor efficiency in accordance with energy efficiency regulations. The Department examined the Guide and found that appendix D contained a section entitled ''Sample Selection,'' Form Page 8 on ULS–02194–ZWAA–Appendix–0001, which set forth procedures whereby samples consisting of production units are ''randomly selected by UL Staff'' and appeared to satisfy one of the Department's concerns. However, in the ''Definitions'' section of the Guide, the Department found that the definition of ''nominal full load efficiency'' was not consistent with the definition of ''nominal full load efficiency'' in 10 CFR 431.2, nor did the Guide contain a definition of the term ''Sample.'' Also, the ''Basis of Acceptability,'' on Form Page 11 of appendix D in the Guide, which provided procedure to calculate a tolerance for ''permitted values of energy efficiency'' using a ''Coefficient K'' and required that the ''actual motor efficiency value will be not less than the associated minimum value,'' was inconsistent with 10 CFR 431.24, ''Determination of efficiency,'' and 10 CFR 431.42, ''Energy conservation standards.'' Thereafter, UL submitted to the Department, under cover letters dated January 11 and January 28, 2002, a copy of the revised pages in the Guide that were in question. These included a definition for the term ''sample,'' revised sample selection criteria, identification of UL's initial factory production visit to select the random samples, and corrections to the ''Statistical Test Method'' formulas and the ''Basis of Acceptability'' in order to be consistent with the applicable provisions in 10 CFR 431.

The Department affirms its conclusion that the above documents, as corrected by UL, are consistent with 10 CFR 431.24 and 431.42, and satisfy the criteria and procedures for the selection and sampling of electric motors to be tested for energy efficiency under 10 CFR 431.27(b)(4).

C. Other Matters

In a separate matter related to 10 CFR 431.82, ''Labeling requirements,'' and section 14, ''Use of licenses, certificates and marks of conformity,'' in the ISO/IEC Guide 65, Emerson Motor Company's comments, dated October 15, 2001, objected to any requirement to display a compliance certification labeling mark, such as the UL Mark, on an electric motor either in place of or in addition to the required Compliance Certification number supplied by the Department of Energy as provided for in 10 CFR 431.82(a)(1)(ii). Emerson Motor Company asserted that such additional marks would add significant financial burdens on motor manufacturers and

confuse the motor purchaser. Further, Emerson Motor Company asserted that the Department of Energy Compliance Certification number is the only mark allowed.

Advanced Energy's comments, dated October 12, 2001, objected to the proposed UL requirement that a manufacturer display the UL Mark. Advanced Energy asserted that there would be an added financial burden to a manufacturer because of being forced to display the UL Mark, with possible confusion to a motor purchaser attempting to distinguish between one motor with a Compliance Certification number alone and another motor with both a Compliance Certification number and the UL mark.

Section 431.82(a)(1) of 10 CFR 431 requires a manufacturer or private labeler to mark the permanent nameplate of an electric motor clearly with the motor's nominal full load efficiency and a Compliance Certification number supplied by the Department. However, 10 CFR 431.82(a)(3) permits the optional display of the encircled lowercase letters ''ee'' or some comparable designation or logo on either the permanent nameplate of an electric motor, a separate plate, or decalcomania. The UL Mark falls into the ''optional display'' category and would be comparable to the encircled lowercase letters ''ee.'' Therefore, display of the UL Mark would be permitted in addition to the labeling requirements set forth under section 431.82(a)(1). But, such optional display is not a replacement mark for the motor's nominal full load efficiency and the Compliance Certification number supplied by the Department. The optional logo or designation, (such as the UL Mark) may also be used in catalogs and other marketing materials according to 10 CFR 431.82(b)(2). The Department affirms its belief, set forth in the interim determination, that display of the UL Mark is a matter between UL and the manufacturer or private labeler.

III. Final Determination

On July 5, 2002, DOE published in the **Federal Register** an interim determination to classify Underwriters Laboratories Inc.'s Energy Verification Service Program for Electric Motors as a nationally recognized certification program for electric motor efficiency. At that time, the Department solicited comments, data and information with respect to that interim determination. 67 FR 45028. The Department did not receive any comments concerning its interim determination.

In view of the UL Petition and supporting documents, the public comments received, the Department's independent investigation, UL's corrections to its Program described above, and the fact no comments were submitted concerning the Department's interim determination, the Department concludes that the UL EVS Program for Electric Motors satisfactorily meets the criteria in 10 CFR 431.27.

Therefore, the Department's final determination is to classify the UL EVS Program for Electric Motors as nationally recognized in the United States for the purposes of section 345(c) of EPCA. This final determination is effective upon the publication of this notice in the **Federal Register**. Notwithstanding the Department's final determination, in the event that the UL EVS Program for Electric Motors fails to continue to meet the criteria in 10 CFR 431.27 for a nationally recognized certification program, the Department can withdraw recognition after following the procedural requirements in 10 CFR 431.28(g).

Issued in Washington, DC, on December 19, 2002.

David K. Garman,

Assistant Secretary, Energy Efficiency and Renewable Energy.

[FR Doc. 02–32534 Filed 12–26–02; 8:45 am]

BILLING CODE 6450–01–P

Federal Register

Friday,
December 27, 2002

Part IX

Office of Management and Budget

2002 North American Industry Classification System—Updates for 2007; Notice

OFFICE OF MANAGEMENT AND BUDGET

2002 North American Industry Classification System—Updates for 2007

AGENCY: Office of Management and Budget, Executive Office of the President.

ACTION: Notice of request for comments related to potential revisions to the North American Industry Classification System (NAICS) for 2007.

SUMMARY: Under Title 44, U.S.C. 3504(e), the Office of Management and Budget, through its Economic Classification Policy Committee (ECPC), is soliciting public comment on several questions related to a potential revision of the North American Industry Classification System (NAICS) for 2007. First, the ECPC is requesting feedback on the relative priority that should be assigned to each of the four underlying principles of NAICS. Second, the ECPC is seeking public comment on three potential goals for NAICS: increasing NAICS comparability within North America; accounting for new and emerging industries; and assessing the desirability of achieving greater future comparability with the industry classification systems used in Europe and the United Nations. The ECPC is soliciting public comment on each of these goals and how they should be ranked. Background information about NAICS' underlying principles and potential goals, as well as specific questions soliciting comments and suggestions, are provided in Parts I through IV below. Third, the ECPC is seeking proposals for new and emerging industries for consideration in potential revisions to NAICS for 2007. Finally in this notice the ECPC is notifying the public about procedures to announce updates to NAICS 2002 for any identified errors and omissions.

In Part I, the ECPC is soliciting public comment on the priority or weight that should be assigned to the four principles of NAICS: apply the production-oriented conceptual framework; recognize new and emerging industries; maintain time series continuity to the extent possible; and strive for international comparability. In Part II, the ECPC is soliciting public comment on the need to expand North American comparability during a 2007 revision of NAICS. Part III includes a solicitation for comment on the need to identify new and emerging industries. Part IV solicits public comment on the desirability of increasing international comparability and approaches that could be used. Part V solicits proposals that identify new and emerging industries. Part VI presents notification of a method to publicize corrections for errors and omissions that are identified in NAICS 2002.

In soliciting public comment about revising NAICS, the ECPC does not intend to open the entire classification for substantial change in 2007. The ECPC will consider public comments and proposals for changes or modifications that advance the goals of greater comparability within North America and that identify new and emerging industries. The ECPC is also seeking comments on the desirability of greater comparability with the industry classifications used in Europe and the United Nations as well as the preferred approach for obtaining greater international comparability. Although changes to NAICS solely for the purpose of enhancing international comparability are not expected to be a part of the NAICS 2007 revision, changes that improve NAICS in other ways and also enhance comparability will be considered. The comments received by the ECPC regarding the desirability of international comparability will be used to compile a set of recommendations for change to the international classification systems.

DATES: To ensure consideration of comments or proposals related to the potential revision of NAICS for 2007 detailed in this notice, comments must be submitted in writing. Comments on Parts I through IV should be submitted as soon as possible but no later than January 27, 2003. Comments on Part V should be submitted as soon as possible but no later than March 28, 2003. Please be aware of delays in mail processing at Federal facilities due to tightened security. Respondents are encouraged to send both a hard copy and a second copy via fax or e-mail.

ADDRESSES: Comments and proposals in response to this notice should be addressed to John Murphy, Chair, Economic Classification Policy Committee, Bureau of the Census, Room 2641–3, Washington, DC 20233–6500. It is suggested that written submissions be provided by e-mail to *John.Burns.Murphy@census.gov* or by fax at (301) 457–1343. Mr. Murphy can be reached at (301) 763–5172.

Electronic Availability: This document is available on the Internet from the Census Bureau Internet site at *http://www.census.gov/epcd/naics07/naics07fr.pdf.* The NAICS site <*http://www.census.gov/epcd/www/naics*> contains previous NAICS United States **Federal Register** notices, ECPC Issues Papers, ECPC Reports, the current structure of NAICS United States 2002, and related documents.

Public Review Procedure: All comments and proposals received in response to this notice will be available for public inspection at the Bureau of the Census, Suitland, Maryland. Please telephone the Census Bureau at (301) 763–5172 to make an appointment to enter the Federal Center. OMB will publish all ECPC recommendations for changes to NAICS for 2007 resulting from this notice in the **Federal Register** for review and comment prior to final action.

FOR FURTHER INFORMATION CONTACT: John Murphy, Chair, Economic Classification Policy Committee, Bureau of the Census, Room 2641–3, Washington, DC 20233–6500. Mr. Murphy can be reached at (301) 763–5172, by fax at (301) 457–1343, or by e-mail at *John.Burns.Murphy@census.gov.*

SUPPLEMENTARY INFORMATION: The supplementary information section of this notice is divided into six parts and an appendix. Part I provides background on NAICS 2002 and solicits comments on the prioritization of the four principles of NAICS; Part II solicits views regarding the advisability of increasing North American comparability; Part III solicits comments on the advisability of revising the classification for new and emerging industries; Part IV solicits input on the desirability of increased international comparability of industry statistics; Part V solicits proposals for new and emerging industries; and Part VI notifies the public of the location where the correction of errors or omissions for NAICS 2002 will be publicized.

Part I: Background of NAICS 2002

The North American Industry Classification System (NAICS) is a system for classifying establishments (individual business locations) by type of economic activity in Canada, Mexico, and the United States. Its purposes are: (1) to facilitate the collection, tabulation, presentation, and analysis of data relating to establishments, and (2) to promote uniformity and comparability in the presentation and analysis of statistical data describing the North American economy. NAICS is used by Federal statistical agencies that collect or publish data by industry. It is also widely used by State and local agencies, trade associations, private businesses, and other organizations.

Mexico's Instituto Nacional de Estadística, Geografía e Informática (INEGI), Statistics Canada, and the United States Office of Management and

Budget (OMB), through its Economic Classification Policy Committee (ECPC), collaborated on NAICS to make the industry statistics produced by the three countries comparable. NAICS is the first industry classification system developed in accordance with a single principle of aggregation, the principle that producing units that use similar production processes should be grouped together in the classification. NAICS also reflects in a much more explicit way the enormous changes in technology and in the growth and diversification of services that have marked recent decades. Industry statistics presented using NAICS are comparable, to a limited extent, with statistics compiled according to the latest revision of the United Nations' International Standard Industrial Classification (ISIC, Revision 3) for some sixty high-level groupings.

For the three countries, NAICS provides a consistent framework for the collection, tabulation, presentation, and analysis of industry statistics used by government policy analysts, by academics and researchers, by the business community, and by the public. However, because of different national economic and institutional structures as well as limited resources and time for constructing NAICS, its structure was not made entirely comparable at the individual industry level across all three countries. For some sectors and subsectors, the statistical agencies of the three countries agreed to harmonize NAICS based on sectoral boundaries rather than on a detailed industry structure. (The meaning of sectors and subsectors is provided below.) The portions of NAICS that are not comparable at the detailed industry level are delineated in Part II, below.

The four principles of NAICS are:

(1) NAICS is erected on a production-oriented conceptual framework. This means that producing units that use the same or similar production processes are grouped together in NAICS.

(2) NAICS gives special attention to developing production-oriented classifications for (a) new and emerging industries, (b) service industries in general, and (c) industries engaged in the production of advanced technologies.

(3) Time series continuity is maintained to the extent possible.

(4) The system strives for compatibility with the two-digit level of the International Standard Industrial Classification of All Economic Activities (ISIC Rev. 3) of the United Nations.

The ECPC is committed to maintaining the principles of NAICS as it develops further refinements. The current request for public comment on questions related to a potential revision of NAICS in 2007 results directly from the application of the four NAICS principles.

NAICS uses a hierarchical structure to classify establishments from the broadest level to the most detailed level using the following format:

Sector	2-digit	Sectors represent the highest level of aggregation. There are 20 sectors in NAICS representing broad levels of aggregation.
Subsector	3-digit	Subsectors represent the next, more detailed level of aggregation in NAICS. There are 100 sub-sectors in NAICS.
Industry Group	4-digit	Industry groups are more detailed than subsectors. There are 317 Industry groups in NAICS.
NAICS Industry	5-digit	NAICS industries are the level that, in most cases, represents the lowest level of three country comparability. There are 725 five-digit industries in NAICS.
National Industry	6-digit	National industries are the most detailed level of NAICS. These industries represent the national level detail necessary for economic statistics in an industry classification. There are 1179 U.S. industries in NAICS United States, 2002.

The implementation of the first vintage of NAICS—NAICS 1997—affected almost half of the industries that were available for use under the 1987 Standard Industrial Classification (SIC). The application of new concepts, new definitions, and the new structure was very disruptive to all users of the industry classification. By comparison, the changes for 2002 were limited in number and confined to three of the twenty NAICS sectors and 10 percent of the NAICS industries. In 2002, NAICS was revised to improve comparability in the Construction sector for the three countries and changes were made to identify Internet service providers (ISPs), web search portals, Internet auctions, and other activities not adequately addressed in NAICS 1997. Complete details on the 2002 revisions were published in an April 20, 2000, **Federal Register** notice (65 FR 21242–21282). The industry changes for 2002 did lead to additional disruption in Federal statistics because of varying implementation schedules for statistical agencies. Implementation of NAICS has extended from 1997 with complete implementation of the NAICS 2002 changes anticipated in 2006 or later. During this time period, various statistics will continue to be produced using the 1987 SIC, NAICS 1997, or NAICS 2002. The variation in implementation schedules is unavoidable because of program requirements but does cause problems for data users when their source data are based on different classifications or different versions of the classification. Additional time series disruptions have been limited because industry changes for 2002 did not significantly cross sector lines. A current implementation schedule for the agencies participating in the ECPC is available at: *http://www.census.gov/epcd/www/naicsfed.htm.*

NAICS represents a significant improvement over the previous classification systems used in North America. To ensure the relevance, accuracy, and timeliness of the classification, NAICS is reviewed every five years to determine what, if any, changes are required. The ECPC recognizes the costs involved when implementing industry classification revisions in statistical programs and the costs for data users when there are disruptions in the comparability of data. The ECPC also recognizes the economic, policy, and statistical implications that arise when the industry classification system does not identify and account for important economic developments. Balancing the costs of change against the potential for more relevant and accurate economic statistics requires significant input from data producers, data providers, and data users.

As the ECPC considers possible changes for NAICS 2007, it wants to ensure that changes to the industrial classification match the needs of data producers and users over time. The ECPC is soliciting comments on the priority and weight that should be assigned to each of the four principles of NAICS:

1. Apply the production-oriented conceptual framework;

2. Recognize new and emerging industries;

3. Maintain time series continuity to the extent possible; and

4. Strive for international comparability.

Part II. Increasing the North American Comparability of NAICS

The following NAICS sectors are currently comparable only at the sector (two-digit) level: utilities, wholesale trade; retail trade; and public administration. Other areas where comparability is somewhere between the sector level and the NAICS industry (five-digit) level are: finance and insurance; real estate; waste management and remediation services; as well as other services including personal and laundry services, and religious, grantmaking, civic, professional and similar organizations. Separate agreements providing for detailed industry comparability between Canada and the United States were reached for the Utilities, Retail Trade, and Finance and Insurance Sectors. To distinguish the three countries' versions of NAICS, they are called NAICS Canada, NAICS Mexico (SCIAN Mexico, in Spanish), and NAICS United States.

The ECPC recognizes the need for increasing the comparability of the NAICS structures being used in the three countries. The ECPC also recognizes the time sensitive nature of any revisions for 2007 and the costs of change. For this reason, the ECPC is soliciting public comment on the advisability of work to complete those areas of NAICS where comparability is currently at the two-digit (sector) level only. It should be noted that although there is only two-digit comparability for Public Administration, the governmental structures in each of the three countries are very different, and a need for comparable statistics within the Public Administration sector at the detailed industry level in all three countries has not been identified. Furthermore Wholesale Trade was revised during the NAICS 2002 review and is not a priority for the ECPC unless change is needed based on proposals for new and emerging industries. In addition, there is a separate agreement between Canada and the United States in the Retail Trade sector at the five-digit level. Although the Utilities sector is of considerable interest throughout North America, the current NAICS United States structure is appropriate for the current level of deregulation in the utility industries, and we have complete agreement with Canada at the five-digit (NAICS industry) level.

Because of resource constraints, the ECPC does not plan to increase North American comparability at this time. The ECPC is soliciting public comment on this position.

Part III. New and Emerging Industries

NAICS was developed to be a dynamic industry classification. Every five years, the classification is reviewed to determine the need to identify new and emerging industries. The ECPC has not, to date, identified specific changes that are needed. The ECPC is soliciting public comments on the advisability of revising NAICS for new and emerging industries in 2007 and soliciting proposals for these new industries.

When developing proposals for new and emerging industries, please note that there are two separate economic classification initiatives underway in the United States. NAICS, the industry classification, is the subject of this notice. The North American Product Classification System (NAPCS) will complement the NAICS industry system and provide an alternate way of classifying output. Comments on NAPCS are not being sought through this notice. NAICS was developed to classify units according to their production function. NAICS results in industries that group units undertaking similar activities using similar resources but does not necessarily group all similar products or outputs. NAPCS is being developed to classify the productive economic activities of units through their products or transactions, within a demand-based conceptual framework. For example, the hypothetical product of a flu shot can be provided by a doctor's office, a hospital, or a walk-in clinic. These three units are classified to three different NAICS industries; if data users want information about all flu shots provided, they must be able to identify the individual products coming out of the units. In many cases, the need for specific statistical data is better addressed with product data crossing industries rather than with the creation of a new industry. This is particularly true with NAICS, which groups establishments into industries based on their production function. Proposals for new industries in NAICS for 2007 will be evaluated within the context of both the industry and product classification systems to determine the most appropriate resolution. Certain proposals may be more adequately addressed through the identification and collection of product data. For a detailed description of the NAPCS initiative, see the April 16, 1999, **Federal Register** notice (64 FR 18984–18989) available at *http://www.census.gov/napcs.*

Part IV. Comparability With the Industry Classifications Used in Europe and the United Nations

As described in Part I of this notice, one of the principles of NAICS is comparability with the International Standard Industrial Classification (ISIC) of the United Nations. The Statistical Classification of Economic Activities in the European Community (NACE) is derived directly from ISIC. Over the past two years, an international working group with representatives from Eurostat, INEGI of Mexico, Statistics Canada, the United Nations, and the United States has studied ISIC, NACE, and NAICS. This group has identified the current classification systems' similarities and differences, beginning with underlying concepts and continuing to the detailed levels. The study is a multi-year initiative beginning with a detailed review of the systems and continuing in future years with recommendations for change to ISIC and potentially changes to NACE and/or NAICS that would lead to greater comparability of data resulting from the application of these systems. Each year, a review of the status and recommendations from this study is conducted with a decision to continue or stop made by the sponsoring agencies. The current phase of the study calls for public input on the advisability of modifying industrial classifications to foster greater international comparability.

Improved international comparability for NAICS can be attained using several different approaches:

- Concordance—The simplest approach for improving comparability is to create a concordance between ISIC and NAICS and a concordance between NACE and NAICS showing differences and similarities of the classification systems. While straightforward to construct, concordances become problematic because industries or combinations of industries in one classification do not link directly to an industry in the other classification. Rather it is common for parts of multiple industries in one system to link to one or more industries in the other system, making it very difficult to separate the ''parts'' from the industry total. As one aspect of the comparability study, the working group is developing these concordances. Upon their completion, the full concordances between ISIC and NAICS U.S. and NACE and NAICS U.S. will be available for review at: *http://www.census.gov/epcd/naics02/concordances.*
- Limited Changes in NAICS—A second approach is to aim for

comparability at sectoral levels such as manufacturing, retail trade, and services or at some level below the sector level. This approach will require changes to the underlying classification systems and would require changes to specific industries, sometimes creating new industries or moving part of one industry to another industry. The international working group has developed an illustrative hypothetical scenario that represents one way that the differences in classifications could be resolved. The scenario, summarized in Appendix I of this notice, creates a structure separate from NAICS that could form the basis for a recommendation for a new structure for ISIC. With this scenario, comparability could be obtained for 290 detailed groupings and 94 related aggregations of those detailed groupings by making adjustments to 45 NAICS U.S. national industries. The scenario structure would redefine the ISIC industries and bring them into agreement with the principles and concepts of NAICS. When combined with the 45 changes to NAICS U.S. summarized in Appendix I, the results would reduce or eliminate the many-to-many relationships associated with moving parts of industries. This scenario is presented as an illustration of how comparability could be improved while minimizing changes to NAICS. It does not represent the position of the United States or the statistical agencies represented on the ECPC. The scenario is exactly that, an illustration developed using the principles of NAICS as one possible way to resolve the differences presented in the concordances prepared by the working group if comparability beyond those concordances is determined to be desirable based on the comments received in response to this notice.

• New Common Classification System—Another approach would be to adopt a single classification system and associated numbering system that all countries and all statistical agencies would use. This approach is deemed to be infeasible because of its cost, significant differences in the underlying conceptual foundations of existing classification systems, and the time it would take to negotiate and implement.

The ECPC is soliciting public comment on several issues related to comparability of international statistical data:

1. The need for greater comparability of international data;

2. The preferred approach for improving comparability—concordance, limited changes in NAICS, or a new common classification system;

3. The advisability of making changes to NAICS in order to obtain greater comparability with NACE and ISIC and the relative amount of change that would be supported in order to align with a new international standard based on the principles of NAICS; and

4. The usefulness of the scenario discussed in Appendix I. Responses to this query will be used in formulating future recommendations for changes to ISIC.

Part V. Proposals To Identify New and Emerging Industries for NAICS 2007

The ECPC is soliciting proposals for changes to NAICS United States to account for new and emerging industries. Proposals will be collected, reviewed, and analyzed. As necessary, proposals for change will be negotiated with our partners in Canada and Mexico. When this process is complete, OMB will publish a **Federal Register** notice that presents the ECPC recommendations for additional public comment prior to a final determination of changes to NAICS for 2007.

Proposals for new industries will be evaluated using a variety of criteria. As previously mentioned, all proposals will be evaluated based on the application of the production function, their impact on comparability with North America and others, and their effect on time series. For any proposals that cross three-country levels of agreement, negotiations with Canada and Mexico, our partners in NAICS, will also affect the recommendations for those proposals. In addition, other criteria may influence recommendations for adoption. From a practical standpoint, industries must be of appropriate size. At the national level, this is generally not a major concern but there are a variety of statistical programs that produce industry data at the regional, State, MSA, or even county or local level. Proposed industries must include a sufficient number of establishments so that Federal agencies can publish industry data without disclosing information about the operations of individual firms. The ability of government agencies to classify, collect, and publish data on the proposed basis will be taken into account. Proposed changes must be such that they can be applied by agencies within their normal processing operations. Any recommendations for change forwarded by the ECPC for consideration will also take into account the cost of making the changes. These costs can be considerable and the availability of funding to make changes is a critical consideration.

Proposals for new or revised industries should be consistent with the production-oriented conceptual framework incorporated into the principles of NAICS. When formulating proposals, please note that an industry classification system groups the economic activities of producing units, which means that the activities of similar producing units cannot be separated in the industry classification system. Proposals for changes to NAICS industry classifications must be in writing and include the following information:

(a) Specific detail about the economic activities to be covered by the proposed industry, especially its production processes, specialized labor skills, and any unique materials used. This detail should demonstrate that the proposal groups establishments that have similar production processes that are unique and clearly separable from the production processes of other industries.

(b) Specific indication of the relationship of the proposed industry to existing NAICS United States six-digit industries.

(c) Documentation of the size and importance of the proposed industry in the United States.

(d) Information about the proposed industry in Canada and Mexico, if available.

The ECPC is soliciting proposals for specific new and emerging industries for consideration during a potential revision to NAICS for 2007 that conform to the NAICS principles and provide the supporting information listed above.

Part VI. Changes To Account for Errors and Omissions in NAICS 2002

No significant errors or omissions have been identified in NAICS 2002. Any errors or omissions that are identified in the future will be corrected and posted on the official NAICS Web site at *http://www.census.gov/naics.*

Appendix I. A Possible Scenario for Greater Comparability of Industrial Statistics

A working group with representation from Eurostat, INEGI, Statistics Canada, the United Nations Statistics Division, and the United States has generated an illustrative scenario of one way to bridge the differences between NAICS and ISIC, the international standard of the United Nations. This scenario provides differing levels of comparability based on the perceived need for comparable data for analytical purposes. The hypothetical scenario incorporates approximately 94 aggregate categories and 290 comparable

groupings at the most detailed level. The structure below is a summary of the scenario structure compared to NAICS.

NAICS	Scenario
11 Agriculture, Forestry, Fishing and Hunting	A. Agriculture, Forestry, Fishing, and Hunting.
21 Mining	B. Mining.
22 Utilities	C. Utilities.
23 Construction	D. Construction.
31–33 Manufacturing	E–F. Manufacturing.
42 Wholesale Trade	G. Wholesale and Retail Trade.
44–45 Retail Trade	
48–49 Transportation and Warehousing	H. Transportation and Storage.
51 Information	I. Information.
52 Finance and Insurance	K. Finance and Insurance.
53 Real Estate and Rental and Leasing	L. Real Estate and Rental and Leasing.
54 Professional, Scientific and Technical Services	M. Professional, Scientific and Technical Services, (including management of companies and enterprises).
55 Management of Companies and Enterprises.	
56 Administrative and Support and Waste Management and Remediation Services.	N. Administrative and Support Services.
	R. Sanitation.
61 Educational Services	O. Education.
62 Health Care and Social Assistance	P. Health and Social Services.
71 Arts, Entertainment, and Recreation	Q. Arts, Entertainment, and Recreation.
72 Accommodation and Food Services	J. Hotels and Restaurants.
81 Other Services (except Public Administration)	S. Repair and Maintenance
	T. Other Services.
92 Public Administration	U. Public Administration
	V. Extra-territorial Organizations and Bodies
	W. Private Households with Employed Persons.

The main concepts of NAICS, including the production function orientation, formed the basis for the hypothetical scenario. A number of these concepts, as reflected in the scenario, will represent considerable disruption for ISIC and NACE but do not affect NAICS. For example, the repair and maintenance of all manufactured goods (except personal and household goods) is currently included in manufacturing for ISIC and NACE but is already a separate sector in NAICS. The scenario includes a separate aggregation for repair and maintenance facilities that would potentially pull from all manufacturing industries in NACE and ISIC. In addition, the repair and maintenance of personal and household goods is currently included in the trade area of both ISIC and NACE. That would also have to be separately identified or moved to a new category under the scenario presented above. A similar situation exists for installation of machinery, generally in construction in the scenario but in manufacturing for ISIC and NACE.

Under the scenario, ISIC and NACE would adopt the NAICS treatment of the Information sector. This would cause disruption to their services and manufacturing sectors (as was the case when NAICS was implemented in the United States.) Additionally, ISIC and NACE do not currently distinguish between electrical and electronic goods. One of the hallmarks of NAICS was an aggregation for ''high tech'' manufacturing which includes computers, electronic components, technical instrumentation, and similar manufacturing. The scenario presented by the working group retains this concept.

The scenario also contains groupings for mining support services and educational support services. These groupings do not currently exist in ISIC or NACE. ISIC and NACE would also face considerable disruption in creating a grouping for scenic and sightseeing transportation that is currently dispersed by mode of transportation.

On the NAICS side, there are a smaller number of concepts that would have to be modified or adopted. The most significant would be the creation of a cargo handling grouping that is not dependent on the mode of transportation. Currently, NAICS separates cargo handling by the mode of transportation served. This change would acknowledge that large portions of cargo handling activities are actually multi-modal.

One potential result of this study is the adoption of a new ISIC structure based on the scenario and the concepts of NAICS. NACE is derived from ISIC and represents a more detailed breakdown of the ISIC structure. This summary of the hypothetical scenario and its impacts is based on the concept of the international standard (ISIC) changing and the impact on North America and Europe that would be necessary to provide data comparable to the new structure of ISIC.

Impacts of the Hypothetical Scenario on the Existing Classifications Used in the United States and Europe

There are 1179 industries in NAICS United States 2002. Of these detailed industries, the hypothetical scenario would require 45 to split (4 percent). Each affected NAICS sector is listed followed by the number of 6-digit industries in that sector. These splits are distributed as follows:

Sector 11, Agriculture, Forestry, Fishing and Hunting	4 (of 64) industry splits.
Sector 21, Mining	3 (of 29) industry splits.
Sector 22, Utilities	1 (of 10) industry split.
Sector 31–33, Manufacturing	25 (of 473) industry splits.
Sector 42, Wholesale Trade	1 (of 71) industry split.
Sector 48–49, Transportation and Warehousing	4 (of 57) industry splits.
Sector 54, Professional, Scientific, and Technical Services	2 (of 47) industry splits.

Sector 56, Administrative and Support and Waste Management and Remediation Services	1 (of 43) industry split.
Sector 81, Other Services (except Public Administration)	1 (of 49) industry split.
Sector 92, Public Administration	2 (of 29) industry splits.
Total U.S. industry splits	45 (of 1179) industry splits.

Resolution of these splits could involve the identification of new separate industries or moving part of one industry to another industry. The ECPC prefers the approach of identifying separate industries if at all possible within the constraints on industry definition that exist in NAICS. Industry classifications must cover the universe of economic activities. Splits in the list above may be technical splits that would have little or no impact on NAICS time series if moved. For example, the split of an industry for manufacturing electric trackless trolley buses is not anticipated to affect any NAICS industries because no evidence has been found that this activity actually takes place in the United States. Similarly, a split for the production of town gas would not affect NAICS United States because that activity, while occurring in other parts of the world, is no longer significant in the US, if it exists at all. These, as well as more significant splits, are included in the 45 splits listed above.

It is important to note that major concepts in NAICS and major accomplishments in the identification of service industries are largely untouched by this scenario. There are no changes in Sector 51, Information; there are two splits in Sector 54, Professional, Scientific, and Technical Services (one marginal, one that could create two new industries minimizing its impact). Of the 45 industries that would need to be split under this scenario, over half are ''other'' or ''all other'' industries. There are several cases where the industry splits are of sufficient size to consider creation of new industries for the parts rather than combining the parts with existing industries and disrupting additional industries. In the balance of the cases, there is either a strong production function justification for the move or the industry did not conform to the production function criteria used in NAICS. Changes were considered based on the production function during the initial development of NAICS but existing industries with no request for change were not completely recast, particularly in the manufacturing sector. In summary, the 45 split industry portions represent various levels of significance. Many of the significant changes could represent new industries, thereby minimizing implementation effects; smaller changes would need to be added to existing industries in NAICS, thereby increasing the number of detailed industries with content changes and potential time series breaks.

There are a number of sectors in NAICS United States that have no split industries under the hypothetical scenario. These include Sector 23, Construction; Sector 44–45, Retail Trade; Sector 51, Information; Sector 52, Finance and Insurance; Sector 53, Real Estate and Rental and Leasing; Sector 55, Management of Companies and Enterprises; Sector 61, Education; Sector 62, Health Care and Social Assistance; Sector 71, Arts, Entertainment, and Recreation; and Sector 72, Accommodation and Food Services.

If the detailed changes were implemented as described in the scenario by all parties, each would be able to maintain its own nomenclature and coding structure but aggregate to a common standard using predetermined industry relationships. Comparable building blocks would allow automated regrouping or aggregation of NAICS U.S. data to a common international standard. The key to this type of conversion is the comparability of the building blocks. The scenario developed by the working group is one possible way to align the content of the building blocks. This scenario represents a minor adjustment to industry details for NAICS United States.

If there were a desire to make only those changes necessary for comparability at the aggregated structure level shown in the summary above, approximately 10 industries would be split across existing NAICS sectors. These splits may or may not be of appropriate size to create separate industries. In cases where they are not of sufficient size or specialization, the split portion would need to move from one sector to another and be combined with an existing industry in the target sector. The remaining 35 split industries identified in the scenario would require resolution within an existing NAICS sector. Examples of cross sector changes included in the scenario are:

- Integrated growing of grapes and production of wine would move from manufacturing to agriculture;
- Long distance water pipelines with no treatment activity would move from utilities to transportation;
- Factory fish processing ships that also fish (rather than serve as collection points for a fleet of related fishing vessels) would move from manufacturing to fishing;
- Ship hold cleaning services would move from transportation to administrative and support services; and
- Automobile emission and safety inspection services would move from repair and maintenance to professional services.

The examples above are not exhaustive, but they are reflective of the type and significance of changes required under the scenario. A full list of the 45 industries that would require content splits under this scenario is available for review at: *http://www.census.gov/epcd/naics/internatworkgrp.*

There are 503 industries in NACE Rev 1. Of these detailed industries, the hypothetical scenario would require 246 to split (49 percent). These splits are distributed as follows:

Section A, Agriculture, hunting and forestry	7 (of 14) industry splits.
Section B, Fishing	2 (of 2) industry splits.
Section C, Mining and quarrying	14 (of 16) industry splits.
Section D, Manufacturing	143 (of 241) industry splits.
Section E, Electricity, gas and water supply	1 (of 4) industry split.
Section F, Construction	7 (of 17) industry splits.
Section G, Wholesale and retail trade; repair of motor vehicles, motorcycles and personal and household goods.	9 (of 77) industry splits.
Section H, Hotels and restaurants	1 (of 9) industry split.
Section I, Transport, storage and communication	11 (of 21) industry splits.
Section J, Financial intermediation	8 (of 12) industry splits.

Section K, Real estate, renting, and business activities	16 (0f 37) industry splits.
Section L, Public administration and defense; compulsory social security	7 (of 10) industry splits.
Section M, Education	1 (of 6) industry split.
Section N, Health and social work	4 (of 7) industry splits.
Section O, Other community, social and personal service activities	15 (of 28) industry splits.
Total European NACE splits	246 industry splits.

Only 10 of the 20 NAICS sectors include split industries while all sections of NACE (except private households and extraterritorial organizations and bodies) contain splits.

A detailed listing of this scenario is available for review at: *http://www.census.gov/epcd/naics/internatworkgrp.* It is important to note that this is one view of how comparability could be increased, but it does not represent the only option that could be considered during future revisions of NAICS in the United States. In addition to the detailed hypothetical scenario, the web page contains the detailed reports of the working group and other related documentation for review.

John D. Graham,

Administrator, Office of Information and Regulatory Affairs.

[FR Doc. 02–32663 Filed 12–26–02; 8:45 am]

BILLING CODE 3110–01–P

Federal Register

Friday,
December 27, 2002

Part X

Environmental Protection Agency

40 CFR Part 82

Protection of Stratospheric Ozone: Allocation of Essential Use Allowances for Calendar Year 2003; Final Rule

ENVIRONMENTAL PROTECTION AGENCY

40 CFR Part 82

[FRL–7430–7]

RIN 2060–AK48

Protection of Stratospheric Ozone: Allocation of Essential Use Allowances for Calendar Year 2003

AGENCY: Environmental Protection Agency (EPA).

ACTION: Final rule.

SUMMARY: With this action, EPA is allocating essential use allowances for import and production of class I stratospheric ozone depleting substances (ODSs) for calendar year 2003. Essential use allowances enable a person to obtain controlled class I ODSs as an exemption to the regulatory ban of production and import of these chemicals, which became effective on January 1, 1996. EPA allocates essential use allowances for exempted production or import of a specific quantity of class I ODS solely for the designated essential purpose. Today EPA is finalizing the allocations proposed in the **Federal Register** on November 6, 2002 (67 FR 67581). These allocations total 3,270 metric tons of chlorofluorocarbons for use in metered dose inhalers, and 13.2 metric tons of methyl chloroform for use in the U.S. Space Shuttle and Titan Rocket programs.

DATES: This final rulemaking is effective December 27, 2002.

ADDRESSES: Materials relevant to this rulemaking are contained in EPA Air Docket No. A–93–39. The Air Docket is located at EPA West Building, Room B102, 1301 Constitution Avenue, NW., Washington, DC, 20460. The Air Docket is open from 8:30 a.m. until 4:30 p.m. Monday through Friday. EPA may charge a reasonable fee for copying docket materials.

FOR FURTHER INFORMATION CONTACT: Scott Monroe, by regular mail: U.S. Environmental Protection Agency, Global Programs Division (6205J), 1200 Pennsylvania Avenue, NW., Washington, DC, 20460; by telephone: (202) 564–9712; or by email: *monroe.scott@epa.gov.*

SUPPLEMENTARY INFORMATION:

Table of Contents

I. Basis for Allocating Essential Use Allowances
A. What Are Essential Use Allowances?
B. Under What Authority Does EPA Allocate Essential Use Allowances?
C. What Is the Process for Allocating Essential Use Allowances?
II. Response to Comments
III. Allocation of Essential Use Allowances for Calendar Year 2003
IV. Administrative Requirements
A. Executive Order 12866: Regulatory Planning and Review
B. Paperwork Reduction Act
C. Regulatory Flexibility Act
D. Unfunded Mandates Reform Act
E. Executive Order 13132: Federalism
F. Executive Order 13175: Consultation and Coordination with Indian Tribal Governments
G. Executive Order 13045: Protection of Children from Environmental Health Risks and Safety Risks
H. Executive Order 13211: Actions that Significantly Affect Energy Supply, Distribution, or Use
I. National Technology Transfer and Advancement Act
J. Congressional Review Act
V. Judicial Review

I. Basis for Allocating Essential use Allowances

A. What Are Essential Use Allowances?

Essential use allowances are allowances to produce or import certain ozone-depleting chemicals in the U.S. for purposes that have been deemed ''essential'' by the Parties to the Montreal Protocol and the U.S. Government.

The Montreal Protocol on Substances that Deplete the Ozone Layer (Protocol) is the international agreement to reduce and eventually eliminate the production and consumption [1] of all stratospheric ozone depleting substances (ODSs). The elimination of production and consumption of class I ODSs is accomplished through adherence to phase-out schedules for specific class I ODSs,[2] including: chlorofluorocarbons (CFCs), halons, carbon tetrachloride, methyl chloroform, and methyl bromide. As of January 1, 1996, production and import of most class I ODSs were phased out in developed countries, including the United States.

However, the Protocol and the Clean Air Act (Act) provide exemptions that allow for the continued import and/or production of class I ODS for specific uses. Under the Protocol, exemptions may be granted for uses that are determined by the Parties to be ''essential.'' Decision IV/25, taken by the Parties to the Protocol in 1992, established criteria for determining whether a specific use should be approved as essential, and set forth the international process for making determinations of essentiality. The criteria for an essential use, as set forth in paragraph 1 of Decision IV/25, are the following:

''(a) that a use of a controlled substance should qualify as ''essential'' only if:

(i) it is necessary for the health, safety or is critical for the functioning of society (encompassing cultural and intellectual aspects); and

(ii) there are no available technically and economically feasible alternatives or substitutes that are acceptable from the standpoint of environment and health;

(b) that production and consumption, if any, of a controlled substance for essential uses should be permitted only if:

(i) all economically feasible steps have been taken to minimize the essential use and any associated emission of the controlled substance; and

(ii) the controlled substance is not available in sufficient quantity and quality from existing stocks of banked or recycled controlled substances, also bearing in mind the developing countries' need for controlled substances.''

B. Under What Authority Does EPA Allocate Essential Use Allowances?

Title VI of the Act implements the Protocol for the United States.[3] Section 604(d) of the Act authorizes EPA to allow the production of limited quantities of class I ODSs after the phase out date for the following essential uses:

(1) Methyl Chloroform, ''solely for use in essential applications (such as nondestructive testing for metal fatigue and corrosion of existing airplane engines and airplane parts susceptible to metal fatigue) for which no safe and effective substitute is available.'' EPA issues methyl chloroform allowances to the U.S. Space Shuttle and Titan Rocket programs.

(2) Medical Devices (as defined in section 601(8) of the Act), ''if such authorization is determined by the Commissioner [of the Food and Drug Administration], in consultation with the Administrator [of EPA] to be necessary for use in medical devices.'' EPA issues allowances to manufacturers of metered-dose inhalers, which use CFCs as propellant for the treatment of

[1] ''Consumption'' is defined as the amount of a substance produced in the United States, plus the amount imported into the United States, minus the amount exported to Parties to the Montreal Protocol (*see* section 601(6) of the Clean Air Act). Stockpiles of class I ODSs produced or imported prior to the 1996 phase out may be used for purposes not expressly banned at 40 CFR part 82.

[2] Class I ozone depleting substances are listed at 40 CFR part 82, subpart A, appendix A.

[3] According to section 614(b) of the Act, Title VI ''shall be construed, interpreted, and applied as a supplement to the terms and conditions of the Montreal Protocol * * * and shall not be construed, interpreted, or applied to abrogate the responsibilities or obligations of the United States to implement fully the provisions of the Montreal Protocol. In the case of conflict between any provision of this title and any provision of the Montreal Protocol, the more stringent provision shall govern.'' EPA's regulations implementing the essential use provisions of the Act and the Protocol are located in 40 CFR part 82.

asthma and chronic obstructive pulmonary diseases.

(3) Aviation Safety, for which limited quantities of halon-1211, halon-1301, and halon 2402 may be produced ''if the Administrator of the Federal Aviation Administration, in consultation with the Administrator [of EPA] determines that no safe and effective substitute has been developed and that such authorization is necessary for aviation safety purposes.'' Neither EPA nor the Parties have ever granted a request for essential use allowances for halon, because alternatives are available, or because existing quantities of this substance are large enough to provide for any needs for which alternatives have not yet been developed.

The Protocol, under Decision X/19, additionally allows a general exemption for laboratory and analytical uses through December 31, 2005. This exemption is reflected in EPA's regulations at 40 CFR part 82, subpart A. While the Act does not specifically provide for this exemption, EPA has determined that an allowance for essential laboratory and analytical uses is allowable under the Act as a *de minimis* exemption. The *de minimis* exemption is addressed in EPA's final rule of March 13, 2001 (66 FR 14760–14770). The Parties to the Protocol subsequently agreed (Decision XI/15) that the general exemption does not apply to the following uses: testing of oil and grease, and total petroleum hydrocarbons in water; testing of tar in road-paving materials; and forensic finger-printing. EPA incorporated this exclusion at appendix G to subpart A of 40 CFR part 82 on February 11, 2002 (67 FR 6352).

C. What Is the Process for Allocating Essential Use Allowances?

Before EPA may allocate essential use allowances, the Parties to the Protocol must first approve the United States' request to produce or import essential class I ODSs. The procedure set out by Decision IV/25 calls for individual Parties to nominate essential uses and the total amount of ODSs needed for those essential uses on an annual basis. The Protocol's Technology and Economic Assessment Panel evaluates the nominated essential uses and makes recommendations to the Protocol Parties. The Parties make the final decisions on whether to approve a Party's essential use nomination at their annual meeting. This nomination cycle occurs approximately two years before the year in which the allowances would be in effect. The allowances allocated through today's action were first nominated by the United States in January 2001.

Once the U.S. nomination is approved by the Parties, EPA allocates essential use exemptions to specific entities through notice-and-comment rulemaking in a manner consistent with the Act. For medical devices, EPA requests information from manufacturers about the number and type of devices they plan to produce, as well as the amount of CFCs necessary for production. EPA then forwards the information to the Food and Drug Administration (FDA), which determines the amount of CFCs necessary for metered-dose inhalers in the coming calendar year. Based on FDA's assessment, EPA proposes allocations to each eligible entity. Under the Act and the Protocol, EPA may allocate essential use allowances in quantities that together are below or equal to the total amount approved by the Parties. EPA may not allocate essential use allowances in amounts higher than the total approved by the Parties.

For methyl chloroform, Decision X/6 by the Parties to the Protocol established that ''* * * the remaining quantity of methyl chloroform authorized for the United States at previous meetings of the Parties [will] be made available for use in manufacturing solid rocket motors until such time as the 1999–2001 quantity of 176.4 tons (17.6 ODP-weighted tons) allowance is depleted, or until such time as safe alternatives are implemented for remaining essential uses.'' Section 604(d)(1) of the Act terminates the exemption period for methyl chloroform on January 1, 2005. Therefore, between 1999 and 2004 EPA may allow production or import up to a total of 176.4 metric tons of methyl chloroform for authorized essential uses. According to EPA's tracking system, the total amount of methyl chloroform produced or imported by essential use allowance holders in the years 1999–2001 was 28.3 metric tons. With today's allocation totaling 13.2 tons, the U.S. remains well below the established cap on allowances for methyl choloroform.

II. Response to Comments

EPA received one comment in response to the proposed rule. The commenter supported the proposed allocations.

III. Allocation of Essential Use Allowances for Calendar Year 2003

With today's action, EPA is allocating essential use allowances for calendar year 2003 to entities listed in Table 1. These allowances are for the production or import of the specified quantity of class I controlled substances solely for the specified essential use.

TABLE I.—ESSENTIAL USE ALLOCATION FOR CALENDAR YEAR 2003

Company	Chemical	Quantity (metric tons)
(i) Metered Dose Inhalers (for oral inhalation) for Treatment of Asthma and Chronic Obstructive Pulmonary Disease		
Armstrong Pharmaceuticals	CFC–11 or CFC–12 or CFC–114	574
Aventis	CFC–11 or CFC–12 or CFC–114	48
Boehringer Ingelheim Pharmaceuticals	CFC–11 or CFC–12 or CFC–114	907
Glaxo SmithKline	CFC–11 or CFC–12 or CFC–114	535
Schering-Plough Corporation	CFC–11 or CFC–12 or CFC–114	937
Sidmak Laboratories [4]	CFC–11 or CFC–12 or CFC–114	136
3M Pharmaceuticals	CFC–11 or CFC–12 or CFC–114	133
(ii) Cleaning, Bonding and Surface Activation Applications for the Space Shuttle Rockets and Titan Rockets		
National Aeronautics and Space Administration (NASA)/Thiokol Rocket.	Methyl Chloroform	9.8

TABLE I.—ESSENTIAL USE ALLOCATION FOR CALENDAR YEAR 2003—Continued

Company	Chemical	Quantity (metric tons)
United States Air Force/Titan Rocket	Methyl Chloroform	3.4

[4] EPA proposed to allocate allowances to Sidmak Laboratories, Inc. for 136 metric tons for use in 2003. Following publication of the proposal, Sidmak was purchased by the pharmaceutical firm PLIVA d.d. In 2003, a subsidiary of PLIVA d.d. reportedly will replace Sidmak Laboratories, thereby acquiring Sidmak's essential use allowances. A letter to EPA describing the purchase and PLIVA's commitment to execute essential use allowances in accordance with EPA regulations and Sidmak's application for allowances has been filed in Air Docket A–93–39, Category XII–A.

IV. Administrative Requirements

A. Executive Order 12866: Regulatory Planning and Review

Under Executive Order 12866 (58 FR 51735, October 4, 1993), the Agency must determine whether this regulatory action is ''significant'' and therefore subject to review by the Office of Management and Budget (OMB) and the requirements of the Executive Order. The Order defines ''significant regulatory action'' as one that is likely to result in a rule that may:

(1) Have an annual effect on the economy of $100 million or more, or adversely affect in a material way the economy, a sector of the economy, productivity, competition, jobs, the environment, public health or safety, or State, local, or tribal governments or communities;

(2) Create a serious inconsistency or otherwise interfere with an action taken or planned by another agency;

(3) Materially alter the budgetary impact of entitlements, grants, user fees, or loan programs or the rights and obligations of recipients thereof; or

(4) Raise novel legal or policy issues arising out of legal mandates, the President's priorities, or the principles set forth in the Executive Order.

It has been determined that this action is not a ''significant regulatory action'' under the terms of Executive Order 12866 and is therefore not subject to OMB review.

B. Paperwork Reduction Act

This action does not add any information collection requirements or increase burden under the provisions of the Paperwork Reduction Act, 44 U.S.C. 3501 *et seq.* OMB previously approved the information collection requirements contained in the final rule promulgated on May 10, 1995, and assigned OMB control number 2060–0170 (EPA ICR No. 1432.21).

Burden means the total time, effort, or financial resources expended by persons to generate, maintain, retain, or disclose or provide information to or for a Federal agency. This includes the time needed to review instruction; develop, acquire, install, and utilize technology and systems for the purposes of collecting, validating, and verifying information, processing and maintaining information, and disclosing and providing information; adjust the existing ways to comply with any previously applicable instructions and requirements; train personnel to be able to respond to a collection of information; search data sources; complete and review the collection of information; and transmit or otherwise disclose the information. An Agency may not conduct or sponsor, and a person is not required to respond to a collection of information unless it displays a currently valid OMB control number. The OMB control numbers for EPA's regulations are listed in 40 CFR part 9 and 48 CFR chapter 1.

C. Regulatory Flexibility Act

EPA has determined that it is not necessary to prepare a regulatory flexibility analysis in connection with this final rule. EPA has also determined that this rule will not have a significant economic impact on a substantial number of small entities. For purposes of assessing the impact of today's rule on small entities, small entities are defined as: (1) Pharmaceutical preparations manufacturing businesses (NAICS code 325412) that have less than 750 employees; (2) a small governmental jurisdiction that is a government of a city, county, town, school district or special district with a population of less than 50,000; and (3) a small organization that is any not-for-profit enterprise that is independently owned and operated and is not dominant in its field.

After considering the economic impacts of today's final rule on small entities, EPA has concluded that this action will not have a significant economic impact on a substantial number of small entities. In determining whether a rule has a significant economic impact on a substantial number of small entities, the impact of concern is any significant adverse economic impact on small entities, since the primary purpose of the regulatory flexibility analyses is to identify and address regulatory alternatives ''which minimize any significant economic impact of the proposed rule on small entities.'' 5 U.S.C. 603 and 604. Thus, an agency may conclude that a rule will not have a significant economic impact on a substantial number of small entities if the rule relieves regulatory burden, or otherwise has a positive economic effect on all of the small entities subject to the rule. This rule provides an otherwise unavailable benefit to those companies that are receiving essential use allowances. We have therefore concluded that today's final rule will relieve regulatory burden for all small entities.

D. Unfunded Mandates Reform Act

Title II of the Unfunded Mandates Reform Act of 1995 (UMRA), Pub. L. 104–4, establishes requirements for Federal agencies to assess the effects of their regulatory actions on State, local, and tribal governments and the private sector. Under section 202 of the UMRA, EPA generally must prepare a written statement, including a cost-benefit analysis, for proposed and final rules with ''Federal mandates'' that may result in expenditures to State, local, and tribal governments, in the aggregate, or to the private sector, of $100 million or more in any one year.

Before promulgating an EPA rule for which a written statement is needed, section 205 of the UMRA generally requires EPA to identify and consider a reasonable number of regulatory alternatives and adopt the least costly, most cost-effective, or least burdensome alternative that achieves the objectives of the rule. The provisions of section 205 do not apply when they are inconsistent with applicable law. Moreover, section 205 allows EPA to adopt an alternative other than the least costly, most cost-effective, or least burdensome alternative, if the Administrator publishes with the final rule an explanation why that alternative was not adopted.

Before EPA establishes any regulatory requirements that may significantly or uniquely affect small governments, including tribal governments, it must have developed a small government agency plan under section 203 of the

UMRA. The plan must provide for notifying potentially affected small governments, enabling officials of affected small governments to have meaningful and timely input in the development of EPA regulatory proposals with significant Federal intergovernmental mandates, and informing, educating, and advising small governments on compliance with the regulatory requirements.

Today's rule contains no Federal mandates (under the regulatory provisions of Title II of the UMRA) for State, local, or tribal governments or the private sector, since it merely provides exemptions from the 1996 phase out of class I ODSs. Similarly, EPA has determined that this rule contains no regulatory requirements that might significantly or uniquely affect small governments, because this rule merely allocates essential use exemptions to entities as an exemption to the ban on production and import of class I ODSs.

E. Executive Order 13132: Federalism

Executive Order 13132, entitled ''Federalism'' (64 FR 43255, August 10, 1999), requires EPA to develop an accountable process to ensure ''meaningful and timely input by State and local officials in the development of regulatory policies that have federalism implications.'' ''Policies that have federalism implications'' is defined in the Executive Order to include regulations that have ''substantial direct effects on the States, on the relationship between the national government and the States, or on the distribution of power and responsibilities among the various levels of government.''

This final rule does not have federalism implications. It will not have substantial direct effects on the States, on the relationship between the national government and the States, or on the distribution of power and responsibilities among the various levels of government, as specified in Executive Order 13132. Thus, Executive Order 13132 does not apply to this rule.

F. Executive Order 13175: Consultation and Coordination With Indian Tribal Governments

Executive Order 13175, entitled ''Consultation and Coordination with Indian Tribal Governments'' (65 FR 67249, November 9, 2000), requires EPA to develop an accountable process to ensure ''meaningful and timely input by tribal officials in the development of regulatory policies that have tribal implications.'' This final rule does not have tribal implications, as specified in Executive Order 13175. Today's rule affects only the companies that requested essential use allowances. Thus, Executive Order 13175 does not apply to this rule.

G. Executive Order 13045: Protection of Children From Environmental Health Risks and Safety Risks

Executive Order 13045, ''Protection of Children from Environmental Health risks and Safety Risks'' (62 FR 19885, April 23, 1997), applies to any rule that (1) is determined to be ''economically significant'' as defined under Executive Order 12866, and (2) concerns an environmental health and safety risk that EPA has reason to believe may have a disproportionate effect on children. If the regulatory action meets both criteria, the Agency must evaluate the environmental health or safety effects of the planned rule on children, and explain why the planned regulation is preferable to other potentially effective and reasonably feasible alternatives considered by the Agency. EPA interprets Executive Order 13045 as applying only to those regulatory actions that are based on health or safety risks, such that the analysis required under section 5–501 of the Order has the potential to influence the regulation. This rule is not subject to Executive Order 13045 because it implements the phase-out schedule and exemptions established by Congress in Title VI of the Clean Air Act.

H. Executive Order 13211: Actions That Significantly Affect Energy Supply, Distribution, or Use

This rule is not subject to Executive Order 13211, Actions Concerning Regulations That Significantly Affect Energy Supply, Distribution, or Use (66 FR 28355, May 22, 2001) because it is not a significant regulatory action under Executive Order 12866.

I. National Technology Transfer and Advancement Act

Section 12(d) of the National Technology Transfer and Advancement Act of 1995 (''NTTAA), Pub. L. 104–113, section 12(d) (15 U.S.C. 272 note) directs EPA to use voluntary consensus standards in this regulatory activities unless to do so would be inconsistent with applicable law or otherwise impractical. Voluntary consensus standards are technical standards (*e.g.*, materials specifications, test methods, sampling procedures, and business practices) that are developed or adopted by voluntary consensus standards bodies. The NTTAA directs EPA to provide Congress, through OMB, explanations when the Agency decides not to use available and applicable voluntary consensus standards. This final rule does not involve technical standards. Therefore, EPA did not consider the use of any voluntary consensus standards.

J. Congressional Review Act

The Congressional Review Act, 5 U.S.C. 801 *et seq.*, as added by the Small Business Regulatory Enforcement Fairness Act of 1996, generally provides that before a rule may take effect, the agency promulgating the rule must submit a rule report, which includes a copy of the rule, to each House of the Congress and to the Comptroller General of the United States. Therefore, EPA will submit a report containing this rule and other required information to the U.S. Senate, the U.S. House of Representatives, and the Comptroller General of the United States prior to publication of the rule in the **Federal Register**. This rule is not a ''major rule'' as defined by 5 U.S.C. 804(2). This rule will be effective December 27, 2002.

V. Judicial Review

Under section 307(b)(1) of the Act, EPA finds that these regulations are of national applicability. Accordingly, judicial review of the action is available only by the filing of a petition for review in the United States Court of Appeals for the District of Columbia Circuit within sixty days of publication of the action in the **Federal Register**. Under section 307(b)(2), the requirements of this rule may not be challenged later in judicial proceedings brought to enforce those requirements.

List of Subjects in 40 CFR Part 82

Environmental protection, Administrative practice and procedure, Air pollution control, Chemicals, Chlorofluorocarbons, Exports, Imports, Laboratory and Analytical Uses, Methyl Chloroform, Ozone layer, Reporting and recordkeeping requirements.

Dated: December 19, 2002.

Christine Todd Whitman,

Administrator.

40 CFR Part 82 is amended as follows:

PART 82—PROTECTION OF STRATOSPHERIC OZONE

1. The authority citation for part 82 continues to read as follows:

Authority: 42 U.S.C. 7414, 7601, 7671–7671q.

Subpart A—Production and Consumption Controls

2. Section 82.4 is amended by revising the table in paragraph (t)(2) to read as follows:

§ 82.4 Prohibitions.

* * * * *

(t) * * *

(2) * * *

TABLE I.—ESSENTIAL USE ALLOCATION FOR CALENDAR YEAR 2003

Company	Chemical	Quantity (metric tons)
(i) Metered Dose Inhalers (for oral inhalation) for Treatment of Asthma and Chronic Obstructive Pulmonary Disease		
Armstrong Pharmaceuticals	CFC–11 or CFC–12 or CFC–114	574
Aventis	CFC–11 or CFC–12 or CFC–114	48
Boehringer Ingelheim Pharmaceuticals	CFC–11 or CFC–12 or CFC–114	907
GlaxoSmithKline	CFC–11 or CFC–12 or CFC–114	535
Schering-Plough Corporation	CFC–11 or CFC–12 or CFC–114	937
Sidmak Laboratories	CFC–11 or CFC–12 or CFC–114	136
3M Pharmaceuticals	CFC–11 or CFC–12 or CFC–114	133
(ii) Cleaning, Bonding and Surface Activation Applications for the Space Shuttle Rockets and Titan Rockets		
National Aeronautics and Space Administration (NASA)/Thiokol Rocket.	Methyl Chloroform	9.8
United States Air Force/Titan Rocket	Methyl Chloroform	3.4

* * * * *

[FR Doc. 02–32719 Filed 12–26–02; 8:45 am]

BILLING CODE 6560–50–P

Reader Aids

Federal Register

Vol. 67, No. 249

Friday, December 27, 2002

CUSTOMER SERVICE AND INFORMATION

Federal Register/Code of Federal Regulations	
General Information, indexes and other finding aids	**202–741–6000**
Laws	**741–6000**
Presidential Documents	
Executive orders and proclamations	**741–6000**
The United States Government Manual	**741–6000**
Other Services	
Electronic and on-line services (voice)	**741–6020**
Privacy Act Compilation	**741–6064**
Public Laws Update Service (numbers, dates, etc.)	**741–6043**
TTY for the deaf-and-hard-of-hearing	**741–6086**

ELECTRONIC RESEARCH

World Wide Web

Full text of the daily Federal Register, CFR and other publications is located at: **http://www.access.gpo.gov/nara**

Federal Register information and research tools, including Public Inspection List, indexes, and links to GPO Access are located at: **http://www.archives.gov/federal__register/**

E-mail

FEDREGTOC-L (Federal Register Table of Contents LISTSERV) is an open e-mail service that provides subscribers with a digital form of the Federal Register Table of Contents. The digital form of the Federal Register Table of Contents includes HTML and PDF links to the full text of each document.

To join or leave, go to **http://listserv.access.gpo.gov** and select *Online mailing list archives, FEDREGTOC-L, Join or leave the list (or change settings);* then follow the instructions.

PENS (Public Law Electronic Notification Service) is an e-mail service that notifies subscribers of recently enacted laws.

To subscribe, go to **http://hydra.gsa.gov/archives/publaws-l.html** and select *Join or leave the list* (or change settings); then follow the instructions.

FEDREGTOC-L and **PENS** are mailing lists only. We cannot respond to specific inquiries.

Reference questions. Send questions and comments about the Federal Register system to: **info@fedreg.nara.gov**

The Federal Register staff cannot interpret specific documents or regulations.

FEDERAL REGISTER PAGES AND DATE, DECEMBER

71443–71796 2
71797–72088 3
72089–72362 4
72363–72550 5
72551–72826 6
72827–75798 9
75799–76102 10
76103–76292 11
76293–76670 12
76671–76980 13
76981–77146 16
77147–77398 17
77399–77644 18
77645–77906 19
77907–78120 20
78121–78320 23
78321–78664 24
78665–78958 26
78959–79512 27

CFR PARTS AFFECTED DURING DECEMBER

At the end of each month, the Office of the Federal Register publishes separately a List of CFR Sections Affected (LSA), which lists parts and sections affected by documents published since the revision date of each title.

3 CFR

Proclamations:
7631 72089
7632 72551
7633 76103
7634 76669
7635 77905

Administrative Orders:
Memorandums:
Memorandum of November 27, 2002 71795
Memorandum of November 6, 2002 75799

Executive Orders:
11246 (Amended by EO 13279).....77143
13278 76671
13279 77141
13280 77145
13281 78319

Presidential Determinations:
No. 99–13 (See Presidential Determination No. 2003–06 78123
No. 2003–04 72363
No. 2003–05 78121
No. 2003–06 78123
No. 2003–07 77645
No. 2003–08 78125

5 CFR

532 78959
1800 78321

7 CFR

27 77147
56 78665
70 78665
301 78127
331 76908
718 71797
905 71798
989 71803
1806 78321
1822 78321
1924 78321
1925 78321
1927 78321
1930 78321
1940 78321
1942 77907
1944 78321
1948 78321
1950 78321
1951 78321
1955 78321
1965 78321
1980 .....78128, 78321
2200 76105
3550 78321
4279 78128

Proposed Rules:
46 77002
246 71774
319 77940
916 77003
917 77003
959 78751

8 CFR

103 .....71443, 76256, 78667
212 .....71443, 78675
214 .....71443, 76256
235 71443
245 78667
248 76256
264 71443
274a 76256
286 71443
299 71443

9 CFR

93 .....72827, 78332
94 77148
98 78332
121 76908

Proposed Rules:
71 77004
82 77004
94 77004

10 CFR

Ch. 1 72091
1 77651
19 77651
20 77651
21 77651
32 77651
34 77651
39 77651
50 78332
51 .....77651, 78130
55 77651
61 78130
70 78130
72 .....78130, 78332
73 .....77651, 78130
74 78130
75 78130
76 78130
81 77651
150 78130
431 72274

Proposed Rules:
50 71490

11 CFR

100 .....76962, 78679
101 78679
102 78679
104 78679
106 78679
110 .....76962, 78679, 78959

111 76962
113 ....76962, 78679
114 78679
116 78679
300 78679
9002 78679
9003 78679
9004 78679
9034 78679
9035 78679

Proposed Rules:

100 78753
110 78753

12 CFR

223 76560
250 76560
303 79246
502 78150
505 78150
506 ....76293, 77909, 78150
516 78150
541 78150
545 78150
550 76293
551 76293
557 78150
559 ....77909, 78150
560 76304
561 78150
562 ....75809, 77909
563 ....77909, 78150
563e 78150
563g 78150
575 78150
590 76304
591 76304
906 78959

Proposed Rules:

223 76618
226 72618
303 79271
333 79271
347 79271
348 79271
359 79271
701 72444
703 78996
742 78996
791 72113

13 CFR

Proposed Rules:

120 72622

14 CFR

21 72830
23 77399
25 ....76652, 78961
39 ....71450, 71452, 71455, 71808, 71810, 71812, 71816, 72091, 72553, 75809, 75812, 76106, 76109, 76111, 76673, 76981, 76982, 77401, 77404, 77405, 77653, 77666, 78153, 78156, 78963, 78965, 78968
71 ....71457, 71458, 71459, 71460, 71815, 72365, 72441, 76306, 78352
91 72830
95 ....78352, 78970
97 ....71816, 72553, 76675, 76677
119 72726
121 ....72726, 72830, 78970
125 ....72830, 78970
129 ....72726, 72830
135 ....72726, 78970
145 78970
183 72726
1260 77667
1274 77667

Proposed Rules:

1 77326
23 71490
39 ....71493, 71495, 71497, 71500, 71503, 71505, 71904, 72115, 72119, 75819, 75822, 75824, 76120, 76702, 76704, 77442, 77444, 78393, 78394, 79007, 79008
71 ....71507, 71508, 71509, 71906, 75826, 76320, 77326, 78397
91 ....76624, 77326
95 77326
97 77326
119 76624
121 ....71908, 76624, 77326, 78196
125 ....76624, 77326
129 77326
135 ....76624, 77326
255 72869
399 ....72396, 72869
1260 72121

15

50 72095
303 77407

17 CFR

4 77409
240 79454
275 77620
279 77620
420 77411

Proposed Rules:

4 77446
205 71670
210 76780
228 77594
229 77594
230 79466
232 79466
239 79466
240 ....71909, 76780, 77594, 79466
249 ....76780, 79466
250 79466
259 79466
260 79466
269 79466
270 71915
274 ....76780, 77594, 79466

18 CFR

284 72098

Proposed Rules:

35 ....76122, 76321, 77007
284 72870

19 CFR

Proposed Rules:

101 71510
122 ....71510, 71512
123 71512

20 CFR

1 78874
30 78874
260 77152
320 77152

Proposed Rules:

206 77447
217 77448
404 78196
416 78196
429 77942
604 72122

21 CFR

5 71461
16 71461
101 71461
314 77668
320 77668
336 72555
338 72555
341 ....72555, 78158
500 78172
510 ....72365, 78354, 78684
520 ....71819, 72365, 78354, 78356, 78684, 78971
522 ....72366, 72367, 78354, 78357, 78971, 78972
524 ....78354, 78684
556 ....72367, 78356, 78972
558 ....71820, 71821, 72368, 72369, 72370
868 76678
878 77675

Proposed Rules:

870 76706
878 77698
1020 ....76056, 78760

22 CFR

40 77158
41 55159
42 77160
45 76681
62 76307
126 78685
200 78686
507 76112

Proposed Rules:

41 76711

23 CFR

627 75902
635 75902
636 75902
637 75902
710 75902

24 CFR

941 76096

25 CFR

21 77677
256 77919

Proposed Rules:

Ch. 1 75828

26 CFR

1 ....71821, 72274, 76985, 77678, 78174, 78358, 78367, 78371, 78687
301 ....77416, 77418, 77419, 77678, 78371
602 ....77678, 78174, 78371, 78687

Proposed Rules:

1 ....75899, 76123, 77450, 77701, 78202, 78398, 78761

27 CFR

9 ....72834, 77922

Proposed Rules:

4 79011
5 79011
7 79011
13 79011

28 CFR

97 78699
540 ....77161, 77425
541 77427

29 CFR

500 76985
1611 72373
1904 77165
4011 71470
4022 ....71470, 76682
4044 ....71472, 76682

Proposed Rules:

403 79280
408 79280
1915 76214

30 CFR

48 ....76658, 78713
75 ....76658, 78044, 78713
915 72375
924 71826
948 71832

31 CFR

103 78383
285 78936
352 78384
585 78973
586 78973

Proposed Rules:

10 77724

33 CFR

100 ....71840, 76986
117 ....71473, 71474, 71840, 72099, 72100, 72559, 72560, 76116, 76116, 76988, 76989, 78975, 78977
165 ....71475, 71840, 72561, 72840, 76989, 76991, 77428, 77924, 78385
175 72100
177 72100
179 72100
181 72100
183 72100

Proposed Rules:

52 76142
117 ....71513, 72126, 77949, 79012
165 ....71513, 75831, 77008, 79014, 79017
334 78912

34 CFR

200 71710
700 78979
701 78979
702 78979

36 CFR

1200 ....72101, 77133

Proposed Rules:

111 77726
215 77451
219 ....72770, 72816

37 CFR

201 78176
253 77170
259 71477
Proposed Rules:
201 77951

38 CFR

3 78979
21 72563
Proposed Rules:
Ch. 1 79020
1 77737
3 76322

39 CFR

111 78178
255 75814
501 71843
Proposed Rules:
111 72626

40 CFR

52 ....72379, 72573, 72574, 72576, 72579, 72842, 72844, 76316, 76993, 77430, 77926, 78179, 78181, 78980, 78983, 78987
61 72579
62 76116
63 ....72330, 72580, 77687
81 76450
82 ....77927, 79508
86 72821
70 71479
125 78948
131 71843
141 73011–74047
142 73011–74047
180 ....71847, 72104, 72585, 72846, 78713, 78715
261 78718
270 77687
271 76995
300 76683
721 72854
1065 72724
Proposed Rules:
9 79020
50 79460
52 ....71515, 72874, 76326, 77010, 77196, 77204, 77212, 77463, 77955, 79028
62 76150
63 ....72276, 72875, 77562, 77828, 77830, 78046, 78274, 78614
81 ....77196, 77204, 77212
86 72818
122 79020
123 79020
124 79020
125 78956
130 79020
141 ....71520, 78203
261 78761
264 78614
265 78614
271 77010
300 72888
451 71523
764 71524
1610 72890

41 CFR

101-5 78731
101-6 76882
101-18 76882
101-19 76882
101-20 76882
101-33 76882
101-47 76882
102-37 78732
102-71 76820
102-72 76820
102-73 76820
102-74 76820
102-75 76820
102-76 76820
102-78 76820
102-79 76820
102-80 76820
102-81 76820
102-83 76820

42 CFR

Proposed Rules:
54 77350
54a 77350
73 ....71528, 76886
405 76684
1001 ....72892, 72894
1003 ....72896, 76886

43 CFR

Proposed Rules:
4 77011
4100 77011
5000 77011

44 CFR

64 72593
65 71482
Proposed Rules:
208 77628

45 CFR

4 78989
50 77692
Proposed Rules:
31 72128
96 77350
260 77362
1050 77368

46 CFR

2 72100
10 72100
15 72100
24 72100
25 72100
26 72100
30 72100
70 72100
90 72100
114 72100
169 72100
175 72100
188 72100
199 72100
Proposed Rules:
540 79029

47 CFR

1 77173
11 77174
22 77175
24 77175
32 77432
64 71861
73 ....71891, 71892, 71893, 71894, 76318, 76998, 78191, 78192, 78193, 78386, 78387
76 78387
90 76697
Proposed Rules:
0 77220
1 76628
2 75968
22 78209
24 78209
25 ....75968, 78399
27 78209
43 77220
63 77220
64 ....77220, 78763
73 ....71924, 71925, 71926, 77220, 77374, 78215, 78400, 78401, 78402
76 77374
87 75968

48 CFR

208 77936
219 77936
225 77937
252 77937
Proposed Rules:
Ch. 10 76150
213 77955

49 CFR

1 72383
199 78388
241 75938
571 ....77193, 79416
573 72384
577 72384
Proposed Rules:
10 78403
23 76327
171 72034
172 72034
173 72034
175 72034
176 72034
178 72034
180 72034
219 75966
533 77015

50 CFR

17 ....76030, 78570
222 71895
223 ....71895, 78388
229 ....71900, 75817
300 ....72110, 72394
622 ....71901, 71902, 72112, 77193
635 ....71487, 77433, 77434, 78990
648 ....71488, 72867, 76318, 76701, 78994
679 ....71489, 72595, 76998, 77439, 78733, 78739
Proposed Rules:
17 ....71529, 72396, 72407, 75834, 76156, 77464, 77466, 78763
600 ....76329, 77957
635 ....72629, 78404
648 72131
679 ....76344, 76362

REMINDERS

The items in this list were editorially compiled as an aid to Federal Register users. Inclusion or exclusion from this list has no legal significance.

RULES GOING INTO EFFECT DECEMBER 27, 2002

COMMERCE DEPARTMENT

National Oceanic and Atmospheric Administration

Fishery conservation and management:

Alaska; fisheries of Exclusive Economic Zone—

Gulf of Alaska groundfish; published 11-27-02

ENVIRONMENTAL PROTECTION AGENCY

Air pollutants, hazardous; national emission standards:

Secondary aluminum production; published 12-27-02

Air programs:

Stratospheric ozone protection—

Essential use allowances allocation 2003 CY; published 12-27-02

Air quality implementation plans; approval and promulgation; various States; air quality planning purposes; designation of areas:

Idaho; published 10-28-02

Air quality implementation plans; approval and promulgation; various States:

New Hampshire; published 10-28-02

FEDERAL DEPOSIT INSURANCE CORPORATION

Practice and procedure:

Filing procedures, unsafe and unsound banking practices, transfer agents registration, international banking, management official interlocks, etc.; published 12-27-02

FEDERAL ELECTION COMMISSION

Contribution and expenditure limitations and prohibitions:

Contribution limits increase, prohibition on contributions and donations by minors, and expenditures by foreign nationals

Transmittal to Congress; effective date delay and correction; published 12-27-02

HEALTH AND HUMAN SERVICES DEPARTMENT

Food and Drug Administration

Animal drugs, feeds, and related products:

Danofloxacin; published 12-27-02

Neomycin sulfate soluble powder; published 12-27-02

Trenbolone acetate and estradiol benzoate; published 12-27-02

SECURITIES AND EXCHANGE COMMISSION

Securities:

Trade-through disclosure rules for options; repeal; published 12-27-02

TREASURY DEPARTMENT

Foreign Assets Control Office

Sanctions regulations, etc.:

Yugoslavia (Serbia and Montenegro) and Bosnian Serb-controlled areas of the Republic of Bosnia and Herzegovina; unblocking of assets; published 12-27-02

VETERANS AFFAIRS DEPARTMENT

Adjudication; pensions, compensation, dependency, etc.:

Persian Gulf War veterans; undiagnosed illnesses compensation; presumptive period extension; published 12-27-02

COMMENTS DUE NEXT WEEK

AGRICULTURE DEPARTMENT

Agricultural Marketing Service

Meats, prepared meats, and meat products; certification and standards:

Federal meat grading and certification services; fee changes; comments due by 12-31-02; published 11-1-02 [FR 02-27766]

AGRICULTURE DEPARTMENT

Commodity Credit Corporation

Loan and purchase programs:

Farm and Ranch Lands Protection Program; comments due by 12-30-02; published 10-29-02 [FR 02-26888]

COMMERCE DEPARTMENT

National Oceanic and Atmospheric Administration

Fishery conservation and management:

Northeastern United States fisheries—

Summer flounder, scup, and black sea bass; comments due by 12-30-02; published 10-30-02 [FR 02-27566]

DEFENSE DEPARTMENT

Federal Acquisition Regulation (FAR):

Debarment and suspension; order placement and option exercise; comments due by 1-3-03; published 11-4-02 [FR 02-27268]

ENERGY DEPARTMENT

Federal Energy Regulatory Commission

Electric utilities (Federal Power Act), natural gas companies (Natural Gas Act), and oil pipeline companies (Interstate Commerce Act):

Asset retirement obligations; accounting, financial reporting, and rate filing requirements; comments due by 1-3-03; published 11-19-02 [FR 02-28294]

ENVIRONMENTAL PROTECTION AGENCY

Air quality implementation plans; approval and promulgation; various States:

Ohio; comments due by 1-2-03; published 12-2-02 [FR 02-30468]

Solid wastes:

Waste management system; testing and monitoring activities; methods innovation; comments due by 12-30-02; published 10-30-02 [FR 02-26441]

Water supply:

National primary and secondary drinking water regulations—

Chemical and microbiological contaminants; analytical methods approval; Colitag method; comments due by 1-2-03; published 12-2-02 [FR 02-30467]

FEDERAL COMMUNICATIONS COMMISSION

Radio stations; table of assignments:

Michigan; comments due by 12-30-02; published 12-3-02 [FR 02-30508]

North Carolina; comments due by 12-30-02; published 12-3-02 [FR 02-30510]

Texas; comments due by 12-30-02; published 12-3-02 [FR 02-30506]

Television stations; table of assignments:

Maine; comments due by 1-3-03; published 11-21-02 [FR 02-29577]

GENERAL SERVICES ADMINISTRATION

Federal Acquisition Regulation (FAR):

Debarment and suspension; order placement and option exercise; comments due by 1-3-03; published 11-4-02 [FR 02-27268]

HEALTH AND HUMAN SERVICES DEPARTMENT

Centers for Medicare & Medicaid Services

Medicare:

Hospital outpatient prospective payment system (2003 CY); comments due by 12-31-02; published 11-1-02 [FR 02-27548]

INTERIOR DEPARTMENT

Fish and Wildlife Service

Endangered and threatened species:

Critical habitat designations—

Blackburn's sphinx moth; comments due by 12-30-02; published 8-26-02 [FR 02-21702]

Blackburn's sphinx moth; comments due by 12-30-02; published 10-10-02 [FR 02-25722]

Findings on petitions, etc.—

Western gray squirrel; comments due by 12-30-02; published 10-29-02 [FR 02-27297]

Fishery conservation and management:

Critical habitat designations—

Blackburn's sphinx moth; comments due by 12-30-02; published 11-15-02 [FR 02-29049]

LABOR DEPARTMENT

Mine Safety and Health Administration

Independent laboratories and non-MSHA product safety standards; testing and evaluation; alternate requirements; comments due by 12-31-02; published 10-17-02 [FR 02-25879]

LABOR DEPARTMENT

Occupational Safety and Health Administration

Safety and health standards, etc.:

Standards improvement project (Phase II); comments due by 12-30-02; published 10-31-02 [FR 02-27541]

LEGAL SERVICES CORPORATION

Freedom of Information Act; implementation; comments due by 1-2-03; published 11-18-02 [FR 02-29123]

NATIONAL AERONAUTICS AND SPACE ADMINISTRATION

Federal Acquisition Regulation (FAR):

Debarment and suspension; order placement and option exercise; comments due by 1-3-03; published 11-4-02 [FR 02-27268]

SECURITIES AND EXCHANGE COMMISSION

Securities:

Broker-dealer exemption from sending financial information to customers; comments due by 1-2-03; published 12-3-02 [FR 02-30664]

TRANSPORTATION DEPARTMENT

Coast Guard

Merchant marine officers and seamen:

Passenger ships on international voyages; personnel training and qualifications; comments due by 12-30-02; published 10-30-02 [FR 02-27376]

TRANSPORTATION DEPARTMENT

Federal Aviation Administration

Airworthiness directives:

Airbus; comments due by 1-3-03; published 12-4-02 [FR 02-30654]

Boeing; comments due by 12-30-02; published 10-31-02 [FR 02-27315]

Bombardier; comments due by 1-2-03; published 12-2-02 [FR 02-30347]

Cessna; comments due by 12-30-02; published 10-21-02 [FR 02-26662]

Eurocopter France; comments due by 1-3-03; published 11-4-02 [FR 02-27789]

Hartzell Propeller, Inc.; comments due by 1-3-03; published 11-4-02 [FR 02-27739]

Honeywell; comments due by 12-31-02; published 11-1-02 [FR 02-27433]

McDonnell Douglas; comments due by 1-2-03; published 11-18-02 [FR 02-29118]

Raytheon; comments due by 1-2-03; published 10-25-02 [FR 02-27196]

SOCATA-Groupe Aerospatiale; comments due by 1-3-03; published 11-15-02 [FR 02-29004]

Airworthiness standards:

Special conditions—

Air Tractor Inc.; comments due by 1-2-03; published 12-2-02 [FR 02-30325]

Sikorsky Aircraft Corp. Model S-92A helicopters; comments due by 12-30-02; published 10-29-02 [FR 02-27378]

Class D airspace; comments due by 1-2-03; published 12-2-02 [FR 02-30328]

TRANSPORTATION DEPARTMENT

Federal Highway Administration

Engineering and traffic operations:

Traffic control devices on Federal-aid and other streets and highways; standards; comments due by 12-30-02; published 10-30-02 [FR 02-27608]

TRANSPORTATION DEPARTMENT

National Highway Traffic Safety Administration

Motor vehicle safety standards:

Hydraulic and electric brake systems—

Vehicles over 10,000 pounds; minimum performance requirements, etc.; comments due by 12-30-02; published 10-30-02 [FR 02-27526]

Transportation Recall Enhancement, Accountability, and Documentation (TREAD) Act; implementation—

Tire safety information; comments due by 1-2-03; published 11-18-02 [FR 02-28682]

TREASURY DEPARTMENT

Alcohol, Tobacco and Firearms Bureau

Alcohol; viticultural area designations:

Red Hill, Douglas County, OR; comments due by 12-30-02; published 10-30-02 [FR 02-27444]

Red Hills, Lake County, CA; comments due by 12-30-02; published 10-30-02 [FR 02-27443]

TREASURY DEPARTMENT

Internal Revenue Service

Income taxes:

Relative values of optional forms of benefit; disclosure; comments due by 1-2-03; published 10-7-02 [FR 02-25338]

VETERANS AFFAIRS DEPARTMENT

Disabilities rating schedule:

Skin

Multiple scars evaluation; comments due by 12-30-02; published 10-29-02 [FR 02-27408]

LIST OF PUBLIC LAWS

Note: The List of Public Laws for the second session of the 107th Congress has been completed. It will resume when bills are enacted into public law during the next session of Congress. A cumulative List of Public Laws for the second session of the 107th Congress will appear in the issue of January 31, 2003.

Last List December 24, 2002

Public Laws Electronic Notification Service (PENS)

PENS is a free electronic mail notification service of newly enacted public laws. To subscribe, go to *http://hydra.gsa.gov/archives/publaws-l.html* or send E-mail to **listserv@listserv.gsa.gov** with the following text message:

SUBSCRIBE PUBLAWS-L Your Name.

Note: PENS will resume service when bills are enacted into law during the next session of Congress. This service is strictly for E-mail notification of new laws. The text of laws is not available through this service. **PENS** cannot respond to specific inquiries sent to this address.