AUTHENTICATED
U.S. GOVERNMENT
INFORMATION
GPO

Federal Register

2–26–03 Wednesday
Vol. 68 No. 38 Feb. 26, 2003
Pages 8817–8988

The **FEDERAL REGISTER** is published daily, Monday through Friday, except official holidays, by the Office of the Federal Register, National Archives and Records Administration, Washington, DC 20408, under the Federal Register Act (44 U.S.C. Ch. 15) and the regulations of the Administrative Committee of the Federal Register (1 CFR Ch. I). The Superintendent of Documents, U.S. Government Printing Office, Washington, DC 20402 is the exclusive distributor of the official edition.

The **Federal Register** provides a uniform system for making available to the public regulations and legal notices issued by Federal agencies. These include Presidential proclamations and Executive Orders, Federal agency documents having general applicability and legal effect, documents required to be published by act of Congress, and other Federal agency documents of public interest.

Documents are on file for public inspection in the Office of the Federal Register the day before they are published, unless the issuing agency requests earlier filing. For a list of documents currently on file for public inspection, see http://www.archives.gov/federal__register/.

The seal of the National Archives and Records Administration authenticates the Federal Register as the official serial publication established under the Federal Register Act. Under 44 U.S.C. 1507, the contents of the **Federal Register** shall be judicially noticed.

The **Federal Register** is published in paper and on 24x microfiche. It is also available online at no charge as one of the databases on GPO Access, a service of the U.S. Government Printing Office.

The online edition of the **Federal Register** is issued under the authority of the Administrative Committee of the Federal Register as the official legal equivalent of the paper and microfiche editions (44 U.S.C. 4101 and 1 CFR 5.10). It is updated by 6 a.m. each day the **Federal Register** is published and it includes both text and graphics from Volume 59, Number 1 (January 2, 1994) forward.

GPO Access users can choose to retrieve online **Federal Register** documents as TEXT (ASCII text, graphics omitted), PDF (Adobe Portable Document Format, including full text and all graphics), or SUMMARY (abbreviated text) files. Users should carefully check retrieved material to ensure that documents were properly downloaded.

On the World Wide Web, connect to the **Federal Register** at http://www.access.gpo.gov/nara. Those without World Wide Web access can also connect with a local WAIS client, by Telnet to swais.access.gpo.gov, or by dialing (202) 512–1661 with a computer and modem. When using Telnet or modem, type swais, then log in as guest with no password.

For more information about GPO Access, contact the GPO Access User Support Team by E-mail at gpoaccess@gpo.gov; by fax at (202) 512–1262; or call (202) 512–1530 or 1–888–293–6498 (toll free) between 7 a.m. and 5 p.m. Eastern time, Monday–Friday, except Federal holidays.

The annual subscription price for the **Federal Register** paper edition is $699, or $764 for a combined **Federal Register, Federal Register** Index and List of CFR Sections Affected (LSA) subscription; the microfiche edition of the **Federal Register** including the **Federal Register** Index and LSA is $264. Six month subscriptions are available for one-half the annual rate. The charge for individual copies in paper form is $10.00 for each issue, or $10.00 for each group of pages as actually bound; or $2.00 for each issue in microfiche form. All prices include regular domestic postage and handling. International customers please add 25% for foreign handling. Remit check or money order, made payable to the Superintendent of Documents, or charge to your GPO Deposit Account, VISA, MasterCard or Discover. Mail to: New Orders, Superintendent of Documents, P.O. Box 371954, Pittsburgh, PA 15250–7954.

There are no restrictions on the republication of material appearing in the **Federal Register.**

How To Cite This Publication: Use the volume number and the page number. Example: 68 FR 12345.

SUBSCRIPTIONS AND COPIES

PUBLIC

Subscriptions:

Paper or fiche	**202–512–1800**
Assistance with public subscriptions	**202–512–1806**

General online information **202–512–1530; 1–888–293–6498**

Single copies/back copies:

Paper or fiche	**202–512–1800**
Assistance with public single copies	**1–866–512–1800 (Toll-Free)**

FEDERAL AGENCIES

Subscriptions:

Paper or fiche	**202–741–6005**
Assistance with Federal agency subscriptions	**202–741–6005**

What's NEW!

Federal Register Table of Contents via e-mail

Subscribe to FEDREGTOC, to receive the **Federal Register** Table of Contents in your e-mail every day.

If you get the HTML version, you can click directly to any document in the issue.

To subscribe, go to **http://listserv.access.gpo.gov** and select:

Online mailing list archives
FEDREGTOC-L
Join or leave the list

Then follow the instructions.

Printed on recycled paper.

Contents

Federal Register

Vol. 68, No. 38

Wednesday, February 26, 2003

Agency for Healthcare Research and Quality
NOTICES
Meetings:
Health Care Policy and Research Special Emphasis Panel, 8906–8907

Agriculture Department
See Animal and Plant Health Inspection Service
See Food Safety and Inspection Service
See Forest Service
See Natural Resources Conservation Service

American Battle Monuments Commission
RULES
Freedom of Information Act; implementation, 8825–8829

Animal and Plant Health Inspection Service
RULES
Plant-related quarantine, domestic:
Mexican fruit fly, 8817–8820

Commerce Department
See National Oceanic and Atmospheric Administration
See National Telecommunications and Information Administration
NOTICES
Agency information collection activities; proposals, submissions, and approvals, 8876–8877

Comptroller of the Currency
NOTICES
National banks:
Preemption determinations—
National City Bank, N.A., et al.; nonapplication of Georgia Fair Lending Act, 8959–8964

Consumer Product Safety Commission
NOTICES
Meetings; Sunshine Act, 8878

Defense Department
RULES
Freedom of Information Act; implementation, 8825
Wildfire Suppression Aircraft Transfer Act of 1996; implementation, 8822–8824

Education Department
NOTICES
Grants and cooperative agreements; availability, etc.:
Special education and rehabilitative services—
Experimental and Innovative Training Program, 8969–8973
Migrant and Seasonal Farmworkers Program; individuals with disabilities, 8878–8879

Employment and Training Administration
NOTICES
Alien temporary employment labor certification process:
Agriculture and logging; adverse effect wage rates, meal charges, and maximum travel subsistence reimbursement, 8929–8930

Energy Department
See Federal Energy Regulatory Commission
NOTICES
Meetings:
Environmental Management Site-Specific Advisory Board—
Oak Ridge Reservation, TN, 8879–8880
Natural gas exportation and importation:
Berkshire Gas Co. et al., 8880–8881

Environmental Protection Agency
RULES
Air quality implementation plans; approval and promulgation; various States:
California, 8830–8841
Kansas, 8845–8847
Virginia; correction, 8841–8845
Pesticides; tolerances in food, animal feeds, and raw agricultural commodities:
Polymers, low-risk, 8847–8856
PROPOSED RULES
Air quality implementation plans; approval and promulgation; various States:
California, 8868–8871
Kansas, 8871
NOTICES
Agency information collection activities; proposals, submissions, and approvals, 8887–8892
Confidential business information and data transfer, 8892–8895
Meetings:
Ozone Transport Commission, 8895
Pesticide, food, and feed additive petitions:
Syngenta Crop Protection, Inc., 8896–8900
Pesticides; experimental use permits, etc.:
Valent BioSciences Corp., 8900–8901
Toxic and hazardous substances control:
Endocrine Disruptor Screening Program; chemical selection approach for initial list, 8901–8902
Interagency Testing Committee report—
Receipt and comment request, 8975–8988
Water pollution; discharge of pollutants (NPDES):
Colorado; Federal facility small municipal separate storm sewer systems; storm water discharges; general permit, 8902–8903

Federal Aviation Administration
PROPOSED RULES
Airworthiness directives:
Bell, 8862–8864
Schweizer Aircraft Corp., 8865–8868

Federal Energy Regulatory Commission
NOTICES
Electric rate and corporate regulation filings:
Consumers Energy Co. et al., 8885–8886
Pacific Gas & Electric Co. et al., 8886–8887
Applications, hearings, determinations, etc.:
CenterPoint Energy Gas Transmission Co., 8881
Great Lakes Gas Transmission L.P., 8881–8882
Honeoye Storage Corp., 8882
Iroquois Gas Transmission System, L.P., 8882–8883

Kern River Gas Transmission Co., 8883
MIGC, Inc., 8883
Natural Gas Pipeline Co. of America, 8883–8884
PG&E Gas Transmission, Northwest Corp., 8884
Portland Natural Gas Transmission System, 8884–8885
Texas Eastern Transmission, LP, 8885

Federal Maritime Commission
NOTICES
Agreements filed, etc., 8903

Federal Reserve System
NOTICES
Banks and bank holding companies:
Formations, acquisitions, and mergers, 8903–8904

Federal Trade Commission
NOTICES
Meetings:
Technologies for protecting personal information, consumer and business experience; workshops, 8904–8906

Financial Management Service
See Fiscal Service

Fiscal Service
NOTICES
Privacy Act:
Systems of records, 8964–8965

Fish and Wildlife Service
NOTICES
Boundary establishment, descriptions, etc.:
Kodiak National Wildlife Refuge, AK, 8922–8923

Food and Drug Administration
NOTICES
Agency information collection activities; proposals, submissions, and approvals, 8907–8908
Biological product licenses:
Delmont Laboratories, Inc.; revocation hearing, 8908–8910
Meetings:
Phenoxy Herbicides and Contaminants Possible Long-Term Health Effects Special Studies Advisory Committee, 8910

Food Safety and Inspection Service
PROPOSED RULES
Meat, poultry, and egg products inspection services; fee changes, 8858–8860

Forest Service
NOTICES
Environmental statements; availability, etc.:
Payette National Forest, ID, 8874
Environmental statements; notice of intent:
Caribou-Targhee National Forest, ID, 8874–8875
Malheur National Forest, OR; correction, 8967
Meetings:
Opal Creek Scenic Recreation Area Advisory Council, 8875
Resource Advisory Committees—
Glenn/Colusa County, 8875–8876

General Accounting Office
NOTICES
Reports and guidance documents; availability, etc.:
Joint Financial Management Improvement Program; Federal Financial Management System Requirements, 8906

Health and Human Services Department
See Agency for Healthcare Research and Quality
See Food and Drug Administration

Housing and Urban Development Department
NOTICES
Agency information collection activities; proposals, submissions, and approvals, 8910–8920
Privacy Act:
Computer matching programs, 8920–8922

Immigration and Naturalization Service
RULES
Emergency Federal law enforcement assistance:
State and local law enforcement officers authorized to enforce immigration law during mass influx of aliens; training abbreviation or waiver, 8820–8822
NOTICES
Immigration:
Nonimmigrants registration and monitoring; ports-of-entry designated for departure of aliens subject to special registration
Correction, 8967–8968

Interior Department
See Fish and Wildlife Service
See Land Management Bureau
See Reclamation Bureau

Internal Revenue Service
PROPOSED RULES
Income taxes:
Controlled foreign partnerships; filing requirements, cross-reference; hearing cancellation, 8868
Outbound liquidations to foreign corporations; anti-abuse rule; hearing cancellation, 8868
NOTICES
Agency information collection activities; proposals, submissions, and approvals, 8965–8966
Meetings:
Taxpayer Advocacy Panels, 8966

International Trade Commission
NOTICES
Import investigations:
Screen printing machines, vision alignment devices, and component parts, 8924–8925
Stainless steel plate from—
Various countries, 8925–8926
Steel wire garment hangers from—
China, 8926

Justice Department
See Immigration and Naturalization Service
NOTICES
Environmental statements; availability, etc.:
Community Oriented Policing Services—
Methamphetamine/Drug Hot Spots Program, 8926–8927
Pollution control; consent judgments:
Certus, Inc., 8927
Hammond, Danny, 8927

Labor Department
See Employment and Training Administration
NOTICES
International Labor Affairs Bureau:
Chile; labor rights and laws governing exploitative child labor, 8928

Land Management Bureau
NOTICES
Environmental statements; availability, etc.:
Coos County, OR; natural gas pipeline, 8923
Protraction diagram plat filings:
Montana, 8923

Legal Services Corporation
RULES
Legal assistance eligibility; maximum income guidelines
Correction, 8856–8857

National Aeronautics and Space Administration
NOTICES
Inventions, Government-owned; availability for licensing, 8930–8931
Meetings:
Advisory Council
Space Science Advisory Committee, 8932

National Credit Union Administration
PROPOSED RULES
Credit unions:
Involuntary liquidation regulation—
Swap agreements; treatment as qualified financial contracts in liquidation or conservatorship, 8860–8862

National Oceanic and Atmospheric Administration
PROPOSED RULES
Fishery conservation and management:
Magnuson-Stevens Act provisions—
Domestic fisheries; exempted fishing permit applications, 8871–8873

National Science Foundation
NOTICES
Agency information collection activities; proposals, submissions, and approvals, 8932–8935

National Telecommunications and Information Administration
NOTICES
Electronic Signatures in Global and National Commerce Act:
Exceptions review, 8877

Natural Resources Conservation Service
NOTICES
Field office technical guides; changes:
Michigan, 8876
Tennessee, 8876

Nuclear Regulatory Commission
NOTICES
Applications, hearings, determinations, etc.:
BWX Technologies, Inc., 8935–8936
Framatome Advanced Nuclear Power, Inc., 8936–8939
Global Nuclear Fuel-Americas, LLC, 8940–8941
Power Resources, Inc., 8941–8942
Westinghouse Electric Co., LLC, 8942–8944

Postal Service
NOTICES
Meetings; Sunshine Act, 8944

Public Debt Bureau
See Fiscal Service

Reclamation Bureau
NOTICES
Environmental statements; notice of intent:
Humboldt Project Conveyance, NV, 8924

Research and Special Programs Administration
NOTICES
Hazardous materials:
Applications; exemptions, renewals, etc., 8956–8958

Securities and Exchange Commission
NOTICES
Investment Company Act of 1940:
Exemption applications—
Eaton Vance Variable Trust et al., 8944–8951
Order applications—
Lincoln National Life Insurance Co. et al., 8951–8955
Self-regulatory organizations; proposed rule changes:
Chicago Stock Exchange, Inc., 8955–8956
Philadelphia Stock Exchange, Inc., 8956

Transportation Department
See Federal Aviation Administration
See Research and Special Programs Administration
See Transportation Statistics Bureau

Transportation Statistics Bureau
NOTICES
Agency information collection activities; proposals, submissions, and approvals, 8958–8959

Treasury Department
See Comptroller of the Currency
See Fiscal Service
See Internal Revenue Service

Separate Parts In This Issue

Part II
Education Department, 8969–8973

Part III
Environmental Protection Agency, 8975–8988

Reader Aids

Consult the Reader Aids section at the end of this issue for phone numbers, online resources, finding aids, reminders, and notice of recently enacted public laws.

To subscribe to the Federal Register Table of Contents LISTSERV electronic mailing list, go to http://listserv.access.gpo.gov and select Online mailing list archives, FEDREGTOC-L, Join or leave the list (or change settings); then follow the instructions.

CFR PARTS AFFECTED IN THIS ISSUE

A cumulative list of the parts affected this month can be found in the Reader Aids section at the end of this issue.

7 CFR
301.....8817

9 CFR
Proposed Rules:
391.....8858
590.....8858
592.....8858

12 CFR
Proposed Rules:
709.....8860

14 CFR
Proposed Rules:
39 (2 documents) 8862, 8865

26 CFR
Proposed Rules:
1 (2 documents) 8868

28 CFR
65.....8820

32 CFR
171.....8822
285.....8825

36 CFR
404.....8825

40 CFR
52 (6 documents) ...8830, 8835, 8838, 8839, 8841, 8845
180.....8847
Proposed Rules:
52 (4 documents) ...8868, 8869, 8871

45 CFR
1611.....8856

50 CFR
Proposed Rules:
600 (2 documents) 8871, 8872

Rules and Regulations

Federal Register
Vol. 68, No. 38
Wednesday, February 26, 2003

This section of the FEDERAL REGISTER contains regulatory documents having general applicability and legal effect, most of which are keyed to and codified in the Code of Federal Regulations, which is published under 50 titles pursuant to 44 U.S.C. 1510.

The Code of Federal Regulations is sold by the Superintendent of Documents. Prices of new books are listed in the first FEDERAL REGISTER issue of each week.

DEPARTMENT OF AGRICULTURE

Animal and Plant Health Inspection Service

7 CFR Part 301

[Docket No. 02–129–2]

Mexican Fruit Fly; Treatments

AGENCY: Animal and Plant Health Inspection Service, USDA.

ACTION: Interim rule and request for comments.

SUMMARY: We are amending the Mexican fruit fly regulations to allow the use of irradiation as a treatment for fruits listed as regulated articles. This action will provide an additional option for qualifying those regulated articles for movement from regulated areas.

DATES: This interim rule was effective February 20, 2003. We will consider all comments that we receive on or before April 28, 2003.

ADDRESSES: You may submit comments by postal mail/commercial delivery or by e-mail. If you use postal mail/commercial delivery, please send four copies of your comment (an original and three copies) to: Docket No. 02–129–2, Regulatory Analysis and Development, PPD, APHIS, Station 3C71, 4700 River Road Unit 118, Riverdale, MD 20737–1238. Please state that your comment refers to Docket No. 02–129–2. If you use e-mail, address your comment to *regulations@aphis.usda.gov.* Your comment must be contained in the body of your message; do not send attached files. Please include your name and address in your message and ''Docket No. 02–129–2'' on the subject line.

You may read any comments that we receive on this docket in our reading room. The reading room is located in room 1141 of the USDA South Building, 14th Street and Independence Avenue SW., Washington, DC. Normal reading room hours are 8 a.m. to 4:30 p.m., Monday through Friday, except holidays. To be sure someone is there to help you, please call (202) 690–2817 before coming.

APHIS documents published in the **Federal Register**, and related information, including the names of organizations and individuals who have commented on APHIS dockets, are available on the Internet at *http://www.aphis.usda.gov/ppd/rad/webrepor.html.*

FOR FURTHER INFORMATION CONTACT: Mr. Stephen A. Knight, Senior Staff Officer, PPQ, APHIS, 4700 River Road Unit 134, Riverdale, MD 20737–1236; (301) 734–8247.

SUPPLEMENTARY INFORMATION: The Mexican fruit fly *(Anastrepha ludens)* is a destructive pest of citrus and many other types of fruit. The short life cycle of the Mexican fruit fly allows rapid development of serious outbreaks that can cause severe economic losses in commercial citrus-producing areas.

The Mexican fruit fly regulations, contained in 7 CFR 301.64 through 301.64–10 (referred to below as the regulations), were established to prevent the spread of the Mexican fruit fly to noninfested areas of the United States. The regulations impose restrictions on the interstate movement of regulated articles from the regulated areas.

We are amending the Mexican fruit fly regulations to include irradiation as a treatment for those fruits that are listed as regulated articles in § 301.64–2(a) of the regulations. Without irradiation, the only treatments for fruit made available by the regulations have been cold treatment, fumigation, or high-temperature forced air, and those treatments have been made available for only some of the fruits listed as regulated articles. The addition of irradiation provides a treatment option for use on those regulated articles for which treatments have been available, as well as for those regulated articles for which no treatments have been listed in the regulations.

To accommodate the inclusion of irradiation as an authorized treatment under the Mexican fruit fly regulations, we are amending § 301.64–10, ''Treatments,'' by adding the irradiation provisions as a new paragraph (g).

The provisions we are adding to the Mexican fruit fly regulations for the use of irradiation as a treatment are, for all practical purposes, the same as those provided in § 301.78–10(c) of ''Subpart-Mediterranean Fruit Fly'' (7 CFR 301.78 through 318.78–10), which provides for the use of irradiation as a treatment for nuts, berries, fruits, and vegetables grown in areas quarantined because of the Mediterranean fruit fly *(Ceratitis capitata).* The irradiation provisions we have added to the Mexican fruit fly regulations differ from those of § 301.78–10(c) in only two substantive respects: (1) The pest (*A. ludens* rather than *C. capitata*) and commodities for which irradiation is an approved treatment and (2) the prescribed irradiation dose rate. These two differences are discussed below.

With respect to the first difference cited above-the commodities for which irradiation is an authorized treatment-the irradiation provisions we are adding to the Mexican fruit fly regulations will provide for the use of irradiation to treat several commodities that are listed as regulated articles in the Mexican fruit fly regulations that are not also listed as regulated articles under the Mediterranean fruit fly regulations. Those additional commodities are as follows:

Cherimoya (*Annona cherimola*)
Custard apple (*Annona reticulata*)
Mamey (*Mammea americana*)
Sapota, Sapodilla (*Sapotaceae*)
Sargentia, yellow chapote (*Sargentia greggii*)
Spanish plum, purple mombin or Ciruela (*Spondias spp.*)

As noted in APHIS' policy statement regarding the application of irradiation to phytosanitary problems (published in the **Federal Register** on May 15, 1996, 61 FR 24433–24439, Docket No. 95–088–1), the U.S. Department of Agriculture's (USDA's) Agricultural Research Service (ARS) conducted exhaustive research to determine commodity-generic irradiation dose rates that will provide an acceptable level of quarantine security with regard to certain pests. Given that a commodity-generic dose rate has been established for Mexican fruit fly, we believe that it is appropriate to provide the prescribed irradiation treatment as an option for growers of any of the fruits listed as regulated articles in § 301.64–2(a) who wish to obtain certification for the interstate movement of their commodities on the basis of treatment.

The second difference cited above pertains to the prescribed irradiation dose rate. The commodity-generic dose rate established by ARS for Mexican fruit fly is 150 Gray (15 krad), so we have established 150 Gray as the prescribed dose rate in the Mexican fruit fly regulations, rather than the 225 Gray (22.5 krad) prescribed in § 301.78–10(c) of the Mediterranean fruit fly regulations.

The remaining provisions of § 301.78–10(c) of the Mediterranean fruit fly regulations—*i.e.*, those provisions regarding approved facilities, treatment monitoring, packaging, dosimetry systems, certification based on treatment, recordkeeping, requests for approval and inspection of facilities, denial and withdrawal of approval, and the USDA's non-responsibility for loss or damage resulting from treatment—have been carried over to § 301.64–10(g) of the Mexican fruit fly regulations and serve the same purpose as in § 301.78–10(c).

Emergency Action

This rulemaking is necessary on an emergency basis to provide an additional option for qualifying regulated articles for movement from regulated areas. Under these circumstances, the Administrator has determined that prior notice and opportunity for public comment are contrary to the public interest and that there is good cause under 5 U.S.C. 553 for making this rule effective less than 30 days after publication in the **Federal Register**.

We will consider comments we receive during the comment period for this interim rule (see **DATES** above). After the comment period closes, we will publish another document in the **Federal Register**. The document will include a discussion of any comments we receive and any amendments we are making to the rule.

Executive Order 12866 and Regulatory Flexibility Act

This rule has been reviewed under Executive Order 12866. For this action, the Office of Management and Budget has waived its review under Executive Order 12866.

This rule amends the Mexican fruit fly regulations by allowing the use of irradiation as a treatment for fruits listed as regulated articles. This action will provide an additional option for qualifying those regulated articles for movement from regulated areas.

This emergency situation makes timely compliance with section 604 of the Regulatory Flexibility Act (5 U.S.C. 601 *et seq.*) impracticable. We are currently assessing the potential economic effects of this action on small entities. Based on that assessment, we will either certify that the rule will not have a significant economic impact on a substantial number of small entities or publish a final regulatory flexibility analysis.

Executive Order 12372

This program/activity is listed in the Catalog of Federal Domestic Assistance under No. 10.025 and is subject to Executive Order 12372, which requires intergovernmental consultation with State and local officials. (*See* 7 CFR part 3015, subpart V.)

Executive Order 12988

This rule has been reviewed under Executive Order 12988, Civil Justice Reform. This rule: (1) Preempts all State and local laws and regulations that are inconsistent with this rule; (2) has no retroactive effect; and (3) does not require administrative proceedings before parties may file suit in court challenging this rule.

Paperwork Reduction Act

In accordance with section 3507(j) of the Paperwork Reduction Act of 1995 (44 U.S.C. 3501 *et seq.*), the information collection and recordkeeping requirements included in this interim rule have been submitted for emergency approval to the Office of Management and Budget (OMB). OMB has assigned control number 0579–0215 to the information collection and recordkeeping requirements.

We plan to request continuation of that approval for 3 years. Please send written comments on the 3-year approval request to the following addresses: (1) Office of Information and Regulatory Affairs, OMB, Attention: Desk Officer for APHIS, Washington, DC 20503; and (2) Docket No. 02–129–2, Regulatory Analysis and Development, PPD, APHIS, Station 3C71, 4700 River Road Unit 118, Riverdale, MD 20737–1238. Please state that your comments refer to Docket No. 02–129–2 and send your comments within 60 days of publication of this rule.

This interim rule allows for the use of irradiation as a treatment for those fruits that are listed as regulated articles in § 301.64–2(a) of the regulations. This action provides an additional option for qualifying regulated articles for movement from regulated areas. Any person engaged in the business of growing, handling, or moving regulated articles may enter into a compliance agreement to facilitate the movement of regulated articles under § 301.64–6. The compliance agreement is a written agreement between a person engaged in those previously mentioned activities and Plant Protection and Quarantine, wherein the person agrees to comply with the provisions set forth in § 301.64–6. We are soliciting comments from the public (as well as affected agencies) concerning our information collection and recordkeeping requirements. These comments will help us:

(1) Evaluate whether the information collection is necessary for the proper performance of our agency's functions, including whether the information will have practical utility;

(2) Evaluate the accuracy of our estimate of the burden of the information collection, including the validity of the methodology and assumptions used;

(3) Enhance the quality, utility, and clarity of the information to be collected; and

(4) Minimize the burden of the information collection on those who are to respond (such as through the use of appropriate automated, electronic, mechanical, or other technological collection techniques or other forms of information technology; *e.g.*, permitting electronic submission of responses).

Estimate of burden: Public reporting burden for this collection of information is estimated to average .6399 hours per response.

Respondents: Growers and State plant regulatory officials.

Estimated annual number of respondents: 722.

Estimated annual number of responses per respondent: 1.

Estimated annual number of responses: 722.

Estimated total annual burden on respondents: 462 hours. (Due to averaging, the total annual burden hours may not equal the product of the annual number of responses multiplied by the reporting burden per response.)

Copies of this information collection can be obtained from Mrs. Celeste Sickles, APHIS' Information Collection Coordinator, at (301) 734–7477.

Government Paperwork Elimination Act Compliance

The Animal and Plant Health Inspection Service is committed to compliance with the Government Paperwork Elimination Act (GPEA), which requires Government agencies in general to provide the public the option of submitting information or transacting business electronically to the maximum extent possible. For information pertinent to GPEA compliance related to this interim rule, please contact Mrs. Celeste Sickles, APHIS' Information

Collection Coordinator, at (301) 734–7477.

List of Subjects in 7 CFR Part 301

Agricultural commodities, Plant diseases and pests, Quarantine, Reporting and recordkeeping requirements, Transportation.

Accordingly, we are amending 7 CFR part 301 as follows:

PART 301—DOMESTIC QUARANTINE NOTICES

1. The authority citation for part 301 continues to read as follows:

Authority: 7 U.S.C. 7711, 7712, 7714, 7731, 7735, 7751, 7752, 7753, 7754, and 7760; 7 CFR 2.22, 2.80, and 371.3.

Section 301.75–15 also issued under Sec. 204, Title II, Pub. L. 106–113, 113 Stat. 1501A–293; sections 301.75–15 and 301.75–16 also issued under Sec. 203, Title II, Pub. L. 106–224, 114 Stat. 400 (7 U.S.C. 1421 note).

2. In § 301.64–10, a new paragraph (g) is added to read as follows:

§ 301.64–10 Treatments.

* * * * *

(g) *Approved irradiation treatment.* Irradiation, carried out in accordance with the provisions of this paragraph, is approved as a treatment for any fruit listed as a regulated article in § 301.64–2(a).

(1) *Approved facility.* The irradiation treatment facility and treatment protocol must be approved by the Animal and Plant Health Inspection Service. In order to be approved, a facility must:

(i) Be capable of administering a minimum absorbed ionizing radiation dose of 150 Gray (15 krad) to the fruit; [8]

(ii) Be constructed so as to provide physically separate locations for treated and untreated fruit, except that fruit traveling by conveyor directly into the irradiation chamber may pass through an area that would otherwise be separated. The locations must be separated by a permanent physical barrier such as a wall or chain link fence 6 or more feet high to prevent transfer of cartons;

(iii) Complete a compliance agreement with the Animal and Plant Health Inspection Service as provided in § 301.64–6; and

(iv) Be certified by Plant Protection and Quarantine for initial use and annually for subsequent use. Recertification is required in the event that an increase or decrease in radioisotope or a major modification to equipment that affects the delivered dose. Recertification may be required in cases where a significant variance in dose delivery is indicated.

(2) *Treatment monitoring.* Treatment must be carried out under the monitoring of an inspector. This monitoring must include inspection of treatment records and unannounced inspection visits to the facility by an inspector. Facilities that carry out continual irradiation operations must notify an inspector at least 24 hours before the date of operations. Facilities that carry out periodic irradiation operations must notify an inspector of scheduled operations at least 24 hours before scheduled operations.[9]

(3) *Packaging.* Fruits and vegetables that are treated within a quarantined area must be packaged in the following manner:

(i) The cartons must have no openings that will allow the entry of fruit flies and must be sealed with seals that will visually indicate if the cartons have been opened. They may be constructed of any material that prevents the entry of fruit flies and prevents oviposition by fruit flies into the fruit in the carton.[10]

(ii) The pallet-load of cartons must be wrapped before it leaves the irradiation facility in one of the following ways:

(A) With polyethylene sheet wrap;

(B) With net wrapping; or

(C) With strapping so that each carton on an outside row of the pallet load is constrained by a metal or plastic strap.

(iii) Packaging must be labeled with treatment lot numbers, packing and treatment facility identification and location, and dates of packing and treatment.

(4) *Dosage.* The fruits and vegetables must receive a minimum absorbed ionizing radiation dose of 150 Gray (15 krad).[11]

(5) *Dosimetry systems.* (i) Dosimetry mapping must indicate the dose needed to ensure the fruit will receive the minimum dose prescribed.

(ii) Absorbed dose must be measured using an accurate dosimetry system that ensures that the absorbed dose meets or exceeds 150 Gray (15 krad).

(iii) When designing the facility's dosimetry system and procedures for its operation, the facility operator must address guidance and principles from American Society for Testing and Materials (ASTM) standards.[12]

(6) *Records.* Records or invoices for each treated lot must be made available for inspection by an inspector during normal business hours (8 a.m. to 4:30 p.m., Monday through Friday, except holidays). An irradiation processor must maintain records as specified in this section for a period of time that exceeds the shelf life of the irradiated food product by 1 year, and must make these records available for inspection by an inspector. These records must include the lot identification, scheduled process, evidence of compliance with the scheduled process, ionizing energy source, source calibration, dosimetry, dose distribution in the product, and the date of irradiation.

(7) *Request for approval and inspection of facility.* Persons requesting approval of an irradiation treatment facility and treatment protocol must submit the request for approval in writing to the Animal and Plant Health Inspection Service, Plant Protection and Quarantine, Oxford Plant Protection Center, 901 Hillsboro St., Oxford, NC 27565. Before the Administrator determines whether an irradiation facility is eligible for approval, an inspector will make a personal inspection of the facility to determine whether it complies with the standards of paragraph (g)(1) of this section.

(8) *Denial and withdrawal of approval.* (i) The Administrator will withdraw the approval of any irradiation treatment facility when the irradiation processor requests in writing the withdrawal of approval.

(ii) The Administrator will deny or withdraw approval of an irradiation treatment facility when any provision of this section is not met. Before withdrawing or denying approval, the Administrator will inform the irradiation processor in writing of the reasons for the proposed action and provide the irradiation processor with an opportunity to respond. The Administrator will give the irradiation processor an opportunity for a hearing regarding any dispute of a material fact, in accordance with rules of practice that will be adopted for the proceeding. However, the Administrator will suspend approval pending final determination in the proceeding, if he or she determines that suspension is necessary to prevent the spread of any dangerous insect infestation. The suspension will be effective upon oral

[8] The maximum absorbed ionizing radiation dose and the irradiation of food are regulated by the Food and Drug Administration under 21 CFR part 179.

[9] Inspectors are assigned to local offices of the Animal and Plant Health Inspection Service, which are listed in telephone directories.

[10] If there is a question as to the adequacy of a carton, send a request for approval of the carton, together with a sample carton, to the Animal and Plant Health Inspection Service, Plant Protection and Quarantine, Oxford Plant Protection Center, 901 Hillsboro St., Oxford, NC 27565.

[11] See footnote 8.

[12] Designation ISO/ASTM 51261–2002(E), ''Standard Guide for Selection and Calibration of Dosimetry Systems for Radiation Processing,'' American Society for Testing and Materials, *Annual Book of ASTM Standards.*

or written notification, whichever is earlier, to the irradiation processor. In the event of oral notification, written confirmation will be given to the irradiation processor within 10 days of the oral notification. The suspension will continue in effect pending completion of the proceeding and any judicial review of the proceeding.

(9) *Department not responsible for damage.* This treatment is approved to assure quarantine security against Mediterranean fruit fly. From the literature available, the fruits authorized for treatment under this section are believed tolerant to the treatment; however, the facility operator and shipper are responsible for determination of tolerance. The Department of Agriculture and its inspectors assume no responsibility for any loss or damage resulting from any treatment prescribed or supervised. Additionally, the Nuclear Regulatory Commission is responsible for ensuring that irradiation facilities are constructed and operated in a safe manner. Further, the Food and Drug Administration is responsible for ensuring that irradiated foods are safe and wholesome for human consumption.

(Approved by the Office of Management and Budget under control number 0579–0215.)

Done in Washington, DC, this 20th day of February 2003.

Bobby R. Acord,

Administrator, Animal and Plant Health Inspection Service.

[FR Doc. 03–4526 Filed 2–25–03; 8:45 am]

BILLING CODE 3410–34–P

DEPARTMENT OF JUSTICE

28 CFR Part 65

[INS No. 2241–02; AG Order No. 2659–2003]

RIN 1115–AG84

Abbreviation or Waiver of Training for State or Local Law Enforcement Officers Authorized To Enforce Immigration Law During a Mass Influx of Aliens

AGENCY: Immigration and Naturalization Service, Justice.

ACTION: Interim rule with request for comments.

SUMMARY: This rule amends Department of Justice regulations to authorize the Attorney General to waive normally required training requirements in the event that the number of State or local law enforcement officers available to respond in an expeditious manner to urgent and quickly developing events during a declared mass influx of aliens is insufficient to protect public safety, public health, or national security. This action is necessary to provide the Attorney General with the tools and flexibility to address any unanticipated situations that might occur during a mass influx of aliens.

DATES: *Effective date:* This interim rule is effective February 26, 2003.

Comment date. Written comments must be submitted on or before April 28, 2003.

ADDRESSES: Please submit written comments to the Regulations and Forms Services Division, Immigration and Naturalization Service, 425 I Street, NW., Room 4034, Washington, DC 20536. To ensure proper handling, please reference INS No. 2241–02 on your correspondence. You may also submit comments electronically at *insregs@usdoj.gov*. When submitting comments electronically you must include ''INS No. 2241–02'' in the subject box to ensure that the comments are properly routed to the appropriate office for review. Comments are available for public inspection at the above address by calling (202) 514–3291 to arrange for an appointment.

FOR FURTHER INFORMATION CONTACT: Ronald W. Dodson, Supervisory Special Agent, Director, Evaluation and Support Branch, Headquarters Office of Investigations, Immigration and Naturalization Service, 425 I Street, NW., Room 1000, Washington, DC 20536, telephone (202) 514–2998.

SUPPLEMENTARY INFORMATION: Section 372 of the Illegal Immigration Reform and Immigrant Responsibility Act of 1996, Pub. L. 104–208, Div. C., 110 Stat. 3009–646, amended section 103(a) of the Immigration and Nationality Act (''Act''), 8 U.S.C. 1103(a), to permit the Attorney General to authorize any State or local law enforcement officer, with the consent of the head of the department, agency, or establishment under whose jurisdiction the individual is serving, to perform or exercise any of the powers, privileges, or duties conferred or imposed by the Act or implementing regulations upon officers or employees of the Immigration and Naturalization Service (''Service'') during a period of a mass influx of aliens. Under section 103(a)(8) of the Act, the Attorney General may authorize State or local law enforcement officers to perform such powers, privileges, or duties only if the Attorney General determines that ''an actual or imminent mass influx of aliens arriving off the coast of the United States, or near a land border, presents urgent circumstances requiring an immediate Federal response.'' 8 U.S.C. 1103(a)(8).

The Department of Justice has published a final rule implementing this authority. See 67 FR 48354 (July 24, 2002). The rule detailed the procedures the Attorney General must follow when seeking assistance from a State or local government during a declared mass influx of aliens. In accordance with the rule, the Attorney General is required to execute written agreements with appropriate State or local officials that set forth the terms and conditions of the assistance before the State or local law enforcement officer may exercise immigration law enforcement authorities pursuant to section 103(a)(8) of the Act. The regulations also permit the Attorney General to enter into written contingency agreements prior to the declaration of a mass influx of aliens. All of the written agreements must include a requirement that State or local law enforcement officers cannot exercise any authorized functions of Service officers or employees under 8 U.S.C. 1103(a)(8) until they have successfully completed and been certified in a Service-prescribed course of instruction in basic immigration law, immigration law enforcement fundamentals and procedures, civil rights law, and sensitivity and cultural awareness issues. See 28 CFR 65.84(a)(3)(iv). Because of the need to respond quickly in the event of a mass influx of aliens, most of these State and local law enforcement officers likely will be trained pursuant to contingency agreements in place prior to any declared mass influx of aliens.

The Department recognizes the desirability for all State or local law enforcement officers to receive training prior to being authorized to exercise immigration law enforcement authority pursuant to section 103(a)(8) of the Act during a mass influx of aliens. Indeed, the Department fully anticipates that all State or local law enforcement officers authorized to exercise immigration law enforcement authority under the Act will have been certified in basic immigration law, immigration law enforcement fundamentals and procedures, civil rights law, and sensitivity and cultural awareness issues. While drafting the final rule, however, the Department realized that unanticipated situations might arise during a declared mass influx of aliens in which the number of State or local law enforcement officers trained pursuant to a written agreement would be insufficient to respond in an expeditious manner in order to protect public safety, public health, or national security. As a result of this concern, the Attorney General has determined that,

in exceptional circumstances, it would be prudent to allow the Attorney General to abbreviate or waive the normally required training for State and local law enforcement officers.

The Department believes that it will rarely be necessary for the Attorney General to declare a mass influx of aliens. As discussed below in the Regulatory Procedures Section, however, the Department believes that the country currently is facing an increased risk of a mass influx of aliens. In the event that a mass influx of aliens does occur, the need to abbreviate or waive the normally required training may be necessary if the Service does not receive enough advance knowledge of the mass influx of aliens or the influx occurs at an unanticipated location. The Department believes that it is necessary to provide the Attorney General with the tools and flexibility to address any unanticipated situations that might occur during a mass influx of aliens. Therefore, the Department is amending the applicable regulations to allow the Attorney General to abbreviate or waive the otherwise normally required training requirement when such an action is necessary to protect public safety, public health, or national security. Such officers, however, still would be required to adhere to applicable Service policies and standards.

This interim rule is intended to solicit comments from the public on the very limited issue of whether the regulations should allow for the abbreviation or waiver of the normal training requirement. The Department welcomes comments on steps that can be taken to minimize the need for the Attorney General to exercise his authority to abbreviate or waive training requirements in the event of a declared mass influx of aliens. In particular, the Department welcomes comments on how the written contingency agreements with the appropriate State or local officials could be formulated to help ensure that this authority would be exercised only under extraordinary circumstances. The Department does not intend to reconsider any of the other issues addressed by the final rulemaking.

It is important to note that even if State and local law enforcement officers have not completed the training devised by the Service, these individuals still are trained law enforcement officers and can be expected to respond in an appropriate manner. In addition, most, if not all, of the functions such State and local law enforcement officers would be asked to perform during a declared mass influx of aliens would not require detailed training in immigration matters. Rather, these individuals are likely to be asked only to apprehend, transport, or temporarily guard aliens who are part of the mass influx. As a result, the abbreviation or waiver of the normally required training requirement is not likely to affect the public in an adverse manner.

Regulatory Procedures

Good Cause

This interim rule is effective immediately upon the date of publication. The Department finds that good cause exists for adopting this rule without the prior notice ordinarily required by 5 U.S.C. 553(b) because a delay in the implementation of the rule would pose a substantial risk to public safety and national security.

The Department believes that the country currently is at risk for a mass influx of aliens. Present conditions in Haiti are prime for creating a mass migration to the United States. Not only have rising prices and the collapse of the informal banking sector worsened an already reeling economy, but a prolonged drought has afflicted the northwest portion of the country and severe floods have hit southern Haiti. Internal security in Haiti also has deteriorated.

Indeed, on October 29, 2002, a Haitian vessel beached off Biscayne Bay, Florida, with 214 predominantly Haitian aliens jumping off and wading ashore. Another 21 migrants were detained offshore by an United States Coast Guard (''USCG'') cutter. On November 8, 2002, the USCG interdicted 25 Haitians who were using a small wooden vessel to attempt a voyage to the United States. The interdiction took place off the coast of Haiti. Finally, on November 11, 2002, the USCG interdicted two wooden vessels carrying a total of 237 Haitians and one Bahamian, 30 miles south of Great Inagua, in the Bahamas.

At the present time, an insufficient number of State and local law enforcement officers who have completed the otherwise required immigration training are available to exercise immigration law enforcement authority pursuant to section 103(a)(8) of the Act in an expeditious manner in the event the Attorney General declares a mass influx of aliens. This lack of State and local officers who have completed training presents an immediate risk to public safety and national security. Therefore, the publication of this interim rule is necessary to provide the Attorney General with the tools and flexibility to address any unanticipated situations that might occur during a mass influx of aliens.

For the same reasons, the Department also finds that it has good cause to issue this interim rule with an immediate effective date, in accordance with 5 U.S.C. 553(d). Because additional delay is contrary to the public interest, there is good cause under 5 U.S.C. 553(d) to make this rule effective as of February 26, 2003.

Regulatory Flexibility Act

The Attorney General, in accordance with the Regulatory Flexibility Act (5 U.S.C. 605(b)), has reviewed this regulation and, by approving it, certifies that this rule will not have a significant economic impact on a substantial number of small entities. This rule allows the Attorney General to waive normally required training requirements in the event that the State or local law enforcement officers available to respond to a mass influx of aliens is insufficient to protect public safety, public health, or national security. Because this rule involves only the waiver of training requirements, it should impose little or no economic impact on small entities. Indeed, the exercise of this waiver may confer a small economic benefit on affected entities because they will not have to devote personnel and time for any training that is waived. Moreover, this rule does not affect a substantial number of small entities as that term is defined in 5 U.S.C. 601(6). Because of the remote chance of a mass influx of aliens occurring in most States, only a very few local law enforcement agencies are ever expected to enter into agreements with the Attorney General to exercise immigration law enforcement authorities pursuant to section 103(a)(8) of the Act. In addition, the decision of a small entity to participate in the event of a mass influx of aliens is purely voluntary on the part of the entity.

Unfunded Mandates Reform Act of 1995

This rule will not result in the expenditure by State, local, and tribal governments, in the aggregate, or by the private sector, of $100 million or more in any one year, and it will not significantly or uniquely affect small governments. Therefore, no actions were deemed necessary under the provisions of the Unfunded Mandates Reform Act of 1995.

Small Business Regulatory Enforcement Fairness Act of 1996

This rule is not a major rule as defined in the Small Business Regulatory Enforcement Fairness Act of

1996, 5 U.S.C. 804. This rule will not result in an annual effect on the economy of $100 million or more; a major increase in costs or prices; or significant adverse effects on competition, employment, investment, productivity, innovation, or on the ability of United States-based companies to compete with foreign-based companies in domestic and export markets.

Executive Order 12866

This rule is considered by the Department of Justice to be a ''significant regulatory action'' under section 3(f) of Executive Order 12866, Regulatory Planning and Review. Accordingly, this regulation has been submitted to the Office of Management and Budget for review.

Executive Order 13132

This regulation will not have substantial direct effects on the States, on the relationship between the national government and the states, or on the distribution of power and responsibilities among various levels of government. Participation by state or local law enforcement agencies is voluntary. Therefore, in accordance with section six of Executive Order 13132, it is determined that this rule does not have sufficient federalism implications to warrant the preparation of a federalism summary impact statement.

Executive Order 12988

This rule meets the applicable standards set forth in sections 3(a) and 3(b)(2) of Executive Order 12988, Civil Justice Reform.

List of Subjects in 28 CFR Part 65

Grant programs—law, Law enforcement, Reporting and recordkeeping requirements.

Accordingly, part 65 of chapter I of title 28 of the Code of Federal Regulations is amended as follows:

PART 65—EMERGENCY FEDERAL LAW ENFORCEMENT ASSISTANCE

1. The authority citation for part 65 continues to read as follows:

Authority: The Comprehensive Crime Control Act of 1984, Title II, Chap. VI, Div. I, Subdiv. B, Emergency Federal Law Enforcement Assistance, Pub. L. 98–473, 98 Stat. 1837, Oct. 12, 1984 (42 U.S.C. 10501 *et seq.*); 8 U.S.C. 1101 note; Sec. 610, Pub. L. 102–140, 105 Stat. 832.

2. Section 65.84 is amended by adding paragraph (a)(4), to read as follows:

§ 65.84 Procedures for the Attorney General when seeking State or local assistance.

(a) * * *

(4) The Attorney General may abbreviate or waive any of the training required pursuant to a written agreement regarding assistance under § 65.83(d) of this chapter, including contingency agreements, in the event that the number of State or local law enforcement officers available to respond in an expeditious manner to urgent and quickly developing events during a declared mass influx of aliens is insufficient to protect public safety, public health, or national security. Such officers still would be required to adhere to applicable policies and standards of the Immigration and Naturalization Service. The decision to abbreviate or waive these training requirements is at the sole discretion of the Attorney General.

* * * * *

Dated: February 20, 2003.

John Ashcroft,

Attorney General.

[FR Doc. 03–4441 Filed 2–25–03; 8:45 am]

BILLING CODE 4410–10–P

DEPARTMENT OF DEFENSE

Office of the Secretary

32 CFR Part 171

RIN 0790–AG95

Implementation of Wildfire Suppression Aircraft Transfer Act of 1996

AGENCY: Department of Defense.

ACTION: Final rule.

SUMMARY: This final rule adds regulations on the Implementation of Wildfire Suppression Aircraft Transfer Act of 1996 back into the Code of Federal Regulations. This rule was published as an Interim Final Rule on June 1, 1999 (64 FR 29227) and was inadvertently removed on October 25, 2001 (66 FR 53957). The Wildfire Suppression Aircraft Transfer Act of 1996 authorized the Department of Defense (DOD), during the period 1 October 1996 through 30 September 2000, to sell aircraft and aircraft parts to entities that contract with the Federal Government for the delivery of fire retardant by air in order to suppress wildfire. Public Law 106–398 (114 STAT. 1654A–89) extended the expiration date from 30 September 2000 to 30 September 2005.

EFFECTIVE DATE: This rule is effective August 1, 2002.

FOR FURTHER INFORMATION CONTACT: Debra Bennett, 703–604–0098.

SUPPLEMENTARY INFORMATION: Public comment was taken on the Interim Final Rule. No comments were received.

I. Background

Subsection 2(a) of the Wildfire Suppression Aircraft Transfer Act of 1996, as amended, states that, notwithstanding subchapter II of chapter 5 of title 40, United States Code and subject to subsections (b) and (c), the Secretary of Defense may, during the period beginning on October 1, 1996, and ending on September 30, 2005, sell certain aircraft and aircraft parts to persons or entities that contract with the Federal Government for the delivery of fire retardant by air in order to suppress wildfire. The Act states that, as soon as practicable after the date of the enactment of the Act, the Secretary of Defense shall, in consultation with the Secretary of Agriculture and the Administrator of General Services, prescribe regulations relating to the sale of aircraft and aircraft parts under this section. This rule prescribes such regulations.

II. Administrative Requirements

A. Executive Order 12866

It has been determined that 32 CFR part 171 is not a significant regulatory action. The rule does not (1) Have an annual effect on the economy of $100 million or more or adversely affect in a material way the economy, a sector of the economy, productivity, competition, jobs, the environment, public health or safety, or State, local, or tribal governments or communities; (2) create a serious inconsistency or otherwise interfere with an action taken or planned by another agency; (3) materially alter the budgetary impact of entitlements, grants, user fees, or loan programs, or the rights and obligations of the recipients thereof; or (4) raise novel legal or policy issues arising out of legal mandates, the President's priorities, or the principles set forth in this Executive Order.

B. Unfunded Mandates Reform Act

It has been certified that 32 CFR part 171 does not contain a Federal Mandate that may result in the expenditure by State, local and tribal governments, in the aggregate, or by the private sector, of $100 million or more in any one year.

C. Regulatory Flexibility Act

It has been determined that this rule is not subject to the Regulatory

Flexibility Act (5 U.S.C. 601) because it would not, if promulgated, have a significant economic impact on a substantial number of small entities. This rule applies only to the sale of certain aircraft and aircraft parts to those entities that contract for the delivery of fire retardant by air in order to suppress wildfire. The U.S. Department of Agriculture provides the list of eligible entities that may bid on aircraft and aircraft parts.

D. Paperwork Reduction Act

It has been certified that 32 CFR part 171 does not impose any reporting or recordkeeping requirements under the Paperwork Reduction Act of 1995 (44 U.S.C. Chapter 44).

E. Executive Order 13132

It has been certified that 32 CFR part 171 does not have federalism implications, as set forth in Executive Order 13132.

List of Subjects in 32 CFR Part 171

Aircraft, Fire prevention.

According, 32 CFR Part 171 is added to read as follows:

PART 171—IMPLEMENTATION OF WILDFIRE SUPPRESSION AIRCRAFT TRANSFER ACT OF 1996

Sec.
171.1 Background and purpose.
171.2 Applicability.
171.3 Restrictions.
171.4 Qualifications.
171.5 Sale procedures.
171.6 Reutilization and transfer procedures.
171.7 Reporting requirements.
171.8 Expiration.

Authority: 10 U.S.C. 2576 note.

§ 171.1 Background and purpose.

The Wildfire Suppression Aircraft Transfer Act of 1996 (the ''Act''), as amended, allows the Department of Defense (DOD), during the period 1 October 1996 through 30 September 2005, to sell aircraft and aircraft parts to entities that contract with the Federal Government for the delivery of fire retardant by air in order to suppress wildfire. This part implements the Act.

§ 171.2 Applicability.

The regulations in this part apply to aircraft and aircraft parts determined to be DOD excess under the definition of the Federal Property Management Regulations (FPMR) and listed in Attachment 1 of Chapter 4 of DOD 4160.21–M as Category A aircraft authorized for commercial use.

§ 171.3 Restrictions.

Aircraft and aircraft parts sold under the Act shall be used only for wildfire suppression purposes and shall not be flown or removed from the U.S. unless dispatched by the National Interagency Fire Center in support of an international agreement to assist in wildfire suppression, or for other purposes jointly approved in advance, in writing, by the Secretary of Defense and the Secretary of Agriculture.

§ 171.4 Qualifications.

The Secretary of Agriculture must certify in writing to the Secretary of Defense prior to sale that the person or entity is capable of meeting the terms and conditions of a contract to deliver fire retardant by air.

(a) Prior to sales offerings of aircraft or aircraft parts, the U.S. Department of Agriculture (USDA) must provide to the Defense Reutilization and Marketing Service (DRMS), in writing, a list of persons or entities eligible to bid under this Act, including expiration date of each USDA contract, and locations covered by the USDA contract.

(b) This requirement may not be delegated to the U.S. Forest Service (USFS).

§ 171.5 Sale procedures.

Disposal of aircraft and aircraft parts must be in accordance with the provisions of Chapter 4 of DOD 4160.21–M, paragraph B2, and with other pertinent parts of this manual, with the following changes and additions:

(a) Sales shall be limited to the aircraft types listed in Attachment 1 of Chapter 4 of DOD 4160.21–M, and parts thereto (*i.e.,* no aircraft or aircraft parts listed as Munitions List Items on the State Department's U.S. Munitions List).

(b) Sales shall be made at fair market value (FMV), as determined by the Secretary of Defense and, to the extent practicable, on a competitive basis.

(1) DRMS must conduct sales utilizing FMVs that are either provided by the Military Services on the Disposal Turn-In Documents (DTIDs) or based on DRMS' professional expertise and knowledge of the market. Advice regarding FMV shall be provided to DRMS by USDA, as appropriate.

(2) If the high bid for a sale item does not equal or exceed the FMV, DRMS is vested with the discretion to reject all bids and reoffer the item:

(i) On another wildfire suppression sale if there is indication that reoffer may be successful, or,

(ii) With DLA concurrence, as normal surplus under the FPMR if there is no such indication.

(3) Disposition of proceeds from sale of aircraft under the Act will be as prescribed in guidance from the Under Secretary of Defense (Comptroller).

(c) Purchases shall certify that aircraft and aircraft parts will be used only in accordance with conditions stated in § 171.3.

(1) Sales solicitations will require bidders to submit end-use certificates with their bids, stating the intended use and proposed areas of operations.

(2) The completed end-use certificates shall be used in the bid evaluation process.

(d) Sales contracts shall include terms and conditions for verifying and enforcing the use of the aircraft and aircraft parts in accordance with provisions of this guidance.

(1) The DRMS Sales Contracting Officer (SCO) is responsible for verifying and enforcing the use of aircraft and aircraft parts in accordance with the terms and conditions of the sales contract.

(i) Sales contracts include provisions for on-site visits to the purchaser's place(s) of business and/or worksite(s).

(ii) Sales contracts require the purchaser to make available to the SCO, upon his or her request, all records concerning the use of aircraft and aircraft parts.

(2) USDA shall nominate in writing, and the SCO shall appoint, qualified Government employees (not contract employees) to serve as Contracting Officer's Representatives (CORs) for the purpose of conducting on-site verification and enforcement of the use of aircraft and aircraft parts for those purposes permitted by the sales contract.

(i) COR appointments must be in writing and must state the COR's duties, the limitations of the appointment, and the reporting requirements.

(ii) USDA bears all COR costs.

(iii) The SCO may reject any COR nominee for cause, or terminate any COR appointment for cause.

(3) Sales contracts require purchasers to comply with the Federal Aviation Agency (FAA) requirements in Chapter 4 of DOD 4160.21–M, paragraphs B 2 b (4)(d)2 through (40)(d)5.

(4) Sales contracts require purchasers to comply with the Flight Safety Critical Aircraft Parts regime in Chapter 4 of DOD 4160.21–M, paragraph B 26 c and d, and in Attachment 3 of Chapter 4 of DOD 4160.21–M.

(5) Sales contracts require purchasers to obtain the prior written consent of the SCO for resale of aircraft or aircraft parts purchased from DRMS under this Act. Resales are only permitted to other entities which, at time of resale, meet the qualifications required of initial purchasers. The SCO must seek, and USDA must provide, written assurance as to the acceptability of a prospective

repurchaser before approving resale. Resales will normally be approved for airtanker contracts which have completed their contracts, or which have had their contracts terminated, or which can provide other valid reasons for seeking resale which are acceptable to the SCO.

(i) If it is determined by the SCO that there is no interest in the aircraft or aircraft parts being offered for resale among entities deemed qualified repurchasers by USDA, the SCO may permit resale to entities outside the airtanker industry.

(ii) When an aircraft or aircraft parts are determined to be uneconomically repairable and suitable only for cannibalization and/or scrapping, the purchaser shall advise the SCO in writing and provide evidence in the form of a technical inspection document from a qualified FAA airframe and powerplant mechanic, or equivalent.

(iii) The policy outlined in paragraph (d)(5) of this section also applies to resales by repurchasers, and to all other manner of proposed title transfer (including, but no limited to, exchange and barters).

(iv) Sales of aircraft and aircraft parts under the Act are intended for principals only. Sales offerings will caution prospective purchasers not to buy with the expectation of acting as brokers, dealers, agents, or middlemen for other interested parties.

(6) The failure of a purchaser to comply with the sales contract terms and conditions may be cause for suspension and/or debarment, in addition to other administrative, contractual, civil, and criminal (including, but not limited to, 18 U.S.C. 1001) remedies which may be available to DOD.

(7) Aircraft parts will be made available in two ways:

(i) DRMS may, based on availability and demand, offer for sale under the Act whole unflyable aircraft, aircraft carcasses for cannibalization, or aircraft parts, utilizing substantially the same provisions outlined in paragraphs (a) through (d)(6) of this section for flyable aircraft.

(A) If USDA directs that DRMS set aside parts for sale under the Act, USDA must provide listings of parts required, by National Stock Number and Condition Code.

(B) Only qualified airtanker operators which fly the end-term aircraft will be allowed to purchase unflyable aircraft, aircraft carcasses, or aircraft parts applicable to that end-item.

(C) FMVs are not required for aircraft parts. DRMS must utilize historic prices received for similar parts in making sale determinations.

(ii) As an agency of the Federal Government, USDA remains eligible to receive no-cost transfers of excess DOD aircraft parts under the FPMR.

§ 171.6 Reutilization and transfer procedures.

Prior to any sales effort, the Secretary of Defense shall, to the maximum extent practicable, consult with the Administrator of GSA, and with the heads of other Federal departments and agencies as appropriate, regarding reutilization and transfer requirements for aircraft and aircraft parts under this Act (see Chapter 4 of DOD 4160.21–M, paragraphs B 2 b (1) through B 2 b (3)).

(a) DOD reutilization:

(1) USDA shall notify Army, Navy, and/or Air Force, in writing, of their aircraft requirements as they arise, by aircraft type listed in Attachment 1 of Chapter 4 of DOD 4160.21–M.

(2) If a DOD requirement exists, the owning Military Service shall advise USDA, in writing, that it will be issuing the aircraft to satisfy the DOD reutilization requirement. If USDA disputes the validity of the DOD requirement, it shall send a written notice of dispute to the owning Military Service and ADUSD(L&MR/SCI) within thirty (30) days of its notice from the Military Service. ADUSD(L&MR/SCI) shall then resolve the dispute, in writing. The aircraft may not be issued until the dispute has been resolved.

(f) Federal agency transfer:

(1) The Military Service must report aircraft which survive reutilization screening to GSA Region 9 on a Standard Form 120. GSA shall screen for Federal agency transfer requirements in accordance with the FPMR.

(2) If a Federal agency requirement exists, GSA shall advise USDA, in writing, that it will be issuing the aircraft to satisfy the Federal agency requirement. If USDA disputes the validity of the Federal requirement, it shall send a written notice of dispute to the owning Military Service and ADUSD(L&MR/SCI) within thirty (30) days of its notice from the Military Service. ADUSD(L&MR/SCI) shall then resolve the dispute, in writing. The aircraft cannot be issued until the dispute has been resolved.

(c) The Military Services shall:

(1) Report aircraft which survive transfer screening and are ready for sale to Headquarters, Defense Reutilization and Marketing Service, ATTN: DRMS–LMI, Federal Center, 74 Washington Avenue North, Battle Creek, Michigan 49017–3092. The Military Services must use a DD Form 1348–1A, DTID, for this purpose.

(2) Transfer excess DOD aircraft to the Aerospace Maintenance and Regeneration Center (AMARC), Davis-Monthan AFB, AZ, and place the aircraft in an ''excess'' storage category while aircraft are undergoing screening and/or wildfire suppression aircraft sale. Aircraft shall not be available nor offered to airtanker operators from the Military Service's airfield. The Military Service shall be responsible for the AMARC aircraft induction charges. The gaining customer will be liable for all AMARC withdrawal charges, to include any aircraft preparation required from AMARC. Sale of parts required for aircraft preparation is limited to those not required for the operational mission forces, and only if authorized by specific authority of the respective Military Service's weapon system program manager.

§ 171.7 Reporting requirements.

Not later than 31 March 2000, the Secretary of Defense must submit to the Committee on Armed Services of the Senate and the Committee on National Security of the House of Representatives a report setting forth the following:

(a) The number and type of aircraft sold under this authority, and the terms and conditions under which the aircraft were sold.

(b) The persons or entities to which the aircraft were sold.

(c) An accounting of the current use of the aircraft sold.

(d) USDA must submit to Headquarters, Defense Reutilization and Marketing Service, ATTN: DRMS–LMI, Federal Center, 74 Washington Avenue North, Battle Creek, Michigan, 49017–3092, not later than 1 February 2000, a report setting forth an accounting of the current disposition of all aircraft sold under the authority of the Act.

(e) DRMS must compile the report, based on sales contract files and (for the third report element) input from the USDA. The report must be provided to HQ DLA not later than 1 March 2000. HQ DLA shall forward the report to DOD not later than 15 March 2000.

§ 171.8 Expiration.

This part expires on 30 September 2005.

Dated: February 6, 2003.

Patricia L. Toppings,

Alternate OSD Federal Register Liaison Officer, Department of Defense.

[FR Doc. 03–4443 Filed 2–25–03; 8:45 am]

BILLING CODE 5001–08–M

DEPARTMENT OF DEFENSE

Office of the Secretary

32 CFR Part 285

[DOD Directive 5400.7]

RIN 0790–AG98

DOD Freedom of Information Act (FOIA) Program

AGENCY: Department of Defense.

ACTION: Final rule.

SUMMARY: This final rule reflects administrative changes as a result of DOD reorganization. The rule also provides guidance to DOD on implementation of the amended law.

EFFECTIVE DATE: June 17, 2002.

FOR FURTHER INFORMATION CONTACT: Mr. D. Maier, 703–697–1160.

SUPPLEMENTARY INFORMATION:

Executive Order 12866, ''Regulatory Planning and Review''

It has been determined that 32 CFR part 285 is not a significant regulatory action. The rule does not:

(1) Have an annual effect on the economy of $100 million or more or adversely affect in a material way the economy, a sector of the economy, productivity, competition, jobs, the environment, public health or safety, or State, local, or tribal governments or communities;

(2) Create a serious inconsistency or otherwise interfere with an action taken or planned by another agency;

(3) Materially alter the budgetary impact of entitlements, grants, user fees, or loan programs, or the rights and obligations of the recipients thereof; or

(4) Raise novel legacy or policy issues arising out of legal mandates, the President's priorities, or the principles set forth in this Executive Order.

Unfunded Mandates Reform Act (Sec. 202, Pub. L. 104–4)

It has been certified that 32 CFR part 285 does not contain a Federal Mandate that may result in the expenditure by State, local and tribal governments, in the aggregate, or by the private sector, of $100 million or more in any one year.

Public Law 96–354, ''Regulatory Flexibility Act'' (5 U.S.C. 601)

It has been determined that this rule is not subject to the Regulatory Flexibility Act (5 U.S.C. 601) because it would not, if promulgated, have a significant economic impact on a substantial number of small entities. This rule implements the Freedom of Information Act (5 U.S.C. 552), a statute concerning the release of Federal Government records, and does not economically impact Federal Government relations with the private sector.

Public Law 96–511, ''Paperwork Reduction Act'' (44 U.S.C. Chapter 35)

It has been certified that 32 CFR part 285 does not impose any reporting or recordkeeping requirements under the Paperwork Reduction Act of 1995 (44 U.S.C. Chapter 44)

Federalism (Executive Order 13132)

It has been certified that 32 CFR part 285 does not have federalism implications, as set forth in Executive Order 13132. This rule does not have substantial direct effects on:

(1) The States;

(2) The relationship between the National Government and the States; or

(3) The distribution of power and responsibilities among the various levels of government.

List of Subjects in 32 CFR Part 285

Freedom of information.

Accordingly, 32 CFR part 285 is amended to read as follows:

PART 285—DOD FREEDOM OF INFORMATION ACT (FOIA) PROGRAM

1. The authority citation for 32 CFR part 285 continues to read as follows:

Authority: 5 U.S.C. 552.

2. Section 285.1 is revised to read as follows:

§ 285.1 Reissuance and purpose.

This part:

(a) Reissues 32 CFR part 285 to update policies and responsibilities for the implementation of the DOD FOIA Program under 5 U.S.C. 552.

(b) Continues to authorize, consistent with 5 U.S.C. 552, the publication of 32 CFR part 286, the single DOD Regulation on the FOIA Program.

(c) Continues to delegate authorities and responsibilities for the effective administration of the FOIA Program.

3. Section 285.3 is amended by revising paragraph (e) to read as follows:

§ 285.3 Policy.

* * * * *

(e) Release Agency records to the public unless those records are exempt from mandatory disclosure as outlined in 5 U.S.C. 552.

* * * * *

4. Section 285.4 is amended by revising paragraph (a), removing paragraph (a)(4), redesignating paragraphs (b) and (c) as paragraphs (c) and (d), adding a new paragraph (b), and revising newly redesignated (d)(1) as follows:

§ 285.4 Responsibilities.

(a) The Director, Washington Headquarters Service shall:

(1) * * *

(2) * * *

(3) * * *

(b) The Director, Administration and Management shall, as the designee of the Secretary of Defense, serve as the sole appellate authority for appeals to decisions of respective Initial Denial Authorities within OSD, the Chairman of the Joint Chiefs of Staff, the Combatant Commands, and the DOD Field Activities.

* * * * *

(d) The Heads of the DOD Components shall:

(1) Publish in the **Federal Register** any instructions necessary for the internal administration of this part within a DOD Component that are not prescribed by this part or by other issuances of the Director, Washington Headquarters Services. For the guidance of the public, the information specified in 5 U.S.C. 552(a)(1) shall be published in accordance with DOD Directive 5025.1.

* * * * *

5. Section 285.5 is revised to read as follows:

§ 285.5 Information requirements.

The reporting requirements in subpart G of 32 CFR part 286 have been assigned Report Control Symbol DD–DA&M(a) 1365.

Dated: February 6, 2003.

Patricia L. Toppings,

Alternate OSD Federal Register Liaison Officer, Department of Defense.

[FR Doc. 03–4442 Filed 2–25–03; 8:45 am]

BILLING CODE 5001–08–M

AMERICAN BATTLE MONUMENTS COMMISSION

36 CFR Part 404

Revision of the Freedom of Information Act Regulations and Implementation of the Electronic Freedom of Information Act Amendments of 1996

AGENCY: American Battle Monuments Commission.

ACTION: Final rule.

SUMMARY: The American Battle Monuments Commission is revising its regulations for responding to public requests for access to records or information under the Freedom of

Information Act (FOIA). These regulations update and amplify the Commission's current regulations.

DATES: Effective February 26, 2003.

FOR FURTHER INFORMATION CONTACT: Mr. Thomas R. Sole, Freedom of Information Officer, American Battle Monuments Commission or Ms. Martha Sell, Freedom of Information Act Representative, Courthouse Plaza II, Suite 500, 2300 Clarendon Blvd., Arlington, VA 22202 or by telephone at 703–696–6897.

SUPPLEMENTARY INFORMATION: This rule replaces 36 CFR Parts 404 and 405. It updates Commission addresses, organizational information, and fee schedule and explicitly incorporates electronic format information as within the scope of covered information consistent with the Electronic Freedom of Information Act of 1996 (Pub. L. 104–231).

List of Subjects in 36 CFR Part 404

Freedom of information.

For the reasons stated in the preamble, the American Battle Monuments Commission amends Chapter IV of title 36 of the Code of Federal Regulations as follows:

1. Part 404 is revised to read as follows:

PART 404—PROCEDURES AND GUIDELINES FOR COMPLIANCE WITH THE FREEDOM OF INFORMATION ACT

Sec.
404.1 General.
404.2 Authority and functions.
404.3 Organization.
404.4 Access to information.
404.5 Inspection and copying.
404.6 Definitions.
404.7 Fees to be charged—general.
404.8 Fees to be charged—categories of requesters.
404.9 Miscellaneous fee provisions.
404.10 Waiver or reduction of charges.

Authority: 5 U.S.C. 552.

§ 404.1 General.

This information is furnished for the guidance of the public and in compliance with the requirements of section 552 of Title 5, United States Code, as amended.

§ 404.2 Authority and functions.

The general functions of the American Battle Monuments Commission, as provided by statute, 36 U.S.C. Section 2101, *et seq.,* are to build and maintain suitable memorials commemorating the service of American Armed Forces and to maintain permanent American military cemeteries in foreign countries.

§ 404.3 Organization.

(a) The brief description of the central organization of the American Battle Monuments Commission follows:

(1) The Commission is composed of not more than 11 members appointed by the President.

(2) The day to day operation of the Commission is under the direction of a Secretary appointed by the President.

(3) Principal Officials include the Executive Director, Director of Finance, Director of Procurement and Contracting, Director of Engineering, Maintenance, and Operations and Director of Personnel and Administration.

(4) The Commission also creates temporary offices when tasked with major additional responsibilities not of a permanent nature.

(b) Locations. (1)The principal offices of the American Battle Monuments Commission are located at Courthouse Plaza II, Suite 500, 2300 Clarendon Boulevard, Arlington, VA 22201. Persons desiring to visit offices or employees of the American Battle Monuments Commission should write or telephone ahead (703–696–6897 or 703–696–6895) to make an appointment.

(2) Field offices are located in Paris, France; Rome, Italy; Manila, Republic of the Philippines; the Republic of Panama; and Mexico City, Mexico.

§ 404.4 Access to information.

(a) The American Battle Monuments Commission makes available information pertaining to Commission matters within the scope of 5 U.S.C. 552(a)(2) by publishing them electronically at the ABMC home page at *http://www.abmc.gov.*

(b) The ABMC FOIA Officer is responsible for acting on all initial requests. Individuals wishing to file a request under the Freedom of Information Act (FOIA) should address their request in writing to the FOIA Officer, American Battle Monuments Commission, Courthouse Plaza II, Suite 500, 2300 Clarendon Boulevard, Arlington, VA 22201 (telephone 703–696–6897 or 703–696–6895). Requests for information shall be as specific as possible.

(c) Upon receipt of any request for information or records, the FOIA Officer will determine within 20 days (excepting Saturdays, Sundays and legal public holidays) after the receipt of such request whether it is appropriate to grant the request and will immediately provide written notification to the person making the request. If the request is denied, the written notification to the person making the request shall include the names of the individuals who participated in the determination, the reasons for the denial, and a notice that an appeal may be lodged within the American Battle Monuments Commission. (Receipt of a request as used herein means the date the request is received in the office of the FOIA Officer.)

(d) Expedited processing. (1) Requests and appeals will be taken out of order and given expedited treatment whenever it is determined that they involve:

(i) Circumstances in which the lack of expedited treatment could reasonably be expected to pose an imminent threat to the life or physical safety of an individual;

(ii) An urgency to inform the public about an actual or alleged federal government activity, if made by a person primarily engaged in disseminating information;

(iii) The loss of substantial due process rights; or

(iv) A matter of widespread and exceptional media interest in which there exist possible questions about the government's integrity which effect public confidence.

(2) A request for expedited processing may be made at the time of the initial request for records or at any later time.

(3) A requester who seeks expedited processing must submit a statement, certified to be true and correct to the best of that person's knowledge and belief, explaining in detail the basis for requesting expedited processing. For example, a requester within the category described in paragraph (d)(1)(ii) of this section, if not a full-time member of the news media, must establish that he or she is a person whose main professional activity or occupation is information dissemination, though it need not be his or her sole occupation. A requester within the category (d)(1)(ii) of this section also must establish a particular urgency to inform the public about the government activity involved in the request, beyond the public's right to know about government activity generally. The formality of certification may be waived as a matter of administrative discretion.

(4) Within 10 days of its receipt of a request for expedited processing, ABMC will decide whether to grant it and will notify the requester of the decision. If a request for expedited treatment is granted, the request will be given priority and will be processed as soon as practicable. If a request for expedited processing is denied, any appeal of that decision will be acted on expeditiously.

(e) Appeals shall be set forth in writing within 30 days of receipt of a

denial and addressed to the FOIA Officer at the address specified in paragraph (b) of this section. The appeal shall include a statement explaining the basis for the appeal. Determinations of appeals will be set forth in writing and signed by the Executive Director, or his designee, within 20 days (excepting Saturdays, Sundays, and legal public holidays). If, on appeal, the denial is in whole or in part upheld, the written determination will also contain a notification of the provisions for judicial review and the names of the persons who participated in the determination.

(f) In unusual circumstances, the time limits prescribed in paragraphs (c) and (e) of this section may be extended for not more than 10 days (excepting Saturdays, Sundays, or legal public holidays). Extensions may be granted by the FOIA Officer. The extension period may be split between the initial request and the appeal but in no instance may the total period exceed 10 working days. Extensions will be by written notice to the persons making the request and will set forth the reasons for the extension and the date the determination is expected.

(g) With respect to a request for which a written notice under paragraph (f) of this section extends the time limits prescribed under paragraph (c) of this section, the agency shall notify the person making the request if the request cannot be processed within the time limit specified in paragraph (f) of this section and shall provide the person an opportunity to limit the scope of the request so that it may be processed within that time limit or an opportunity to arrange with the agency an alternative time frame for processing the request or a modified request. Refusal by the person to reasonably modify the request or arrange such an alternative time frame shall be considered as a factor in determining whether exceptional circumstances exist for purposes of 5 U.S.C. 552(a)(6)(C). When ABMC reasonably believes that a requester, or a group of requestors acting in concert, has submitted requests that constitute a single request, involving clearly related matters, ABMC may aggregate those requests for purposes of this paragraph. One element to be considered in determining whether a belief would be reasonable is the time period over which the requests have occurred.

(h) As used herein, but only to the extent reasonably necessary to the proper processing of the particular request, the term unusual circumstances means:

(1) The need to search for and collect the requested records from establishments that are separated from the office processing the request;

(2) The need to search for, collect, and appropriately examine a voluminous amount of separate and distinct records which are demanded in a single request; or

(3) The need for consultation, which shall be conducted with all practicable speed, with another agency having a substantial interest in the determination of the request or among two or more components of the agency which have a substantial subject matter interest therein.

§ 404.5 Inspection and copying.

When a request for information has been approved pursuant to § 404.4, the person making the request may make an appointment to inspect or copy the materials requested during regular business hours by writing or telephoning the FOIA Officer at the address or telephone number listed in § 404.4(b). Such materials may be copied and reasonable facilities will be made available for that purpose. Copies of individual pages of such materials will be made available at the price per page specified in § 404.7(d); however, the right is reserved to limit to a reasonable quantity the copies of such materials which may be made available in this manner when copies also are offered for sale by the Superintendent of Documents.

§ 404.6 Definitions.

For the purpose of these regulations:

(a) All the terms defined in the Freedom of Information Act apply.

(b) A *statute specifically providing for setting the level of fees for particular types of records* (5 U.S.C. 552(a)(4)(A)(vi)) means any statute that specifically requires a government agency, such as the Government Printing Office (GPO) or the National Technical Information Service (NTIS), to set the level of fees for particular types of records, in order to:

(1) Serve both the general public and private sector organizations by conveniently making available government information;

(2) Ensure that groups and individuals pay the cost of publications and other services that are for their special use so that these costs are not borne by the general taxpaying public;

(3) Operate an information dissemination activity on a self-sustaining basis to the maximum extent possible; or

(4) Return revenue to the Treasury for defraying, wholly or in part, appropriated funds used to pay the cost of disseminating government information. Statutes, such as the User Fee Statute, which only provide a general discussion of fees without explicitly requiring that an agency set and collect fees for particular documents do not supersede the Freedom of Information Act under section (a)(4)(A)(vi) of that statute.

(c) The term *direct costs* means those expenditures that ABMC actually incurs in searching for and duplicating (and in the case of commercial requesters, reviewing) documents to respond to a FOIA request. Direct costs include, for example, the salary of the employee performing work (the basic rate of pay for the employee plus 16 percent of that rate to cover benefits) and the cost of operating duplicating machinery. Not included in direct costs are overhead expenses such as costs of space, and heating or lighting the facility in which the records are stored.

(d) The term *search* means the process of looking for and retrieving records or information responsive to a request. It includes page-by-page or line-by-line identification of information within records and also includes reasonable efforts to locate and retrieve information from records maintained in electronic form or format. ABMC employees should ensure that searching for material is done in the most efficient and least expensive manner so as to minimize costs for both the agency and the requester. For example, employees should not engage in line-by-line search when merely duplicating an entire document would prove the less expensive and quicker method of complying with a request. Search should be distinguished, moreover, from review of material in order to determine whether the material is exempt from disclosure (see paragraph (f) of this section).

(e) The term *duplication* means the making of a copy of a document, or of the information contained in it, necessary to respond to a FOIA request. Such copies can take the form of paper, microform, audio-visual materials, or electronic records (*e.g.*, magnetic tape or disk), among others. The requester's specified preference of form or format of disclosure will be honored if the record is readily reproducible in that format.

(f) The term *review* refers to the process of examining documents located in response to a request that is for a commercial use (*see* paragraph (g) of this section) to determine whether any portion of any document located is permitted to be withheld. It also includes processing any documents for disclosure, *e.g.*, doing all that is necessary to excise them and otherwise prepare them for release. Review does

not include time spent resolving general legal or policy issues regarding the application of exemptions.

(g) The term *commercial use request* refers to a request from or on behalf of one who seeks information for a use or purpose that furthers the commercial, trade, or profit interests of the requester or the person on whose behalf the request is made. In determining whether a requester properly belongs in this category, ABMC must determine the use to which a requester will put the documents requested. Moreover, where an ABMC employee has reasonable cause to doubt the use to which a requester will put the records sought, or where that use is not clear from the request itself, the employee should seek additional clarification before assigning the request to a specific category.

(h) The term *educational institution* refers to a preschool, a public or private elementary or secondary school, an institution of graduate higher education, an institution of undergraduate higher education, an institution of professional education, or an institution of vocational education, that operates a program or programs of scholarly research.

(i) The term *non-commercial scientific institution* refers to an institution that is not operated on a commercial basis (as that term is referenced in paragraph (g) of this section), and that is operated solely for the purpose of conducting scientific research the results of which are not intended to promote any particular product or industry.

(j) The term *representative of the news media* refers to any person actively gathering news for an entity that is organized and operated to publish or broadcast news to the public. The term news means information that is about current events or that would be of current interest to the public. Examples of news media entities include television or radio stations broadcasting to the public at large, and publishers of periodicals (but only in those instances when they can qualify as disseminators of news) who make their products available for purchase or subscription by the general public. These examples are not intended to be all-inclusive. Moreover, as traditional methods of news delivery evolve (*e.g.*, electronic dissemination of newspapers through telecommunications services), such alternative media would be included in this category. In the case of freelance journalists, they may be regarded as working for a news organization if they can demonstrate a solid basis for expecting publication through that organization, even though not actually employed by it. A publication contract would be the clearest proof, but ABMC may also look to the past publication record of a requester in making this determination.

§ 404.7 Fees to be charged—general.

ABMC shall charge fees that recoup the full allowable direct costs it incurs. Moreover, it shall use the most efficient and least costly methods to comply with requests for documents made under the FOIA. When documents that would be responsive to a request are maintained for distribution by agencies operating statutory-based fee schedule programs (see definition in § 404.6(b)), such as the NTIS, ABMC should inform requesters of the steps necessary to obtain records from those sources.

(a) *Manual searches for records.* ABMC will charge at the salary rate(s) (*i.e.*, basic pay plus 16 percent) of the employee(s) making the search.

(b) *Computer searches for records.* ABMC will charge at the actual direct cost of providing the service. This will include the cost of operating the central processing unit (CPU) for that portion of operating time that is directly attributable to searching for records responsive to a FOIA request and operator/programmer salary apportionable to the search.

(c) *Review of records.* Only requesters who are seeking documents for commercial use may be charged for time spent reviewing records to determine whether they are exempt from mandatory disclosure. Charges may be assessed only for the initial review; *i.e.*, the review undertaken the first time ABMC analyzes the applicability of a specific exemption to a particular record or portion of a record. Records or portions of records withheld in full under an exemption that is subsequently determined not to apply may be reviewed again to determine the applicability of other exemptions not previously considered. The costs for such a subsequent review is assessable.

(d) *Duplication of records.* Records will be duplicated at a rate of $.15 per page. For copies prepared by computer, such as tapes or printouts, ABMC shall charge the actual cost, including operator time, of production of the tape or printout. For other methods of reproduction or duplication, ABMC will charge the actual direct costs of producing the document(s). If ABMC estimates that duplication charges are likely to exceed $25, it shall notify the requester of the estimated amount of fees, unless the requester has indicated in advance his willingness to pay fees as high as those anticipated. Such a notice shall offer a requester the opportunity to confer with agency personnel with the object of reformulating the request to meet his or her needs at a lower cost.

(e) *Other charges.* When it elects to charge them, ABMC will recover the full costs of providing services such as:

(1) Certifying that records are true copies;

(2) Sending records by special methods such as express mail.

(3) Eight by ten inch black and white photographs—$3.75

(4) Eight by ten inch color photographs—$5.00

(5) $1.50 per publication

(6) Video Purchase: The Price of Freedom—$13.00

(f) Remittances shall be in the form either of a personal check or bank draft drawn on a bank in the United States, or a postal money order. Remittances shall be made payable to the order of the Treasury of the United States and mailed to the FOIA Officer, American Battle Monuments Commission, Courthouse Plaza II, Suite 500, 2300 Clarendon Blvd., Arlington, Virginia 22201

(g) *A receipt for fees paid will be given upon request.* Refund of fees paid for services actually rendered will not be made.

(h) *Restrictions on assessing fees.* With the exception of requesters seeking documents for a commercial use, ABMC will provide the first 100 pages of duplication and the first 2 hours of search time without charge. Moreover, ABMC will not charge fees to any requester, including commercial use requesters, if the cost of collecting a fee would be equal to or greater than the fee itself.

(1) The elements to be considered in determining the cost of collecting a fee are the administrative costs of receiving and recording a requester's remittance, and processing the fee for deposit in the Treasury Department's special account.

(2) For purposes of these restrictions on assessment of fees, the word *pages* refers to paper copies of 8½ × 11 or 11 x 14. Thus, requesters are not entitled to 100 microfiche or 100 computer disks, for example. A microfiche containing the equivalent of 100 pages or 100 pages of computer printout, does meet the terms of the restriction.

(3) Similarly, the term *search time* in this context has as its basis, manual search. To apply this term to searches made by computer, ABMC will determine the hourly cost of operating the central processing unit and the operator's hourly salary plus 16 percent. When the cost of search (including the operator time and the cost of operating the computer to process a request) equals the equivalent dollar amount of

two hours of the salary of the person performing the search, *i.e.*, the operator, ABMC will begin assessing charges for computer search.

§ 404.8 Fees to be charged—categories of requesters.

There are four categories of FOIA requesters: commercial use requesters; educational and noncommercial scientific institutions; representatives of the news media; and all other requesters. The specific levels of fees for each of these categories:

(a) *Commercial use requesters.* When ABMC receives a request for documents for commercial use, it will assess charges that recover the full direct costs of searching for, reviewing for release, and duplicating the record sought. Requesters must reasonably describe the records sought. Commercial use requesters are not entitled to 2 hours of free search time nor 100 free pages of reproduction of documents. ABMC may recover the cost of searching for and reviewing records even if there is ultimately no disclosure of records (*see* paragraph (b) of this section).

(b) *Educational and noncommercial scientific institution requesters.* ABMC shall provide documents to requesters in this category for the cost of reproduction alone, excluding charges for the first 100 pages. To be eligible for inclusion in this category, requesters must show that the request is being made as authorized by and under the auspices of a qualifying institution and that the records are not sought for a commercial use, but are sought in furtherance of scholarly (if the request is from an educational institution) or scientific (if the request is from a non-commercial scientific institution) research. Requesters must reasonably describe the records sought.

(c) *Requesters who are representatives of the news media.* ABMC shall provide documents to requesters in this category when serving the news dissemination function for the cost of reproduction alone, excluding charges for the first 100 pages. To be eligible for inclusion in this category, a requester must meet the criteria in § 404.4(j), and his or her request must not be made for a commercial use. In reference to this class of requester, a request for records supporting the news dissemination function of the requester shall not be considered to be a request that is for a commercial use. Requesters must reasonably describe the records sought.

(d) *All other requesters.* ABMC shall charge requesters who do not fit into any of the categories above fees that recover the full reasonable direct cost of searching for and reproducing records that are responsive to the request, except that the first 100 pages of reproduction and the first 2 hours of search time shall be furnished without charge. Moreover, requests for records about the requesters filed in ABMC's systems of records will continue to be treated under the fee provisions of the Privacy Act of 1974 which permit fees only for reproduction. Requesters must reasonably describe the records sought.

§ 404.9 Miscellaneous fee provisions.

(a) *Charging interest—notice and rate.* ABMC may begin assessing interest charges on an unpaid bill starting on the 31st day following the day on which the billing was sent. The fact that the fee has been received by ABMC within the 30-day grace period, even if not processed, will suffice to stay the accrual of interest. Interest will be at the rate prescribed in section 3717 of Title 31 of the United States Code and will accrue from the date of the billing.

(b) *Charges for unsuccessful search.* ABMC may assess charges for time spent searching, even if it fails to locate the records or if records located are determined to be exempt from disclosure. If ABMC estimates that search charges are likely to exceed $25, it shall notify the requester of the estimated amount of fees, unless the requester has indicated in advance his willingness to pay fees as high as those anticipated. Such a notice shall offer the requester the opportunity to confer with agency personnel with the object of reformulating the request to meet his or her needs at a lower cost.

(c) *Aggregating requests.* A requester may not file multiple requests at the same time, each seeking portions of a document or documents, solely in order to avoid payment of fees. When ABMC reasonably believes that a requester, or a group of requestors acting in concert, has submitted requests that constitute a single request, involving clearly related matters, ABMC may aggregate those requests and charge accordingly. One element to be considered in determining whether a belief would be reasonable is the time period over which the requests have occurred.

(d) *Advance payments.* ABMC may not require a requester to make an advance payment, *i.e.,* payment before work is commenced or continued on a request, unless:

(1) ABMC estimates or determines that allowable charges that a requester may be required to pay are likely to exceed $250. Then, ABMC will notify the requester of the likely cost and obtain satisfactory assurance of full payment where the requester has a history of prompt payment of FOIA fees, or require an advance payment of an amount up to the full estimated charges in the case of requesters with no history of payment; or

(2) A requester has previously failed to pay a fee charged in a timely fashion (*i.e.,* within 30 days of the date of the billing). Then, ABMC may require the requester to pay the full amount owed plus any applicable interest as provided above or demonstrate that he or she has, in fact, paid the fee, and to make an advance payment of the full amount of the estimated fee before the agency begins to process a new request or a pending request from that requester.

(3) When ABMC acts under paragraph (d)(1) or (2) of this section, the administrative time limits prescribed in the FOIA, 5 U.S.C. 552(a)(6) (*i.e.,* 20 working days from receipt of initial requests and 20 working days from receipt of appeals from initial denial, plus permissible extensions of these time limits), will begin only after ABMC has received fee payments described in paragraphs (d)(1) and (2) of this section. Effect of the Debt Collection Act of 1982 (Pub. L. 97–365). ABMC should comply with provisions of the Debt Collection Act, including disclosure to consumer reporting agencies and use of collection agencies, where appropriate, to encourage repayment.

§ 404.10 Waiver or reduction of charges.

Fees otherwise chargeable in connection with a request for disclosure of a record shall be waived or reduced where it is determined that disclosure is in the public interest because it is likely to contribute significantly to public understanding of the operations or activities of the Government and is not primarily in the commercial interest of the requester.

PART 405—[REMOVED]

2. Under authority of U.S.C. 552, part 405 is removed.

Dated: February 12, 2003.

Theodore Gloukhoff,

Director, Personnel and Administration.

[FR Doc. 03–4080 Filed 2–25–03; 8:45 am]

BILLING CODE 6120–01–P

ENVIRONMENTAL PROTECTION AGENCY

40 CFR Part 52

[CA255–0385; FRL–7448–1]

Revisions to the California State Implementation Plan, San Joaquin Valley Unified Air Pollution Control District

AGENCY: Environmental Protection Agency (EPA).

ACTION: Final rule.

SUMMARY: EPA is finalizing both a conditional approval and a limited approval and limited disapproval of revisions to the San Joaquin Valley Unified Air Pollution Control District's (SJVUAPCD) portion of the California State Implementation Plan (SIP). This action was proposed in the **Federal Register** on April 1, 2002, and concerns fugitive dust and particulate matter less than 10 microns in diameter (PM–10). The conditional approval is with respect to enforceability and reasonably available control measures (RACM), and the limited approval and limited disapproval is with respect to best available control measures (BACM). Under authority of the Clean Air Act as amended in 1990 (CAA or the Act), this action simultaneously approves local rules that regulate these emissions and directs California to correct rule deficiencies.

EFFECTIVE DATE: This rule is effective on March 28, 2003.

ADDRESSES: You can inspect copies of the administrative record for this action at EPA's Region IX office during normal business hours. You can inspect copies of the submitted SIP revisions at the following locations:

Environmental Protection Agency, Region IX, 75 Hawthorne Street, San Francisco, CA 94105–3901.

Air and Radiation Docket and Information Center, U.S. Environmental Protection Agency, Room B–102, 1301 Constitution Avenue, NW., (Mail Code 6102T), Washington, DC 20460.

California Air Resources Board, Stationary Source Division, Rule Evaluation Section, 1001 ''I'' Street, Sacramento, CA 95814.

San Joaquin Valley Unified Air Pollution Control District, 1990 East Gettysburg, Fresno, CA 93726.

A copy of the rules may also be available via the Internet at *http://www.arb.ca.gov/drdb/drdbltxt.htm.* Please be advised that this is not an EPA Web site and may not contain the same version of the rules that were submitted to EPA.

FOR FURTHER INFORMATION CONTACT: Karen Irwin, EPA Region IX, (415) 947–4116.

SUPPLEMENTARY INFORMATION: Throughout this document, ''we,'' ''us'' and ''our'' refer to EPA.

I. Proposed Action

On April 1, 2002 (67 FR 15345), EPA proposed a limited approval and limited disapproval of the following SJVUAPCD rules that were adopted on November 15, 2001 and submitted for incorporation into the California SIP on December 6, 2001.

Rule #	Rule title
8011	General Requirements.
8021	Construction, Demolition, Excavation, Extraction and Other Earthmoving Activities.
8031	Bulk Materials.
8041	Carryout and Trackout.
8051	Open Areas.
8061	Paved and Unpaved Roads.
8071	Unpaved Vehicle/Equipment Traffic Areas.
8081	Agricultural Sources.

These rules are part of SJVUAPCD's Regulation VIII. We proposed a limited approval of these rules because we determined that they improve the SIP and are largely consistent with the relevant CAA requirements. We simultaneously proposed a limited disapproval because we found that the submittal does not adequately fulfill the CAA section 189(b) requirement for a BACM demonstration, nor include any upgrades or revisions to the control measures that are required as a result of the BACM demonstration. Specifically, the State has not demonstrated that thresholds of source coverage within the rules (*e.g.*, minimum size of sources subject to rule requirements) fulfill BACM. Such thresholds include: (1) Rule 8061 and 8081 unpaved road trip count thresholds; (2) Rule 8071 and 8081 unpaved vehicle/equipment traffic area trip count thresholds; (3) Rule 8071 and 8081 unpaved vehicle/equipment traffic area size threshold; (4) Rule 8081 unpaved road and unpaved vehicle/equipment traffic area exclusion of implements of husbandry in the trip count; (5) Rule 8051 disturbed open areas threshold; (6) Rule 8041 threshold for when trackout control devices must be employed; (7) Rule 8041 trackout cleanup requirements as they apply to rural areas; (8) Rule 8031 and 8081 bulk materials thresholds; (9) Rule 8021 Dust Control Plan requirement thresholds; and (10) other control measures for paved road PM–10 emissions including preventing/mitigating trackout attributed to agricultural sources, stabilizing unpaved shoulders, frequent street sweeping and use of PM–10 efficient street sweepers.

We also proposed a conditional approval of all the submitted rules listed above except for Rule 8051. We proposed the conditional approval because we believe that the submittal resolves the prior enforceability and RACM deficiencies identified in the March 8, 2000 final action, subject to one condition. The condition is for SJVUAPCD to adequately demonstrate that it has applied RACM to the significant source categories that are subject to Regulation VIII. By letter dated March 5, 2002, SJVUAPCD committed to adopt and submit this demonstration within one year of EPA's publication of this final rule. This demonstration includes the following: (1) A complete list of candidate RACM for the following Regulation VIII significant sources: unpaved roads, unpaved vehicle/equipment traffic areas, paved roads and earthmoving sources, including bulk materials storage/handling; (2) a reasoned justification for any candidate measures that the District did not adopt for these sources, including descriptions of measures for these source categories that the District is implementing outside the context of Regulation VIII; and (3) information that supports the reasonableness of the Regulation VIII coverage.

Our proposed action contains more information on the basis for this rulemaking and on our evaluation of the submittal.

II. Public Comments and EPA Responses

EPA's proposed action provided a 60-day public comment period. During this period, we received comments from the following parties.

1. Brent J. Newell, Center on Race, Poverty & Environment, on behalf of the Association of Irritated Residents and El Comite para el Bienestar de Earlimart, letters dated May 30, 2002.
2. Anne C. Harper, Earthjustice, on behalf of the Sierra Club, letter dated May 31, 2002.

The comments and EPA responses are summarized below.

Comment 1: The version of Regulation VIII adopted by SJVUAPCD was inappropriately negotiated between EPA and the regulated industry weeks after the local public comment period expired. It does not fulfill the relevant public process requirements as significant changes were made at the

last minute. These changes include exempting implements of husbandry from vehicle trip counts in Rule 8011, increasing the size of exempted open areas by 300 percent in Rule 8051, and rendering the 20% VE standard useless by allowing the U.S. Department of Agriculture (USDA) to approve Fugitive PM–10 Management Plans (FPMPs) in Rules 8061, 8071 and 8081. Even SJVUAPCD's own staff did not have an opportunity to review the version presented to SJVUAPCD's Governing Board on November 15.

Response 1: 40 CFR part 51 Appendix V and 40 CFR 50.102 describe the public participation procedural requirements for adoption and submittal of SIP revisions. Paragraph (a)(1) of Section 50.102 requires that a State must conduct one or more public hearings prior to adoption and submission to EPA of any SIP revision such as Regulation VIII. Paragraphs 2(e) and (g) of part 51 Appendix V direct states to follow all relevant state requirements for public notice, hearing and adoption. California's Health and Safety Code (HSC) §§ 40725–30 outlines the procedures to be followed by local air districts, such as SJVUAPCD, in adopting, amending, or repealing any rule or regulation, including SIP revisions. EPA believes that these State rules are consistent with Administrative Procedures Act (APA) requirements for public participation, 5 U.S.C.A. 553.

In regard to changes made to a SIP revision after the end of the public comment period, HSC § 40726 allows for such changes without further public notice or comment as long as those changes are not ''so substantial as to significantly effect the meaning of the proposed rule or regulation.'' SJVUAPCD held a public hearing on Regulation VIII on October 31, 2001, received comments on the proposed rules, and responded to those comments. Both SJVUAPCD and CARB have determined that the public participation process followed by SJVUAPCD in adopting and submitting Regulation VIII fulfilled State and federal public participation requirements. EPA routinely relies upon determinations by State and local agencies as to compliance with their own public participation processes. Additionally, the final Regulation VIII (including the three provisions specifically noted in the comment) as adopted and submitted was not ''substantially'' different from the proposed regulation and was a logical outgrowth of the earlier proposed regulation. SJVUAPCD had received comments earlier in the public comment process that logically lead to the final version adopted. The District included in its submittal extensive comments received from many parties, including the regulated community, that related to the later revised Regulation VIII provisions.

The commenters also appear concerned that the District considered comments provided by EPA in adopting the final Regulation VIII. However, state and local agencies are allowed and encouraged to consider EPA comments in adopting final SIP rules or revisions as long as all other public participation requirements are met.

Comment 2: Rule revisions proposed to Rule 8081 on the day of the hearing but not adopted were not subject to the relevant public process requirements. These include a small farm exemption and an exemption for unpaved haul roads on days when no truck trips will occur.

Response 2: Revisions not adopted are not the subject of EPA's proposed action.

Comment 3: The exemption for ''implements of husbandry'' from vehicle trip counts violates CAA § 189(a) RACM requirements because it effectively excludes an unknown but large number of agricultural road segments from Regulation VIII without any analysis of the number of exempted road segments or the efficacy of the measure. EPA's proposed conditional approval is not supported by a factual basis.

Response 3: We agree that the State has not submitted detailed analysis of the impacts of the exemption for implements of husbandry. This does not mean that the exemption necessarily violates CAA § 189(a). Rather, it means that the State needs to perform and submit such analysis in order to determine whether the exemption and the rules fulfill § 189(a). We concur with the comment's implication that this analysis is important and, as a result, have required it as part of our final conditional approval.

Comment 4: The FPMP provisions in Rule 8081 allow exceedence of the general 20% opacity standard and violate § 189(a) because they are not federally enforceable. Responsibility for enforcement of the FPMP requirements is given to the USDA instead of to EPA and SJVUAPCD, in conflict with CAA § 110 enforceability requirements.

Response 4: Paragraph 7.0 of Rule 8081 states that FPMPs must be approved by the USDA *and* must be designed to achieve 50% control efficiency. We believe Rule 8081 is adequately enforceable because it establishes criteria for evaluation of FPMPs (*i.e.*, 50% control). This would allow SJVUAPCD and EPA to invalidate FPMPs that are not meeting 50% control, regardless of USDA's action. Also, as made clear by paragraph 7.4, the terms of the final FPMP approved by USDA are subject to enforcement by SJVUAPCD, EPA and citizens.

Comment 5: The exemption of all on-field sources, including smaller farms less than 320 acres and animal feed handling, which effectively exempts concentrated animal feeding operations, violates § 189(a). Farming operations account for nearly 25% of all PM–10 emissions in the Valley. The exemption does not constitute an appropriate interpretation of a ''more likely than not'' finding that the RACM requirement has been met.

Response 5: As discussed in our April 1, 2002 proposed action (67 FR 15345), EPA only evaluated these rules with respect to those sources that the rules purport to regulate. This is documented in the August 31, 1999 TSD associated with EPA's original proposed action (pg. 10). For example, Rule 8060, dated April 25, 1996, proposed to regulate unpaved roads for RACM purposes, so we evaluated whether the rule is sufficient for unpaved roads, including agricultural unpaved roads. Since Regulation VIII submittals have never purported to cover on-field agricultural activity, however, we have not attempted to evaluate whether Regulation VIII fulfills RACM/BACM for this activity. Therefore, we disagree with the commenters' statement that on-field agricultural source activity has been exempted from RACM through Regulation VIII; rather, it is just not a regulated activity under Regulation VIII.

We agree with the commenters that it is important for the District to evaluate the impact and appropriate controls for on-field agricultural activity. The evaluation of whether and what controls are necessary for on-field agricultural activities to fulfill RACM/BACM should be performed in context of a rule that regulates such activity or of an overall PM–10 plan for the area. In 1991, CARB submitted an overall PM–10 plan for the area which purported to address RACM generally as well as on-field agricultural activity. We have not acted on this plan, and are not doing so now, as we are only acting on Regulation VIII. As a result of EPA's finding that the San Joaquin Valley failed to attain the PM–10 standards by the statutory deadline of December 31, 2001, the State must submit a new plan for the area to EPA by December 31, 2002. 67 FR 48039 (July 23, 2002). EPA also published a finding of nonsubmittal of a PM–10 plan for the San Joaquin Valley on March 18, 2002 (67 FR 11925), which could result

in the imposition of sanctions. We expect that these EPA actions will lead to development in the near term of a thorough RACM/BACM analysis and an overall PM–10 plan which include on-field agriculture activity.

Comment 6: Other areas have adopted RACM or BACM measures that apply to farming operations that EPA has approved. For example, South Coast Air Quality Management District Rule 403(h)(1)(B) applies fugitive dust requirements to agricultural sources greater than 10 acres, and Maricopa County Rule 310 requires RACM at cattle feedlots and livestock areas. Regulation VIII, in contrast, fully exempts on-field agricultural activities in violation of CAA § 189(a).

Response 6: See Response 5.

Comment 7: EPA recently issued a Notice of Deficiency (NOD) that found California's statutory agricultural permit exemption inconsistent with CAA Title V. CAA Title I also provides no such exemption for agricultural sources, and any rulemaking which generally exempts agriculture from § 189(a) RACM requirements is inconsistent with the CAA under the same rationale articulated in the Notice of Deficiency.

Response 7: The commenter is correct that Title I and Title V do not exempt major agricultural sources of air pollution from CAA permitting requirements. CAA § 189(a), however, relies on a separate analysis to determine whether agricultural sources should be regulated for RACM purposes. Under § 189(a), a permitting agency need not regulate or can limit regulation of certain activities or source categories from RACM requirements if one of the following two criteria are met: (a) emissions from the activity or source category are not significant; or (b) the level of imposed control fulfills RACM in light of cost-effectiveness, technical feasibility and attainment needs. However, as stated in Response 5, since Regulation VIII never purported to cover on-field agricultural activity, such an analysis is not necessary in the context of Regulation VIII. This analysis will be necessary in a rule that regulates such activity or in an overall PM–10 plan for the area.

Comment 8: EPA's finding that ''it is more likely than not'' that Regulation VIII fulfills the CAA 189(a) requirement is contradicted by the substantial agriculture-related deficiencies summarized in comments 3 through 7 that exempt in total nearly half of all sources.

Response 8: See Response 5 regarding on-field agricultural sources. The comment also concerns the exemption for implements of husbandry and the enforceability of FPMPs regarding agriculturally-owned unpaved roads. See Response 4 regarding FPMP enforceability. Our ''more likely than not'' RACM finding for Regulation VIII Rule 8081 coverage of agriculturally-owned unpaved roads relies on the expectation that a reasonable percentage of these roads are subject to control at the 75 vehicle trips per day threshold during harvest season. We expect most of this traffic will be haul trucks carrying product to and from farms as opposed to implements of husbandry such as tractors. We agree with the commenter, however, that the actual impact of this exemption has not been thoroughly quantified, which is partly the basis for our action to approve this regulation only conditionally.

Comment 9: EPA's 2002 proposed conditional approval of Regulation VIII for RACM is illegal in light of EPA's own finding that SJVUAPCD has not completely fulfilled the requirement described in 57 FR 13498 and 13540 (April 16, 1992) to apply RACM to the significant source categories subject to Regulation VIII.

Response 9: As discussed in our 2002 proposed action, we believe that Regulation VIII fulfills the substantive RACM requirements for the activities it covers and it is inappropriate to immediately initiate sanctions throughout the San Joaquin Valley solely because SJVUAPCD failed to complete a detailed RACM justification. SJVUAPCD did provide substantial cost-effectiveness data and other information that suggests that Regulation VIII fulfills RACM for the activities it covers. While a more complete RACM justification is required under the Act, we do not believe, in this case, that it is likely to lead to additional emission reductions. We have proposed, therefore, to temporarily stay the sanctions clock to allow a relatively short time for SJVUAPCD to provide the necessary analysis.

Comment 10: SJVUAPCD is long overdue to require RACM and BACM pursuant to CAA § 189(a) and § 189(b), and has failed to adopt RACM and BACM as soon as practicable as required by the CAA. There is no basis for further postponing final action on RACM. EPA's proposed actions allowing SJVUAPCD to justify, revise, and resubmit Regulation VIII, extends the mandatory RACM and BACM deadlines and violates the CAA.

Response 10: We concur that RACM and BACM were not applied in the San Joaquin Valley according to Clean Air Act deadlines. We believe, however, that RACM is now applied in the area for the activities covered by Regulation VIII. We do not view our conditional approval of these rules as RACM as postponing RACM implementation given our ''more likely than not'' finding that the requirements now meet RACM. See Response 11 regarding BACM.

Comment 11: In this proposed limited approval/disapproval, EPA claims that it had not previously started a sanction clock for § 189(b) deficiencies because SJVUAPCD explicitly adopted the April 25, 1996 Regulation VIII rules for purposes of maintaining RACM, rather than BACM. However, the February 8, 1997 statutory deadline for implementing BACM was long past even at the time of EPA's first disapproval of Regulation VIII, proposed on September 23, 1999 and finalized on March 8, 2000. Thus, EPA's disapproval at that time applied to the requirements of both RACM and BACM, and EPA's proposed action and responses to comments at that time clearly showed that it was evaluating the regulation for both standards.

EPA cannot now propose limited approval/limited disapproval for the SIP revision's failure to demonstrate BACM when, two years ago, EPA took the same final agency action. It is an abuse of discretion to reinterpret the March 8, 2000 final rulemaking in such a fashion so that EPA may inappropriately toll the sanctions clock. EPA has a mandatory duty to impose sanctions under § 179(a) unless all previously identified deficiencies have been corrected. It is clear that SJVUAPCD has not corrected the BACM deficiencies, which EPA concedes in this proposed rulemaking. EPA's proposal to grant limited approval/disapproval is thus inconsistent with the plain language of CAA § 179(a).

Response 11: We agree that the BACM implementation deadline had passed before EPA proposed a limited approval/disapproval of Regulation VIII in 1999. This does not determine, however, that our March 8, 2000 final action validly established a BACM sanctions clock. Our March 2000 action addressed rules that were submitted to fulfill RACM, not BACM. As a result and as discussed in our April 2002 proposed action, we do not believe that a sanctions clock could be started for BACM deficiencies under such circumstances. *See* Response 5 (where we similarly conclude that we cannot disapprove Regulation VIII for its exemption of on-field agricultural sources because the regulation does not purport to cover those sources for RACM purposes). However, the latest version of Regulation VIII submitted on December 6, 2001, does purport to meet BACM requirements. Therefore, by this

final rule, we are disapproving the 2001 version of Regulation VIII for failure to adequately demonstrate BACM and have started a valid BACM sanctions clock for SJVUAPCD to correct the deficiencies. In accordance with section 179 of the Clean Air Act, the State has 18 months to correct the deficiencies identified in EPA's action prior to the imposition of sanctions.

Comment 12: EPA's April 1, 2002 interim final determination must be withdrawn because EPA cannot approve any individual rule without first approving an attainment demonstration. The judgement that EPA must make in approving a SIP revision, is ''to measure the existing level of pollution, compare it with national standards, and determine the effect on this comparison of specified emission modifications.'' Without an attainment demonstration, it is impossible to determine whether any revision is ''adequate to the task.'' *Hall* v. *EPA,* 263 F.3d 937 (9th Cir. 2001).

Response 12: EPA regularly takes action on individual rules independent of action on overarching plans. As with the thousands of other rules we have acted on independent of attainment demonstrations, we believe we can effectively evaluate compliance with § 110 and other CAA requirements and approve or disapprove these rules consistent with § 110(k). In fact, the Court of Appeals for the Ninth Circuit specifically endorsed this practice in *Hall.* The Court held that ''[t]he Act explicitly contemplates that * * * attainment demonstrations may be submitted for EPA review at different times than other elements of the States' SIP revisions (for example, revisions to control measures) are submitted for review.'' *Id.* at 937.

The Commenter reasoned that language it quoted from *Hall* requires a rigorous comparison by EPA of emission reductions resulting from a proposed SIP revision to overall reductions necessary for attainment, and such an analysis cannot be done outside the context of an attainment demonstration. However, other language in the Court's *Hall* ruling softened this requirement in circumstances where an attainment demonstration is not yet in place. In the absence of an attainment plan, the Court held that EPA need only show that ''the particular plan revision before it is consistent with the development of an overall plan capable of meeting the Act's attainment requirements.'' *Id.* at 938. In accordance with *Hall,* we have determined that Regulation VIII is consistent with development of an overall plan and we intend to evaluate Regulation VIII in the context of a PM–10 plan when the plan is submitted to us for review.

Comment 13: For reasons given above, EPA must fully disapprove the Regulation VIII submittal, withdraw the interim final determination that SJVUAPCD has corrected the deficiencies, reinstate the associated sanctions clock, and promulgate a FIP.

Response 13: For reasons discussed in the other responses, nothing in the comments has caused us to change our position as described in the proposal.

Following the close of the comment period, we received two additional inquiries from Earthjustice. While EPA is not obligated to summarize or respond to these inquiries, we have done so below.

Comment 14: Did EPA consider fugitive dust control measures adopted in other PM–10 nonattainment areas when evaluating SJVUAPCD's Regulation VIII for RACM and/or BACM? If so, is the review of other rules part of the record for EPA's action on Regulation VIII?

Response 14: EPA considered control measures adopted in Maricopa County, Clark County and other areas as background information during our evaluation of Regulation VIII. Where EPA's approval of control measures for these other areas has been published in the **Federal Register**, they are incorporated by reference into the administrative record for EPA's decision on Regulation VIII.

Comment 15: What is the origin of the ''more likely than not'' criteria used by EPA in its decision to conditionally approve Regulation VIII for RACM purposes.

Response 15: In the preamble to the federal regulations implementing the sanctions provision of CAA Section 179, EPA stated that it can conditionally approve a SIP revision when ''it believes it is more likely than not that the State is complying with the relevant requirements of the Act.'' 59 FR 39832, 39838 (August 4, 1994). EPA clarified that this finding can also serve as a basis for an interim final determination that a State has corrected previously identified deficiencies.

III. EPA Action

No comments were submitted that change our assessment of the rules as described in our proposed action. Therefore, as authorized in CAA section 110(k)(4), EPA is finalizing a conditional approval of Rules 8011, 8021, 8031, 8041, 8061, 8071 and 8081 with respect to CAA section 172(c)(1) and 189(a)(1)(C) RACM requirements. We have concluded that the December 6, 2001 submittal corrects the prior enforceability and RACM deficiencies identified in our March 8, 2000 final action, subject to one condition. That condition is for SJVUAPCD to provide a comprehensive and adequate demonstration that these rules fulfill RACM requirements for the source categories covered by Regulation VIII. SJVUAPCD has committed to provide this RACM demonstration within one year after the date of publication of this final action. This conditional approval action terminates the CAA section 189(a) sanction implications of our March 8, 2000 final action. However, the conditional approval will be treated as a disapproval, with section 189(a) sanctions immediately reinstated, if SJVUAPCD fails to fulfill this commitment within the statutory one year period or upon EPA's final disapproval of a submitted RACM demonstration.

In addition, as authorized in sections 110(k)(3) and 301(a) of the Act, EPA is finalizing a limited approval of submitted Rules 8011, 8021, 8031, 8041, 8051, 8061, 8071 and 8081 with respect to CAA section 189(b)(1)(B) BACM requirements. Specifically, the state has failed to demonstrate that thresholds of source coverage fulfill BACM requirements. This action incorporates the submitted rules into the California SIP, including those provisions identified as deficient. As authorized under section 110(k)(3), EPA is simultaneously finalizing a limited disapproval of the rule with respect to BACM requirements. As a result, sanctions will be imposed unless EPA approves subsequent SIP revisions that correct the deficiencies within 18 months of the effective date of this action. These sanctions will be imposed under CAA section 179 according to 40 CFR 52.31. In addition, EPA must promulgate a federal implementation plan (FIP) under section 110(c) unless we approve subsequent SIP revisions that correct the deficiencies within 24 months. Note that the submitted rules have been adopted by SJVUAPCD, and EPA's final limited disapproval does not prevent the local agency from enforcing them.

IV. Statutory and Executive Order Reviews

A. Executive Order 12866

The Office of Management and Budget has exempted this regulatory action from Executive Order 12866, entitled ''Regulatory Planning and Review.''

B. Executive Order 13045

Executive Order 13045, entitled Protection of Children from

Environmental Health Risks and Safety Risks (62 FR 19885, April 23, 1997), applies to any rule that: (1) Is determined to be ''economically significant'' as defined under Executive Order 12866, and (2) concerns an environmental health or safety risk that EPA has reason to believe may have a disproportionate effect on children. If the regulatory action meets both criteria, the Agency must evaluate the environmental health or safety effects of the planned rule on children, and explain why the planned regulation is preferable to other potentially effective and reasonably feasible alternatives considered by the Agency.

This rule is not subject to Executive Order 13045 because it does not involve decisions intended to mitigate environmental health or safety risks.

C. Executive Order 13132

Executive Order 13132, entitled Federalism (64 FR 43255, August 10, 1999) revokes and replaces Executive Orders 12612, Federalism and 12875, Enhancing the Intergovernmental Partnership. Executive Order 13132 requires EPA to develop an accountable process to ensure ''meaningful and timely input by State and local officials in the development of regulatory policies that have federalism implications.'' ''Policies that have federalism implications'' is defined in the Executive Order to include regulations that have ''substantial direct effects on the States, on the relationship between the national government and the States, or on the distribution of power and responsibilities among the various levels of government.'' Under Executive Order 13132, EPA may not issue a regulation that has federalism implications, that imposes substantial direct compliance costs, and that is not required by statute, unless the Federal government provides the funds necessary to pay the direct compliance costs incurred by State and local governments, or EPA consults with State and local officials early in the process of developing the proposed regulation. EPA also may not issue a regulation that has federalism implications and that preempts State law unless the Agency consults with State and local officials early in the process of developing the proposed regulation.

This rule will not have substantial direct effects on the States, on the relationship between the national government and the States, or on the distribution of power and responsibilities among the various levels of government, as specified in Executive Order 13132, because it merely acts on a state rule implementing a federal standard, and does not alter the relationship or the distribution of power and responsibilities established in the Clean Air Act. Thus, the requirements of section 6 of the Executive Order do not apply to this rule.

D. Executive Order 13175

Executive Order 13175, entitled ''Consultation and Coordination with Indian Tribal Governments'' (65 FR 67249, November 6, 2000), requires EPA to develop an accountable process to ensure ''meaningful and timely input by tribal officials in the development of regulatory policies that have tribal implications.'' ''Policies that have tribal implications'' is defined in the Executive Order to include regulations that have ''substantial direct effects on one or more Indian tribes, on the relationship between the Federal government and the Indian tribes, or on the distribution of power and responsibilities between the Federal government and Indian tribes.''

This final rule does not have tribal implications. It will not have substantial direct effects on tribal governments, on the relationship between the Federal government and Indian tribes, or on the distribution of power and responsibilities between the Federal government and Indian tribes, as specified in Executive Order 13175. Thus, Executive Order 13175 does not apply to this rule.

E. Executive Order 13211

This rule is not subject to Executive Order 13211, ''Actions Concerning Regulations That Significantly Affect Energy Supply, Distribution, or Use'' (66 FR 28355 (May 22, 2001)) because it is not a significant regulatory action under Executive Order 12866.

F. Regulatory Flexibility Act

The Regulatory Flexibility Act (RFA) generally requires an agency to conduct a regulatory flexibility analysis of any rule subject to notice and comment rulemaking requirements unless the agency certifies that the rule will not have a significant economic impact on a substantial number of small entities. Small entities include small businesses, small not-for-profit enterprises, and small governmental jurisdictions.

This final rule will not have a significant impact on a substantial number of small entities because SIP approvals under section 110 and subchapter I, part D of the Clean Air Act do not create any new requirements but simply act on requirements that the State is already imposing. Therefore, because the Federal SIP approval does not create any new requirements, I certify that this action will not have a significant economic impact on a substantial number of small entities.

EPA's disapproval of the state request under section 110 and subchapter I, part D of the Clean Air Act does not affect any existing requirements applicable to small entities. Any pre-existing federal requirements remain in place after this disapproval. Federal disapproval of the state submittal does not affect state enforceability. Moreover, EPA's disapproval of the submittal does not impose any new Federal requirements. Therefore, I certify that this action will not have a significant economic impact on a substantial number of small entities.

Moreover, due to the nature of the Federal-State relationship under the Clean Air Act, preparation of flexibility analysis would constitute Federal inquiry into the economic reasonableness of state action. The Clean Air Act forbids EPA to base its actions concerning SIPs on such grounds. *Union Electric Co.* v. *U.S. EPA,* 427 U.S. 246, 255–66 (1976); 42 U.S.C. 7410(a)(2).

G. Unfunded Mandates

Under section 202 of the Unfunded Mandates Reform Act of 1995 (''Unfunded Mandates Act''), signed into law on March 22, 1995, EPA must prepare a budgetary impact statement to accompany any proposed or final rule that includes a Federal mandate that may result in estimated costs to State, local, or tribal governments in the aggregate; or to the private sector, of $100 million or more. Under section 205, EPA must select the most cost-effective and least burdensome alternative that achieves the objectives of the rule and is consistent with statutory requirements. Section 203 requires EPA to establish a plan for informing and advising any small governments that may be significantly or uniquely impacted by the rule.

EPA has determined that the action promulgated does not include a Federal mandate that may result in estimated costs of $100 million or more to either State, local, or tribal governments in the aggregate, or to the private sector. This Federal action acts on pre-existing requirements under State or local law, and imposes no new requirements. Accordingly, no additional costs to State, local, or tribal governments, or to the private sector, result from this action.

H. National Technology Transfer and Advancement Act

Section 12 of the National Technology Transfer and Advancement Act (NTTAA) of 1995 requires Federal agencies to evaluate existing technical standards when developing a new regulation. To comply with NTTAA, EPA must consider and use ''voluntary consensus standards'' (VCS) if available and applicable when developing programs and policies unless doing so would be inconsistent with applicable law or otherwise impractical.

EPA believes that VCS are inapplicable to today's action because it does not require the public to perform activities conducive to the use of VCS.

I. Submission to Congress and the Comptroller General

The Congressional Review Act, 5 U.S.C. 801 *et seq.*, as added by the Small Business Regulatory Enforcement Fairness Act of 1996, generally provides that before a rule may take effect, the agency promulgating the rule must submit a rule report, which includes a copy of the rule, to each House of the Congress and to the Comptroller General of the United States. EPA will submit a report containing this rule and other required information to the U.S. Senate, the U.S. House of Representatives, and the Comptroller General of the United States prior to publication of the rule in the **Federal Register**. A major rule cannot take effect until 60 days after it is published in the **Federal Register**. This rule is not a ''major'' rule as defined by 5 U.S.C. 804(2).

J. Petitions for Judicial Review

Under section 307(b)(1) of the Clean Air Act, petitions for judicial review of this action must be filed in the United States Court of Appeals for the appropriate circuit by April 28, 2003. Filing a petition for reconsideration by the Administrator of this final rule does not affect the finality of this rule for the purposes of judicial review nor does it extend the time within which a petition for judicial review may be filed, and shall not postpone the effectiveness of such rule or action. This action may not be challenged later in proceedings to enforce its requirements. (*See* section 307(b)(2).)

List of Subjects in 40 CFR Part 52

Environmental protection, Air pollution control, Incorporation by reference, Intergovernmental relations, Particulate matter, Reporting and recordkeeping requirements.

Dated: January 22, 2003.

Wayne Nastri,

Regional Administrator, Region IX.

Part 52, chapter I, title 40 of the Code of Federal Regulations is amended as follows:

PART 52—[AMENDED]

1. The authority citation for Part 52 continues to read as follows:

Authority: 42 U.S.C. 7401 *et seq.*

Subpart F—California

2. Section 52.220 is amended by adding paragraph (c)(304) to read as follows:

§ 52.220 Identification of plan.

* * * * *

(c) * * *

(304) New and amended regulations for the following APCD were submitted on December 6, 2001, by the Governor's designee.

(i) Incorporation by reference.

(A) San Joaquin Valley Unified Air Pollution Control District.

(*1*) Rules 8011, 8021, 8031, 8041, 8051, 8061, 8071, and 8081, adopted on November 15, 2001.

* * * * *

[FR Doc. 03–4383 Filed 2–25–03; 8:45 am]

BILLING CODE 6560–50–P

ENVIRONMENTAL PROTECTION AGENCY

40 CFR Part 52

[CA262–0369a; FRL–7451–4]

Revisions to the California State Implementation Plan, Monterey Bay Unified Air Pollution Control District, San Joaquin Valley Unified Air Pollution Control District

AGENCY: Environmental Protection Agency (EPA).

ACTION: Direct final rule.

SUMMARY: EPA is taking direct final action to approve revisions to the Monterey Bay Unified Air Pollution Control District (MBUAPCD) and San Joaquin Valley Unified Air Pollution Control District (SJVUAPCD) portion of the California State Implementation Plan (SIP). These revisions concern volatile organic compound (VOC) emissions from organic liquid storage and VOC and nitrogen dioxide (NO_X) emissions from flare operations at industrial sites such as oil refineries, chemical manufacturers, and oil wells. We are approving local rules that regulate these emission sources under the Clean Air Act as amended in 1990 (CAA or the Act).

DATES: This rule is effective on April 28, 2003 without further notice, unless EPA receives adverse comments by March 28, 2003. If we receive such comment, we will publish a timely withdrawal in the **Federal Register** to notify the public that this rule will not take effect.

ADDRESSES: Mail comments to Andy Steckel, Rulemaking Office Chief (AIR–4), U.S. Environmental Protection Agency, Region IX, 75 Hawthorne Street, San Francisco, CA 94105–3901.

You can inspect copies of the submitted SIP revisions and EPA's technical support documents (TSDs) at our Region IX office during normal business hours. You may also see copies of the submitted SIP revisions at the following locations:

Air and Radiation Docket and Information Center, U.S. Environmental Protection Agency, Room B–102, 1301 Constitution Avenue, NW., (Mail Code 6102T), Washington, DC 20460;

California Air Resources Board, Stationary Source Division, Rule Evaluation Section, 1001 ''I'' Street, Sacramento, CA 95814;

Monterey Bay Unified Air Pollution Control District, 24580 Silver Cloud Court, Monterey, CA 93940; and,

San Joaquin Valley Unified Air Pollution Control District, 1990 East Gettysburg Street, Fresno, CA 93726.

A copy of the rule may also be available via the Internet at *http://www.arb.ca.gov/drdb/drdbltxt.htm.* Please be advised that this is not an EPA website and may not contain the same version of the rule that was submitted to EPA.

FOR FURTHER INFORMATION CONTACT: Jerald S. Wamsley, EPA Region IX, (415) 947–4111.

SUPPLEMENTARY INFORMATION: Throughout this document, ''we,'' ''us'' and ''our'' refer to EPA.

Table of Contents

I. The State's Submittal
A. What rules did the State submit?
B. Are there other versions of these rules?
C. What is the purpose of the submitted rules?
II. EPA's Evaluation and Action
A. How is EPA evaluating the rules?
B. Do the rules meet the evaluation criteria?
C. EPA recommendations to further improve the rules.
D. Public comment and final action.
III. Background Information
Why were these rules submitted?
IV. Administrative Requirements

I. The State's Submittal

A. What Rules Did the State Submit?

Table 1 lists the rules we are approving with the dates that they were adopted by the local air agencies and submitted by the California Air Resources Board (CARB).

TABLE 1.—SUBMITTED RULES

Local agency	Rule #	Rule title	Adopted	Submitted
MBUAPCD	417	Storage of Organic Liquids	12/19/01	3/15/02
SJVUAPCD	4311	Flares	6/20/02	8/06/02

On May 7, 2002 and August 30, 2002 respectively, EPA found that the submittals for MBUAPCD Rule 417 and SJVUAPCD Rule 4311 met the completeness criteria in 40 CFR part 51, appendix V. These criteria must be met before formal EPA review may begin.

B. Are There Other Versions of These Rules?

We approved a version of MBUAPCD Rule 417 into the SIP on February 15, 1995 (60 FR 8565); there have been no intervening submittals of the rule. SJVUAPCD Rule 4311 is a new rule and there are no previous versions of it in the SIP.

C. What Is the Purpose of the Submitted Rule or Rule Revisions?

MBUAPCD Rule 417 is designed to reduce VOC emissions at industrial sites engaged in storing any organic liquids with a vapor pressure greater than 0.5 pounds per square inch atmospheric. VOCs are emitted from containment vessels such as tanks and transfer lines due to the high vapor pressure of the processed crude oil and organic liquids. MBUAPCD Rule 417 was amended to require that the true vapor pressure of petroleum products with a API gravity of less than 20 degrees be determined by the ''Test Method for Vapor Pressure of Reactive Organic Compounds in Heavy Crude Oil Using Gas Chromatography'' as developed by Lawrence Berkeley National Laboratory.

SJVUAPCD Rule 4311 is a new rule designed to decrease VOC and NO_X emissions from industries such as refineries, unrecoverable gases from oil wells, vented gases from blast furnaces, unused gases from coke ovens, and gaseous wastes from chemical industries by requiring that flares be operated in a prescribed manner. Rule 4311 includes the following general provisions:

—Purpose and applicability;
—Definitions of terms used within the rule;
—Exemptions from the rule;
—Requirements mandating particular flare operation protocols, equipment, and operations including VOC and NO_X limits for ground-level enclosed flares;
—Record keeping to demonstrate compliance with the rule; and,
—Test methods for determining compliance with the rule.

The EPA's subject TSD has more information about these rules.

II. EPA's Evaluation and Action

A. How Is EPA Evaluating the Rules?

Generally, SIP rules must be enforceable (*see* section 110(a) of the Act), must require Reasonably Available Control Technology (RACT) for major sources in nonattainment areas (*see* section 182(a)(2)(A)), and must not relax existing requirements (*see* sections 110(l) and 193). The MBUAPCD regulates an area attaining the federal ozone standard and must have RACT rules needed to maintain this status. The SJVUAPCD regulates an ozone nonattainment area (*see* 40 CFR part 81), so Rule 4311 must fulfill RACT.

Guidance and policy documents that we used to help evaluate consistently specific enforceability and RACT requirements include the following:

—Portions of the proposed post-1987 ozone and carbon monoxide policy that concern RACT, 52 FR 45044, November 24, 1987;
—''Issues Relating to VOC Regulation Cutpoints, Deficiencies, and Deviations,'' EPA, May 25, 1988 (the Bluebook);
—''Guidance Document for Correcting Common VOC & Other Rule Deficiencies,'' EPA Region 9, August 21, 2001 (the Little Bluebook);
—''Control of Volatile Organic Emissions from Petroleum Liquid Storage in External Floating Roof Tanks,'' EPA–450/2–78–047, USEPA, December 1978; and
—''Control of Volatile Organic Emissions from Storage of Petroleum Liquids in Fixed-Roof Tanks,'' EPA–450/2–77–036, USEPA, December 1977.

B. Do the Rules Meet the Evaluation Criteria?

We believe these rules are consistent with the relevant policy and guidance regarding enforceability, RACT, and SIP relaxations. The subject TSD has more information on our evaluation.

C. EPA Recommendations To Further Improve the Rules

There are no additional rule revisions recommended for the next time the local agency modifies the rules.

D. Public Comment and Final Action

As authorized in section 110(k)(3) of the Act, EPA is fully approving the submitted rules because we believe they fulfill all relevant requirements. We do not think anyone will object to this approval, so we are finalizing it without proposing it in advance. However, in the Proposed Rules section of this **Federal Register**, we are simultaneously proposing approval of the same submitted rules. If we receive adverse comments by March 28, 2003, we will publish a timely withdrawal in the **Federal Register** to notify the public that the direct final approval will not take effect and we will address the comments in a subsequent final action based on the proposal. If we do not receive timely adverse comments, the direct final approval will be effective without further notice on April 28, 2003. This will incorporate these rules into the federally enforceable SIP.

Please note that if EPA receives adverse comment on an amendment, paragraph, or section of this rule and if that provision may be severed from the remainder of the rule, EPA may adopt as final those provisions of the rule that are not the subject of an adverse comment.

III. Background Information

Why Were These Rules Submitted?

VOCs help produce ground-level ozone and smog, which harm human health and the environment. Section 110(a) of the CAA requires states to submit regulations that control VOC

emissions. Table 2 lists some of the national milestones leading to the submittal of these local agency VOC rules.

TABLE 2.—OZONE NONATTAINMENT MILESTONES

Date	Event
March 3, 1978	EPA promulgated a list of ozone nonattainment areas under the Clean Air Act as amended in 1977. 43 FR 8964; 40 CFR 81.305.
May 26, 1988	EPA notified Governors that parts of their SIPs were inadequate to attain and maintain the ozone standard and requested that they correct the deficiencies (EPA's SIP-Call). See section 110(a)(2)(H) of the pre-amended Act.
November 15, 1990	Clean Air Act Amendments of 1990 were enacted. Pub. L. 101–549, 104 Stat. 2399, codified at 42 U.S.C. 7401–7671q.
May 15, 1991	Section 182(a)(2)(A) requires that ozone nonattainment areas correct deficient RACT rules by this date.

IV. Administrative Requirements.

Under Executive Order 12866 (58 FR 51735, October 4, 1993), this action is not a ''significant regulatory action'' and therefore is not subject to review by the Office of Management and Budget. For this reason, this action is also not subject to Executive Order 13211, ''Actions Concerning Regulations That Significantly Affect Energy Supply, Distribution, or Use'' (66 FR 28355, May 22, 2001). This action merely approves state law as meeting federal requirements and imposes no additional requirements beyond those imposed by state law. Accordingly, the Administrator certifies that this rule will not have a significant economic impact on a substantial number of small entities under the Regulatory Flexibility Act (5 U.S.C. 601 *et seq.*). Because this rule approves pre-existing requirements under state law and does not impose any additional enforceable duty beyond that required by state law, it does not contain any unfunded mandate or significantly or uniquely affect small governments, as described in the Unfunded Mandates Reform Act of 1995 (Pub. L. 104–4).

This rule also does not have tribal implications because it will not have a substantial direct effect on one or more Indian tribes, on the relationship between the Federal Government and Indian tribes, or on the distribution of power and responsibilities between the Federal Government and Indian tribes, as specified by Executive Order 13175 (65 FR 67249, November 9, 2000). This action also does not have Federalism implications because it does not have substantial direct effects on the States, on the relationship between the national government and the States, or on the distribution of power and responsibilities among the various levels of government, as specified in Executive Order 13132 (64 FR 43255, August 10, 1999). This action merely approves a state rule implementing a Federal standard, and does not alter the relationship or the distribution of power and responsibilities established in the Clean Air Act. This rule also is not subject to Executive Order 13045, ''Protection of Children from Environmental Health Risks and Safety Risks'' (62 FR 19885, April 23, 1997), because it is not economically significant.

In reviewing SIP submissions, EPA's role is to approve state choices, provided that they meet the criteria of the Clean Air Act. In this context, in the absence of a prior existing requirement for the State to use voluntary consensus standards (VCS), EPA has no authority to disapprove a SIP submission for failure to use VCS. It would thus be inconsistent with applicable law for EPA, when it reviews a SIP submission, to use VCS in place of a SIP submission that otherwise satisfies the provisions of the Clean Air Act. Thus, the requirements of section 12(d) of the National Technology Transfer and Advancement Act of 1995 (15 U.S.C. 272 note) do not apply. This rule does not impose an information collection burden under the provisions of the Paperwork Reduction Act of 1995 (44 U.S.C. 3501 *et seq.*).

The Congressional Review Act, 5 U.S.C. 801 *et seq.*, as added by the Small Business Regulatory Enforcement Fairness Act of 1996, generally provides that before a rule may take effect, the agency promulgating the rule must submit a rule report, which includes a copy of the rule, to each House of the Congress and to the Comptroller General of the United States. EPA will submit a report containing this rule and other required information to the U.S. Senate, the U.S. House of Representatives, and the Comptroller General of the United States prior to publication of the rule in the **Federal Register**. A major rule cannot take effect until 60 days after it is published in the **Federal Register**. This action is not a ''major rule'' as defined by 5 U.S.C. 804(2).

Under section 307(b)(1) of the Clean Air Act, petitions for judicial review of this action must be filed in the United States Court of Appeals for the appropriate circuit by April 28, 2003. Filing a petition for reconsideration by the Administrator of this final rule does not affect the finality of this rule for the purposes of judicial review nor does it extend the time within which a petition for judicial review may be filed, and shall not postpone the effectiveness of such rule or action. This action may not be challenged later in proceedings to enforce its requirements. (*See* section 307(b)(2).)

List of Subjects in 40 CFR Part 52

Environmental protection, Air pollution control, Incorporation by reference, Intergovernmental relations, Ozone, Reporting and recordkeeping requirements, Nitrogen dioxide, Volatile organic compounds.

Dated: December 6, 2002.

Alexis Strauss,

Acting Regional Administrator, Region IX.

Part 52, Chapter I, Title 40 of the Code of Federal Regulations is amended as follows:

PART 52 [AMENDED]

1. The authority citation for part 52 continues to read as follows:

Authority: 42 U.S.C. 7401 *et seq.*

Subpart F—California

2. Section 52.220 is amended by adding paragraphs (c)(297)(i)(D)(2) and (c)(303)(i)(C)(1) to read as follows:

§ 52.220 Identification of plan.

* * * * *

(c) * * *

(297) * * *

(i) * * *

(D) * * *

(*2*) Rule 417 adopted on September 1, 1974, and amended on December 19, 2001.

* * * * *

(c) * * *

(303) * * *

(i) * * *

(C) San Joaquin Valley Unified Air Pollution Control District.

(*1*) Rule 4311 adopted on June 20, 2002.

* * * * *

[FR Doc. 03–4381 Filed 2–25–03; 8:45 am]

BILLING CODE 6560–50–P

ENVIRONMENTAL PROTECTION AGENCY

40 CFR Part 52

[CA273–0381c; FRL–7452–5]

Interim Final Determination To Stay and/or Defer Sanctions, Imperial County Air Pollution Control District

AGENCY: Environmental Protection Agency (EPA).

ACTION: Interim final rule.

SUMMARY: EPA is making an interim final determination to stay and/or defer imposition of sanctions based on a proposed approval of revisions to the Imperial County Air Pollution Control District (ICAPCD) portion of the California State Implementation Plan (SIP) published elsewhere in today's **Federal Register.** The revisions concern ICAPCD Rule 420, Livestock Feed Yards.

DATES: This interim final determination is effective on February 26, 2003. However, comments will be accepted until March 28, 2003.

ADDRESSES: Mail comments to Andy Steckel, Rulemaking Office Chief (AIR–4), U.S. Environmental Protection Agency, Region IX, 75 Hawthorne Street, San Francisco, CA 94105.

You can inspect copies of the submitted rule revisions and EPA's technical support document (TSD) at our Region IX office during normal business hours. You may also see copies of the submitted rule revisions and TSD at the following locations:

Rulemaking Office (AIR–4), Air Division, U.S. Environmental Protection Agency, Region IX, 75 Hawthorne Street, San Francisco, CA 94105;

California Air Resources Board, Stationary Source Division, Rule Evaluation Section, 1001 ''I'' Street, Sacramento, CA 95814; and,

Imperial County Air Pollution Control District, 150 South 9th Street, El Centro, CA 92243.

A copy of the rule may also be available via the Internet at *http://www.arb.ca.gov/drdb/drdbltxt.htm.* Please be advised that this is not an EPA Web site and may not contain the same version of the rule that was submitted to EPA.

FOR FURTHER INFORMATION CONTACT: Jerald S. Wamsley, EPA Region IX, (415) 947–4111.

SUPPLEMENTARY INFORMATION: Throughout this document, ''we,'' ''us'' and ''our'' refer to EPA.

I. Background

On July 11, 2001 (66 FR 36170), we published a limited approval and limited disapproval of ICAPCD Rule 420 as adopted locally on September 14, 1999 and submitted by the State on May 26, 2000. We based our limited disapproval action on certain deficiencies in the submittal. This disapproval action started a sanctions clock for imposition of offset sanctions 18 months after August 10, 2001 and highway sanctions 6 months later, pursuant to section 179 of the Clean Air Act (CAA) and our regulations at 40 CFR 52.31.

On August 13, 2002, ICAPCD adopted revisions to Rule 420 that were intended to correct the deficiencies identified in our disapproval action. On October 16, 2002, the State submitted these revisions to EPA. In the Proposed Rules section of today's **Federal Register,** we have proposed approval of this submittal because we believe it corrects the deficiencies identified in our July 11, 2001 disapproval action. Based on today's proposed approval, we are taking this final rulemaking action, effective on publication, to stay and/or defer imposition of sanctions that were triggered by our July 11, 2001 disapproval.

EPA is providing the public with an opportunity to comment on this stay/deferral of sanctions. If comments are submitted that change our assessment described in this final determination and the proposed approval of revised ICAPCD Rule 420, we intend to take subsequent final action to reimpose sanctions pursuant to 40 CFR 51.31(d). If no comments are submitted that change our assessment, then all sanctions and sanction clocks will be permanently terminated on the effective date of a final rule approval.

II. EPA Action

We are making an interim final determination to stay and/or defer CAA section 179 sanctions associated with ICAPCD Rule 420 based on our concurrent proposal to approve the State's SIP revision as correcting deficiencies that initiated sanctions.

Because EPA has preliminarily determined that the State has corrected the deficiencies identified in EPA's limited disapproval action, relief from sanctions should be provided as quickly as possible. Therefore, EPA is invoking the good cause exception under the Administrative Procedure Act (APA) in not providing an opportunity for comment before this action takes effect (5 U.S.C. 553(b)(3)). However, by this action EPA is providing the public with a chance to comment on EPA's determination after the effective date, and EPA will consider any comments received in determining whether to reverse such action.

EPA believes that notice-and-comment rulemaking before the effective date of this action is impracticable and contrary to the public interest. EPA has reviewed the State's submittal and, through its proposed action, is indicating that it is more likely than not that the State has corrected the deficiencies that started the sanctions clocks. Therefore, it is not in the public interest to initially impose sanctions or to keep applied sanctions in place when the State has most likely done all it can to correct the deficiencies that triggered the sanctions clocks. Moreover, it would be impracticable to go through notice-and-comment rulemaking on a finding that the State has corrected the deficiencies prior to the rulemaking approving the State's submittal. Therefore, EPA believes that it is necessary to use the interim final rulemaking process to stay and/or defer sanctions while EPA completes its rulemaking process on the approvability of the State's submittal. Moreover, with respect to the effective date of this action, EPA is invoking the good cause exception to the 30-day notice requirement of the APA because the purpose of this notice is to relieve a restriction (5 U.S.C. 553(d)(1)).

III. Statutory and Executive Order Reviews

This action stays and/or defers federal sanctions and imposes no additional requirements.

Under Executive Order 12866 (58 FR 51735, October 4, 1993), this action is not a ''significant regulatory action'' and therefore is not subject to review by the Office of Management and Budget.

This action is not subject to Executive Order 13211, ''Actions Concerning Regulations That Significantly Affect Energy Supply, Distribution, or Use'' (66

FR 28355, May 22, 2001) because it is not a significant regulatory action.

The administrator certifies that this rule will not have a significant economic impact on a substantial number of small entities under the Regulatory Flexibility Act (5 U.S.C. 601 *et seq.*).

This rule does not contain any unfunded mandate or significantly or uniquely affect small governments, as described in the Unfunded Mandates Reform Act of 1995 (Pub. L. 104–4).

This rule does not have tribal implications because it will not have a substantial direct effect on one or more Indian tribes, on the relationship between the Federal government and Indian tribes, or on the distribution of power and responsibilities between the Federal government and Indian tribes, as specified by Executive Order 13175 (65 FR 67249, November 9, 2000).

This action does not have Federalism implications because it does not have substantial direct effects on the States, on the relationship between the national government and the States, or on the distribution of power and responsibilities among the various levels of government, as specified in Executive Order 13132 (64 FR 43255, August 10, 1999).

This rule is not subject to Executive Order 13045, ''Protection of Children from Environmental Health Risks and Safety Risks'' (62 FR 19885, April 23, 1997), because it is not economically significant.

The requirements of section 12(d) of the National Technology Transfer and Advancement Act of 1995 (15 U.S.C. 272) do not apply to this rule because it imposes no standards.

This rule does not impose an information collection burden under the provisions of the Paperwork Reduction Act of 1995 (44 U.S.C. 3501 *et seq.*).

The Congressional Review Act, 5 U.S.C. 801 *et seq.*, as added by the Small Business Regulatory Enforcement Fairness Act of 1996, generally provides that before a rule may take effect, the agency promulgating the rule must submit a rule report to Congress and the Comptroller General. However, section 808 provides that any rule for which the issuing agency for good cause finds that notice and public procedure thereon are impracticable, unnecessary, or contrary to the public interest, shall take effect at such time as the agency promulgating the rule determines. 5 U.S.C. 808(2). EPA has made such a good cause finding, including the reasons therefor, and established an effective date of February 26, 2003. EPA will submit a report containing this rule and other required information to the U.S. Senate, the U.S. House of Representatives, and the Comptroller General of the United States prior to publication of the rule in the **Federal Register.** A major rule cannot take effect until 60 days after it is published in the **Federal Register.** This rule is not a ''major rule'' as defined by 5 U.S.C. 804(2).

Under section 307(b)(1) of the CAA, petitions for judicial review of this action must be filed in the United States Court of Appeals for the appropriate circuit by April 28, 2003. Filing a petition for reconsideration by the Administrator of this final rule does not affect the finality of this rule for the purpose of judicial review nor does it extend the time within which petition for judicial review may be filed, and shall not postpone the effectiveness of such rule or action. This action may not be challenged later in proceedings to enforce its requirements. (*See* section 307(b)(2).)

List of Subjects in 40 CFR Part 52

Environmental protection, Air pollution control, Intergovernmental regulations, Particulate matter, Reporting and recordkeeping requirements.

Dated: February 3, 2003.

Alexis Strauss,

Acting Regional Administrator, Region IX.

[FR Doc. 03–4378 Filed 2–25–03; 8:45 am]

BILLING CODE 6560–50–P

ENVIRONMENTAL PROTECTION AGENCY

40 CFR Part 52

[CA273–0381a; FRL–7452–3]

Revisions to the California State Implementation Plan, Imperial County Air Pollution Control District

AGENCY: Environmental Protection Agency (EPA).

ACTION: Direct final rule.

SUMMARY: EPA is taking direct final action to approve a revision to the Imperial County Air Pollution Control District (ICAPCD) portion of the California State Implementation Plan (SIP). The revision concerns a rule controlling particulate matter (PM) emissions from livestock feed yard operations. We are approving a local rule that regulates these emission sources under the Clean Air Act as amended in 1990 (CAA or the Act).

DATES: This rule is effective on April 28, 2003 without further notice, unless EPA receives adverse comments by March 28, 2003. If we receive such comment, we will publish a timely withdrawal in the **Federal Register** to notify the public that this rule will not take effect.

ADDRESSES: Mail comments to Andy Steckel, Rulemaking Office Chief (AIR–4), U.S. Environmental Protection Agency, Region IX, 75 Hawthorne Street, San Francisco, CA 94105–3901.

You can inspect copies of the submitted SIP revisions and EPA's technical support documents (TSDs) at our Region IX office during normal business hours. You may also see copies of the submitted SIP revisions at the following locations: Environmental Protection Agency, Air Docket (6102), Ariel Rios Building, 1200 Pennsylvania Avenue, NW, Washington DC 20460; California Air Resources Board, Stationary Source Division, Rule Evaluation Section, 1001 ''I'' Street, Sacramento, CA 95814; and, Imperial County Air Pollution Control District, 150 South 9th Street, El Centro, CA 92243.

FOR FURTHER INFORMATION CONTACT: Jerald S. Wamsley, Rulemaking Office (AIR–4), U.S. Environmental Protection Agency, Region IX, (415) 947–4111.

SUPPLEMENTARY INFORMATION: Throughout this document, ''we,'' ''us'' and ''our'' refer to EPA.

Table of Contents

I. The State's Submittal
A. What rule did the State submit?
B. Are there other versions of this rule?
C. What is the purpose of the submitted rule revisions?
II. EPA's Evaluation and Action
A. How is EPA evaluating the rule?
B. Does the rule meet the evaluation criteria?
C. EPA recommendations to further improve the rule.
D. Public comment and final action.
III. Background Information
Why was this rule submitted?
IV. Stationary and Executive Order Reviews.

I. The State's Submittal

A. What Rule Did the State Submit?

Table 1 lists the rules we are approving with the dates that they were adopted by the local air agencies and submitted by the California Air Resources Board (CARB).

TABLE 1.—SUBMITTED RULE

Local agency	Rule #	Rule title	Adopted	Submitted
ICAPCD	420	Livestock Feed Yards	08/13/02	10/16/02

EPA found this rule submittal met the completeness criteria in 40 CFR part 51, appendix V on December 3, 2002. These criteria must be met before formal EPA review may begin.

B. Are There Other Versions of These Rules?

There is a version of ICAPCD Rule 420 in the SIP. On July 11, 2001, EPA gave a limited approval of Rule 420 and adopted it into the SIP. Simultaneously, EPA gave a limited disapproval to Rule 420 (66 FR 36170). There have been no other submittals of Rule 420 prior to the one we are acting on today.

C. What Is the Purpose of the Submitted Rule Revisions?

ICAPCD Rule 420 is a rule designed to limit particulate matter (PM) emissions at livestock feedyard operations. The rule requires that feed yards limit their dust emissions using procedures to maintain soil moisture and remove manure. The TSD has more information about this rule. The following is EPA's evaluation and final action for this rule.

II. EPA's Evaluation and Action

A. How Is EPA Evaluating the Rule?

Generally, SIP rules must be enforceable (see section 110(a) of the Act), must meet Reasonably Available Control Measure (RACM) requirements for nonattainment areas (see section 189), and must not relax existing requirements (see sections 110(l) and 193). The ICAPCD regulates an PM nonattainment area (see 40 CFR part 81), so Rule 420 must fulfill RACM.

We used the following guidance and policy documents to define our specific enforceability and RACT requirements:

1. Portions of the proposed post-1987 ozone and carbon monoxide policy that concern RACT, 52 FR 45044, November 24, 1987.

2. ''Issues Relating to Cutpoints, Deficiencies, and Deviations; Clarification to Appendix D of November 24, 1987 **Federal Register** Notice,'' (Blue Book), notice of availability published in the May 25, 1988 **Federal Register.**

B. Does the Rule Meet the Evaluation Criteria?

EPA's July 2001 limited approval and disapproval identified the following deficiencies that must be remedied before we may grant full approval:

—The rule contains inappropriate Executive Officer discretion allowing for exceptions to compliance with rule's moisture content standard;

—the rule does not have a definition of ''rainy period''; and,

—the rule lacks a test method to determine compliance with the moisture content standard.

Consequently, ICAPCD's August 2002 amendments revised the exceptions and test methods portions of the rule. An annual limited exception is provided at D.1. for up to 60 days providing an alternative dust control plan complies with Rule 401—Opacity and Rule 407—Nuisance. At D.2. an exception to the maximum 40% soil moisture requirement is allowed during rainy period as defined in Rule 101—Definitions. The test methods for compliance were detailed and expanded to prescribe how manure moisture content should be determined.

As a result of these revisions, we believe Rule 420 is consistent with the relevant policy and guidance regarding enforceability and SIP relaxations. We are not reviewing the rule as a RACM measure, because Imperial County has yet to submit its moderate area PM plan for our review. Once we have received this PM plan and its supporting emissions inventory information, we will evaluate Rule 420 as a RACM in the context of this information. The TSD has more information on our rule evaluation.

C. EPA Recommendations to Further Improve the Rules

EPA has no suggested recommendations.

D. Public Comment and Final Action

As authorized in section 110(k)(3) of the Act, EPA is fully approving the submitted rule because we believe it fulfills all relevant requirements. We do not think anyone will object to this approval, so we are finalizing it without proposing it in advance. However, in the Proposed Rules section of this **Federal Register,** we are simultaneously proposing approval of the same submitted rule. If we receive adverse comments by March 28, 2003, we will publish a timely withdrawal in the **Federal Register** to notify the public that the direct final approval will not take effect and we will address the comments in a subsequent final action based on the proposal. If we do not receive timely adverse comments, the direct final approval will be effective without further notice on April 28, 2003. This action will incorporate Rule 420 into the federally enforceable SIP.

III. Background Information

Why Was This Rule Submitted?

Imperial County is an area designated nonattainment for PM–10 and is classified as a moderate nonattainment area. Section 189(a) of the CAA requires moderate PM–10 nonattainment areas to adopt reasonably available control measures (RACM), including reasonably available control technology (RACT) for stationary sources of PM–10. Table 2 lists some of the national milestones leading to the submittal of this local agency rule.

TABLE 2.—PM–10 NONATTAINMENT MILESTONES

Date	Event
March 3, 1978	EPA promulgated a list of total suspended particulate (TSP) nonattainment areas under the provisions of the 1977 Clean Air Act (1977 CAA), (43 FR 8964; 40 CFR 81).
July 1, 1987	EPA replaced the TSP standards with new PM standards applying only to PM up to 10 microns in diameter (PM–10). (52 FR 24672).

TABLE 2.—PM–10 NONATTAINMENT MILESTONES—Continued

Date	Event
November 15, 1990	Clean Air Act Amendments of 1990 were enacted. Pub. L. 101–549, 104 Stat. 2399, codified at 42 U.S.C. 7401–7671q. On the date of enactment of the 1990 CAA Amendments, PM–10 areas meeting the qualifications of section 107(d)(4)(B) of the Act were designated nonattainment by operation of law and classified pursuant to section 188(a).
December 10, 1993	Section 189(a)(1)(C) requires that PM–10 nonattainment areas implement all reasonably available control measures (RACM) by this date.

IV. Stationary and Executive Order Reviews

Under Executive Order 12866 (58 FR 51735, October 4, 1993), this action is not a ''significant regulatory action'' and therefore is not subject to review by the Office of Management and Budget. For this reason, this action is also not subject to Executive Order 13211, ''Actions Concerning Regulations That Significantly Affect Energy Supply, Distribution, or Use'' (66 FR 28355, May 22, 2001). This action merely approves state law as meeting Federal requirements and imposes no additional requirements beyond those imposed by state law. Accordingly, the Administrator certifies that this rule will not have a significant economic impact on a substantial number of small entities under the Regulatory Flexibility Act (5 U.S.C. 601 *et seq.*). Because this rule approves pre-existing requirements under state law and does not impose any additional enforceable duty beyond that required by state law, it does not contain any unfunded mandate or significantly or uniquely affect small governments, as described in the Unfunded Mandates Reform Act of 1995 (Pub. L. 104–4).

This rule also does not have tribal implications because it will not have a substantial direct effect on one or more Indian tribes, on the relationship between the Federal Government and Indian tribes, or on the distribution of power and responsibilities between the Federal Government and Indian tribes, as specified by Executive Order 13175 (65 FR 67249, November 9, 2000). This action also does not have Federalism implications because it does not have substantial direct effects on the States, on the relationship between the national government and the States, or on the distribution of power and responsibilities among the various levels of government, as specified in Executive Order 13132 (64 FR 43255, August 10, 1999). This action merely approves a state rule implementing a Federal standard, and does not alter the relationship or the distribution of power and responsibilities established in the Clean Air Act. This rule also is not subject to Executive Order 13045 ''Protection of Children from Environmental Health Risks and Safety Risks'' (62 FR 19885, April 23, 1997), because it is not economically significant.

In reviewing SIP submissions, EPA's role is to approve state choices, provided that they meet the criteria of the Clean Air Act. In this context, in the absence of a prior existing requirement for the State to use voluntary consensus standards (VCS), EPA has no authority to disapprove a SIP submission for failure to use VCS. It would thus be inconsistent with applicable law for EPA, when it reviews a SIP submission, to use VCS in place of a SIP submission that otherwise satisfies the provisions of the Clean Air Act. Thus, the requirements of section 12(d) of the National Technology Transfer and Advancement Act of 1995 (15 U.S.C. 272 note) do not apply. This rule does not impose an information collection burden under the provisions of the Paperwork Reduction Act of 1995 (44 U.S.C. 3501 *et seq.*).

The Congressional Review Act, 5 U.S.C. 801 *et seq.*, as added by the Small Business Regulatory Enforcement Fairness Act of 1996, generally provides that before a rule may take effect, the agency promulgating the rule must submit a rule report, which includes a copy of the rule, to each House of the Congress and to the Comptroller General of the United States. EPA will submit a report containing this rule and other required information to the U.S. Senate, the U.S. House of Representatives, and the Comptroller General of the United States prior to publication of the rule in the **Federal Register.** A major rule cannot take effect until 60 days after it is published in the **Federal Register.** This action is not a ''major rule'' as defined by 5 U.S.C. 804(2).

Under section 307(b)(1) of the Clean Air Act, petitions for judicial review of this action must be filed in the United States Court of Appeals for the appropriate circuit by April 28, 2003. Filing a petition for reconsideration by the Administrator of this final rule does not affect the finality of this rule for the purposes of judicial review nor does it extend the time within which a petition for judicial review may be filed, and shall not postpone the effectiveness of such rule or action. This action may not be challenged later in proceedings to enforce its requirements. (*See* section 307(b)(2).)

List of Subjects in 40 CFR Part 52

Environmental protection, Air pollution control, Incorporation by reference, Intergovernmental relations, Particulate matter, Reporting and recordkeeping requirements.

Dated: February 3, 2003.

Alexis Strauss,

Acting Regional Administrator, Region IX.

Part 52, Chapter I, Title 40 of the Code of Federal Regulations is amended as follows:

PART 52—[AMENDED]

1. The authority citation for part 52 continues to read as follows:

Authority: 42 U.S.C. 7401 *et seq.*

Subpart F—California

2. Section 52.220 is amended by adding paragraph (c)(302)(i)(A)(*3*), to read as follows:

§ 52.220 Identification of plan.

* * * * *

(c) * * *

(302) * * *

(i) * * *

(A) * * *

(*3*) Rule 420 adopted on November 11, 1985, and amended on August 13, 2002.

* * * * *

[FR Doc. 03–4376 Filed 2–25–03; 8:45 am]

BILLING CODE 6560–50–P

ENVIRONMENTAL PROTECTION AGENCY

40 CFR Part 52

[VA085/086/089/102/103–5046a; FRL–7455–7]

Approval and Promulgation of Air Quality Implementation Plans; Virginia; Reorganization of and Revisions to Administrative and General Conformity Provisions; Documents Incorporated by Reference; Recodification of Existing SIP Provisions; Correction

AGENCY: Environmental Protection Agency (EPA).

ACTION: Direct final rule; correcting amendment.

SUMMARY: This document corrects errors in the amendatory instructions of a final rule pertaining to the chart listing Virginia regulations which EPA has incorporated by reference into the Virginia SIP.

EFFECTIVE DATE: March 10, 2003.

FOR FURTHER INFORMATION CONTACT: Harold A. Frankford, (215) 814–2108 or by e-mail at *frankford.harold@epamail.epa.gov.*

SUPPLEMENTARY INFORMATION: Throughout this document wherever ''we,'' or ''our'' are used we mean EPA. On January 7, 2003 (68 FR 663), we published a final rulemaking action announcing corrections to the chart in 40 CFR 52.2020(c) summarizing the approved SIP rules. As stated 68 FR 663 at page 666, the intent of these amendatory instructions was to correct typographical errors by renumbering these entries with the correct regulatory citations. After reviewing the chart published on page 666, we have determined that this action provided an incomplete list of entries which EPA had intended to correct. In addition to those entries listed in 68 FR 663 at 666, EPA had intended to correct the following entries originally published on April 21, 2000 (65 FR 21315), as described below:

Federal Register page (65 FR)	Entry	Column title	Description of correction
21322	5–20–305	State Effective Date	Replace ''2/1/97'' with ''7/1/97''
21323	5–40–311	Title/Subject	Replace ''Dioxide'' with ''Oxides''
21342	5–91–20	State Effective Date	Replace ''1/1/98'' with ''1/24/97''
	5–91–20	Explanation [Former SIP Citation]	Revise the existing note regarding the term ''Northern Virginia program area''

In this document on page 667, an amendatory instruction (2.d.) inadvertently removed entries 5–9–150, 4–91–450 and 4–91–460 from this chart. Another amendatory instruction (2.f.) contained a typographical error to the citation identifying entry 4–40–450. As stated in 68 FR 663 at page 666, the intent of these amendatory instructions was not to remove these entries from the chart, but merely to correct typographical errors by renumbering these entries with the correct regulatory citations, as described below:

1. Replace entry ''4–40–450'' with ''5–40–450.''
2. Replace entry ''5–9–150'' with ''5–91–150.''
3. Replace entry ''4–91–450'' with ''5–91–450.''
4. Replace entry ''4–91–460'' with ''5–91–460.''

However, the rule chart published in the January 7, 2003 action omitted these new entries which were meant to replace these incorrect entries. This action corrects the chart in 40 CFR 52.2420(c) by removing the incorrect chart entries and adding the correct chart entries in their place.

Also, on page 667 amendatory instructions 2.e. and 2.g. were incorrect. As a result, the corrections as described on page 666 to entry 5–80–10 and the title for ''Chapter 160 General Conformity Rules'' were not made to the rule chart at page 668. This action provides the correct amendatory instructions.

Finally, this action corrects typographical errors published in the rule chart for 68 FR 663 at page 668 to the headings ''Chapter 10'' and ''Chapter 20'' and to the notes found in the respective ''Explanation [Former SIP Citation]'' columns for entries 5–10–10 and 5–10–20.

Section 553 of the Administrative Procedure Act, 5 U.S.C. 553(b)(B), provides that, when an agency for good cause finds that notice and public procedure are impracticable, unnecessary or contrary to the public interest, the agency may issue a rule without providing notice and an opportunity for public comment. We have determined that there is good cause for making today's rule final without prior proposal and opportunity for comment because we are merely correcting an incorrect citation in a previous action. Thus, notice and public procedure are unnecessary. We find that this constitutes good cause under 5 U.S.C. 553(b)(B).

Statutory and Executive Order Reviews

Under Executive Order (E.O.) 12866 (58 FR 51735, October 4, 1993), this action is not a ''significant regulatory action'' and is therefore not subject to review by the Office of Management and Budget. For this reason, this action is also not subject to Executive Order 13211, ''Actions Concerning Regulations That Significantly Affect Energy Supply, Distribution, or Use'' (66 FR 28355 (May 22, 2001)). Because the agency has made a ''good cause'' finding that this action is not subject to notice-and-comment requirements under the Administrative Procedures Act or any other statute as indicated in the **SUPPLEMENTARY INFORMATION** section above, it is not subject to the regulatory flexibility provisions of the Regulatory Flexibility Act (5 U.S.C. 601 *et seq.*), or to sections 202 and 205 of the Unfunded Mandates Reform Act of 1995 (UMRA) (Pub. L. 104–4). In addition, this action does not significantly or uniquely affect small governments or impose a significant intergovernmental mandate, as described in sections 203 and 204 of UMRA. This rule also does not have a substantial direct effect on one or more Indian tribes, on the relationship between the Federal Government and Indian tribes, or on the distribution of power and responsibilities between the Federal Government and Indian tribes, as specified by Executive Order 13175 (65 FR 67249, November 9, 2000), nor will it have substantial direct effects on the States, on the relationship between the national government and the States, or on the distribution of power and responsibilities among the various levels of governments, as specified by Executive Order 13132 (64 FR 43255, August 10, 1999). This rule also is not subject to Executive Order 13045 (62 FR 19885, April 23, 1997), because it is not economically significant.

This technical correction action does not involve technical standards; thus the requirements of section 12(d) of the National Technology Transfer and Advancement Act of 1995 (15 U.S.C. 272 *note*) do not apply. The rule also does not involve special consideration of environmental justice related issues as required by Executive Order 12898 (59 FR 7629, February 16, 1994). In issuing this rule, EPA has taken the necessary steps to eliminate drafting errors and ambiguity, minimize potential litigation, and provide a clear legal standard for affected conduct, as required by section 3 of Executive Order 12988 (61 FR 4729, February 7, 1996). EPA has complied with Executive Order 12630 (53 FR 8859, March 15, 1998) by examining the takings implications of the rule in accordance with the ''Attorney General's Supplemental Guidelines for the Evaluation of Risk and Avoidance of Unanticipated Takings'' issued under the executive order. This rule does not impose an

information collection burden under the Paperwork Reduction Act of 1995 (44 U.S.C. 3501 *et seq.*).

The Congressional Review Act (5 U.S.C. 801 *et seq.*), as added by the Small Business Regulatory Enforcement Fairness Act of 1996, generally provides that before a rule may take effect, the agency promulgating the rule must submit a rule report, which includes a copy of the rule, to each House of the Congress and to the Comptroller General of the United States. Section 808 allows the issuing agency to make a rule effective sooner than otherwise provided by the CRA if the agency makes a good cause finding that notice and public procedure is impracticable, unnecessary or contrary to the public interest. This determination must be supported by a brief statement. 5 U.S.C. 808(2). As stated previously, EPA had made such a good cause finding, including the reasons therefore, and established an effective date of March 10, 2003. EPA will submit a report containing this rule and other required information to the U.S. Senate, the U.S. House of Representatives, and the Comptroller General of the United States prior to publication of the rule in the **Federal Register.** This correction to 40 CFR 52.2420(c) for Virginia is not a ''major rule'' as defined by 5 U.S.C. 804(2).

List of Subjects in 40 CFR Part 52

Environmental protection, Air pollution control, Intergovernmental relations, Nitrogen dioxide, Ozone, Volatile organic compounds.

Dated: February 14, 2003.

Donald S. Welsh,

Regional Administrator, EPA Region III.

40 CFR part 52 is amended as follows:

PART 52—[AMENDED]

1. The authority citation for part 52 continues to read as follows:

Authority: 42 U.S.C. 7401 *et seq.*

Subpart VV—Virginia

2. In § 52.2420, the table in paragraph (c) is amended:

a. Under Chapter 10 by revising the ''Chapter 10'' heading and entries 5–10–10 and 5–10–20.

b. Under Chapter 20 by revising the ''Chapter 20'' heading and entry 5–20–205.

c. Under Chapter 40 by removing entry 4–40–450, adding entry 5–40–450, and revising entry 5–40–311.

d. Under Chapter 80 by removing entry 5–80–10/Article 6 and adding entry 5–80–10.

e. Under Chapter 91 by removing entries 5–9–150, 4–91–450, and 4–91–460; adding entries 5–91–150, 5–91–450, and 5–91–460; and revising entry 5–91–20.

f. Under chapter 160 by revising the ''Chapter 160'' heading.

The revisions read as follows:

§ 52.2420 Identification of plan.

* * * * *

(c) * * *

EPA-APPROVED VIRGINIA REGULATIONS

State citation (9 VAC 5)	Title/Subject	State effective date	EPA approval date	Explanation [former SIP citation]
Chapter 10—General Definitions—[Part I]				
5–10–10	General	1/1/98	1/7/03, 68 FR	120–01–01 Sections 5–10–10A, B and C are revised.
5–10–20	Terms Defined—	1/1/98	2/26/03 and FR page citation	Terms Added—Public hearing; Regulations for the Control and Abatement of Air Pollution, Regulation of the Board, These regulations: Terms Revised—Good Engineering Practice, Person, Volatile organic compound: Terms Deleted (moved to 9 VAC 5–170–20)—Administrative Process Act, Air quality maintenance area, Confidential information, Consent agreement, Consent order, Emergency special order, Order, Special order, Variance.
*	*	*	*	* * *
Chapter 20—General Provisions—[Part II]				
*	*	*	*	* * *
5–20–205	Prevention of Significant Deterioration Areas.	7/1/97	3/23/98, 63 FR 13795	Former Appendix L—Effective 2/1/92.

EPA-APPROVED VIRGINIA REGULATIONS—Continued

State citation (9 VAC 5)	Title/Subject	State effective date	EPA approval date	Explanation [former SIP citation]
*	*	*	*	*
Chapter 40—Existing Stationary Sources—[Part IV]				
*	*	*	*	*
Part II—Emission Standards				
*	*	*	*	*
Article 4—General Process Operations—[Rule 4–4]				
*	*	*	*	*
5–40–311	Reasonably available control technology guidelines for stationary sources of nitrogen oxides.	7/1/97	4/28/99, 64 FR 22792	52.2420(c)(132) Exceptions: 311C.3.a, C.3.c,D.
*	*	*	*	*
Article 5—Synthesized Pharmaceutical Products Manufacturing Operations—[Rule 4–5]				
*	*	*	*	*
5–40–450	Standard for Volatile Organic Compounds.	4/17/95	4/21/00, 65 FR 21320	120–04–0503
*	*	*	*	*
Chapter 80—Permits for Stationary Sources				
5–80–10	New and Modified Stationary Sources.	4/17/95	4/21/00, 65 FR 21320	120–08–01
*	*	*	*	*
Chapter 91—Regulations for the Control of Motor Vehicle Emissions in the Northern Virginia Area				
Part I—Definitions				
*	*	*	*	*
5–91–20	Terms Defined	1/24/97	9/1/99, 64 FR 47670	Note: The term ''Northern Virginia program area'' is revised, effective 1/1/98, to exclude Fauquier County.
Part II—General Provisions				
*	*	*	*	*
5–91–150	Availability of Information	1/24/97	9/1/99, 64 FR 47670	
*	*	*	*	*
Part VI—Inspection Procedures				
*	*	*	*	*
5–91–450	Fuel test evaporative pressure test and gas cap pressure and test procedure.	1/24/97	9/1/99, 64 FR 47670	
5–91–460	Fuel system evaporative purge test procedure.	1/24/97	9/1/99, 64 FR 47670	
*	*	*	*	*
Chapter 160—General Conformity Rules				
*	*	*	*	*

[FR Doc. 03–4520 Filed 2–25–03; 8:45 am]
BILLING CODE 6560–50–P

ENVIRONMENTAL PROTECTION AGENCY

40 CFR Part 52

[KS 173–1173a; FRL–7455–9]

Approval and Promulgation of Implementation Plans; State of Kansas

AGENCY: Environmental Protection Agency (EPA).

ACTION: Direct final rule.

SUMMARY: EPA is taking final action to approve a State Implementation Plan (SIP) revision submitted by the state of Kansas. This revision is a new regulation entitled ''Prevention of Significant Deterioration of Air Quality'' (PSD) and will replace the existing state PSD regulation. This rule was last adopted as a state rule in 1990; therefore, this revision adopts by reference Federal PSD regulations, as in effect on July 1, 2000. The effect of this approval is to ensure Federal enforceability of the state air program rules and to maintain consistency between the state-adopted rules and the approved SIP.

DATES: This direct final rule will be effective April 28, 2003, unless EPA receives adverse comments by March 28, 2003. If adverse comments are received, EPA will publish a timely withdrawal of the direct final rule in the **Federal Register** informing the public that the rule will not take effect.

ADDRESSES: Comments may be mailed to Heather Hamilton, Environmental Protection Agency, Air Planning and Development Branch, 901 North 5th Street, Kansas City, Kansas 66101.

Copies of documents relative to this action are available for public inspection during normal business hours at the above-listed Region 7 location. The interested persons wanting to examine these documents should make an appointment with the office at least 24 hours in advance.

FOR FURTHER INFORMATION CONTACT: Heather Hamilton at (913) 551–7039.

SUPPLEMENTARY INFORMATION: Throughout this document whenever ''we,'' ''us,'' or ''our'' is used, we mean EPA. This section provides additional information by addressing the following questions:

What is a SIP?
What is the Federal approval process for a SIP?
What does Federal approval of a state regulation mean to me?
What is being addressed in this document?
Have the requirements for approval of a SIP revision been met?
What action is EPA taking?

What Is a SIP?

Section 110 of the Clean Air Act (CAA) requires States to develop air pollution regulations and control strategies to ensure that State air quality meets the national ambient air quality standards established by EPA. These ambient standards are established under section 109 of the CAA, and they currently address six criteria pollutants. These pollutants are: carbon monoxide, nitrogen dioxide, ozone, lead, particulate matter, and sulfur dioxide.

Each State must submit these regulations and control strategies to us for approval and incorporation into the Federally-enforceable SIP.

Each Federally-approved SIP protects air quality primarily by addressing air pollution at its point of origin. These SIPs can be extensive, containing state regulations or other enforceable documents and supporting information such as emission inventories, monitoring networks, and modeling demonstrations.

What Is the Federal Approval Process for a SIP?

In order for State regulations to be incorporated into the Federally-enforceable SIP, States must formally adopt the regulations and control strategies consistent with State and Federal requirements. This process generally includes a public notice, public hearing, public comment period, and a formal adoption by a State-authorized rulemaking body.

Once a State rule, regulation, or control strategy is adopted, the State submits it to us for inclusion into the SIP. We must provide public notice and seek additional public comment regarding the proposed Federal action on the State submission. If adverse comments are received, they must be addressed prior to any final Federal action by us.

All State regulations and supporting information approved by EPA under section 110 of the CAA are incorporated into the Federally-approved SIP. Records of such SIP actions are maintained in the Code of Federal Regulations (CFR) at title 40, part 52, entitled ''Approval and Promulgation of Implementation Plans.'' The actual State regulations which are approved are not reproduced in their entirety in the CFR outright but are ''incorporated by reference,'' which means that we have approved a given State regulation with a specific effective date.

What Does Federal Approval of a State Regulation Mean to Me?

Enforcement of the State regulation before and after it is incorporated into the Federally-approved SIP is primarily a state responsibility. However, after the regulation is Federally approved, we are authorized to take enforcement action against violators. Citizens are also offered legal recourse to address violations as described in section 304 of the CAA.

What Is Being Addressed in This Document?

This action approves the adoption of State rule K.A.R. 28–19–350, Prevention of Significant Deterioration of Air Quality, and approves the recission of the existing rule sections K.A.R. 28–19–17a through 28–19–17q which comprised the prior body of Kansas' Prevention of Significant Deterioration of Air Quality regulations. K.A.R. 28–19–17 is being revised in order to provide a cross-reference to the new regulations. This revision adopts by reference 40 CFR 52.21, as in effect on July 1, 2000, with the exceptions of 52.21(a); 52.21(f) through (h); 52.21(m)(l)(v); 52.21(q); 52.21(s) through (u); and 52.21(w).

The proposed changes to the State Prevention of Significant Deterioration (PSD) program clarify that the following Federal changes have been adopted by the Kansas PSD Program: (1) Adoption of the PM10 (particulate matter with a nominal aerodynamic diameter of 10 micrometers or less) increment; (2) adoption of provisions regarding calculating actual emissions for electric utility steam generating units; (3) adoption of provisions relating to clean coal technology; (4) adoption of provisions relating to pollution control projects at existing electric utility steam generating units; (5) adoption of the significance level for non-methane organic compounds at municipal solid waste landfills; and (6) adoption of the significance levels for organics, metals and acid gases from municipal waste combustors. This action also allows the opportunity to renumber the PSD rules to further the ongoing renumbering of the Kansas Air Quality Regulations.

This regulation was adopted by the Kansas Department of Health and Environment on October 30, 2002, and became effective on November 22, 2002.

Have the Requirements for Approval of a SIP Revision Been Met?

The state submittal has met the public notice requirements for SIP submissions in accordance with 40 CFR 51.102. The submittal also satisfied the

completeness criteria of 40 CFR part 51, appendix V. In addition, as explained above and in more detail in the technical support document which is part of this document, the revision meets the substantive SIP requirements of the CAA, including section 110 and implementing regulations.

What Action Is EPA Taking?

EPA is approving as a revision to the Kansas SIP rule K.A.R. 28–19–350, Prevention of Significant Deterioration of Air Quality; the recission of existing K.A.R. 28–19–17a through 28–19–17q which comprised the prior body of Kansas' Prevention of Significant Deterioration of Air Quality regulations, and the revision to K.A.R. 28–19–17 which provides a cross-reference to the new regulations. These revisions were adopted by the State on October 30, 2002, and became effective on November 22, 2002. These revisions were submitted on December 10, 2002.

We are processing this action as a final action because it adds noncontroversial regulations to the SIP. We do not anticipate any adverse comments. Please note that if EPA receives adverse comment on part of this rule and if that part can be severed from the remainder of the rule, EPA may adopt as final those parts of the rule that are not the subject of an adverse comment.

Statutory and Executive Order Reviews

Under Executive Order 12866 (58 FR 51735, October 4, 1993), this action is not a ''significant regulatory action'' and therefore is not subject to review by the Office of Management and Budget. For this reason, this action is also not subject to Executive Order 13211, ''Actions Concerning Regulations That Significantly Affect Energy Supply, Distribution, or Use'' (66 FR 28355, May 22, 2001). This action merely approves State law as meeting Federal requirements and imposes no additional requirements beyond those imposed by State law. Accordingly, the Administrator certifies that this rule will not have a significant economic impact on a substantial number of small entities under the Regulatory Flexibility Act (5 U.S.C. 601 *et seq.*). Because this rule approves pre-existing requirements under State law and does not impose any additional enforceable duty beyond that required by State law, it does not contain any unfunded mandate or significantly or uniquely affect small governments, as described in the Unfunded Mandates Reform Act of 1995 (Pub. L. 104–4).

This rule also does not have tribal implications because it will not have a substantial direct effect on one or more Indian tribes, on the relationship between the Federal government and Indian tribes, or on the distribution of power and responsibilities between the Federal government and Indian tribes, as specified by Executive Order 13175 (65 FR 67249, November 9, 2000). This action also does not have federalism implications because it does not have substantial direct effects on the States, on the relationship between the national government and the States, or on the distribution of power and responsibilities among the various levels of government, as specified in Executive Order 13132 (64 FR 43255, August 10, 1999). This action merely approves a state rule implementing a Federal standard, and does not alter the relationship or the distribution of power and responsibilities established in the CAA. This rule also is not subject to Executive Order 13045, ''Protection of Children from Environmental Health Risks and Safety Risks'' (62 FR 19885, April 23, 1997), because it is not economically significant.

In reviewing SIP submissions, EPA's role is to approve state choices, provided that they meet the criteria of the CAA. In this context, in the absence of a prior existing requirement for the State to use voluntary consensus standards (VCS), EPA has no authority to disapprove a SIP submission for failure to use VCS. It would thus be inconsistent with applicable law for EPA, when it reviews a SIP submission, to use VCS in place of a SIP submission that otherwise satisfies the provisions of the CAA. Thus, the requirements of section 12(d) of the National Technology Transfer and Advancement Act of 1995 (15 U.S.C. 272 note) do not apply. This rule does not impose an information collection burden under the provisions of the Paperwork Reduction Act of 1995 (44 U.S.C. 3501 *et seq.*).

The Congressional Review Act, 5 U.S.C. 801 *et seq.*, as added by the Small Business Regulatory Enforcement Fairness Act of 1996, generally provides that before a rule may take effect, the agency promulgating the rule must submit a rule report, which includes a copy of the rule, to each House of the Congress and to the Comptroller General of the United States. EPA will submit a report containing this rule and other required information to the U.S. Senate, the U.S. House of Representatives, and the Comptroller General of the United States prior to publication of the rule in the **Federal Register.** A major rule cannot take effect until 60 days after it is published in the **Federal Register.** This action is not a ''major rule'' as defined by 5 U.S.C. 804(2).

Under section 307(b)(1) of the CAA, petitions for judicial review of this action must be filed in the United States Court of Appeals for the appropriate circuit by April 28, 2003. Filing a petition for reconsideration by the Administrator of this final rule does not affect the finality of this rule for the purposes of judicial review nor does it extend the time within which a petition for judicial review may be filed, and shall not postpone the effectiveness of such rule or action. This action may not be challenged later in proceedings to enforce its requirements. (*See* section 307(b)(2).)

List of Subjects in 40 CFR Part 52

Environmental protection, Air pollution control, Carbon monoxide, Incorporation by reference, Intergovernmental relations, Lead, Nitrogen dioxide, Ozone, Particulate matter, Reporting and recordkeeping requirements, Sulfur oxides, Volatile organic compounds.

Dated: February 20, 2003.

James B. Gulliford,

Regional Administrator, Region 7.

Chapter I, title 40 of the Code of Federal Regulations is amended as follows:

PART 52—[AMENDED]

1. The authority citation for part 52 continues to read as follows:

Authority: 42 U.S.C. 7401 *et seq.*

Subpart R—Kansas

2. In § 52.870 the table in paragraph (c) is amended:

a. Under the heading for ''Attainment Area Requirements'' by revising K.A.R. 28–19–17;

b. Under the heading for ''Attainment Area Requirements'' by removing the entries for K.A.R. 28–19–17a through K.A.R. 28–19–17q;

c. Under the heading for ''Construction Permits and Approvals'' by adding in numerical order an entry for K.A.R. 28–19–350.

The revision and addition read as follows:

§ 52.870 Identification of plan.

* * * * *

(c) * * *

EPA–APPROVED KANSAS REGULATIONS

Kansas citation	Title	State effective date	EPA approval date	Comments
Kansas Department of Health and Environment Ambient Air Quality Standards and Air Pollution Control				
*	*	*	*	*
Attainment Area Requirements				
K.A.R. 28–19–17	Prevention of Significant Deterioration of Air Quality.	11/22/02	2/26/03 and FR page citation.	K.A.R. 28–19–17a through 28–19–17q revoked. Provision moved to K.A.R. 28–19–350.
*	*	*	*	*
Construction Permits and Approvals				
*	*	*	*	*
K.A.R. 28–19–350	Prevention of Significant Deterioration of Air Quality.	11/22/02	2/26/03 and FR page citation.	
*	*	*	*	*

* * * * *

[FR Doc. 03–4626 Filed 2–25–03; 8:45 am]

BILLING CODE 6560–50–P

ENVIRONMENTAL PROTECTION AGENCY

40 CFR Part 180

[OPP–2003–0039; FRL–7291–7]

Pesticides; Tolerance Exemptions for Polymers

AGENCY: Environmental Protection Agency (EPA).

ACTION: Direct final rule.

SUMMARY: EPA is taking direct final rule action to shift certain polymeric substances from one section of the Code of Federal Regulations (CFR) to the section of CFR which lists the pesticide chemicals that are exempt from the requirement of a tolerance because they have been determined to meet the criteria identifying polymers that are of low risk.

DATES: This direct final rule is effective on May 27, 2003, without further notice, unless EPA receives a relevant adverse comment by March 28, 2003. If EPA receives a relevant adverse comment, EPA will publish a timely withdrawal in the **Federal Register** informing the public that this direct final rule will not take effect.

FOR FURTHER INFORMATION CONTACT: Kathryn Boyle, Registration Division (7505C), Office of Pesticide Programs, Environmental Protection Agency, 1200 Pennsylvania Ave., NW., Washington, DC 20460–0001; telephone number: 703–305–6304; fax number: 703–305–0599; e-mail address: boyle.kathryn@epa.gov.

SUPPLEMENTARY INFORMATION:

I. General Information

A. Does this Action Apply to Me?

You may be affected by this action if you are an agricultural producer, food manufacturer, or pesticide manufacturer. Potentially affected categories and entities may include, but are not limited to:

- Crop production (NAICS code 111)
- Animal production (NAICS code 112)
- Food manufacturing (NAICS code 311)
- Pesticide manufacturing (NAICS code 32532)
- Antimicrobial Pesticide (NAICS code 32561)

This listing is not intended to be exhaustive, but rather provides a guide for readers regarding entities likely to be affected by this action. Other types of entities not listed in this unit could also be affected. The North American Industrial Classification System (NAICS) codes have been provided to assist you and others in determining whether this action might apply to certain entities. If you have any questions regarding the applicability of this action to a particular entity, consult the person listed under **FOR FURTHER INFORMATION CONTACT**.

B. How Can I Get Copies Of This Document and Other Related Information?

1. *Docket.* EPA has established an official public docket for this action under docket identification (ID) number OPP–2003–0039. The official public docket consists of the documents specifically referenced in this action, any public comments received, and other information related to this action. Although a part of the official docket, the public docket does not include Confidential Business Information (CBI) or other information whose disclosure is restricted by statute. The official public docket is the collection of materials that is available for public viewing at the Public Information and Records Integrity Branch (PIRIB), Rm. 119, Crystal Mall #2, 1921 Jefferson Davis Hwy., Arlington, VA. This docket facility is open from 8:30 a.m. to 4 p.m., Monday through Friday, excluding legal holidays. The docket telephone number is (703) 305–5805.

2. *Electronic Access.* You may access this **Federal Register** document electronically through the EPA Internet under the ''**Federal Register**'' listings at http://www.epa.gov/fedrgstr/. A frequently updated electronic version of 40 CFR part 180 is available at http://www.access.gpo.gov/nara/cfr/cfrhtml_00/Title_40/40cfr180_00.html, a beta site currently under development.

An electronic version of the public docket is available through EPA's electronic public docket and comment system, EPA Dockets. You may use EPA Dockets at http://www.epa.gov/edocket/

to view public comments, access the index listing of the contents of the official public docket, and to access those documents in the public docket that are available electronically. Although not all docket materials may be available electronically, you may still access any of the publicly available docket materials through the docket facility identified in Unit I.B.1. Once in the system, select ''search,'' then key in the appropriate docket ID number.

Certain types of information will not be placed in the EPA Dockets. Information claimed as CBI and other information whose disclosure is restricted by statute, which is not included in the official public docket, will not be available for public viewing in EPA's electronic public docket. EPA's policy is that copyrighted material will not be placed in EPA's electronic public docket but will be available only in printed, paper form in the official public docket. To the extent feasible, publicly available docket materials will be made available in EPA's electronic public docket. When a document is selected from the index list in EPA Dockets, the system will identify whether the document is available for viewing in EPA's electronic public docket. Although not all docket materials may be available electronically, you may still access any of the publicly available docket materials through the docket facility identified in Unit I.B. EPA intends to work towards providing electronic access to all of the publicly available docket materials through EPA's electronic public docket.

For public commenters, it is important to note that EPA's policy is that public comments, whether submitted electronically or in paper, will be made available for public viewing in EPA's electronic public docket as EPA receives them and without change, unless the comment contains copyrighted material, CBI, or other information whose disclosure is restricted by statute. When EPA identifies a comment containing copyrighted material, EPA will provide a reference to that material in the version of the comment that is placed in EPA's electronic public docket. The entire printed comment, including the copyrighted material, will be available in the public docket.

Public comments submitted on computer disks that are mailed or delivered to the docket will be transferred to EPA's electronic public docket. Public comments that are mailed or delivered to the Docket will be scanned and placed in EPA's electronic public docket. Where practical, physical objects will be photographed, and the photograph will be placed in EPA's electronic public docket along with a brief description written by the docket staff.

C. How and To Whom Do I Submit Comments?

You may submit comments electronically, by mail, or through hand delivery/courier. To ensure proper receipt by EPA, identify the appropriate docket identification number in the subject line on the first page of your comment. Please ensure that your comments are submitted within the specified comment period. Comments received after the close of the comment period will be marked ''late.'' EPA is not required to consider these late comments. If you wish to submit CBI or information that is otherwise protected by statute, please follow the instructions in Unit I.D. Do not use EPA Dockets or e-mail to submit CBI or information protected by statute.

1. *Electronically*. If you submit an electronic comment as prescribed below, EPA recommends that you include your name, mailing address, and an e-mail address or other contact information in the body of your comment. Also include this contact information on the outside of any disk or CD ROM you submit, and in any cover letter accompanying the disk or CD ROM. This ensures that you can be identified as the submitter of the comment and allows EPA to contact you in case EPA cannot read your comment due to technical difficulties or needs further information on the substance of your comment. EPA's policy is that EPA will not edit your comment, and any identifying or contact information provided in the body of a comment will be included as part of the comment that is placed in the official public docket, and made available in EPA's electronic public docket. If EPA cannot read your comment due to technical difficulties and cannot contact you for clarification, EPA may not be able to consider your comment.

i. *EPA Dockets*. Your use of EPA's electronic public docket to submit comments to EPA electronically is EPA's preferred method for receiving comments. Go directly to EPA Dockets at http://www.epa.gov/edocket, and follow the online instructions for submitting comments. Once in the system, select ''search,'' and then key in Docket ID No. OPP–2003–0039. The system is an ''anonymous access'' system, which means EPA will not know your identity, e-mail address, or other contact information unless you provide it in the body of your comment.

ii. *E-mail*. Comments may be sent by electronic mail (e-mail) to opp-docket@epa.gov, Attention Docket ID No. OPP–2003–0039. In contrast to EPA's electronic public docket, EPA's e-mail system is not an ''anonymous access'' system. If you send an e-mail comment directly to the Docket without going through EPA's electronic public docket, EPA's e-mail system automatically captures your e-mail address. E-mail addresses that are automatically captured by EPA's e-mail system are included as part of the comment that is placed in the official public docket, and made available in EPA's electronic public docket.

iii. *Disk or CD ROM*. You may submit comments on a disk or CD ROM that you mail to the mailing address identified in Unit I.C.2. These electronic submissions will be accepted in WordPerfect or ASCII file format. Avoid the use of special characters and any form of encryption.

2. *By Mail*. Send your comments to: Public Information and Records Integrity Branch (PIRIB), Office of Pesticide Programs (OPP), Environmental Protection Agency, Mailcode: 7502C, 1200 Pennsylvania Ave., NW, Washington, DC, 20460, Attention Docket ID No. OPP–2003–0039.

3. *By Hand Delivery or Courier*. Deliver your comments to: Public Information and Records Integrity Branch (PIRIB), Office of Pesticide Programs (OPP), Environmental Protection Agency, Rm. 119, Crystal Mall #2, 1921 Jefferson Davis Highway, Arlington, VA., Attention Docket ID No. OPP–2003–0039. Such deliveries are only accepted during the Docket's normal hours of operation as identified in Unit I.A.1.

D. How Should I Submit CBI To the Agency?

Do not submit information that you consider to be CBI electronically through EPA's electronic public docket or by e-mail. You may claim information that you submit to EPA as CBI by marking any part or all of that information as CBI (if you submit CBI on disk or CD ROM, mark the outside of the disk or CD ROM as CBI and then identify electronically within the disk or CD ROM the specific information that is CBI). Information so marked will not be disclosed except in accordance with procedures set forth in 40 CFR part 2.

In addition to one complete version of the comment that includes any information claimed as CBI, a copy of the comment that does not contain the information claimed as CBI must be submitted for inclusion in the public

docket and EPA's electronic public docket. If you submit the copy that does not contain CBI on disk or CD ROM, mark the outside of the disk or CD ROM clearly that it does not contain CBI. Information not marked as CBI will be included in the public docket and EPA's electronic public docket without prior notice. If you have any questions about CBI or the procedures for claiming CBI, please consult the person identified in the **FOR FURTHER INFORMATION CONTACT** section.

II. Authority

A. What is the Agency's Authority for Taking this Action?

This direct final rule is issued pursuant to section 408(e) of FFDCA, as amended by the FQPA (21 U.S.C. 346a(e)). Section 408 of FFDCA authorizes the establishment of tolerances, exemptions from the requirement of a tolerance, modifications in tolerances, and revocation of tolerances for residues of pesticide chemicals in or on raw agricultural commodities and processed foods. Without a tolerance or tolerance exemption, food containing pesticide residues is considered to be unsafe and therefore ''adulterated'' under section 402(a) of the FFDCA. If food containing pesticide residues is found to be adulterated, the food may not be distributed in interstate commerce (21 U.S.C. 331(a) and 342(a)).

B. Why is EPA Issuing this as a Direct Final Rule?

EPA is issuing this action as a direct final rule without prior proposal because the Agency believes that this action is not controversial and is not likely to result in any adverse comments, inasmuch as this action simply shifts existing tolerance exemptions to a new section in 40 CFR part 180. It will not alter the quantity or nature of residues that might lawfully be present in food or feed.

This rule is effective on May 27, 2003 without further notice, unless EPA receives adverse comment by March 28, 2003. If, however, EPA receives a relevant adverse comment during the comment period, then EPA will publish a timely withdrawal in the **Federal Register** informing the public that the rule will not take effect. EPA will also publish a notice of proposed rulemaking in a future edition of the **Federal Register**. EPA will address the comments on the direct final rule as part of that proposed rulemaking.

III. What Action is the Agency Taking?

In the **Federal Register** of May 24, 2002, (67 FR 36525) (FRL–6834–2) the Agency published a direct final rule establishing a new section 40 CFR 180.960 to contain exemptions from the requirement of a tolerance for polymers that under reasonably foreseeable circumstances will pose no appreciable risks to human health.

The Agency is now shifting to 40 CFR 180.960 those existing tolerance exemptions for certain polymers that have previously been determined to meet the criteria of a low risk polymer. All of these polymers can be used as an inert ingredient in any pesticide product including antimicrobial pesticide products providing that such use is in accordance with good agricultural or manufacturing practices. As part of this shifting of tolerance exemptions from one part of the CFR to another, the Agency has combined as appropriate two or more chemical names under a single name and has eliminated duplicative entries.

IV. Statutory and Executive Order Reviews

This direct final rule merely reorganizes existing exemptions in 40 CFR part 180, shifting them from one section to another within the same part. The Agency is acting on its own initiative under FFDCA section 408(e) in shifting these existing tolerance exemptions to a new section of part 180. This direct final rule has no substantive effect, and is not expected to have any adverse impact, or otherwise impose any new requirements. As such, this action is not a ''significant regulatory action'' subject to review by the Office of Management and Budget (OMB), under Executive Order 12866, entitled *Regulatory Planning and Review* (58 FR 51735, October 4, 1993).

This direct final rule does not contain any information collections subject to OMB approval under the Paperwork Reduction Act (PRA), 44 U.S.C. 3501 et seq.

Under section 605(b) of the Regulatory Flexibility Act (RFA) (5 U.S.C. 601 et.seq.), the Agency hereby certifies that this action will not have a significant economic impact on a substantial number of small entities. As noted above, this action will have no substantive or procedural effect on the tolerance exemptions affected, and therefore, will not adversely impact small entities. However, by grouping tolerance exemptions for polymers that have been determined to be low risk in one location in the CFR, this action will make it easier for small entities to efficiently use EPA's tolerance regulations.

Since this direct final rule simply shifts existing tolerance exemptions within part 180 without imposing any requirements, it does not impose any enforceable duty or contain any unfunded mandate as described under Title II of the Unfunded Mandates Reform Act of 1995 (UMRA) (Public Law 104–4).

In addition, this action will not have a substantial direct effect on States, on the relationship between the national government and the States, or on the distribution of power and responsibilities among the various levels of government, as specified in Executive Order 13132, entitled *Federalism* (64 FR 43255, August 10, 1999). This direct final rule directly regulates growers, food processors, food handlers and food retailers, not States. This action does not alter the relationships or distribution of power and responsibilities established by Congress in the preemption provisions of FFDCA section 408(n)(4).

For these same reasons, this direct final rule does not have any ''tribal implications'' as described in Executive Order 13175, entitled *Consultation and Coordination with Indian Tribal Governments* (65 FR 67249, November 6, 2000). This rule will not have substantial direct effects on tribal governments, on the relationship between the Federal government and Indian tribes, or on the distribution of power and responsibilities between the Federal government and Indian tribes, as specified in Executive Order 13175. Thus, Executive Order 13175 does not apply to this rule.

Since this direct final rule is not a ''significant regulatory action'' as defined by Executive Order 12866, it does not require OMB review or any Agency action under Executive Order 13045, entitled *Protection of Children from Environmental Health Risks and Safety Risks* (62 FR 19885, April 23, 1997), and is not subject to Executive Order 13211, *Actions Concerning Regulations That Significantly Affect Energy Supply, Distribution, or Use* (66 FR 28355, May 22, 2001).

This action does not involve any technical standards that would require Agency consideration of voluntary consensus standards pursuant to section 12(d) of the National Technology Transfer and Advancement Act of 1995 (NTTAA), Public Law 104–113, section 12(d) (15 U.S.C. 272 note).

Nor does it require any special considerations under Executive Order 12898 entitled *Federal Actions to Address Environmental Justice in*

Minority Populations and Low-Income Populations (59 FR 7629, February 16, 1994) or Executive Order 12630, entitled *Governmental Actions and Interference with Constitutionally Protected Property Rights* (53 FR 8859, March 15, 1988).

In issuing this direct final rule, EPA has taken the necessary steps to eliminate drafting errors and ambiguity, minimize potential litigation, and provide a clear legal standard for affected conduct, as required by section 3 of Executive Order 12988, entitled *Civil Justice Reform* (61 FR 4729, February 7, 1996).

IV. Congressional Review Act

The Congressional Review Act, 5 U.S.C. 801 *et seq.,* as added by the Small Business Regulatory Enforcement Fairness Act of 1996, generally provides that before a rule may take effect, the Agency promulgating the rule must submit a rule report, which includes a copy of the rule, to each House of the Congress and the Comptroller General of the United States. EPA will submit a report containing this rule and other required information to the U.S. Senate, the U.S. House of Representatives, and the Comptroller General of the United States prior to publication of the rule in the **Federal Register**. This rule is not a ''major rule'' as defined by 5 U.S.C. 804(2).

List of Subjects in 40 CFR Part 180

Environmental protection, Administrative practice and procedure, Agricultural commodities, Pesticides and pests, Reporting and recordkeeping requirements.

Dated: February 13, 2003.

Peter Caulkins,

Acting Director, Registration Division, Office of Pesticides Programs.

Therefore, 40 CFR chapter I is amended as follows:

PART 180—[AMENDED]

1. The authority citation for part 180 continues to read as follows:

Authority: 21 U.S.C. 321(q), 346 (a) and 374.

§ 180.960 [Amended]

2. Section 180.960 is amended by adding alphabetically the following entries to the table.

Polymer	CAS No.
Acetic acid ethenyl ester, polymer with ethenol and (α)-2-propenyl-(ω)-hydroxypoly (oxy-1,2-ethanediyl) minimum number average molecular weight (in amu), 15,000	137091–12–4
Acrylic acid, polymerized, and its ethyl and methyl esters	None
Acrylic acid-sodium acrylate-sodium-2-methylpropanesulfonate copolymer, minimum average molecular weight (in amu), 4,500	97953–25–8
Acrylic acid-stearyl methacrylate copolymer, minimum number average molecular weight (in amu), 2,500	27756–15–6
* * * * *	
Acrylonitrile-butadiene copolymer conforming to 21 CFR 180.22, minimum average molecular weight (in amu), 1,000.	9003–18–3
Acrylonitrile-styrene-hydroxypropyl methacrylate copolymer, minimum number average molecular weight (in amu), 447,000	None
* * * * *	
Alkyl (C_{12}–C_{20}) methacrylate-methacrylic acid copolymer, minimum molecular weight (in amu), 11,900	None
3,5-Bis(6-isocyanatohexyl)-2H-1,3,5-oxadiazine-2,4,6-(3H,5H)-trione, polymer with diethylenetriamine, minimum number average molecular weight (in amu), 1,000,000	87823–33–4
Butadiene-styrene copolymer	None
1,4-Butanediol-methylenebis(4-phenylisocyanate)-poly(tetramethylene glycol) copolymer, minimum molecular weight (in amu) 158,000	9018– 04–6
* * * * *	
2-Butenedioic acid (Z)-, polymer with ethenol and ethenyl acetate, sodium salt, minimum number average molecular weight (in amu), 75,000	139871–83–3
α-Butyl-ω-hydroxypoly(oxypropylene) block polymer with poly(oxyethylene); molecular weight (in amu), 2,400–3,500	None
Castor oil, polyoxyethylated; the poly(oxyethylene) content averages 5–54 moles	None
Chlorinated polyethylene	64754–90–1
Cross-linked nylon-type polymer formed by the reaction of a mixture of sebacoyl chloride and polymethylene polyphenylisocycanate with a mixture of ethylenediamine and diethylenetriamine	None
Cross-linked polyurea-type encapsulating polymer	None
* * * * *	
Docosyl methacrylate-acrylic acid copolymer, or docosyl methacrylate-octadecyl methacrylate-acrylic acid copolymer, minimum number average molecular weight (in amu), 3,000	None
1,12-Dodecanediol dimethacrylate polymer, minimum molecular weight (in amu), 100,000	None
* * * * *	
Ethylene glycol dimethyacrylate-lauryl methacrylate copolymer, minimum molecular weight (in amu), 100,000	None
Ethylene glycol dimethacrylate polymer, minimum molecular weight (in amu), 100,000	None

Polymer	CAS No.
Fumaric acid-isophthalic acid-styrene-ethylene/propylene glycol copolymer, minimum average molecular weight (in amu), 1 x 10^{18}	None
Hexadecyl acrylate-acrylic acid copolymer, hexadecyl acrylate-butyl acrylate-acrylic acid copolymer, or hexadecyl acrylate-dodecyl acrylate-acrylic acid copolymer, minimum number average molecular weight (in amu), 3,000	None
1,6-Hexanediol dimethyacrylate polymer, minimum molecular weight (in amu), 100,000	None
* * * * *	
α-Hydro-ω-hydroxypoly(oxyethylene), minimum molecular weight (in amu), 100,000	None
α-Hydro-ω-hydroxypoly(oxyethylene)poly (oxypropylene) poly(oxyethylene) block copolymer; the minimum poly(oxypropylene) content is 27 moles and the minimum molecular weight (in amu) is 1,900	None
α-Hydro-ω-hydroxypoly(oxypropylene); minimum molecular weight (in amu) 2,000	None
Lauryl methacrylate-1,6-hexanediol dimethacrylate copolymer, minimum molecular weight (in amu), 100,000	None
* * * * *	
Maleic anhydride-methyl vinyl ether, copolymer, average molecular weight (in amu), 250,000	None
Maleic acid-butadiene copolymer	None

Polymer	CAS No.
Maleic acid monobutyl ester-vinyl methyl ether copolymer, minimum average molecular weight (in amu), 52,000	25119–68–0
Maleic acid monoethyl ester-vinyl methyl ether copolymer, minimum average molecular weight (in amu), 46,000	25087–06–3
Maleic acid monoisopropyl ester-vinyl methyl ether copolymer, minimum average molecular weight (in amu), 49,000	31307–95–6
* * * * *	
Methyl methacrylate-2-sulfoethyl methacrylate-dimethylaminoethylmethacrylate-glycidyl methacrylate-styrene-2-ethylhexyl acrylate graft copolymer, minimum average molecular weight (in amu), 9,600	None
Methyl vinyl ether-maleic acid copolymer), minimum number average molecular weight (in amu), 75,000	25153–40–6
Methyl vinyl ether-maleic acid copolymer, calcium sodium salt, minimum number average molecular weight (in amu), 900,000	62386–95–2
Monophosphate ester of the block copolymer α-hydro-ω-hydroxypoly(oxyethylene) poly(oxypropylene) poly(oxyethylene); the poly(oxypropylene) content averages 37–41 moles, average molecular weight (in amu), 8,000	None
α-(*p*-Nonylphenyl-ω-hydroxypoly(oxypropylene) block polymer with poly(oxyethylene); polyoxypropylene content of 10–60 moles; polyoxyethylene content of 10–80 moles; molecular weight (in amu), 1,200–7,100.	None

Polymer	CAS No.
α-(*p*-Nonylphenyl)poly(oxypropylene) block polymer with poly(oxyethylene); poly oxyethylene content 30 to 90 moles; molecular weight (in amu) averages 3,000	None
Octadecanoic acid, 12-hydroxy-, homopolymer, octadecanoate minimum number average molecular weight (in amu), 1,370	58128–22–6),
α-cis-9-Octadecenyl-ω-hydroxypoly(oxyethylene); the octadecenyl group is derived from oleyl alcohol and the poly(oxyethylene) content averages 20 moles	None
Octadecyl acrylate-acrylic acid copolymer, octadecyl acrylate-dodecyl acrylate-acrylic acid copolymer, octadecyl methacrylate-butyl acrylate-acrylic acid copolymer, octadecyl methacrylate-hexyl acrylate-acrylic acid copolymer, octadecyl methacrylate-dodecyl acrylate-acrylic acid copolymer, or octadecyl methacrylate-dodecyl methacrylate-acrylic acid copolymer, minimum number average molecular weight (in amu) 3,000	None
Oleic acid diester of α-hydro-ω-hydroxypoly(oxyethylene); the poly(oxyethylene), average molecular weight (in amu), 2,300	None
Polyamide polymer derived from sebacic acid, vegetable oil acids with or without dimerization, terephthalic acid and/or ethylenediamine	None
* * * * *	
Polyethylene, oxidized, minimum number average molecular weight (in amu), 1,200	None

Polymer	CAS No.
* * *	* *
Polymethylene polyphenylisocyanate, polymer with ethylene diamine, diethylene triamine and sebacoyl chloride, cross-linked; minimum number average molecular weight (in amu), 100,000	None
Polyoxyethylated primary amine (C_{14}–C_{18}); the fatty amine is derived from an animal source and contains 3% water; the poly(oxyethylene) content averages 20 moles	None
Polyoxyethylated sorbitol fatty acid esters; the polyoxyethylated sorbitol solution containing 15% water is reacted with fatty acids limited to C_{12}, C_{14}, C_{16}, and C_{18}, containing minor amounts of associated fatty acids; the poly(oxyethylene) content averages 30 moles.	None
Poly(oxyethylene/oxypropylene) monoalkyl (C_6–C_{10}) ether sodium fumarate adduct, minimum number average molecular weight (in amu), 1,900	102900–02–7
Polyoxymethylene copolymer, minimum number average molecular weight (in amu), 15,000	None
Poly(oxypropylene) block polymer with poly(oxyethylene), molecular weight (in amu), 1,800–16,000	None
Poly(phenylhexylurea), cross-linked, minimum average molecular weight (in amu), 36,000	None
Polypropylene	9003–07–0
Polystyrene, minimum number average molecular weight (in amu), 50,000	9003–53–6
Polytetrafluoroethylene	9002–84–0
Polyvinyl acetate, minimum molecular weight (in amu), 2,000	None

Polymer	CAS No.
Polyvinyl acetate--polyvinyl alcohol copolymer, minimum number average molecular weight (in amu), 50,000	25213–24–5
Polyvinyl alcohol	9002–89–5
Polyvinyl chloride	None
* * *	* *
Poly(vinylpyrrolidone), minimum number average molecular weight (in amu), 4,000	9003–39–8
Poly(vinylpyrrolidone-1-eicosene), minimum average molecular weight (in amu), 3,000	28211–18–9
Poly(vinylpyrrolidone-1-hexadecene), minimum average molecular weight (in amu), 4,700	63231–81–2
* * *	* *
Sodium polyflavinoidsulfonate, consisting chiefly of the copolymer of catechin and leucocyanidin	None
Stearyl methacrylate-1,6-hexanediol dimethacrylate copolymer, minimum molecular weight (in amu), 100,000	None
Styrene-2-ethylhexyl acrylate-glycidyl methacrylate-2-acrylamido-2-methylpropanesulfonic acid graft copolymer, minimum number average molecular weight (in amu), 12,500	None
* * *	* *
Styrene-maleic anhydride copolymer	None
Styrene-maleic anhydride copolymer, ester derivative	None
Tetradecyl acrylate-acrylic acid copolymer, minimum number average molecular weight (in amu), 3,000	None

Polymer	CAS No.
* * *	* *
α-[*p*-(1,1,3,3-Tetramethylbutyl)phenyl] poly(oxypropylene) block polymer with poly(oxyethylene); the poly(oxypropylene) content averages 25 moles, the poly(oxyethylene) content averages 40 moles, the molecular weight (in amu) averages 3,400	None
α-[2,4,6-Tris[1-(phenyl)ethyl]phenyl]-ω-hydroxy poly(oxyethylene) poly(oxypropylene) copolymer, the poly(oxypropylene) content averages 2–8 moles, the poly(oxyethylene) content averages 16–30moles, average molecular weight (in amu), 1,500	None
Urea-formaldehyde copolymer, minimum average molecular weight (in amu), 30,000	9011–05–6
Vinyl acetate-allyl acetate-monomethyl maleate copolymer, minimum average molecular weight (in amu), 20,000	None
Vinyl acetate-ethylene copolymer, minimum number average molecular weight (in amu), 69,000	24937–78–8
* * *	* *
Vinyl acetate-vinyl alcohol-alkyl lactone copolymer, minimum number average molecular weight (in amu), 40,000; minimum viscosity of 18 centipoise	None
Vinyl alcohol-disodium itaconate copolymer, minimum average molecular weight (in amu), 50,290	None

Polymer	CAS No.
Vinyl alcohol-vinyl acetate-monomethyl maleate, sodium salt-maleic acid, disodium salt-γ-butyrolactone acetic acid, sodium salt copolymer, minimum number average molecular weight (in amu), 20,000	None

Polymer	CAS No.
Vinyl chloride-vinyl acetate copolymers	None
Vinyl pyrrolidone-dimethylaminoethylmethacrylate copolymer, minimum number average molecular weight (in amu), 20,000	30581–59–0

Polymer	CAS No.
* * *	* *
Vinyl pyrrolidone-styrene copolymer	25086–29–7

§ 180.1001 [Amended]

3. Section 180.1001 is amended as follows:

i. The table in paragraph (c) is amended by removing the entries listed below:

Inert ingredients	Limits	Uses
Acrylamide potassium acrylate--acrylic acid copolymer, cross-linked (CAS Reg. No. 31212–13–2), minimum number average molecular weight (in atomic mass units (amu)) 1,000,000.	....	Carrier
Acrylic acid--stearyl methacrylate copolymer (CAS Reg. No. 27756–15–6), minimum number average molecular weight (in amu) 2,500.	....	Emulsifier, suspending agent, or rheology modifier
α-Butyl-ω-hydroxypoly(oxypropylene) block polymer with poly(oxyethylene); molecular weight (in amu) 2,400–3,500.	....	Surfactants, related adjuvants of surfactants
Castor oil, polyoxyethylated; the poly(oxyethylene) content averages 5–54 moles.	....	Surfactants, related adjuvants of surfactants
1,12-Dodecanediol dimethacrylate polymer.	Minimum molecular weight (in amu) 100,000..	Release rate regulator in pheromone formulation
Ethylene glycol dimethyacrylate--lauryl methacrylate copolymer.	Minimum molecular weight (in amu) 100,000..	Release rate regulator in pheromone formulation
Ethylene glycol dimethacrylate polymer.	Minimum molecular weight (in amu) 100,000..	Release rate regulator in pheromone formulation
1,6-Hexanediol dimethyacrylate polymer.	Minimum molecular weight (in amu) 100,000..	Release rate regulator in pheromone formulation
α-Hydro-ω-hydroxypoly(oxypropylene); molecular weight (in amu) 4,000.	....	Do.
Lauryl methacrylate--1,6-hexanediol dimethacrylate copolymer.	Minimum molecular weight (in amu) 100,000..	Release rate regulator in pheromone formulation
Maleic acid monobutyl ester--vinyl methyl ether copolymer, CAS No. 25119–68–0, minimum average molecular weight (in amu) 52,000.	....	Seed-coating adhesive, gel, and antitranspirant
Maleic acid monoethyl ester--vinyl methyl ether copolymer, CAS No. 25087–06–3, minimum average molecular weight (in amu) 46,000.	....	Seed-coating adhesive, gel, and antitranspirant
Maleic acid monoisopropyl ester-vinyl methyl ether copolymer, CAS No. 31307–95–6, minimum average molecular weight (in amu) 49,000.	....	Seed-coating adhesive, gel, and antitranspirant
Methyl vinyl ether--maleic acid copolymer (CAS Reg. No. 25153–40–6), minimum number average molecular weight (in amu) 75,000.	....	Dispersant, seed-coating adhesive
Methyl vinyl ether--maleic acid copolymer calcium sodium salt (CAS Reg. No. 62386–95–2), minimum number average molecular weight (in amu) 900,000.	....	Dispersant, seed-coating adhesive
α-(*p*-Nonylphenyl) poly(oxypropylene) block polymer with poly(oxyethylene); polyoxyethylene content 30 to 90 moles; molecular weight (in amu) averages 3,000.	....	Do.
α-(*p*-Nonylphenyl-ω-hydroxypoly(oxypropylene) block polymer with poly(oxyethylene); polyoxypropylene content of 10-60 moles; polyoxyethylene content of 10–80 moles; molecular weight (in amu) 1,200–7,100.	....	Do.
Octadecanoic acid, 12-hydroxy-, homopolymer, octadecanoate (CAS Reg. No. 58128–22–6), minimum number-average molecular weight 1,370.	....	dispersing agent, related adjuvant of surfactants, surfactant, suspending agent
α-cis-9-Octadecenyl-ω-hydroxypoly(oxyethylene); the octadecenyl group is derived from oleyl alcohol and the poly(oxyethylene) content averages 20 moles.	....	Surfactants, related adjuvants of surfactants
Polyethylene, oxidized, conforming to 21 CFR 172.260.	....	Coating agent
Polymers derived from the following monomers: acrylic acid, sodium form; butyl acrylate; ethyl acrylate; methacrylic acid and its ammonium and potassium salts; and methyl methacrylate	....	Surfactants, related adjuvants of surfactants
Polymerized sodium methacrylate.	....	pH control
Poly(oxyethylene/ oxypropylene) monoalkyl(C_6– C_{10}) ether sodium fumarate adduct (CAS Reg. No. 102900–02–7), minimum number average molecular weight (in amu) 1,900.	....	Surfactant
Poly(oxypropylene) block polymer with poly(oxyethylene); molecular weight (in amu) 1,800–16,000.	....	Do.
Polystyrene (CAS Reg. No. 9003–53–6), minimum number average molecular weight (in amu) 50,000).	....	Suspending agent, thickener

Inert ingredients	Limits	Uses
Poly(vinylpyrrolidone) (CAS Reg. No. 9003–39–8), minimum number average molecular weight (in amu) 4,000.	....	Surfactant, related adjuvants of surfactant
Poly(vinylpyrrolidone-1-eicosene) (CAS Reg. No. 28211–18–9).	Minimum average molecular weight 3,000..	Dispersing agent
Poly(vinylpyrrolidone-1-hexadecene) (CAS Reg. No. 63231–81–2).	Minimum average molecular weight (in amu) 4,700.	Dispersing agent
Stearyl methacrylate--1,6-hexanediol dimethacrylate copolymer.	Minimum molecular weight (in amu) 100,000..	Release rate regulator in pheromone formulation
Styrene-2-ethylhexyl acrylate-glycidyl methacrylate-2-acrylamido-2-methylpropanesulfonic acid graft copolymer, minimum number average molecular weight 12,500.	....	Dispersing agent/solvent
Vinyl pyrrolidone-dimethylaminoethylmethacrylate copolymer (CAS Reg. No. 30581–59–0), minimum number average molecular weight (in amu) 20,000.	....	Leaching inhibitor, binder for water-dispersible aggregates, sticker and suspension stabilizer

ii. Section 180.1001 is further amended by removing from the table in paragraph (d) the entries listed below:

Inert ingredients	Limits	Uses
Acetic acid ethenyl ester, polymer with ethenol and (α)-2-propenyl-(ω)-hydroxypoly (oxy-1,2-ethanediyl) (CAS Reg. No.137091–12–4); minimum number average molecular weight 15,000.	....	Component of water-soluble film
Acrylamide--acrylic acid resins	....	Thickeners
Acrylamide--sodium acrylate resins	....	Do.
Acrylic acid, polymerized, and its ethyl and methyl esters	....	Surfactants, related adjuvants of surfactants
Acrylic acid--sodium acrylate--sodium-2-methylpropanesulfonate copolymer (minimum average molecular weight (in amu) 4,500); CAS No. 97953–25–8.	....	Dispersing agent
Acrylonitrile--styrene-hydroxypropyl methacrylatecopolymer; minimum number average molecular weight (in amu) 447,000.	....	Pigment carrier
Alkyl (C_{12}–C_{20}) methacrylate-methacrylic acid copolymer; minimum molecular weight (in amu) 11,900.	....	Stabilizer; component of spray drift retardant
3,5-Bis(6-isocyanatohexyl)-2H-1,3,5-oxadiazine-2,4,6-(3H,5H)-trione, polymer with diethylenetriamine (CAS Reg. No. 87823–33–4); minimum number average molecular weight (in amu) 1,000,000.	....	Encapsulating agent
Butadiene-styrene copolymer	....	Adhesive, component of adhesive
2-Butenedioic acid (Z)-, polymer with ethenol and ethenyl acetate, sodium salt (minimum number averagemolecular weight (in amu) 75,000; CAS No. 139871–83–3).	....	Component of water-soluble film
Cross-linked polyurea-type encapsulating polymer formed by the reduction of a mixture of toluene diisocyanate and polymethylene polyphenylisocyanate	....	Encapsulating agent
Fumaric acid--isophthalic acid--styrene--ethylene/propylene glycol copolymer (minimum average molecular weight (in amu) 1 x 10^{18}).	....	Encapsulating agent
α-Hydro-ω-hydroxypoly(oxyethylene); molecular weight (in amu) 100,000 minimum.	....	Carrier
α-Hydro-ω-hydroxypoly(oxypropylene) (mol. wt. 2,000).	....	Component of defoamers
Maleic acid--butadiene copolymer.	3% of pesticide formulation.	Surfactants, related adjuvants surfactants
Maleic anhydride--methyl vinyl ether, copolymer; average molecular weight (in amu) 250,000.	....	Do.
Methyl methacrylate-2-sulfoethyl methacrylate-dimethylaminoethyl methacrylate-glycidyl methacrylate-styrene-2-ethylhexyl acrylate graft copolymer (minimum average molecular weight (in amu) 9,600).	....	Carrier
Monophosphate ester of the block copolymer α-hydro-ω-hydroxypoly(oxyethylene)poly(oxypropylene)poly(oxyethylene); the poly(oxypropylene) content averages 37–41 moles, and the molecular weight (in amu) averages 8,000.	....	Do.
Polymethylene polyphenylisocyanate, polymer with ethylene diamine, diethylene triamine and sebacoyl chloride, cross-linked; minimum number average molecular weight 100,000.	....	Encapsulating agent
Poly(phenylhexylurea), cross-linked; minimum average molecular weight 36,000.	....	Encapsulating agent
Polyvinyl acetate (as defined in 21 CFR 172.615).	....	Adhesive
Polyvinyl acetate--polyvinyl alcohol copolymer (CAS Reg. No. 25213–24–5).	Minimum number average molecular weight (in amu) 50,000..	Component of water-soluble film
Polyvinyl alcohol	....	Binder; water soluble bag-container or film-tape for encapsulating seeds

Inert ingredients	Limits	Uses
α-[*p*-(1,1,3,3-Tetramethylbutyl)phenyl] poly(oxypropylene) block polymer with poly(oxyethylene); the poly(oxypropylene) content averages 25 moles, the poly(oxyethylene) content averages 40 moles, the molecular weight (in amu) averages 3,400.	....	Do.
Vinyl acetate--allyl acetate--monomethyl maleate copolymer (minimum average molecular weight (in amu) 20,000).	....	Component on water-soluble film
Vinyl acetate--ethylene copolymer (CAS Reg. No. 24937–78–8); minimum number average molecular weight (in amu) 69,000.	....	Component of water-soluble film
Vinyl acetate--vinyl alcohol--alkyl lactone copolymer.	Minimum estimated number average molecular weight (in amu) 40,000; minimum viscosity of 18 centipoise..	Component of water-soluble film
Vinyl alcohol--disodium itaconate copolymer (minimum average molecular weight (in amu) 50,290).	....	Component of water-soluble film
Vinyl alcohol--vinyl acetate--monomethyl maleate, sodium salt--maleic acid, disodium salt-γ-butyrolactone acetic acid, sodium salt copolymer, minimum number average molecular weight (in amu) 20,000.	....	Carrier
Oleic acid diester of α-hydro-ω-hydroxypoly(oxyethylene); the poly(oxyethylene) molecular weight (in amu) averages 2,300.	....	Surfactant
Polyethylene, oxidized (as defined in 21 CFR 172.260(a)).	....	Surfactants, related adjuvants of surfactants
Polyoxyethylated primary amine (C_{14}–C_{18}); the fatty amine is derived from an animal source and contains 3% water; the poly(oxyethylene) content averages 20 moles.	Applied prior to planting of any crop, or as directed spray around the base of any crop..	Surfactant
Polyvinylpyrrolidone, butylated.	....	Surfactants, related adjuvants of surfactants
Sodium polyflavinoidsulfonate, consisting chiefly of the copolymer of catechin and leucocyanidin.	....	Sunscreen agent for viral insecticides for use on cotton
Styrene--maleic anhydride copolymer	For preemergence use only..	Suspending or dispersing agent
Styrene--maleic anhydride copolymer, ester derivative.	Limited to 3% of the formulation..	Suspending or dispersing agent. For pre-emergence use and use prior to formation of edible parts of plant
α-[2,4,6-Tris[1-(phenyl)ethyl]phenyl]-ω-hydroxy poly(oxyethylene) poly(oxypropylene) copolymer, the poly(oxypropylene) content averages 2–8 moles, the poly(oxyethylene) content averages 16–30 moles, and the average molecular weight (in amu) is 1,500.	Not more than 15% in the pesticide formulation..	Do.
Urea--formaldehyde copolymer (minimum average molecular weight (in amu) 30,000); CAS No. 9011–05–6.	....	Encapsulating agent
Vinyl chloride--vinyl acetate copolymers.	Not more than 2% of pesticide formulation.	Inert binding agent for formulation applied only to soil.
Vinylpyrrolidone--styrene copolymer (CAS Reg. No. 25086–29–7).	Not to exceed 2% of the formulation..	Opacifier

iii. Section 180.1001 is further amended by removing the following entries from the table in paragraph (e):

Inert ingredients	Limits	Uses
Acrylic acid--stearyl methacrylate copolymer (CAS Reg. No. 27756–15–6), minimum number average molecular weight (in amu) 2,500.	....	Emulsifier, suspending agent, or rheology modifier
Acrylonitrile--butadiene copolymer (CAS Reg. No. 9003–18–3) conforming to 21 CFR 180.22, minimum average molecular weight (in amu) 1,000.	....	Carrier in animal tag and similar slow-release devices
α-Butyl-ω-hydroxypoly (oxypropylene) block polymer with poly(oxyethylene); molecular weight (in amu) 2,400–3,500.	....	Surfactants,emulsifier, related adjuvants of surfactants.
1,4-Butanediol-methylenebis(4-phenylisocyanate)-poly(tetramethylene glycol) copolymer (CAS Reg. No. 9018–04–6); minimum molecular weight (in amu) 158,000.	....	Solid diluent; carrier
Castor oil, polyoxyethylated; the poly(oxyethylene) content averages 5–54 moles.	....	Surfactants, related adjuvants of surfactants
Castor oil, polyoxyethylated; the poly(oxyethylene) content averages 40 moles.	....	Surfactants, related adjuvants of surfactants
Chlorinated polyethylene (CAS Reg. No. 64754–90–1).	....	Resin, component animal tag
Cross-linked polyurea-type encapsulating polymer.	....	Encapsulating agent
1,2 Ethanediamine, polymer with oxirane and methyloxirane (CAS Reg. No. 26316–40–5) minimum number average molecular weight 2,800 and the range of number average molecular weight is 2,800 to 10,000 daltons.	....	Surfactant, dispersing agent
α-Hydro-ω-hydroxypoly (oxypropylene); molecular weight (in amu) 2,000.	....	Surfactants, related adjuvants of surfactants

Inert ingredients	Limits	Uses
α-Hydro-ω-hydroxypoly (oxyethylene)poly (oxypropylene) poly(oxyethylene) block copolymer; the minimum poly(oxypropylene) content is 27 moles and the minimum molecular weight (in amu) is 1,900.	....	Surfactant, wetting agent
Maleic acid monobutyl ester--vinyl methyl ether copolymer, CAS No. 25119–68–0, minimum average molecular weight (in amu) 52,000.	....	Seed-coating adhesive, gel, and antitranspirant
Maleic acid monoethyl ester--vinyl methyl ether and copolymer, CAS No. 25087–06–3, minimum average molecular weight (in amu) 46,000.	....	Seed-coating adhesive gel, antitranspirant.
Maleic acid monoisopropyl ester--vinyl methyl ether copolymer, CAS No. 31307–95–6, minimum average molecular weight (in amu) 49,000.	....	Seed-coating adhesive gel, antitranspirant.
Methyl vinyl ether--maleic acid copolymer (CAS Reg. No. 25153–40–6), minimum number average molecular weight (in amu) 75,000.	....	Dispersant
Methyl vinyl ether--maleic acid copolymer calcium sodium salt (CAS Reg. No. 62386–95–2), minimum number average molecular weight (in amu) 900,000.	....	Dispersant
α-(*p*-Nonylphenyl)poly(oxypropylene) block polymer with poly(oxyethylene); polyoxyethylene content 30 to 90 moles; molecular weight (in amu) averages 3,000.	....	Do.
α-(*p*-Nonylphenyl)-ω-hydroxypoly(oxypropylene) block polymer with poly(oxyethylene); polyoxypropylene content of 20–60 moles; polyoxyethylene content of 30–80 moles; molecular weight (in amu) 2,100–7,100.	....	Surfactants, related adjuvants of surfactants
α-cis-9-Octadecenyl-ω-hydroxypoly (oxyethylene); the octadecenyl group is derived from oleyl alcohol and the poly(oxyethylene) content average 20 moles.	....	Do.
Polyacrylic acid	....	Surfactants, related adjuvants of surfactants
Polyoxyethylated sorbitol fatty acid esters; the polyoxyethylated sorbitol solution containing 15% water is reacted with fatty acids limited to C_{12}, C_{14}, C_{16}, and C_{18} containing minor amounts of associated fatty acids; the poly(oxyethylene) content averages 30 moles.	....	Do.
Poly(oxypropylene) block polymer with poly(oxyethylene); molecular weight (in amu) 1,800–9,000.	....	Do.
Polypropylene (CAS Reg. No. 9003–07–0).	....	Carrier, component of plastic slow-release tag
Polystyrene (CAS Reg. No. 9003–53–6), minimum number average molecular weight (in amu) 50,000).	....	Suspending agent, thickener
Polytetrafluoroethylene (CAS Reg. No. 9002–84–0).	....	Component of plastic slow release tag
Polyvinyl alcohol (CAS Reg. No. 9002–89–5).	....	Surfactant
Polyvinyl chloride	....	Solid diluent, carrier
Vinyl pyrrolidone--dimethylaminoethylmethacrylate copolymer (CAS Reg. No. 30581–590), minimum number average molecular weight (in amu) 20,000.	....	Leaching inhibitor, binder for water-dispersible aggregates, sticker and suspension stabilizer

§§ 180.1028, 180.1038, 180.1053, 180.1060, and 180.1112 [Removed]

4. Sections 180.1028, 180.1038, 180.1053, 180.1060, and 180.1112 are removed.

[FR Doc. 03–4384 Filed 2–25–03; 8:45 am]

BILLING CODE 6560–50–S

LEGAL SERVICES CORPORATION

45 CFR Part 1611

Income Level for Individuals Eligible for Assistance

AGENCY: Legal Services Corporation.

ACTION: Final rule—Correction.

SUMMARY: The Legal Services Corporation (''Corporation'') is required by law to establish maximum income levels for individuals eligible for legal assistance. The 2003 updates to the specified income levels reflecting the annual amendments to the Federal Poverty Guidelines as issued by the Department of Health and Human Services were published on February 18, 2003. It has come to our attention that the guideline amounts for a family of 5 was inadvertantly omitted from the Income Guidelines Table as published. A corrected table is set forth below.

EFFECTIVE DATE: This rule is effective as of February 18, 2003.

FOR FURTHER INFORMATION CONTACT: Mattie C. Condray, Senior Assistant General Counsel, Legal Services Corporation, 750 First Street NE., Washington, DC 20002–4250; (202) 336–8817; *mcondray@lsc.gov*.

SUPPLEMENTARY INFORMATION: Section 1007(a)(2) of the Legal Services Corporation Act (''Act''), 42 U.S.C. 2996f(a)(2), requires the Corporation to establish maximum income levels for individuals eligible for legal assistance, and the Act provides that other specified factors shall be taken into account along with income.

Section 1611.3(b) of the Corporation's regulations establishes a maximum income level equivalent to one hundred and twenty-five percent (125%) of the Federal Poverty Guidelines. Since 1982, the Department of Health and Human Services has been responsible for updating and issuing the Poverty Guidelines. The revised figures for 2003 set out below are equivalent to 125% of the current Poverty Guidelines as published on February 7, 2003 (68 FR 6457).

List of Subjects in 45 CFR Part 1611

Grant Programs—Law, Legal Services.

For reasons set forth above, 45 CFR 1611 is amended as follows:

PART 1611—ELIGIBILITY

1. The authority citation for part 1611 continues to read as follows:

Authority: Secs. 1006(b)(1), 1007(a)(1) Legal Services Corporation Act of 1974, 42 U.S.C. 2996e(b)(1), 2996f(a)(1), 2996f(a)(2).

2. Appendix A of Part 1611 is revised to read as follows:

Appendix A of Part 1611

LEGAL SERVICES CORPORATION 2003 POVERTY GUIDELINES*

Size of family unit	48 Contiguous States and the District of Columbia[i]	Alaska [ii]	Hawaii [iii]
1	$11,225	$14,013	$12,913
2	15,150	18,925	17,425
3	19,075	23,838	21,938
4	23,000	28,750	26,450
5	26,925	33,663	30,963
6	30,850	38,575	35,475
7	34,775	43,488	39,988
8	38,700	48,400	44,500

*The figures in this table represent 125% of the poverty guidelines by family size as determined by the Department of Health and Human Services.

[i] For family units with more than eight members, add $3,925 for each additional member in a family.

[ii] For family units with more than eight members, add $4,913 for each additional member in a family.

[iii] For family units with more than eight members, add $4,513 for each additional member in a family.

Victor M. Fortuno,

Vice President for Legal Affairs, General Counsel & Corporate Secretary.

[FR Doc. 03–4429 Filed 2–25–03; 8:45 am]

BILLING CODE 7050–01–P

Proposed Rules

Federal Register
Vol. 68, No. 38
Wednesday, February 26, 2003

This section of the FEDERAL REGISTER contains notices to the public of the proposed issuance of rules and regulations. The purpose of these notices is to give interested persons an opportunity to participate in the rule making prior to the adoption of the final rules.

DEPARTMENT OF AGRICULTURE

Food Safety and Inspection Service

9 CFR Parts 391, 590, and 592

[Docket No. 02–034P]

RIN 0583–AC94

Changes in Fees for Meat, Poultry, and Egg Products Inspection Services—Calendar Year (CY) 2003

AGENCY: Food Safety and Inspection Service, USDA.

ACTION: Proposed rule.

SUMMARY: The Food Safety and Inspection Service (FSIS) is proposing to change the fees that it charges meat and poultry establishments, egg products plants, importers, and exporters for providing voluntary inspection services, overtime and holiday inspection services, identification services, certification services, and laboratory services. The Agency is proposing to raise the fees for voluntary base time and holiday and overtime inspection services. These increases in fees reflect, among other factors, the national and locality pay raise for Federal employees (proposed 4.1 percent increase effective January 2003) and inflation. FSIS is also proposing to decrease the fee for laboratory services because of greater efficiencies realized. The Agency is also proposing to decrease the annual fee for the Accredited Laboratory Program from $1,500.00 to $1,000.00.

DATES: The Agency must receive comments by March 28, 2003.

ADDRESSES: Submit one original and two copies of written comments to FSIS Docket Clerk, Docket #02–034P, U.S. Department of Agriculture, Food Safety and Inspection Service, Room 102, Cotton Annex, 300 12th Street, SW., Washington, DC 20250–3700. All comments submitted in response to this proposal will be available for public inspection in the Docket Clerk's Office between 8:30 a.m. and 4:30 p.m., Monday through Friday, except Federal holidays.

FOR FURTHER INFORMATION CONTACT: For information concerning policy issues, contact Daniel Engeljohn, Ph.D., Director, Regulations Development and Analysis Division, Office of Policy, Program Development and Evaluation, FSIS, U.S. Department of Agriculture, Room 112, Cotton Annex, 300 12th Street, SW, Washington, DC 20250–3700, (202) 720–5627, fax number (202) 690–0486.

For information concerning fees, contact Raymond M. Saunders, Director, Budget Division, Office of Management, FSIS, U.S. Department of Agriculture, 2158 South Building, 1400 Independence Avenue, SW, Washington, DC 20250–3700, (202) 720–3367, fax (202)690–4155.

SUPPLEMENTARY INFORMATION:

Background

The Federal Meat Inspection Act (FMIA)(21 U.S.C. 601 *et seq.*), the Poultry Products Inspection Act (PPIA)(21 U.S.C. 451 *et seq.*), and the Egg Products Inspection Act (EPIA) (21 U.S.C. 1031 *et seq.*) provide for mandatory Federal inspection of livestock and poultry slaughter at official establishments, and meat and poultry processing at official establishments and of egg products processing at official plants. FSIS bears the cost of mandatory inspection. Establishments and plants pay for inspection services performed on holidays or on an overtime basis.

In addition, under the Agricultural Marketing Act of 1946, as amended (7 U.S.C. 1621 *et seq.*)(AMA), FSIS provides a range of voluntary inspection, certification, and identification services to assist in the orderly marketing of various animal products and byproducts. These services include the certification of technical animal fats and the inspection of exotic animal products, such as antelope and elk. FSIS is required to recover the costs of voluntary inspection, certification, and identification services.

Under the AMA, FSIS also provides certain voluntary laboratory services that establishments and others may request the Agency to perform. Laboratory services are provided for four types of analytic testing: microbiological testing, residue chemistry tests, food composition tests, and pathology testing. FSIS must recover these costs.

Non-Federal analytical laboratories are qualified under the Accredited Laboratory Program to conduct analyses of official meat and poultry samples. The Food, Agriculture, Conservation, and Trade Act of 1990, as amended, mandates laboratory accreditation fees that cover the costs of the Accredited Laboratory Program. The same Act mandates annual payment on the anniversary date of each accreditation.

Every year, FSIS reviews the fees that it charges for providing overtime and holiday inspection services; voluntary inspection, identification, and certification services; and laboratory services. The Agency performs a cost analysis to determine whether the fees that it has established are adequate to recover the costs that it incurs in providing these services. In the Agency's analysis of projected costs for January 12, 2003 to January 10, 2004, the Agency has identified increases in the costs of voluntary base time inspection services and overtime and holiday inspection services. FSIS has also identified decreases in the costs of laboratory services because of greater efficiencies. The Agency is also proposing to decrease the annual fee for participants in the Accredited Laboratory Program from $1,500.00 to $1,000.00 because of a surplus of accumulated funds.

FSIS calculated the proposed fees by adding the projected increase in salaries and inflation for 2003 to the actual cost of the services in 2002. The national and locality pay raise for Federal employees is proposed to be a 4.1 percent increase effective January 2003. The Agency calculated inflation to be 2.1% for 2003. Section 10703 of the 2002 Farm bill authorizes the Secretary of Agriculture to set the hourly rate of compensation for FSIS employees exempt from Fair Labor Standards Act (*i.e.*, veterinarians) working in establishments subject to the FMIA and PPIA at one and one-half times the employee's hourly rate of base pay. FSIS has adjusted the overtime fees to cover true time-and-a-half for all in-plant employees doing overtime work. Previously, veterinarians were limited to the time-and-a-half rate paid to employees at grade level GS–10, step 1. Finally, because of improvements in accessing data from the accounting

system, the Agency has been able to estimate the employee benefits ascribable to overtime work and included these in the fee calculation. These costs were formerly included in the base rate.

The current and proposed fees are listed by type of service in Table 1.

TABLE 1.—CURRENT AND PROPOSED FEES—PER HOUR PER EMPLOYEE—BY TYPE OF SERVICE

Service	Previous rate	Proposed rate
Base time	$42.64	$43.64
Overtime & holiday	44.40	50.04
Laboratory	68.32	61.80

The differing proposed fee increase for each type of service is the result of the different amount that it costs FSIS to provide these three types of services. The differences in costs stem from various factors, including different salary levels of the program employees who perform the services. *See* Table 2.

TABLE 2.—CALCULATIONS FOR THE DIFFERENT TYPES OF SERVICES

Base Time:	
Actual CY 2002 cost	$22.54
Pay raise (4.1%)	0.92
Benefits	6.10
Travel, operating & lab costs, & inflation	2.26
Program overhead	4.27
Agency overhead	7.03
Allowance for bad debt	0.52
Total	$43.64
Overtime and Holiday Inspection Services:	
Actual CY 2002 cost	30.10
Time & a half for veterinarians	2.73
Pay raise (4.1%)	1.35
Benefits	1.71
Travel, operating & lab costs, & inflation	2.26
Program overhead	4.27
Agency overhead	7.03
Allowance for bad debt	0.60
Adjustment for divisibility into quarter hours	(0.01)
Total	50.04
Laboratory Services:	
FY 2001 hourly salaries & benefits	32.05
Pay raises in 2002 & 2003	2.85
Travel & operating costs for 2002 & 2003	5.72
Program overhead	14.13
Agency overhead	6.32
Allowance for bad debt	0.74
Adjustment for divisibility by quarter hours	(0.01)
Total	61.80

The Agency must recover the actual cost of voluntary inspection services covered by this proposed rule. These fee increases are essential for the continued sound financial management of the Agency's costs. FSIS plans to make the final rule effective as soon as possible. To expeditiously make this rulemaking effective so that the increased costs can be recovered in a timely fashion, and because the Agency has previously announced (65 FR 60093) that it would be reviewing these fees on an annual basis, the Administrator has determined that 30 days for public comment is sufficient.

Executive Order 12866 and Regulatory Flexibility Act

Because this final rule has been determined to be not significant, the Office of Management and Budget (OMB) did not review it under Executive Order 12866.

The Administrator, FSIS, has determined that this proposed rule would not have a significant economic impact, as defined by the Regulatory Flexibility Act (5 U.S.C. 601), on a substantial number of small entities.

Establishments and plants that seek FSIS services are likely to have calculated that the incremental costs of overtime and holiday inspection services would be less than the incremental expected benefits of additional revenues that they would realize from additional production.

Economic Effects

As a result of the proposed fees, the Agency expects to collect an estimated $119 million in revenues for 2003, compared to $101 million under the current fee structure. The costs that industry would experience by the raise in fees are similar to other increases that the industry faces because of inflation and wage increases.

The total volume of meat and poultry slaughtered under Federal inspection in 2001 was about 83 billion pounds (Livestock, Dairy, Meat, and Poultry Outlook Report, Economic Research Service, USDA, August 15, 2002). The total volume of U.S. egg product production in 2001 was about 2.319 billion pounds (2002 Agriculture Statistics, USDA). The increase in cost per pound of product associated with the proposed fees increases is, in general, $.0002. Even in competitive industries like meat, poultry, and egg products, this amount of increase in costs would have an insignificant impact on profits and prices.

The industry is likely to pass through a significant portion of the proposed fee increases to consumers because of the inelastic nature of the demand curve facing these firms. Research has shown that consumers are unlikely to reduce demand significantly for meat and poultry products, including egg products, when prices increase. Huang estimates that demand would fall by .36 percent for a one percent increase in price (Huang, Kao S., *A Complete System of U.S. Demand for Food*. USDA/ERS Technical Bulletin No 1821, 1993, p.24). Because of the inelastic nature of demand and the competitive nature of the industry, individual firms are not likely to experience any change in market share in response to an increase in inspection fees.

Executive Order 12988

This proposed rule has been reviewed under Executive Order 12988, Civil Justice Reform. This proposed rule: (1) Preempts State and local laws and regulations that are inconsistent with this rule; (2) has no retroactive effect; and (3) does not require administrative proceedings before parties may file suit in court challenging this rule. However, the administrative procedures specified in 9 CFR 306.5, 381.35, and 590.300 through 590.370, respectively, must be exhausted before any judicial challenge of the application of the provisions of this proposed rule, if the challenge involves any decision of an FSIS employee relating to inspection services provided under the FMIA, PPIA, or EPIA.

Additional Public Notification

Public awareness of all segments of rulemaking and policy development is important. Consequently, in an effort to better ensure that minorities, women, and persons with disabilities are aware of this proposed rule, FSIS will announce it and make copies of this **Federal Register** publication available through the FSIS Constituent Update. FSIS provides a weekly Constituent Update, which is communicated via Listserv, a free e-mail subscription service. In addition, the update is available on-line through the FSIS Web page located at *http://www.fsis.usda.gov*. The update is used to provide information regarding FSIS policies, procedures, regulations, **Federal Register** notices, FSIS public meetings, recalls, and any other types of information that could affect or would be of interest to our constituents/stakeholders. The constituent Listserv

consists of industry, trade, and farm groups, consumer interest groups, allied health professionals, scientific professionals, and other individuals that have requested to be included. Through the Listserv and web page, FSIS is able to provide information to a much broader, more diverse audience than would otherwise be possible.

For more information contact the Congressional and Public Affairs Office, at (202) 720–9113. To be added to the free e-mail subscription service (Listserv) go to the ''Constituent Update'' page on the FSIS Web site at *http://www.fsis.usda.gov/oa/update/update.htm*. Click on the ''Subscribe to the Constituent Update Listserv'' link, then fill out and submit the form.

List of Subjects

9 CFR Part 391

Fees and charges, Government employees, Meat inspection, Poultry products.

9 CFR Part 590

Eggs and egg products, Exports, Food labeling, Imports.

9 CFR Part 592

Eggs and egg products, Exports, Food labeling, Imports.

For the reasons set forth in the preamble, FSIS proposes to amend 9 CFR chapter III as follows:

PART 391—FEES AND CHARGES FOR INSPECTION AND LABORATORY ACCREDITATION

1. The authority citation for part 391 continues to read as follows:

Authority: 7 U.S.C. 138f; 7 U.S.C. 394, 1622 and 1624; 21 U.S.C. 451 *et seq.*; 21 U.S.C. 601–695; 7 CFR 2.18 and 2.53.

2. Sections 391.2, 391.3, and 391.4, are revised to read as follows:

§ 391.2 Base time rate.

The base time rate for inspection services provided pursuant to §§ 350.7, 351.8, 351.9, 352.5, 354.101, 355.12, and 362.5 is $43.64 per hour per program employee.

§ 391.3 Overtime and holiday rate.

The overtime and holiday rate for inspection services provided pursuant to §§ 307.5, 350.7, 351.8, 351.9, 352.5, 354.101, 355.12, 362.5 and 381.38 is $50.04 per hour per program employee.

§ 391.4 Laboratory services rate.

The rate for laboratory services provided pursuant to §§ 350.7, 351.9, 352.5, 354.101, 355.12, and 362.5 is $61.80 per hour per program employee.

3. In § 391.5, paragraph (a) is revised to read as follows:

§ 391.5 Laboratory accreditation fees.

(a) The annual fee for the initial accreditation and maintenance of accreditation provided pursuant to §§ 318.21 and 381.153 shall be $1,000 per accreditation.

* * * * *

PART 590—INSPECTION OF EGGS AND EGG PRODUCTS (EGG PRODUCTS INSPECTION ACT)

4. The authority citation for Part 590 continues to read as follows:

Authority: 21 U.S.C. 1031–1056.

5. Section 590.126 is revised to read as follows:

§ 590.126 Overtime inspection service.

When operations in an official plant require the services of inspection personnel beyond their regularly assigned tour of duty on any day or on a day outside the established schedule, such services are considered as overtime work. The official plant must give reasonable advance notice to the inspector of any overtime service necessary and must pay the Agency for such overtime at an hourly rate of $50.04.

6. In § 590.128, paragraph (a) is revised to read as follows:

§ 590.128 Holiday inspection service.

(a) When an official plant requires inspection service on a holiday or a day designated in lieu of a holiday, such service is considered holiday work. The official plant must, in advance of such holiday work, request the inspector in charge to furnish inspection service during such period and must pay the Agency for such holiday work at an hourly rate of $50.04.

* * * * *

PART 592—VOLUNTARY INSPECTION OF EGG PRODUCTS

7. The authority citation for Part 592 continues to read as follows:

Authority: 7 U.S.C. 1621–1627.

8. Sections 592.2, 592.3, and 592.4 are revised to read as follows:

§ 592.2 Base time rate.

The base time rate for voluntary inspection services of egg products is $43.64 per hour per program employee.

§ 592.3 Overtime rate.

When operations in an official plant require the services of inspection personnel beyond their regularly assigned tour of duty on any day or on a day outside the established schedule, such services are considered as overtime work. The official plant must give reasonable advance notice to the inspector of any overtime service necessary and must pay the Agency for such overtime at an hourly rate of $50.04.

§ 592.4 Holiday rate.

When an official plant requires voluntary inspection service on a holiday or a day designated in lieu of a holiday, such service is considered holiday work. The official plant must, in advance of such holiday work, request the inspector in charge to furnish inspection service during such period and must pay the Agency for such holiday work at an hourly rate of $50.04.

Done at Washington, DC, on: February 20, 2003.

Linda M. Swacina,

Associate Administrator.

[FR Doc. 03–4393 Filed 2–25–03; 8:45 am]

BILLING CODE 3410–DM–P

NATIONAL CREDIT UNION ADMINISTRATION

12 CFR Part 709

Treatment of Swap Agreements in Liquidation or Conservatorship

AGENCY: National Credit Union Administration.

ACTION: Proposed rule.

SUMMARY: The National Credit Union Administration (NCUA) is proposing to amend its involuntary liquidation regulation to designate swap agreements (swaps) as qualified financial contracts (QFCs). Treatment of swaps as QFCs will limit swap counterparty exposure when a Federally-insured credit union is placed into involuntary liquidation or a conservatorship and thereby encourage entities to engage in swaps with Federally-insured credit unions. Treatment of swaps as QFCs will also help preserve market stability.

DATES: Comments must be received on or before March 28, 2003.

ADDRESSES: Direct comments to Becky Baker, Secretary of the Board. Mail or hand-deliver comments to: National Credit Union Administration, 1775 Duke Street, Alexandria, Virginia 22314–3428. You are encouraged to fax comments to (703) 518–6319 or e-mail comments to *regcomments@ncua.gov* instead of mailing or hand-delivering them. Whatever method you choose, *please send comments by one method only.*

FOR FURTHER INFORMATION CONTACT: Paul Peterson, Staff Attorney, Office of

General Counsel, at the above address or telephone: (703) 518–6540.

SUPPLEMENTARY INFORMATION:

A. Background

Swaps are financial derivative transactions. NCUA's corporate rule permits corporate credit unions to engage in derivative transactions, including swaps, if specifically approved for such activity by the Board. 12 CFR part 704, Appendix B, part IV. NCUA's investment regulation generally prohibits natural person Federal credit unions from engaging in financial derivatives activities, but NCUA may approve a credit union for participation in an investment pilot program involving swaps and other derivatives. 12 CFR 703.110(a), 703.140. State chartered natural person credit unions that are Federally-insured may engage in swaps if permitted under their chartering statutes.

In 1989, Congress amended both the Federal Deposit Insurance Act (FDIA) and the Federal Credit Union Act (FCU Act) to add provisions concerning the treatment of QFCs in liquidation, receivership, or conservatorship. 12 U.S.C. 1821(e)(3), (8); 1787(c)(3), (8). Generally, these QFC provisions enable a QFC counterparty to exercise its contractual rights to terminate and net QFCs and protect itself against the selective assumption of QFCs by a liquidating agent, receiver, or conservator. QFC treatment limits counterparty exposure and preserves market stability when a bank or credit union with QFCs enters liquidation, receivership, or conservatorship.

The FDIA provides that ''the term 'qualified financial contract' means any securities contract, commodities contract, forward contract, repurchase agreement, *swap agreement,* and any similar agreement that the [Federal Deposit Insurance] Corporation (FDIC) determines by regulation to be a qualified financial contract for purposes of this paragraph.'' 12 U.S.C. 1821(e)(8)(D)(i)(emphasis added). The FCU Act's QFC definition is very similar to the FDIA's definition and includes securities contracts, forward contracts, and repurchase agreements but omits swaps and commodities contracts. The FCU Act authorizes the NCUA Board, like the FDIA authorizes the FDIC, to add similar agreements to the definition of QFC by regulation. 12 U.S.C. 1787(c)(8)(D)(i).

The Board believes swaps are similar to those agreements enumerated in the FCU Act's definition and should be recognized as QFCs. *See* H.R. Rep. No. 101–484 at 1 (recognizing that swaps are ''similar'' to forward contracts, securities contracts, and repurchase agreements), to accompany Pub. L. 101–311 (Bankruptcy: Swap Agreements and Forward Contracts), *reprinted in* 1990 U.S.C.C.A.N. 223. A Board determination that swaps receive QFC treatment will provide greater certainty about the treatment of swaps if a Federally-insured credit union is placed into involuntary liquidation or a conservatorship, will encourage counterparties to engage in swaps with credit unions, and will parallel the FDIA treatment of swaps involving banks.

Generally, NCUA provides a 60-day comment period on proposed rules. NCUA Interpretative Ruling and Policy Statement 87–2, Developing and Reviewing Government Regulations, III. The Board has determined that a 30-day comment period, rather than a 60-day comment period, is appropriate for this proposed rule. The proposed rule should not be controversial. Few credit unions are currently authorized to engage in swaps, and the treatment of swaps as QFCs would be beneficial to both credit unions and counterparties, including banks, that engage in swaps with credit unions.

Until a final rule is effective, the Board has determined that it will exercise its discretion as liquidating agent or conservator and provide swaps with QFC treatment if there is a liquidation or conservatorship involving swaps.

Regulatory Procedures

Regulatory Flexibility Act

The Regulatory Flexibility Act requires NCUA to prepare an analysis to describe any significant economic impact a proposed rule may have on a substantial number of small credit unions (those under one million dollars in assets). The Board believes it unlikely that any small Federally-insured credit unions engage in swaps. Accordingly, the Board believes that the proposed rule would not have a significant economic impact on a substantial number of small credit unions, and, therefore, a regulatory flexibility analysis is not required.

Paperwork Reduction Act

NCUA has determined that the proposed rule would not increase paperwork requirements under the Paperwork Reduction Act of 1995 and regulations of the Office of Management and Budget.

Executive Order 13132

Executive Order 13132 encourages independent regulatory agencies to consider the impact of their actions on State and local interests. In adherence to fundamental federalism principles, NCUA, an independent regulatory agency as defined in 44 U.S.C. 3502(5), voluntarily complies with the executive order. The proposed rule would not have substantial direct effects on the States, on the connection between the national government and the States, or on the distribution of power and responsibilities among the various levels of government. NCUA has determined that this proposed rule does not constitute a policy that has federalism implications for purposes of the executive order.

The Treasury and General Government Appropriations Act, 1999—Assessment of Federal Regulations and Policies on Families

The NCUA has determined that this proposed rule would not affect family well-being within the meaning of section 654 of the Treasury and General Government Appropriations Act, 1999, Pub. L. 105–277, 112 Stat. 2681 (1998).

Agency Regulatory Goal

NCUA's goal is to promulgate clear and understandable regulations that impose minimal regulatory burden. We request your comments on whether the proposed rule is understandable and minimally intrusive.

List of Subjects in 12 CFR Part 709

Credit unions, Liquidations.

By the National Credit Union Administration Board on February 20, 2003.

Becky Baker,

Secretary of the Board.

Accordingly, NCUA proposes to amend 12 CFR part 709 as follows:

PART 709—INVOLUNTARY LIQUIDATION OF FEDERAL CREDIT UNIONS AND ADJUDICATION OF CREDITOR CLAIMS INVOLVING FEDERALLY INSURED CREDIT UNIONS IN LIQUIDATION

1. The authority citation for part 709 continues to read as follows:

Authority: 12 U.S.C. 1757, 12 U.S.C. 1766, 12 U.S.C. 1767, 12 U.S.C. 1786(h), 12 U.S.C. 1787, 12 U.S.C. 1788, 12 U.S.C. 1789, 12 U.S.C. 1789a.

2. Add § 709.13 to read as follows:

§ 709.13 Treatment of swap agreements in liquidation or conservatorship.

The Board has determined that a swap agreement, as defined in the Federal Deposit Insurance Act at 12 U.S.C. 1821(e)(8)(D)(vi), is a qualified financial contract for purposes of the special

treatment for qualified financial contracts provided in 12 U.S.C. 1787(c).

[FR Doc. 03–4444 Filed 2–25–03; 8:45 am]

BILLING CODE 7535–01–P

DEPARTMENT OF TRANSPORTATION

Federal Aviation Administration

14 CFR Part 39

[Docket No. 2002–SW–31–AD]

RIN 2120–AA64

Airworthiness Directives; Model HH–1K, TH–1F, TH–1L, UH–1A, UH–1B, UH–1E, UH–1F, UH–1H, UH–1L, and UH–1P; and Southwest Florida Aviation Model SW204, SW204HP, SW205, and SW205A–1 Helicopters, Manufactured by Bell Helicopter Textron, Inc. (BHTI) for the Armed Forces of the United States

AGENCY: Federal Aviation Administration, DOT.

ACTION: Notice of proposed rulemaking (NPRM).

SUMMARY: This document proposes the supersedure of an existing airworthiness directive (AD) that applies to specified type-certificated military surplus helicopters. That AD currently requires visual and radiographic inspections of the Boom Station (BS) 194 skin joint area and the vertical fin spar caps for cracks or fretting. This action would require those same actions, but would update the type certificate holder names and add additional model helicopters to the applicability. This proposal is prompted by the need to update the current type certificate holders and to expand the applicability to additional military surplus helicopters, and expand the inspection to include corrosion and loose or working rivets. The actions specified by the proposed AD are intended to detect a crack in the skin of a tailboom assembly, tail rotor gearbox support fitting, or vertical fin spar, which could cause failure of the tailboom and loss of control of the helicopter.

DATES: Comments must be received on or before April 28, 2003.

ADDRESSES: Submit comments in triplicate to the Federal Aviation Administration (FAA), Office of the Regional Counsel, Southwest Region, Attention: Rules Docket No. 2002–SW–31–AD, 2601 Meacham Blvd., Room 663, Fort Worth, Texas 76137. You may also send comments electronically to the Rules Docket at the following address: *9-asw-adcomments@faa.gov.* Comments may be inspected at the Office of the Regional Counsel between 9 a.m. and 3 p.m., Monday through Friday, except Federal holidays.

FOR FURTHER INFORMATION CONTACT: Michael Kohner, Aviation Safety Engineer, FAA, Rotorcraft Directorate, Rotorcraft Certification Office, Fort Worth, Texas 76193–0170, telephone (817) 222–5447, fax (817) 222–5783.

SUPPLEMENTARY INFORMATION:

Comments Invited

Interested persons are invited to participate in the making of the proposed rule by submitting such written data, views, or arguments as they may desire. Communications should identify the Rules Docket number and be submitted in triplicate to the address specified above. All communications received on or before the closing date for comments will be considered before taking action on the proposed rule. The proposals contained in this document may be changed in light of the comments received.

Comments are specifically invited on the overall regulatory, economic, environmental, and energy aspects of the proposed rule. All comments submitted will be available, both before and after the closing date for comments, in the Rules Docket for examination by interested persons. A report summarizing each FAA-public contact concerned with the substance of this proposal will be filed in the Rules Docket.

Commenters wishing the FAA to acknowledge receipt of their mailed comments submitted in response to this proposal must submit a self-addressed, stamped postcard on which the following statement is made: ''Comments to Docket No. 2002–SW–31–AD.'' The postcard will be date stamped and returned to the commenter.

Discussion

On January 20, 1983, the FAA issued AD 83–03–03, Amendment 39–4556 (48 FR 6097, February 10, 1983), to require visually inspecting the tailboom skin and vertical fin front spar cap, radiographically inspecting the tailboom skin for cracks, and replacing cracked parts, if necessary. That action was prompted by an accident in January 1982 involving a Model UH–1B helicopter. An investigation revealed tailboom skin cracks, and a subsequent metallurgical examination revealed that the cracks were caused by structural fatigue. The requirements of that AD are intended to detect cracks and to prevent possible failure of the tailboom and fin.

Since issuing that AD, the FAA has determined that there is a need to expand the inspection to include corrosion and loose or working rivets, update the type certificate holder names, and add additional model helicopters to the applicability, specifically, the HH–1K, TH–1F, TH–1L, and the Southwest Florida Aviation Model SW204 and SW205 series helicopters.

The unsafe condition identified in this proposal is likely to exist or develop on other helicopters of the same type designs. Therefore, the proposed AD would supersede AD 83–03–03 to require:

- Within 30 hours time-in-service (TIS), and thereafter at intervals not to exceed 100 hours TIS, visually inspecting the BS 194 skin splice for fretting, corrosion, loose or working rivets, or a crack and visually inspecting the vertical fin forward spar caps for a crack where it intersects with the tail rotor gearbox support fitting.
- Before further flight and thereafter at intervals not to exceed 500 hours TIS, for a tailboom assembly found to have any fretting, corrosion, loose or working rivets, or a crack, or for a tailboom assembly with 1,000 or more hours TIS, radiographically inspecting the tailboom at the BS 194 splice joint. The radiographic inspection must be accomplished by an appropriately-rated person or facility authorized to perform this type of inspection. The radiographic inspection must be performed in accordance with the requirements of ASTM E 1742–00, MIL–STD–453C, or another FAA-accepted equivalent. MIL–STD–453C has been cancelled by the issuing agency, however, at this time, the FAA continues to accept its usage.
- Before further flight, replacing any part in which a crack is found, or repairing any corrosion or other damage that exceeds the limitations in the maintenance and overhaul manuals.

The FAA estimates that 75 helicopters of U.S. registry would be affected by this proposed AD, and that it would take approximately 4 work hours per helicopter to accomplish the visual inspections, and that the average labor rate is $60 per work hour. It is estimated that the cost of the radiographic inspection would be $850 per inspection for labor and materials. The total cost impact of this proposed AD is estimated to be $171,750 ($2,290 per helicopter each year), assuming 6 visual inspections and 1 radiographic inspection per year for each helicopter and no parts will need to be replaced.

The regulations proposed herein would not have a substantial direct

effect on the States, on the relationship between the national Government and the States, or on the distribution of power and responsibilities among the various levels of government. Therefore, it is determined that this proposal would not have federalism implications under Executive Order 13132.

For the reasons discussed above, I certify that this proposed regulation (1) is not a ''significant regulatory action'' under Executive Order 12866; (2) is not a ''significant rule'' under the DOT Regulatory Policies and Procedures (44 FR 11034, February 26, 1979); and (3) if promulgated, will not have a significant economic impact, positive or negative, on a substantial number of small entities under the criteria of the Regulatory Flexibility Act. A copy of the draft regulatory evaluation prepared for this action is contained in the Rules Docket. A copy of it may be obtained by contacting the Rules Docket at the location provided under the caption **ADDRESSES.**

List of Subjects in 14 CFR Part 39

Air transportation, Aircraft, Aviation safety, Safety.

The Proposed Amendment

Accordingly, pursuant to the authority delegated to me by the Administrator, the Federal Aviation Administration proposes to amend part 39 of the Federal Aviation Regulations (14 CFR part 39) as follows:

PART 39—AIRWORTHINESS DIRECTIVES

1. The authority citation for part 39 continues to read as follows:

Authority: 49 U.S.C. 106(g), 40113, 44701.

§ 39.13 [Amended]

2. Section 39.13 is amended by removing Amendment 39–4556 (48 FR 6097, February 10, 1983), and by adding a new airworthiness directive (AD), to read as follows:

Arrow Falcon Exporters, Inc. (previously Utah State University); Firefly Aviation Helicopter Services (previously Erickson Air-Crane Co.); Garlick Helicopters, Inc.; Global Helicopter Technology, Inc.; Hagglund Helicopters, LLC (previously Western International Aviation, Inc.); Hawkins and Powers Aviation, Inc.; International Helicopters, Inc.; Robinson Air Crane, Inc.; San Joaquin Helicopters (previously Hawkins and Powers Aviation, Inc.); S.M.&T. Aircraft (previously U.S. Helicopters, Inc.); Smith Helicopters; Southern Helicopter, Inc.; Southwest Florida Aviation; Tamarack Helicopters, Inc. (previously Ranger Helicopter Services, Inc.); U.S. Helicopter, Inc.; and Williams Helicopter Corporation (previously Scott Paper Co.): Docket No. 2002–SW–31–AD. Supersedes AD 83–03–03, Amendment 39–4556, Docket No. 82–ASW–54.

Applicability: Model HH–1K, TH–1F, TH–1L, UH–1A, UH–1B, UH–1E, UH–1F, UH–1H, UH–1L, and UH–1P; and Southwest Florida Aviation Model SW204, SW204HP, SW205, and SW205A–1 helicopters, manufactured by Bell Helicopter Textron, Inc. (BHTI) for the Armed Forces of the United States, certificated in any category.

Note 1: This AD applies to each helicopter identified in the preceding applicability provision, regardless of whether it has been otherwise modified, altered, or repaired in the area subject to the requirements of this AD. For helicopters that have been modified, altered, or repaired so that the performance of the requirements of this AD is affected, the owner/operator must request approval for an alternative method of compliance in accordance with paragraph (d) of this AD. The request should include an assessment of the effect of the modification, alteration, or repair on the unsafe condition addressed by this AD; and if the unsafe condition has not been eliminated, the request should include specific proposed actions to address it.

Compliance: Required as indicated, unless accomplished previously.

To detect a crack in the skin of a tailboom assembly, tail rotor gearbox support fitting, or vertical fin spar, which could cause failure of the tailboom and loss of control of the helicopter, accomplish the following:

(a) Within 30 hours time-in-service (TIS), and thereafter at intervals not to exceed 100 hours TIS:

(1) Visually inspect the tailboom assembly skin joint at Boom Station (BS) 194 for fretting, corrosion, loose or working rivets, or a crack. Inspect 10 inches forward and 10 inches aft of BS 194 (BS 194 skin joint area) as shown in the following Figure 1:

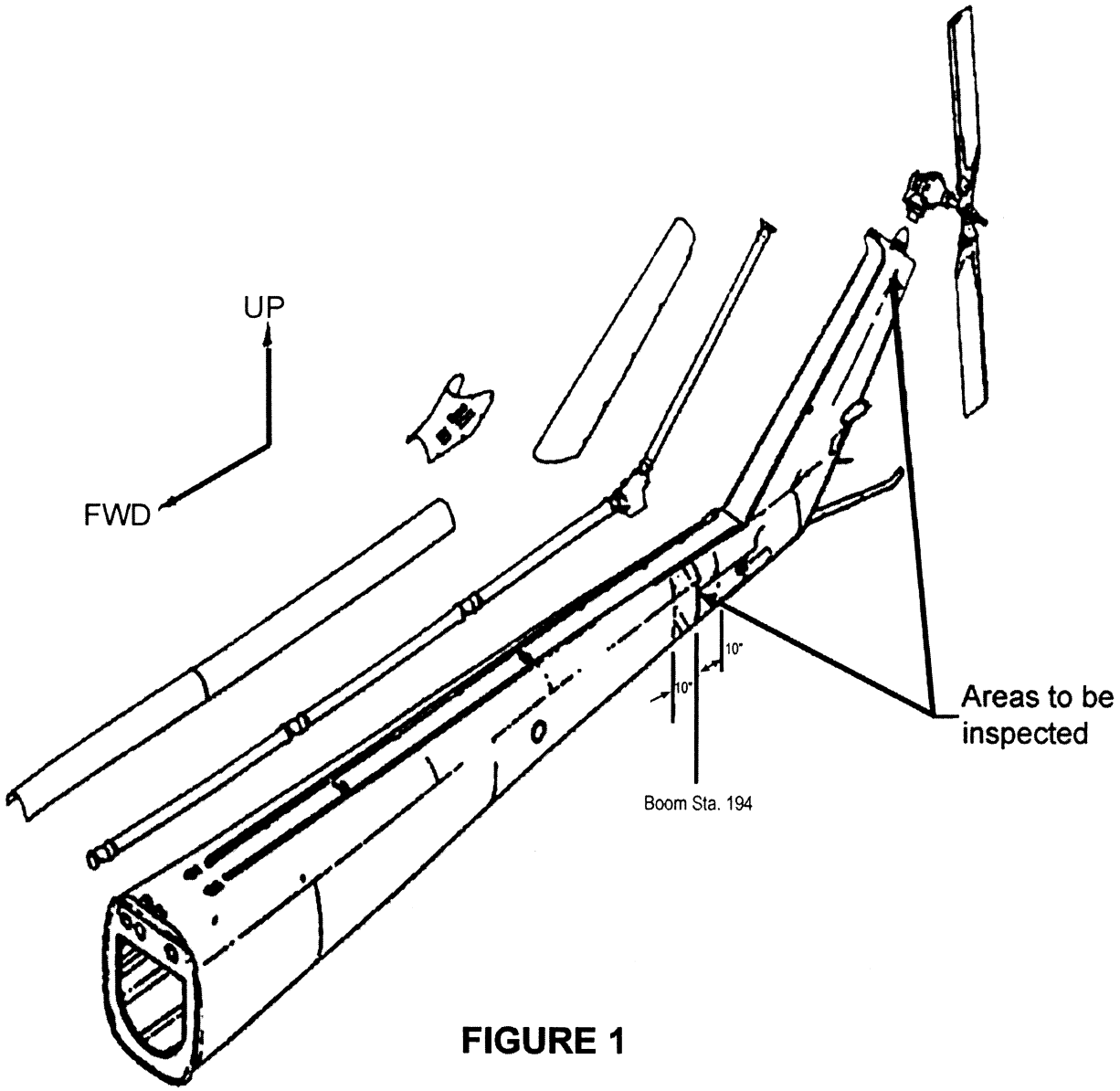

FIGURE 1

Note 2: The tailboom skin joint at BS 194 is located at the bulkhead just forward of the attachment area for the 42-degree tail rotor gearbox assembly (42-degree gearbox) and the intersection between the vertical fin forward canted bulkhead and the lower tailboom skin.

(2) Visually inspect the vertical fin forward spar caps (2) for a crack at the intersection with the tail rotor gearbox support fitting. Refer to Figure 1 of this AD.

(b) Before further flight, and thereafter at intervals not to exceed 500 hours TIS, radiographically inspect the BS 194 skin joint area in accordance with the requirements of ASTM E 1742–00, MIL–STD–453C, or another FAA-accepted equivalent, for any tailboom assembly with:

(1) Any fretting, corrosion, loose or working rivets, or a crack in the BS 194 skin joint area; or

(2) 1,000 or more hours TIS.

(c) If a crack is found in any part, replace it with an airworthy part before further flight. Repair any corrosion or other damage that exceeds the limitations in the maintenance or overhaul manuals before further flight.

(d) An alternative method of compliance or adjustment of the compliance time that provides an acceptable level of safety may be used if approved by the Manager, Rotorcraft Certification Office, Rotorcraft Directorate, FAA. Operators shall submit their requests through an FAA Principal Maintenance Inspector, who may concur or comment and then send it to the Manager, Rotorcraft Certification Office.

Note 3: Information concerning the existence of approved alternative methods of compliance with this AD, if any, may be obtained from the Rotorcraft Certification Office.

(e) Special flight permits may be issued in accordance with 14 CFR 21.197 and 21.199 to operate the helicopter to a location where the requirements of this AD can be accomplished.

Issued in Fort Worth, Texas, on February 6, 2003.

David A. Downey,

Manager, Rotorcraft Directorate, Aircraft Certification Service.

[FR Doc. 03–4480 Filed 2–25–03; 8:45 am]

BILLING CODE 4910–13–P

DEPARTMENT OF TRANSPORTATION

Federal Aviation Administration

14 CFR Part 39

[Docket No. 2002–SW–25–AD]

RIN 2120–AA64

Airworthiness Directives; Schweizer Aircraft Corporation Model 269A, 269A–1, 269B, 269C, and TH–55A Helicopters

AGENCY: Federal Aviation Administration, DOT.

ACTION: Notice of proposed rulemaking (NPRM).

SUMMARY: This document proposes the supersedure of an existing airworthiness directive (AD) that applies to Schweizer Aircraft Corporation (Schweizer) Model 269A, 269A–1, 269B, 269C, and TH–55A helicopters. That AD currently requires inspecting the lugs on certain aft cluster fittings, and each aluminum end fitting on certain tailboom struts. Modifying or replacing each strut assembly within a specified time period and serializing certain strut assemblies are also required by the existing AD. This proposed AD would require the same actions as the existing AD, would require a one-time inspection and repair, if necessary, of certain additional cluster fittings, and would require replacement and modification of certain cluster fittings within 150 hours time-in-service (TIS) or 6 months, whichever occurs first. This proposal is prompted by the need to expand the applicability to include certain Hughes-manufactured cluster fittings and to provide a terminating action for the repetitive-dye-penetrant inspections of the cluster fittings. The actions specified by the proposed AD are intended to prevent failure of a tailboom support strut or a cluster fitting, which could cause rotation of a tailboom into the main rotor blades, and subsequent loss of control of the helicopter.

DATES: Comments must be received on or before April 28, 2003.

ADDRESSES: Submit comments in triplicate to the Federal Aviation Administration (FAA), Office of the Regional Counsel, Southwest Region, Attention: Rules Docket No. 2002–SW–25–AD, 2601 Meacham Blvd., Room 663, Fort Worth, Texas 76137. You may also send comments electronically to the Rules Docket at the following address: *9–asw–adcomments@faa.gov.* Comments may be inspected at the Office of the Regional Counsel between 9 a.m. and 3 p.m., Monday through Friday, except Federal holidays.

FOR FURTHER INFORMATION CONTACT: George Duckett, Aviation Safety Engineer, FAA, New York Aircraft Certification Office, Airframe and Propulsion Branch, 10 Fifth Street, 3rd Floor, Valley Stream, New York, telephone (516) 256–7525, fax (516) 568–2716.

SUPPLEMENTARY INFORMATION:

Comments Invited

Interested persons are invited to participate in the making of the proposed rule by submitting such written data, views, or arguments as they may desire. Communications should identify the Rules Docket number and be submitted in triplicate to the address specified above. All communications received on or before the closing date for comments will be considered before taking action on the proposed rule. The proposals contained in this document may be changed in light of the comments received.

Comments are specifically invited on the overall regulatory, economic, environmental, and energy aspects of the proposed rule. All comments submitted will be available, both before and after the closing date for comments, in the Rules Docket for examination by interested persons. A report summarizing each FAA-public contact concerned with the substance of this proposal will be filed in the Rules Docket.

Commenters wishing the FAA to acknowledge receipt of their mailed comments submitted in response to this proposal must submit a self-addressed, stamped postcard on which the following statement is made: ''Comments to Docket No. 2002–SW–25–AD.'' The postcard will be date stamped and returned to the commenter.

Discussion

On April 12, 2002, the FAA issued AD 2001–25–52, Amendment 39–12726 (67 FR 19646, April 23, 2002), to require the following:

- Within 10 hours TIS and thereafter at intervals not to exceed 50 hours TIS, dye-penetrant inspect and replace, if necessary, each cluster fitting, part number (P/N) 269A2234 and P/N 269A2235;
- At intervals not to exceed 50 hours TIS, visually inspect the strut aluminum end fittings for deformation or damage, dye-penetrant inspect the strut aluminum end fittings for a crack, and replace deformed, damaged, or cracked parts.
- Within 500 hours TIS or one year, whichever occurs first, modify or replace the strut assemblies.
- Within 100 hours TIS, for Model 269C helicopters, serialize each strut assembly, P/N 269A2015–5 and 269A2015–11.

That action was prompted by an accident in the United Kingdom involving the in-flight structural failure of a Model 269C helicopter. The requirements of that AD are intended to prevent failure of a lug on a cluster fitting, which could result in rotation of a tailboom into the main rotor blades, and subsequent loss of control of the helicopter. The existing AD, which superseded AD 76–18–01 (41 FR 37093, September 2, 1976), includes a reference to inspecting the center attachment fitting. However, AD 93–21–03 (58 FR 59944, November 12, 1993), Docket 91–ASW–11, addressed the unsafe conditions of the center attachment fitting and it is unnecessary to further address those issues in this proposed AD.

Since the issuance of the existing AD, the FAA has determined that the pool of cluster fittings that needs inspecting should be expanded to include certain Hughes-manufactured cluster fittings that were inadvertently omitted from the applicability of the existing AD because of the failure to include Hughes-manufactured P/N's, 269A2234–3 and 269A2235–3, in the applicability. Also, the manufacturer has completed the development of a modification kit for the cluster fitting that can serve as a terminating action for the repetitive 50-hour TIS dye-penetrant inspection.

The unsafe condition described previously is likely to exist or develop on other helicopters of the same type designs. Therefore, the proposed AD would supersede AD 2001–25–52 to require the following:

- Within 10 hours TIS and thereafter at intervals not to exceed 50 hours TIS, dye-penetrant inspect the lugs and replace any cracked cluster fitting.
- Within 150 hours TIS or 6 months, whichever occurs first, replace or modify, using kit, P/N SA–269K–106–1, each cluster fitting, P/N 269A2234 and P/N 269A2235.
- For strut assemblies, P/N 269A2015 or P/N 269A2015–5, at intervals not to exceed 50 hours TIS, visually inspect the strut aluminum end fittings for deformation or damage, dye-penetrant inspect the strut aluminum end fittings for a crack, and replace deformed, damaged, or cracked parts. Within 500 hours TIS or one year, whichever occurs first, modify or replace certain part-numbered strut assemblies.
- Within 100 hours TIS, for Model 269C helicopters, serialize each strut

assembly, P/N 269A2015–5 and 269A2015–11.

• Within 25 hours TIS or 60 days, whichever occurs first, inspect and repair cluster fittings, P/N 269A2234–3 and P/N 269A2235–3.

• Before further flight, replace any cluster fitting that is cracked or has a surface defect beyond rework limits.

The FAA estimates that 1,000 helicopters of U.S. registry would be affected by this proposed AD. It would take approximately 2.5 work hours for each dye-penetrant inspection, 12 work hours to replace one cluster fitting, 4 work hours to modify or replace the strut assembly, 0.25 work hours to serialize the strut assembly, and 16 work hours to modify a cluster fitting. The average labor rate is $60 per work hour. Required parts would cost approximately $5 for each fitting inspection, $1,635 to replace a cluster fitting, $1,500 to modify or replace the strut assembly, and $1,688 for each cluster fitting modification kit (2 fittings). Based on these figures, the total cost impact of the proposed AD on U.S. operators is estimated to be $2,260,320 (assuming 2,000 cluster fittings are inspected, 50 cluster fittings are replaced, 6 strut assemblies are modified or replaced, 6 strut assemblies are serialized, and 1,010 cluster fittings are modified).

The regulations proposed herein would not have a substantial direct effect on the States, on the relationship between the national Government and the States, or on the distribution of power and responsibilities among the various levels of government. Therefore, it is determined that this proposal would not have federalism implications under Executive Order 13132.

For the reasons discussed above, I certify that this proposed regulation (1) is not a ''significant regulatory action'' under Executive Order 12866; (2) is not a ''significant rule'' under the DOT Regulatory Policies and Procedures (44 FR 11034, February 26, 1979); and (3) if promulgated, will not have a significant economic impact, positive or negative, on a substantial number of small entities under the criteria of the Regulatory Flexibility Act. A copy of the draft regulatory evaluation prepared for this action is contained in the Rules Docket. A copy of it may be obtained by contacting the Rules Docket at the location provided under the caption **ADDRESSES.**

List of Subjects in 14 CFR Part 39

Air transportation, Aircraft, Aviation safety, Safety.

The Proposed Amendment

Accordingly, pursuant to the authority delegated to me by the Administrator, the Federal Aviation Administration proposes to amend part 39 of the Federal Aviation Regulations (14 CFR part 39) as follows:

PART 39—AIRWORTHINESS DIRECTIVES

1. The authority citation for part 39 continues to read as follows:

Authority: 49 U.S.C. 106(g), 40113, 44701.

§ 39.13 [Amended]

2. Section 39.13 is amended by removing Amendment 39–12726 (67 FR 19646, April 23, 2002), and by adding a new airworthiness directive (AD), to read as follows:

Schweizer Aircraft Corporation: Docket No. 2002–SW–25–AD. Supersedes AD 2001–25–52, Amendment 39–12726, Docket No. 2001–SW–58–AD.

Applicability: Model 269A, 269A–1, 269B, 269C, and TH–55A helicopters, certificated in any category, with a tailboom support strut (strut) assembly, part number (P/N) 269A2015 or 269A2015–5; or with a center frame aft cluster fitting, P/N 269A2234 or 269A2235, and an aft cluster fitting listed in the following table:

Helicopter model number	Helicopter serial number	With aft cluster fitting, P/N
Model 269C	0570 through 1165	269A2234–3
Model 269C	0500 through 1165	269A2235–3
Model 269A, A–1, B, or C, or TH–55A	All	269A2234–3 or 269A2235–3

Exception: For the Model 269A, A–1, B, or C or TH–55A helicopters with Hughes-manufactured cluster fittings, P/N 269A2234–3 or P/N 269A2235–3, installed, if there is written documentation in the aircraft or manufacturer's records that shows the cluster fitting was originally sold by Hughes after June 1, 1988, the requirements of this AD are not applicable.

Note 1: This AD applies to each helicopter identified in the preceding applicability provision, regardless of whether it has been otherwise modified, altered, or repaired in the area subject to the requirements of this AD. For helicopters that have been modified, altered, or repaired so that the performance of the requirements of this AD is affected, the owner/operator must request approval for an alternative method of compliance in accordance with paragraph (h) of this AD. The request should include an assessment of the effect of the modification, alteration, or repair on the unsafe condition addressed by this AD; and if the unsafe condition has not been eliminated, the request should include specific proposed actions to address it.

Compliance: Required as indicated, unless accomplished previously.

To prevent failure of a tailboom support strut or lug on a cluster fitting, which could cause rotation of a tailboom into the main rotor blades, and subsequent loss of control of the helicopter, accomplish the following:

(a) Within 10 hours time-in-service (TIS), and thereafter at intervals not to exceed 50 hours TIS, for helicopters with cluster fittings, P/N 269A2234 or P/N 269A2235:

(1) Using paint remover, remove paint from the lugs on each cluster fitting. Wash with water and dry. The tailboom support strut must be removed prior to the paint stripping.

(2) Dye-penetrant inspect the lugs on each cluster fitting. See the following Figure 1:

BILLING CODE 4910–13–P

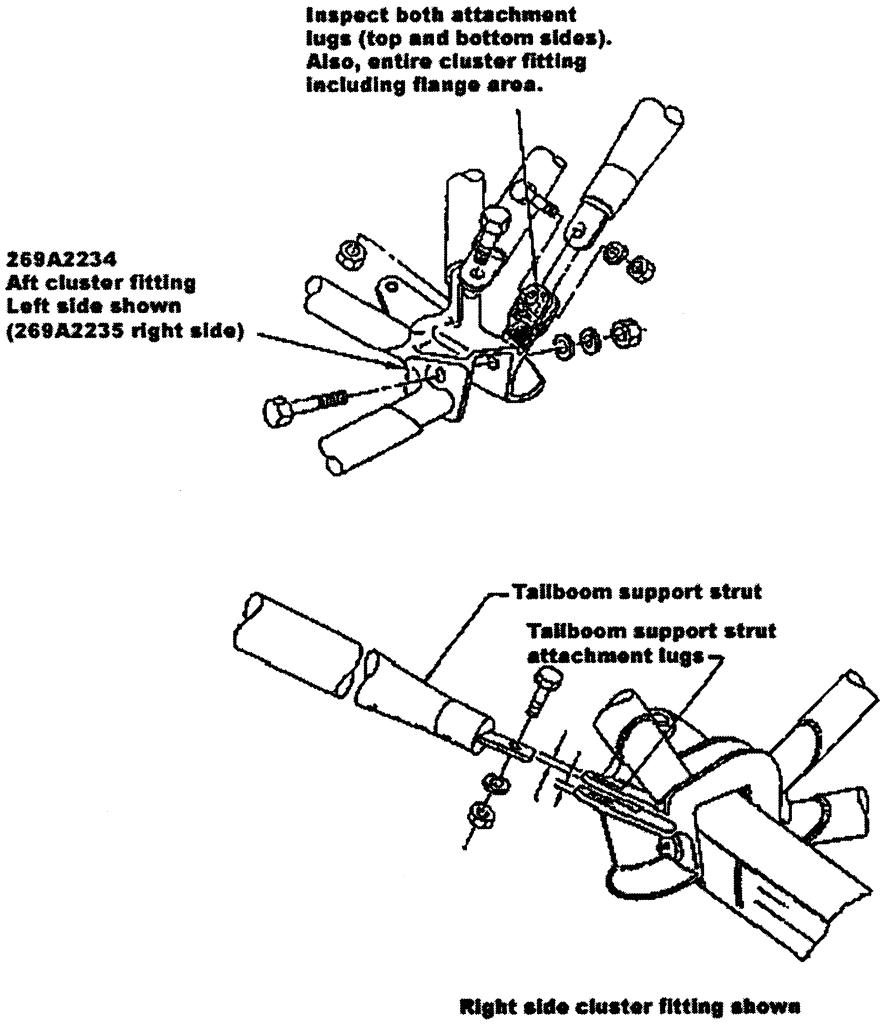

Figure 1

BILLING CODE 4910–13–C

(3) If a crack is found, before further flight, replace the cracked cluster fitting with an airworthy cluster fitting.

(b) Cluster fittings, P/N 269A2234 and P/N 269A2235, that have NOT been modified with Kit P/N SA–269K–106–1, are NOT eligible replacement parts.

(c) Within 150 hours TIS or 6 months, whichever occurs first, replace each cluster fitting, P/N 269A2234 and P/N 269A2235, with an airworthy cluster fitting or modify each cluster fitting, P/N 269A2234 and P/N 269A2235, with Kit, P/N SA–269K–106–1. Installing the kit is terminating action for the 50-hour TIS repetitive dye-penetrant inspection for these cluster fittings. Broken or cracked cluster fittings are not eligible for the kit modification.

(d) For helicopters with strut assemblies, P/N 269A2015 or 269A2015–5, accomplish the following:

(1) At intervals not to exceed 50 hours TIS:

(i) Remove the strut assemblies, P/N 269A2015 or P/N 269A2015–5.

(ii) Visually inspect the strut aluminum end fittings for deformation or damage and dye-penetrant inspect the strut aluminum end fittings for a crack in accordance with Step II of Schweizer Service Information Notice No. N–109.2, dated September 1, 1976 (SIN N–109.2).

(iii) If deformation, damage, or a crack is found, before further flight, modify the strut assemblies by replacing the aluminum end fittings with stainless steel end fittings, P/N 269A2017–3 and –5, and attach bolts in accordance with Step III of SIN N–109.2; or replace each strut assembly P/N 269A2015 with P/N 269A2015–9, and replace each strut assembly P/N 269A2015–5 with P/N 269A2015–11.

(2) Within 500 hours TIS or one year, whichever occurs first, modify or replace the strut assemblies in accordance with paragraph (d)(1)(iii) of this AD.

(e) For the Model 269C helicopters, within 100 hours TIS, serialize each strut assembly, P/N 269A2015–5 and P/N 269A2015–11, in accordance with Schweizer Service Information Notice No. N–108, dated May 21, 1973.

(f) Within 25 hours TIS or 60 days, whichever occurs first, for cluster fittings, P/N 269A2234–3 and P/N 269A2235–3, perform a one-time inspection and repair, if required, in accordance with Procedures, Part II of Schweizer Service Bulletin No. B–277, dated January 25, 2002.

(g) Before further flight, replace any cluster fitting that is cracked or has surface defects

beyond rework limits with an airworthy cluster fitting.

(h) An alternative method of compliance or adjustment of the compliance time that provides an acceptable level of safety may be used if approved by the Manager, New York Aircraft Certification Office (NYACO), FAA. Operators shall submit their requests through an FAA Principal Maintenance Inspector, who may concur or comment and then send it to the Manager, NYACO.

Note 2: Information concerning the existence of approved alternative methods of compliance with this AD, if any, may be obtained from the NYACO.

(i) Special flight permits may be issued in accordance with 14 CFR 21.197 and 21.199 to operate the helicopter to a location where the requirements of this AD can be accomplished.

Issued in Fort Worth, Texas, on February 18, 2003.

Eric D. Bries,

Manager, Rotorcraft Directorate, Aircraft Certification Service.

[FR Doc. 03–4479 Filed 2–25–03; 8:45 am]

BILLING CODE 4910–13–P

DEPARTMENT OF THE TREASURY

Internal Revenue Service

26 CFR Part 1

[REG–124069–02]

RIN 1545–BA77

Section 6038—Returns Required With Respect to Controlled Foreign Partnerships

AGENCY: Internal Revenue Service (IRS), Treasury.

ACTION: Cancellation of notice of public hearing on proposed rulemaking.

SUMMARY: This document cancels the public hearing on proposed regulations relating to controlled foreign partnerships.

DATES: The public hearing originally scheduled for Wednesday, March 12, 2003, at 10 a.m., is cancelled.

FOR FURTHER INFORMATION CONTACT: LaNita Van Dyke of the Regulations Unit, Assistant Chief Counsel (Procedure and Administration), (202) 622–7190 (not a toll-free number).

SUPPLEMENTARY INFORMATION: A notice of proposed rulemaking and notice of public hearing that appeared in the **Federal Register** on Monday, December 23, 2002 (67 FR 78202), announced that a public hearing was scheduled for Wednesday, March 12, 2003, at 10 a.m., in room 4718, Internal Revenue Building, 1111 Constitution Avenue, NW., Washington, DC. The subject of the public hearing is proposed regulations under section 6038 of the Internal Revenue Code. The outlines of topics to be addressed at the hearing were due on Wednesday, February 20, 2003.

The notice of proposed rulemaking and notice of public hearing, instructed those interested in testifying at the public hearing to submit a request to speak and an outline of the topics to be addressed. As of Friday, February 21, 2003, no one has requested to speak. Therefore, the public hearing scheduled for Wednesday, March 12, 2003, is cancelled.

Cynthia Grigsby,

Chief, Regulations Unit, Associate Chief Counsel (Procedure and Administration).

[FR Doc. 03–4545 Filed 2–25–03; 8:45 am]

BILLING CODE 4830–01–P

DEPARTMENT OF THE TREASURY

Internal Revenue Service

26 CFR Part 1

[REG–127380–02]

RIN 1545–BA79

Outbound Liquidations to Foreign Corporations; Hearing Cancellation

AGENCY: Internal Revenue Service (IRS), Treasury.

ACTION: Cancellation of notice of public hearing on proposed rulemaking.

SUMMARY: This document provides notice of cancellation of a public hearing on proposed regulations relating to outbound liquidations to foreign corporations under section 367 of the Internal Revenue Code.

DATES: The public hearing originally scheduled for Tuesday, March 4, 2003, at 10 a.m., is cancelled.

FOR FURTHER INFORMATION CONTACT: Guy R. Traynor of the Regulations Unit, Associate Chief Counsel, Procedure & Administration, at (202) 622–7180 (not a toll-free number).

SUPPLEMENTARY INFORMATION: A notice of proposed rulemaking and notice of public hearing that appeared in the **Federal Register** on Wednesday, November 20, 2002 (67 FR 70031), announced that a public hearing was scheduled for March 3, 2003 at 10 a.m., in room 4718 of the Internal Revenue Building, 1111 Constitution Avenue NW., Washington, DC. The subject of the public hearing is proposed regulations under section 367 of the Internal Revenue Code. The public comment period for these proposed regulations expired on February 11, 2003.

The notice of proposed rulemaking and notice of public hearing instructed those interested in testifying at the public hearing to submit a request to speak and an outline of the topics to be addressed. As of February 21, 2003, no one has requested to speak. Therefore, the public hearing scheduled for March 3, 2003 is cancelled.

Cynthia E. Grigsby,

Chief, Regulations Unit, Associate Chief Counsel (Procedure and Administration).

[FR Doc. 03–4544 Filed 2–25–03; 8:45 am]

BILLING CODE 4830–01–P

ENVIRONMENTAL PROTECTION AGENCY

40 CFR Part 52

[CA262–0369b; FRL–7451–5]

Revisions to the California State Implementation Plan, Monterey Bay Unified Air Pollution Control District, San Joaquin Valley Unified Air Pollution Control District

AGENCY: Environmental Protection Agency (EPA).

ACTION: Proposed rule.

SUMMARY: EPA is proposing to approve revisions to the Monterey Bay Unified Air Pollution Control District (MBUAPCD) and San Joaquin Valley Unified Air Pollution Control District (SJVUAPCD) portions of the California State Implementation Plan (SIP). These revisions concern volatile organic compound (VOC) emissions from organic liquid storage and VOC and nitrogen dioxide (Nox) from flare operations at industrial sites such as oil refineries, chemical manufacturers, and oil wells. We are proposing to approve local rules to regulate these emission sources under the Clean Air Act as amended in 1990 (CAA or the Act).

DATES: Any comments on this proposal must arrive by March 28, 2003.

ADDRESSES: Mail comments to Andy Steckel, Rulemaking Office Chief (AIR–4), U.S. Environmental Protection Agency, Region IX, 75 Hawthorne Street, San Francisco, CA 94105–3901.

You can inspect copies of the submitted SIP revisions and EPA's technical support documents (TSDs) at our Region IX office during normal business hours. You may also see copies of the submitted SIP revisions at the following locations:

California Air Resources Board, Stationary Source Division, Rule

Evaluation Section, 1001 ''I'' Street, Sacramento, CA 95814;

Monterey Bay Unified Air Pollution Control District, 24580 Silver Cloud Court, Monterey, CA 93940; and,

San Joaquin Valley Unified Air Pollution Control District, 1990 East Gettysburg Street, Fresno, CA 93726.

A copy of the rule may also be available via the Internet at *http://www.arb.ca.gov/drdb/drdbltxt.htm*. Please be advised that this is not an EPA website and may not contain the same version of the rule that was submitted to EPA.

FOR FURTHER INFORMATION CONTACT: Jerald S. Wamsley, EPA Region IX, (415) 947–4111.

SUPPLEMENTARY INFORMATION: This proposal addresses the following local rules: MBUAPCD 417–Storage of Organic Liquids and SJVUAPCD 4311–Flares. In the Rules and Regulations section of this **Federal Register**, we are approving these local rules in a direct final action without prior proposal because we believe these SIP revisions are not controversial. If we receive adverse comments, however, we will publish a timely withdrawal of the direct final rule and address the comments in subsequent action based on this proposed rule. Please note that if we receive adverse comment on an amendment, paragraph, or section of this rule and if that provision may be severed from the remainder of the rule, we may adopt as final those provisions of the rule that are not the subject of an adverse comment.

We do not plan to open a second comment period, so anyone interested in commenting should do so at this time. If we do not receive adverse comments, no further activity is planned. For further information, please see the direct final action.

Dated: December 6, 2002.

Alexis Strauss,

Acting Regional Administrator, Region IX.

[FR Doc. 03–4382 Filed 2–25–03; 8:45 am]

BILLING CODE 6560–50–P

ENVIRONMENTAL PROTECTION AGENCY

40 CFR Part 52

[CA 264–0388; FRL–7455–1]

Revisions to the California State Implementation Plan, Ventura County Air Pollution Control District

AGENCY: Environmental Protection Agency (EPA).

ACTION: Proposed rule.

SUMMARY: EPA is proposing to approve revisions to the Ventura County Air Pollution Control District (VCAPCD) portion of the California State Implementation Plan (SIP). These revisions concern oxides of nitrogen (NO_X) emissions from stationary gas turbines. We are proposing to approve a local rule to regulate these emission sources under the Clean Air Act as amended in 1990 (CAA or the Act). We are taking comments on this proposal and plan to follow with a final action.

DATES: Any comments must arrive by March 28, 2003.

ADDRESSES: Mail comments to Andy Steckel, Rulemaking Office Chief (AIR–4), U.S. Environmental Protection Agency, Region IX, 75 Hawthorne Street, San Francisco, CA 94105–3901.

You can inspect copies of the submitted SIP revisions and EPA's technical support document (TSD) at our Region IX office during normal business hours. You may also see copies of the submitted SIP revisions at the following locations: California Air Resources Board, Stationary Source Division, Rule Evaluation Section, 1001 ''I'' Street, Sacramento, CA 95814. Ventura County Air Pollution Control District, 669 County Square Drive, Ventura, California 93003.

A copy of the rule may also be available via the Internet at *http://www.arb.ca.gov/drdb/drdbltxt.htm.* Please be advised that this is not an EPA Web site and may not contain the same version of the rule that was submitted to EPA.

FOR FURTHER INFORMATION CONTACT: Charnjit Bhullar, EPA Region IX, (415)972–3960.

SUPPLEMENTARY INFORMATION: Throughout this document, ''we,'' ''us'' and ''our'' refer to EPA.

Table of Contents

I. The State's Submittal
A. What rule did the State submit?
B. Are there other versions of this rule?
C. What is the purpose of the submitted rule revisions?
II. EPA's Evaluation and Action
A. How is EPA evaluating this rule?
B. Does this rule meet the evaluation criteria?
C. Public comment and final action.
III. Background Information
Why was this rule submitted?
IV. Statutory and Executive Order Reviews

I. The State's Submittal

A. What Rule Did the State Submit?

Table 1 lists the rule addressed by this proposal with the date that it was adopted by local air agency and submitted by the California Air Resources Board (CARB).

TABLE 1.—SUBMITTED RULES

Local Agency	Rule #	Rule Title	Adopted	Submitted
VCAPCD	74.23	Stationary Gas Turbines	01/08/02	03/15/02

On May 7, 2002, this rule submittal was found to meet the completeness criteria in 40 CFR part 51, appendix V, which must be met before formal EPA review.

B. Are There Other Versions of This Rule?

VCAPCD adopted an earlier version of this rule on October 10, 1995, and CARB submitted it to us on March 26, 1996. We published approval of this previous version of rule 74.23 into the SIP on January 22, 1997 (14 FR 3220). VCAPCD adopted revisions to the SIP-approved version on June 12, 2001 and CARB submitted to us on October 30, 2001. While we can only act on the most recently submitted version, we have reviewed material associated with previous submittals.

C. What Is the Purpose of the Submitted Rule Revisions?

Rule 74.23 applies to all stationary gas turbines with a rating equal to or greater than 0.3 megawatts (MW) output and operated on gaseous and/or liquid fuel. Stationary gas turbines in Ventura County are used as cogeneration units to generate electricity and supply heat for industrial processes, or as electric generators, and/or as primemovers of equipment used in the oil production industry. The primary purpose of the rule revisions is to slightly modify two emission limits.

The TSD has more information about this rule.

II. EPA's Evaluation and Action

A. How Is EPA Evaluating This Rule?

Generally, SIP rules must be enforceable (*see* section 110(a) of the Act), must require Reasonably Available Control Technology (RACT) for major sources in nonattainment areas (see section 182(a)(2)(A), 182(f) and 189(a)), and must not relax existing requirements (*see* sections 110(l) and 193). The VCAPCD regulates an ozone nonattainment area (*see* 40 CFR part 81), so Rule 74.23 must fulfill RACT.

Guidance and policy documents that we used to help evaluate enforceability and RACT requirements consistently include the following:

1. Issue Relating to VOC Regulation, Cut points, Deficiencies, and Deviations (the Blue Book), U.S. EPA, May 25, 1988.
2. ''Guidance Document for Correcting VOC Rule Deficiencies'', U.S. EPA Region 9, August 21, 2001 (the little bluebook).
3. State Implementation Plans: Nitrogen Oxides Supplement to the General Preamble for the Implementation of Title I of the Clean Air Act Amendment of 1990 (the ''NO_X Supplement to the General Preamble''), U.S. EPA, 57 FR 55620, November 25, 1992.
4. Requirements for Preparation, Adoption, and Submittal of Implementation Plans, U.S. EPA, 40 CFR part 51.
5. State Implementation Plans for National Primary and Secondary Ambient Air Quality Standards, Section 110 of the Clean Air Act, and Plan Requirements for Nonattainment Areas, Title I Part D of the Clean Air Act.
6. Determination of Reasonably Available Control Technology and Best Available Retrofit Control Technology for the Control of Oxides of Nitrogen From Stationary Gas Turbines, State of California Air Resources Board, May 18, 1992.
7. Alternative Control Techniques (ACT) Document, NO_X Emissions from Stationary Gas Turbines, U.S. EPA, January 1993, EPA–453/R–93–007.
8. Cost Effective Nitrogen Oxides (NO_X) Reasonably Available Control Technology (RACT), U.S. EPA Office of Air Quality Planning and Standards, March 16, 1994.

B. Does This Rule Meet the Evaluation Criteria?

The substantive revisions to the rule were relaxation of the NO_X emission limit in section B.5 from 20 ppmv to 24 ppmv for LM–2500 turbines, and the strengthening of the limit in section B.6 from 9 ppmv to 6.8 ppmv for LM–5000 turbines. We believe these changes result in a net decrease and that this rule is consistent with the relevant policy and guidance regarding enforceability, RACT, and SIP relaxations. The TSD has more information on our evaluation.

C. Public Comment and Final Action

Because EPA believes the submitted rule fulfill all relevant requirements, we are proposing to fully approve it as described in section 110(k)(3) of the Act. We will accept comments from the public on this proposal for the next 30 days. Unless we receive convincing new information during the comment period, we intend to publish a final approval action that will incorporate this rule into the federally enforceable SIP.

III. Background Information

Why Was This Rule Submitted?

NO_X helps produce ground-level ozone, smog and particulate matter, which harm human health and the environment. Section 110(a) of the CAA requires states to submit regulations that control NO_X emissions. Table 2 lists some of the national milestones leading to the submittal of this local agency NO_X rule.

TABLE 2.—OZONE NONATTAINMENT MILESTONES

Date	Event
March 3, 1978	EPA promulgated a list of ozone nonattainment areas under the Clean Air Act as amended in 1977. 43 FR 8964; 40 CFR 81.305.
May 26, 1988	EPA notified Governors that parts of their SIPs were inadequate to attain and maintain the ozone standard and requested that they correct the deficiencies (EPA's SIP–Call). See section 110(a)(2)(H) of the pre-amended Act.
November 15, 1990	Clean Air Act Amendments of 1990 were enacted. Pub. L. 101–549, 104 Stat. 2399, codified at 42 U.S.C. 7401–7671q.
May 15, 1991	Section 182(a)(2)(A) requires that ozone nonattainment areas correct deficient RACT rules by this date.

IV. Statutory and Executive Order Reviews

Under Executive Order 12866 (58 FR 51735, October 4, 1993), this proposed action is not a ''significant regulatory action'' and therefore is not subject to review by the Office of Management and Budget. For this reason, this action is also not subject to Executive Order 13211, ''Actions Concerning Regulations That Significantly Affect Energy Supply, Distribution, or Use'' (66 FR 28355, May 22, 2001). This proposed action merely proposes to approve state law as meeting Federal requirements and imposes no additional requirements beyond those imposed by state law. Accordingly, the Administrator certifies that this proposed rule will not have a significant economic impact on a substantial number of small entities under the Regulatory Flexibility Act (5 U.S.C. 601 *et seq.*). Because this rule proposes to approve pre-existing requirements under state law and does not impose any additional enforceable duty beyond that required by state law, it does not contain any unfunded mandate or significantly or uniquely affect small governments, as described in the Unfunded Mandates Reform Act of 1995 (Public Law 104–4).

This proposed rule also does not have tribal implications because it will not have a substantial direct effect on one or more Indian tribes, on the relationship between the Federal Government and Indian tribes, or on the distribution of power and responsibilities between the Federal Government and Indian tribes, as specified by Executive Order 13175 (65 FR 67249, November 9, 2000). This action also does not have Federalism implications because it does not have substantial direct effects on the States, on the relationship between the national government and the States, or on the distribution of power and responsibilities among the various levels of government, as specified in Executive Order 13132 (64 FR 43255, August 10, 1999). This action merely proposes to approve a state rule implementing a Federal standard, and does not alter the relationship or the distribution of power and responsibilities established in the Clean Air Act. This proposed rule also is not subject to Executive Order 13045 ''Protection of Children from Environmental Health Risks and Safety Risks'' (62 FR 19885, April 23, 1997), because it is not economically significant.

In reviewing SIP submissions, EPA's role is to approve state choices, provided that they meet the criteria of the Clean Air Act. In this context, in the

absence of a prior existing requirement for the State to use voluntary consensus standards (VCS), EPA has no authority to disapprove a SIP submission for failure to use VCS. It would thus be inconsistent with applicable law for EPA, when it reviews a SIP submission, to use VCS in place of a SIP submission that otherwise satisfies the provisions of the Clean Air Act. Thus, the requirements of section 12(d) of the National Technology Transfer and Advancement Act of 1995 (15 U.S.C. 272 *note*) do not apply. This proposed rule does not impose an information collection burden under the provisions of the Paperwork Reduction Act of 1995 (44 U.S.C. 3501 *et seq.*).

List of Subjects in 40 CFR Part 52

Environmental protection, Air pollution control, Intergovernmental relations, Nitrogen dioxide, Ozone, Reporting and recordkeeping requirements.

Authority: 42 U.S.C. 7401 *et seq.*

Dated: February 7, 2003.

Alexis Strauss,

Acting Regional Administrator, Region IX.

[FR Doc. 03–4514 Filed 2–25–03; 8:45 am]

BILLING CODE 6560–50–P

ENVIRONMENTAL PROTECTION AGENCY

40 CFR Part 52

[CA273–0381b; FRL–7452–4]

Revisions to the California State Implementation Plan, Imperial County Air Pollution Control District

AGENCY: Environmental Protection Agency (EPA).

ACTION: Proposed rule.

SUMMARY: EPA is proposing to approve a revision to the Imperial County Air Pollution Control District (ICAPCD) portion of the California State Implementation Plan (SIP). This revision concerns particulate matter (PM) emissions livestock feed yard operations. We are proposing to approve this local rule regulating these emission sources under the Clean Air Act as amended in 1990 (CAA or the Act).

DATES: Any comments on this proposal must arrive by March 28, 2003.

ADDRESSES: Mail comments to Andy Steckel, Rulemaking Office Chief (AIR–4), U.S. Environmental Protection Agency, Region IX, 75 Hawthorne Street, San Francisco, CA 94105–3901.

You can inspect copies of the submitted SIP revision and EPA's technical support document (TSD) at our Region IX office during normal business hours. You may also see copies of the submitted SIP revisions at the following locations:

California Air Resources Board, Stationary Source Division, Rule Evaluation Section, 1001 ''I'' Street, Sacramento, CA 95814; and,

Imperial County Air Pollution Control District, 150 South 9th Street, El Centro, CA 92243.

FOR FURTHER INFORMATION CONTACT: Jerald S. Wamsley, Rulemaking Office (Air-4), U.S. Environmental Protection Agency, Region IX, (415) 947–4111.

SUPPLEMENTARY INFORMATION: This proposal addresses ICAPCD Rule 420—Livestock Feedyards. In the Rules and Regulations section of this **Federal Register**, we are approving this local rule in a direct final action without prior proposal because we believe this SIP revision is not controversial. However, if we receive adverse comments, we will publish a timely withdrawal of the direct final rule and address the comments in subsequent action based on this proposed rule. We do not plan to open a second comment period, so anyone interested in commenting should do so at this time. If we do not receive adverse comments, no further activity is planned. For further information, please see the direct final action.

Dated: February 3, 2003.

Alexis Strauss,

Acting Regional Administrator, Region IX.

[FR Doc. 03–4377 Filed 2–25–03; 8:45 am]

BILLING CODE 6560–50–P

ENVIRONMENTAL PROTECTION AGENCY

40 CFR Part 52

[KS 173–1173; FRL–7456–1]

Approval and Promulgation of Implementation Plans; State of Kansas

AGENCY: Environmental Protection Agency (EPA).

ACTION: Proposed rule.

SUMMARY: EPA proposes to approve a State Implementation Plan (SIP) revision submitted by the state of Kansas. This revision is a new regulation entitled ''Prevention of Significant Deterioration of Air Quality'' and will replace the existing regulation which comprised the prior body of Prevention of Significant Deterioration of Air Quality. This revision adopts by reference 40 CFR 52.21, as in effect on July 1, 2000.

In the final rules section of the **Federal Register**, EPA is approving the state's SIP revision as a direct final rule without prior proposal because the Agency views this as a noncontroversial revision amendment and anticipates no relevant adverse comments to this action. A detailed rationale for the approval is set forth in the direct final rule. If no relevant adverse comments are received in response to this action, no further activity is contemplated in relation to this action. If EPA receives relevant adverse comments, the direct final rule will be withdrawn and all public comments received will be addressed in a subsequent final rule based on this proposed action. EPA will not institute a second comment period on this action. Any parties interested in commenting on this action should do so at this time. Please note that if EPA receives adverse comment on part of this rule and if that part can be severed from the remainder of the rule, EPA may adopt as final those parts of the rule that are not the subject of an adverse comment.

DATES: Comments on this proposed action must be received in writing by March 28, 2003.

ADDRESSES: Comments may be mailed to Heather Hamilton, Environmental Protection Agency, Air Planning and Development Branch, 901 North 5th Street, Kansas City, Kansas 66101.

FOR FURTHER INFORMATION CONTACT: Heather Hamilton at (913) 551–7039.

SUPPLEMENTARY INFORMATION: See the information provided in the direct final rule which is located in the rules section of the **Federal Register**.

Dated: February 20, 2003.

James B. Gulliford,

Regional Administrator, Region 7.

[FR Doc. 03–4627 Filed 2–25–03; 8:45 am]

BILLING CODE 6560–50–P

DEPARTMENT OF COMMERCE

National Oceanic and Atmospheric Administration

50 CFR Part 600

[I.D 020303A]

Magnuson-Stevens Act Provisions; General Provisions for Domestic Fisheries; Application for Exempted Fishing Permits (EFPs)

AGENCY: National Marine Fisheries Service (NMFS), National Oceanic and Atmospheric Administration (NOAA), Commerce.

ACTION: Notification of a proposal for EFPs to conduct experimental fishing; request for comments.

SUMMARY: The Administrator, Northeast Region, NMFS (Regional Administrator) has made a preliminary determination that the subject EFP application contains all the required information and warrants further consideration. The Regional Administrator has also made a preliminary determination that the activities authorized under the EFP would be consistent with the goals and objectives of the Summer Flounder, Scup, and Black Sea Bass Fishery Management Plan (FMP), the Mid-Atlantic Fishery Council Research Set-Aside Program, and the Atlantic Coastal Fisheries Cooperative Management Act American lobster regulations. However, further review and consultation may be necessary before a final determination is made to issue an EFP. Therefore, NMFS announces that the Regional Administrator proposes to issue an EFP that would allow one vessel to conduct fishing operations otherwise restricted by the regulations governing the fisheries of the Northeastern United States. The vessel would be exempt from the black sea bass Centropristis striata, commercial fishing closure and size limit requirements (size limit exemption is for retaining research samples only), and from Federal lobster/black sea bass pot restrictions in Lobster Management Area 4, lobster trap limits, lobster escape vent requirements, tag requirements in Lobster Management Areas 4 and 5, and any black sea bass area restrictions. The exemptions will allow for experimentation with three different black sea bass escape vent sizes, and for compensation fishing to fund the research.

DATES: Comments on this document must be received on or before 5:00 p.m. EST March 13, 2003.

ADDRESSES: Written comments should be sent to Patricia A. Kurkul, Regional Administrator, NMFS, Northeast Regional Office, 1 Blackburn Drive, Gloucester, MA 01930. Mark the outside of the envelope ''Comments on BSB Escape Vent EFP Proposal.'' Comments may also be sent via facsimile (fax) to (978) 281–9135.

FOR FURTHER INFORMATION CONTACT: Paul Perra, Fishery Policy Analyst, 978–281–9153.

SUPPLEMENTARY INFORMATION: An application for an EFP was submitted to NMFS by Wizard Enterprises on September 9, 2002. Regulations under the Magnuson-Stevens Fishery Conservation and Management Act require publication of this notification to provide interested parties the opportunity to comment on applications for proposed EFPs. The EFP is being requested to facilitate a research project by one vessel that would compare the effects of three different black sea bass pot escape vents on the structure of black sea bass populations. To provide the greatest potential for fishing success, it would be necessary to allow the vessel to fish for, and possess, black sea bass during closures that may be implemented due to the attainment of the commercial quota and frame work adjustments at 50 CFR, 648 subpart I, and minimum size limits at 50 CFR 648 subpart I (size limit exemption is for retaining research samples only); and to exempt the vessel from the 800 lobster pot limit at 50 CFR 697.19(a)(2), tag restrictions at 50 CFR part 697.19(c), and escape vent requirements at 50 CFR 697.21(c). These exemptions would be necessary for the vessel to fish 144 experimental black sea bass/lobster pots. However, in order to maintain the conservation goals of the regulations for American lobster and to protect marine mammals, no lobster harvest would be allowed from any experimental black sea bass/lobster pots fished in Lobster Area Management 4, and all experimental black sea bass/lobster pots would be required to be fished in conformance with the gear requirements under the Atlantic Large Whale Take Reduction Plan, Marine Mammal Protection Act, and Endangered Species Act. In order to make it economically efficient to provide the funding for the research, the vessel participating in the research project also would be authorized to make additional compensation fishing trips during closed seasons, to land up to a total of 25,000 lb (11,340 kg) of black sea bass. However, no black sea bass smaller than the minimum size of 11 inches (27.9 cm) could be sold, traded, bartered, or processed for sale. Landings from such trips would be sold to generate funds that would defray the costs associated with the research projects.

Traps with either a 2–inch (5.08–cm) square, a 2 3/8–inch (6.03–cm) circular, or a 5 3/4–inch (14.61–cm) rectangular escape vent would be tested. The experiment would use 144 traps set in 12 trap strings. The 12 trap strings would be connected by rope at regular intervals and deployed with one float on each end. Two strings of traps each would be deployed next to six different wrecks off the New Jersey coast. Traps would be pulled once a week from mid-May to mid-November. Approximately 26 day-long research fishing trips are proposed for the project during 2003. The fishing activity would occur primarily off the coast from Manasquan to Cape May, NJ. A NMFS-supervised technician would be onboard the participating vessel during all research trips. Any landings that would occur from research or compensation fishing would be reported in the Vessel Trip Report, as required, because the participating vessel possesses a commercial black sea bass moratorium permit. All landings would be landed in compliance with applicable state landing laws.

Based on the results of the EFPs, this action may lead to future rulemaking.

Authority: 16 U.S.C. 1801 *et seq.*

Dated: February 19, 2003.

Richard W. Surdi,

Acting Director, Office of Sustainable Fisheries, National Marine Fisheries Service.

[FR Doc. 03–4440 Filed 2–25–03; 8:45 am]

BILLING CODE 3510–22–S

DEPARTMENT OF COMMERCE

National Oceanic and Atmospheric Administration

50 CFR Part 600

[I.D. 020403A]

Magnuson-Stevens Act Provisions; General Provisions for Domestic Fisheries; Application for Exempted Fishing Permits (EFPs)

AGENCY: National Marine Fisheries Service (NMFS), National Oceanic and Atmospheric Administration (NOAA), Commerce.

ACTION: Notification of a proposal for EFPs to conduct experimental fishing; request for comments.

SUMMARY: The Administrator, Northeast Region, NMFS (Regional Administrator) has made a preliminary determination that an EFP application from the Maine Department of Marine Resources (Maine DMR) contains all the required information and warrants further consideration. The Regional Administrator has also made a preliminary determination that the activities authorized under the EFP would be consistent with the goals and objectives of the Northeast (NE) Multispecies Fishery Management Plan (FMP), and does not detrimentally affect the well being of any stock of fish likely to be taken during the experiment. Therefore, NMFS announces that the Regional Administrator proposes to issue an EFP that would allow one vessel to conduct fishing operations that are otherwise restricted by the

regulations governing the fisheries of the NE United States. The EFP would allow for an exemption from the NE multispecies small mesh northern shrimp fishery exemption area time restrictions. The exempted fishing activity would support research to test a dual panel single Nordmore grate system for commercial northern shrimp, Pandalus borealis, in the Gulf of Maine. The system is intended to separate small shrimp and fish from market-sized shrimp in trawl nets by separating the catch using a Nordmore grate with two sets of bar spacings. Regulations under the Magnuson-Stevens Fishery Conservation and Management Act require publication of this notification to provide interested parties the opportunity to comment on applications for proposed EFPs.

DATES: Comments on this document must be received on or before March 13, 2003.

ADDRESSES: Written comments should be sent to Patricia A. Kurkul, Regional Administrator, NMFS, Northeast Regional Office, 1 Blackburn Drive, Gloucester, MA 01930. Mark the outside of the envelope ''Comments on Maine Department of Marine Resources Northern Shrimp dual panel single Nordmore grate EFP Proposal.'' Comments may also be sent via facsimile (fax) to (978) 281–9135.

FOR FURTHER INFORMATION CONTACT: Jason Blackburn, Fishery Management Specialist, 978–281–9326.

SUPPLEMENTARY INFORMATION: The application for an EFP was submitted by the Maine DMR for research being funded by the Northeast Consortium. The applicant is requesting an exemption for one commercial vessel from the NE multispecies small mesh northern shrimp fishery exemption area time restrictions at 50 CFR 648.80(a)(5)(iii) for 26 days of at-sea gear testing.The objective of the research is to test a dual panel single Nordmore grate system for the purposes of separating small shrimp and most fish from market-sized shrimp in trawl nets by separating the catch using a Nordmore grate with two sets of bar spacings. The experimental design consists of a trouser trawl net utilizing a Nordmore grate with two panels. The upper panel, which the catch in the net will encounter first, has small bar spacing that will let small shrimp and small fish pass through and escape the net, as the codend is tied to the grate below this panel. Anything larger will slide down the bars to the next panel, where the bar spacing is the normal 1–inch. The market sized shrimp and like sized bycatch will pass through these bars and flow back into the codend. Anything larger will slide down the bars and escape through the exit hole in the bottom of the net.

The sea trials would be conducted off the coast of Maine, in the Gulf of Maine Small Mesh Northern Shrimp Exemption Area, during April and May 2003, outside of the fishing season for northern shrimp (January 15 to February 27, 2003). This is the time of year when the various size classes of shrimp are located in the same areas of the Gulf of Maine.

No shrimp or fish will be landed during this study. It is estimated that the total catch of northern shrimp will be 21,632 lb (9,812 kg), with an estimated bycatch of 1,730 lb (785 kg) of whiting, 108 lb (49 kg) of herring, 108 lb (49 kg) of alewife, and a minimal amount of other species. A scientist would be aboard the vessel during all experimental sea trials.

This experimental work is important because it could lead to the development of gear that could improve the size selection of the shrimp nets for northern shrimp and reduce the inadvertent bycatch of fish species. The successful development of a dual panel single Nordmore grate device could provide the fishing industry with a highly selective device that functions similarly to a double Nordmore grate system, while being less cumbersome to rig and handle on deck.

Based on the results of this EFP, this action could lead to future rulemaking.

Authority: 16 U.S.C. 1801 *et seq.*

Dated: February 19, 2003.

Richard W. Surdi,

Acting Director, Office of Sustainable Fisheries, National Marine Fisheries Service.

[FR Doc. 03–4439 Filed 2–25–03; 8:45 am]

BILLING CODE 3510–22–S

Notices

Federal Register

Vol. 68, No. 38

Wednesday, February 26, 2003

This section of the FEDERAL REGISTER contains documents other than rules or proposed rules that are applicable to the public. Notices of hearings and investigations, committee meetings, agency decisions and rulings, delegations of authority, filing of petitions and applications and agency statements of organization and functions are examples of documents appearing in this section.

DEPARTMENT OF AGRICULTURE

Forest Service

Payette National Forest, Idaho; Middle Little Salmon Vegetation Management Project

AGENCY: Forest Service, USDA.

ACTION: Comment Period Extension for Draft Environmental Impact Statement.

SUMMARY: The comment period has been extended for the proposed Middle Little Salmon Vegetation Management Project Draft Environmental Impact Statement (DEIS). The Notice of Availability of the DEIS as published in the **Federal Register** on January 3, 2003, (Volume 68, Number 2).

DATES: Comments concerning the analysis must be received in writing and postmarked by March 9, 2003.

ADDRESSES: Send written comments and suggestions to Forest Supervisor, c/o Middle Little Salmon Vegetation Management Project, Payette National Forest, P.O. Box 1026, McCall, Idaho 83638, fax (208) 634–0744.

FOR FURTHER INFORMATION CONTACT: Sue Dixon, Interdisciplinary Team Leader; or Kimberly Brandel, New Meadows District Ranger at (208) 347–0300.

SUPPLEMENTARY INFORMATION: The comment period ending February 24, 2003, has been extended to March 9, 2003, to provide time for public comment. This DEIS is available on the Internet at: *http://www.fs.fed.us/r4/Payette/main.html.* Substantive comments received during the comment period will receive agency response in the final environmental impact statement.

Dated: February 19, 2003.

Mark Madrid,

Payette Forest Supervisor.

[FR Doc. 03–4482 Filed 2–25–03; 8:45 am]

BILLING CODE 3410–11–M

DEPARTMENT OF AGRICULTURE

Forest Service

EastBridge Allotment Range Analysis; Caribou-Targhee National Forest, Caribou and Bonneville Counties, ID

AGENCY: Forest Service, USDA.

ACTION: Notice of Intent to prepare an Environmental Impact Statement.

SUMMARY: The Soda Springs Ranger District, Caribou-Targhee National Forest, will be preparing an Environmental Impact State (EIS) to analyze the effects of authorizing grazing on several cattle allotments. Allotment Management Plans for the: Bridge Creek, Jacknife, Tincup, Stump Creek, and Salt Lick Cattle Allotments will be updated based on the analysis. The project area is located within Caribou and Bonneville counties in Idaho and in Lincoln County, Wyoming.

The Jacknife, Tincup, Stump Creek, and Salt Lick Cattle Allotments are located approximately 35 miles northeast of Soda Springs. They are in Townships 4, 5, and 6 South, Ranges 45 and 46 East. A small part of the Tincup and Stump Creek Allotments are in Wyoming (Townships 33 and 34 North, Range 118 West). The Bridge Creek Allotment is located approximately ten miles west of the Jacknife Allotment in Townships 4 and 5 South, Ranges 43 and 44 East.

The EIS will display the effects of authorizing cattle grazing on these allotments. Public comments will be used to identify issues and possible alternative management options. The purpose and need for this action is to utilize the opportunity to manage existing cattle grazing under updated management direction to move existing resource conditions to desired states within the project area. The EIS will outline standards and guidelines for livestock management, which will be used to revise Allotment Management Plans for each allotment. The EIS and subsequent revision of the Allotment Management Plans will bring these allotments into compliance with Public Law 104 of the Rescissions Act, and other applicable laws and regulations. Based on the environmental analysis in the EIS, the District Ranger will decide whether to authorize domestic livestock grazing under proposed management direction on the project area's suitable rangelands, and if so, what changes need to be made to the representative Allotment Management Plans in accordance with Forest Plan goals, objectives, and desired future conditions.

DATES: Written comments concerning the analysis should be received within 30 days of the date of publication of this notice in the **Federal Register.**

ADDRESSES: Send written comments to Soda Springs Ranger District, Attn: David Whittekiend, 421 West 2nd South, Soda Springs, Idaho 83276. The responsible official for this decision is David Whittekiend, District Ranger.

FOR FURTHER INFORMATION CONTACT: Questions concerning the proposed action and EIS should be directed to Victor Bradfield, Range Management Specialist, at (208) 547–4356.

SUPPLEMENTARY INFORMATION: The EIS and subsequent revision of the Allotment Management Plans will bring these allotments into compliance with Public Law 104, and other applicable laws and regulations.

The Forest Service invites written comments and suggestions on the issues related to the proposal and the area being analyzed. Information received will be used in preparation of the Draft EIS and Final EIS. For most effective use, comments should be submitted to the Forest Service within 30 days from the date of publication of this Notice in the **Federal Register.**

Agency representatives and other interested people are invited to visit with Forest Service officials at any time during the EIS process. Two specific times periods are identified for the receipt of formal comments on the analysis. The two comment periods are, (1) during the scoping process, the next 30 days following publication of this Notice in the **Federal Register,** and (2) during the formal review period of the Draft EIS.

The Forest Service estimates the Draft EIS will be filed within 6 months of this Notice of Intent, approximately May 2003. The Final EIS will be filed within 6 months of that date, approximately October 2003.

The comment period on the draft environmental impact statement will be 45 days from the date the environmental Protection Agency publishes the notice of availability in the **Federal Register.**

The Forest Service believes, at this early stage, it is important to give

reviewers notice of several court rulings related to public participation in the environmental review process. First, reviewers of draft environmental impact statements must structure their participation in the environmental review of the proposal so that it is meaningful and alerts an agency to the reviewer's position and intentions.

Vermont Yankee Nuclear Power Corp. v. *NRDC,* 435 U.S. 519, 553 (1978). Also, environmental objections that could be raised at the draft environmental impact statement stage but that are not raised until after completion of the final environmental impact statement may be waived or dismissed by the courts. *City of Angoon* v. *Hodel,* 803 F.2d 1016, 1022 (9th Cir. 1986) and *Wisconsin Heritages, Inc.* v. *Harris,* 490 F. Supp. 1334, 1338 (E.D. Wis. 1980). Because of these court rulings, it is very important that those interested in this proposed action participate by the close of the 45 day comment period so that substantive comments and objections are made available to the Forest Service at a time when it can meaningfully consider them and respond to them in the final environmental impact statement.

To assist the Forest Service in identifying and considering issues and concerns on the proposed action, comments on the draft environmental impact statement should be as specific as possible. It is also helpful if comments refer to specific pages or chapters of the draft environmental impact statement. Comments may also address the adequacy of the draft environmental impact statement or the merits of the alternatives formulated and discussed in the statement. (Reviewers may wish to refer to the Council on Environmental Quality Regulations for implementing the procedural provisions of the National environmental Policy Act at 40 CFR 1503.3 in addressing these points.)

Comments received in response to this solicitation, including names and addresses of those who comment, will be considered part of the public record on this proposed action and will be available for public inspection. Comments submitted anonymously will be accepted and considered: however, those who submit anonymous comments will not have standing to appeal the subsequent decision under 36 CFR Parts 215 or 217. Additionally, pursuant to 7 CFR 1.27 (d), any person may request the agency to withhold a submission from the public record by showing how the Freedom of Information Act (FOIA) permits such confidentiality. Persons requesting such confidentiality should be aware that under the FOIA, confidentiality may be granted in only very limited circumstances such as to protect trade secrets. The Forest Service will inform the requester of the agency's decision regarding the request for confidentiality, and where the request is denied, the agency will return the submission and notify the requester that the comments may be resubmitted with or without name and address within 10 days.

Dated: February 20, 2003.

David C. Whittekiend,

Soda Springs Ranger District.

[FR Doc. 03–4486 Filed 2–25–03; 8:45 am]

BILLING CODE 3410–11–M

DEPARTMENT OF AGRICULTURE

Opal Creek Scenic Recreation Area (SRA) Advisory Council

AGENCY: Forest Service, USDA Forest Service.

ACTION: Notice of meeting.

SUMMARY: An Opal Creek Scenic Recreation Area Advisory Council meeting will convene in Stayton, Oregon on Monday, March 17, 2003. The meeting is scheduled to begin at 6 p.m., and will conclude at approximately 8:30 p.m. The meeting will be held in the South Room of the Stayton Community Center located on 400 West Virginia Street in Stayton, Oregon.

The Opal Creek Wilderness and Opal Creek Scenic Recreation Area Act of 1996 (Opal Creek Act) (Pub. L. 104–208) directed the Secretary of Agriculture to establish the Opal Creek Scenic Recreation Area Advisory Council. The Advisory Council is comprised of thirteen members representing state, county and city governments, and representatives of various organizations, which include mining industry, environmental organizations, inholders in Opal Creek Recreation Area, economic development, Indian tribes, adjacent landowners and recreation interests. The council provides advice to the Secretary of Agriculture on preparation of a comprehensive Opal Creek Management Plan for the SRA, and consults on a periodic and regular basis on the management of the area. Tentative agenda items include information sharing on the following topics.

Update on SRA Management Plan appeal;
Process for recruitment and appointment of replacement Council members;
Review of draft Information Strategy Plan for implementing new use rules;
Finalize the monitoring plan;
Information on new trail proposals for the Transportation Plan;
Presentation of draft evacuation plan.

A direct public comment period is tentatively scheduled to begin at 8 p.m. Time allotted for individual presentations will be limited to 3 minutes. Written comments are encouraged, particularly if the material cannot be presented within the time limits of the comment period. Written comments may be submitted prior to the March 17 meeting by sending them to Designated Federal Official Gina Owens at the address given below.

FOR FURTHER INFORMATION CONTACT: For more information regarding this meeting, contact Designated Federal Official Gina Owens; Williamette National Forest, Detroit Ranger District, HC 73 Box 320, Mill City, OR 97360; (503) 854–3366.

Dated: February 20, 2003.

Dallas J. Emch,

Forest Supervisor.

[FR Doc. 03–4488 Filed 3–25–03; 8:45 am]

BILLING CODE 3410–-11–M

DEPARTMENT OF AGRICULTURE

Forest Service

Glen/Colusa County Resource Advisory Committee

AGENCY: Forest Service, USDA.

ACTION: Notice of meeting.

SUMMARY: The Glen/Colusa County Resource Advisory Committee (RAC) will meet in Willows, California. Agenda items to be covered include: (1) Introductions, (2) Approval of Minutes, (3) Public Comment, (4) Colusa Historical Society, (5) Revised Tracking Form/Possible Action, (6) Election of Officers, (7) Update on Absent Members, (8) How to Solicit Projects, (9) General Discussion, (10) Next Agenda.

DATES: The meeting will be held on March 31, 2003, from 1:30 p.m. and end at approximately 4:30 p.m.

ADDRESSES: The meeting will be held at the Mendocino National Forest Supervisor's Office, 825 N. Humboldt Ave., Willows, CA 95988. Individuals wishing to speak or propose agenda items must send their names and proposals to Jim Giachino, DFO, 825 N. Humboldt Ave., Willows, CA 95988.

FOR FURTHER INFORMATION CONTACT: Bobbin Gaddini, Committee Coordinator, USDA, Mendocino National Forest, Grindstone Ranger District, P.O. Box 164, Elk Creek, CA 95939. (530) 968–5329; e-mail *ggaddini@fs.fed.us.*

SUPPLEMENTARY INFORMATION: The meeting is open to the public. Committee discussion is limited Forest Service staff and Committee members.

However, persons who wish to bring matters to the attention of the Committee may file written statements with the Committee staff before or after the meeting. Public input sessions will be provided and individuals who made written requests by March 27, 2003 will have the opportunity to address the committee at those sessions.

Dated: February 20, 2003.

James F. Giachino,

Designated Federal Official.

[FR Doc. 03–4462 Filed 2–25–03; 8:45 am]

BILLING CODE 3410–11–M

DEPARTMENT OF AGRICULTURE

Natural Resources Conservation Service

Notice of Proposed Changes to Section IV of the Field Office Technical Guide (FOTG) of the Natural Resources Conservation Service in Michigan

AGENCY: Natural Resources Conservation Service (NRCS) in Michigan, Department of Agriculture.

ACTION: Notice of availability of proposed changes in Michigan NRCS FOTG, section IV for review and comment.

SUMMARY: It is the intention of NRCS in Michigan to issue revised conservation practice standards in section IV of the FOTG. The revised standards include:

Animal Trails and Walkways—575
Channel Stabilization—584
Drainage Water Management (Ac.)—554
Irrigation Regulating Reservoir (No.)—552
Land Reconstruction, Abandoned Mined Land (Ac.)—543
Land Reconstruction, Currently Mined Land (Ac.)—544
Lined Waterway or Outlet (Ft.)—468
Terrace—600

DATES: Comments will be received for a 30-day period commencing with this date of publication.

FOR FURTHER INFORMATION CONTACT: Inquire in writing to Kevin Wickey, Assistant State Conservationist for Technology, Natural Resources Conservation Service, 3001 Coolidge Road, Suite 250, E. Lansing, MI 48823. Copies of these standards will be made available upon written request. You may submit electronic requests and comments to *Kevin.Wickey@mi.usda.gov*.

FOR FURTHER INFORMATION CONTACT: Kevin Wickey 517–324–5279.

SUPPLEMENTARY INFORMATION: Section 393 of the Federal Agriculture Improvement and Reform Act of 1996 states that revisions made after enactment of the law, to NRCS state technical guides used to carry out highly erodible land and wetland provisions of the law, shall be made available for public review and comment. For the next 30 days, the NRCS in Michigan will receive comments relative to the proposed changes. Following that period, a determination will be made by the NRCS in Michigan regarding disposition of those comments and a final determination of change will be made.

Dated: February 13, 2003.

Ronald C. Williams,

State Conservationist, E. Lansing, Michigan.

[FR Doc. 03–4451 Filed 2–25–03; 8:45 am]

BILLING CODE 3410–16–P

DEPARTMENT OF AGRICULTURE

Natural Resources Conservation Service

Notice of Proposed Changes to Section IV of the Tennessee Field Office Technical Guide (FOTG)

AGENCY: Natural Resources Conservation Service (NRCS) in Tennessee, Department of Agriculture.

ACTION: Notice of availability of proposed changes in the Tennessee NRCS Field Office Technical Guide, section IV, for review and comment.

SUMMARY: It has been determined by the NRCS State Conservationist for Tennessee that changes must be made in the NRCS Field Office Technical Guide, specifically in practice standards Contour Buffer Strip (Code 332); Residue Management, No Till/Strip Till (Code 329A); and Residue Management, Mulch Till (Code 329B) to account for improved technology. These practice standards can be used in systems that treat highly erodible cropland.

DATES: Comments will be received for a 30-day period commencing with the date of this publication.

FOR FURTHER INFORMATION CONTACT: Inquire in writing to James W. Ford, State Conservationist, Natural Resources Conservation Service (NRCS), 675 U.S. Courthouse, 801 Broadway, Nashville, Tennessee, 37203, telephone number (615) 277–2531. Copies of the practice standards will be made available upon written request.

SUPPLEMENTARY INFORMATION: Section 343 of the Federal Agriculture Improvement and Reform Act of 1996 states that revisions made after enactment of the law to NRCS state technical guides used to perform highly erodible land and wetland provisions of the law shall be made available for public review and comment. For the next 30 days, the NRCS in Tennessee will receive comments relative to the proposed changes. Following that period, a determination will be made by the NRCS in Tennessee regarding disposition of those comments and a final determination of change will be made to the subject practice standards.

Dated: February 13, 2003.

James W. Ford,

State Conservationist.

[FR Doc. 03–4450 Filed 2–24–03; 8:45 am]

BILLING CODE 3410–16–P

DEPARTMENT OF COMMERCE

Submission for OMB Review; Comment Request

The Department of Commerce has submitted to the Office of Management and Budget (OMB) for emergency clearance the following proposal for collection of information under the provisions of the Paperwork Reduction Act (44 U.S.C. Chapter 35).

Agency: National Institute of Standards and Technology (NIST).

Title: Survey of Companies Having Employees Present at WTC Buildings 1, 2, and 7 as Part of the NIST WTC Investigation.

Form Number(s): None.

OMB Approval Number: None.

Type of Request: Emergency.

Burden Hours: 862.

Number of Respondents: 606.

Average Hours per Response: 2 hours per response for companies; 15 minutes per response for family members.

Needs and Uses: NIST will be conducting the Investigation as requested under the WTC Report issued by Congress on February 8, 2002. The objectives of the NIST World Trade Center Investigation are to: (1) Determine technically, why and how buildings WTC 1, 2, and 7 collapsed following the initial impact of the aircraft; (2) Determine why the injuries and fatalities were so high or low depending on location, including all technical aspects of fire protection, response, evacuation, and occupant behavior and emergency response; (3) Determine the procedures and practices that were used in the design, construction, operation, and maintenance of the World Trade Center Buildings; and (4) Identify, as specifically as possible, building and fire codes, standards, and practices that warrant revision and are still in use. The proposed information collection will

consist of a written request to company representatives asking for a list of contact information for employees present in World Trade Center Building 1, 2, or 7 on the morning of September 11, 2001 at the time of the first aircraft impact. Additionally, a web site will be set up in order to collect names and contact information of family members of victims of the collapse of WTC 1 and 2 who spoke to decedents after the building was struck by the first airplane. This information will be used to form a database of occupant contact information. The occupants may be contacted at a later date pursuant to a separate OMB request to voluntarily participate in interviews and/or focus groups to be conducted by the NIST Investigation. These interviews and focus groups will develop or refute investigatory hypotheses, support modeling results, and record events inside the buildings which cannot otherwise be determined. This information must be conducted in a timely manner in order to facilitate dissemination to other aspects of the Investigation, including structural analysis, emergency personnel response, thermal environment and interior tenability, and egress and human behavior analysis.

Affected Public: Business or other for-profit organizations, individuals or households.

Frequency: One-time.

Respondent Obligation: Voluntary.

OMB Desk Officer: Jacqueline Zeiher, (202) 395–4638.

Copies of the above information collection proposal can be obtained by calling or writing Diana Hynek, Departmental Paperwork Clearance Officer, (202) 482–0266, Department of Commerce, Room 6625, 14th and Constitution Avenue, NW., Washington, DC 20230 (or via the Internet at *dHynek@doc.gov*).

Written comments and recommendations for the proposed information collection should be sent by March 31, 2003, to Jacqueline Zeiher, OMB Desk Officer, Room 10202, New Executive Office Building, Washington, DC 20503.

Dated: February 21, 2003.

Gwellnar Banks,

Management Analyst, Office of the Chief Information Officer.

[FR Doc. 03–4559 Filed 2–25–03; 8:45 am]

BILLING CODE 3510–13–P

DEPARTMENT OF COMMERCE

National Telecommunications and Information Administration

Docket Nos. 020816196–2196–01; 020816197–2197–01; 010222048–2217–03; 010222048–2229–04; 010222048–2243–05; 010222048–2293–06; 010222048–2215–02; 010222048–2313–07; and 010222048–3014–08.

Closing Comment Period on Review of Exceptions to the Electronic Signatures in Global and National Commerce Act

AGENCY: National Telecommunications and Information Administration (NTIA), U.S. Department of Commerce

ACTION: Notice

SUMMARY: In a series of nine (9) Notices published in the **Federal Register**, the National Telecommunications and Information Administration (NTIA) invited the public to submit comments on the exceptions to the Electronic Signatures in Global and National Commerce Act, Pub. L. No. 106–229, *codified at* 15 U.S.C. §§ 7001 *et seq.* (''ESIGN'' or ''the Act'') set out in section 103 of the Act.[1] Comments filed on or before the deadlines listed in the Notices were posted on NTIA's website and comments received after the deadline were posted as late-filed comments. The comment period for the ninth Notice will expire on March 31, 2003.[2] As of March 31, 2003, the comment periods in each of the dockets listed herein are closed. NTIA will not accept or place in the record documents filed in the listed dockets after this date.

DATES: The comment periods in the dockets referenced in this Notice will be closed on March 31, 2003.

FOR FURTHER INFORMATION CONTACT: For questions about this Notice, contact Josephine Scarlett, Attorney, Office of the Chief Counsel, NTIA, 14th Street and Constitution Avenue, N.W., Washington, DC 20230, telephone (202) 482–1816 or electronic mail: jscarlett@ntia.doc.gov. Media inquiries should be directed to the Office of Public Affairs, National Telecommunications and Information Administration, at (202) 482–7002.

SUPPLEMENTARY INFORMATION:

Background

NTIA is the executive branch agency responsible for developing and articulating domestic and international telecommunications policy. NTIA is the principal adviser to the President on telecommunications policies pertaining to the Nation's economic and technological advancement in the telecommunications industry. The evaluation of the exceptions to the ESIGN Act is a part of NTIA's statutory responsibility to Congress as required in section 103(c)(1) of the Electronic Signatures in Global and National Commerce Act, Pub. L. No. 106–229, 114 Stat. 464 (2000). The ESIGN Act facilitates the use of electronic records and signatures in interstate and foreign commerce and removes uncertainty about the validity of contracts entered into electronically. Section 101 requires, among other things, that electronic signatures, contracts, and records be given legal effect, validity, and enforceability. Sections 103(a) and (b) of the Act provide that the requirements of section 101 shall not apply to contracts and records governed by statutes and regulations regarding: court documents, probate and domestic law matters; state commercial law; consumer law covering utility services, residential property foreclosure and eviction notices; insurance benefits notices; product recall notices; and hazardous materials papers. Section 103(c)(1) requires NTIA's principal, the Assistant Secretary for Communications and Information, to submit a report to Congress on the results of the evaluation of the exceptions to the ESIGN Act within three years after the date of enactment of the Act, or no later than June 30, 2003.

Due to the complexity of the issues in this evaluation and to facilitate a fully developed record, NTIA allowed interested parties to submit late-filed comments. NTIA has received a number of comments after the deadlines set in the Notices. Effective March 31, 2003, however, NTIA will no longer accept or place in the public record comments for consideration in this evaluation.

Dated: February 20, 2002.

Kathy D. Smith,

Chief Counsel, National Telecommunications and Information Administration.

[FR Doc. 03–4501 Filed 2–25–03; 8:45 am]

BILLING CODE 3510–60–S

[1] Notices have been published on the following exceptions to ESIGN: court, family law, and hazardous materials documents; wills; product recall, housing default, insurance cancellation, and utility termination notices; and contracts governed by state uniform commercial law. *See* 67 Fed.Reg. 56277, 56279, 59828, 61599, 63379, 69201, 75849, 78421; 68 Fed.Reg. 4179.

[2] *See* 68 Fed.Reg. 4179.

CONSUMER PRODUCT SAFETY COMMISSION

Sunshine Act Meeting

AGENCY: Consumer Product Safety Commission.

TIME AND DATE: Friday, March 7, 2003, 10 a.m.

LOCATION: Room 420, Bethesda Towers, 4330 East West Highway, Bethesda, Maryland.

STATUS: Open to the public.

MATTER TO BE CONSIDERED:

Commission Decision on Product Registration Cards (Petition CP 01–1)

The Commission will consider Petition CP 01–1 submitted by the Consumer Federation of America (CFA) requesting that the Commission issue a rule requiring product registration cards with every product intended for children.

For a recorded message containing the latest agenda information, call (301) 504–7948.

CONTACT PERSON FOR ADDITIONAL INFORMATION: Todd A. Stevenson, Office of the Secretary, 4330 East West Highway, Bethesda, MD 20207, (301) 504–7923.

Dated: February 24, 2003.

Todd A. Stevenson,

Secretary.

[FR Doc. 03–4658 Filed 2–24–03; 2:24 pm]

BILLING CODE 6355–01–M

DEPARTMENT OF EDUCATION

[CFDA No.: 84.128G]

Migrant and Seasonal Farmworkers Program; Notice Inviting Applications for New Awards for Fiscal Year (FY) 2003

Purpose of Program: To provide grants for vocational rehabilitation services to individuals with disabilities who are migrant or seasonal farmworkers, (individuals who have been determined in accordance with rules prescribed by the Secretary of Labor), and to the family members who are residing with those individuals (whether or not those family members are individuals with disabilities).

Eligible Applicants: State designated agencies; nonprofit agencies working in collaboration with a State agency; and local agencies working in collaboration with a State agency.

Applications Available: February 27, 2003.

Deadline for Transmittal of Applications: April 15, 2003.

Deadline for Intergovernmental Review: June 14, 2003.

Estimated Available Funds: The Administration's budget request for FY 2003 does not include funds for this program. However, we are inviting applications to allow enough time to complete the grant process, if Congress appropriates funds for this program.

Estimated Range of Awards: $100,000–$150,000.

Estimated Average size of Awards: $127,000.

Estimated Number of Awards: 2.

Note: The Department is not bound by any estimates in this notice.

Project Period: Up to 60 months.

Applicable Regulations: The Education Department General Administrative Regulations (EDGAR) in 34 CFR parts 74, 75, 77, 79, 80, 81, 82, 85, and 86.

Note: The regulations in 34 CFR part 79 apply to all applicants except federally recognized Indian tribes.

Note: The regulations in 34 CFR part 86 apply to institutions of higher education only.

Priority

Invitational Priority

We are particularly interested in applications that meet the following priority:

Projects that provide vocational rehabilitation services including, but not limited to, vocational skills development, job placement, job training, occupational skills training programs, cultural awareness, language skills development, life skills (*e.g.*, health, education, socialization), English as a Second Language, dissemination of employment information, and training workshops.

Under 34 CFR 75.105(c)(1), we do not give an application that meets the priority a competitive or absolute preference over other applications.

Application Procedures

Note: Some of the procedures in these instructions for transmitting applications differ from those in the Education Department General Administrative Regulations (EDGAR) (34 CFR 75.102). Under the Administrative Procedure Act (5 U.S.C. 553) the Department generally offers interested parties the opportunity to comment on proposed regulations. However, these amendments make procedural changes only and do not establish new substantive policy. Therefore, under 5 U.S.C. 553(b)(A), the Secretary has determined that proposed rulemaking is not required.

Pilot Project for Electronic Submission of Applications

In FY 2003, the U.S. Department of Education is continuing to expand its pilot project for electronic submission of applications to include additional formula grant programs and additional discretionary grant competitions. The Migrant and Seasonal Farmworkers Program—CFDA: 84.128G is one of the programs included in the pilot project. If you are an applicant under the Migrant and Seasonal Farmworkers Program, you may submit your application to us in either electronic or paper format.

The pilot project involves the use of the Electronic Grant Application System (e-Application) portion of the Grant Administration and Payment System (GAPS). Users of e-Application will be entering data on-line while completing their applications. You may not e-mail a soft copy of a grant application to us. If you participate in this voluntary pilot project by submitting an application electronically, the data you enter on-line will be saved into a database. We request your participation in e-Application. We shall continue to evaluate its success and solicit suggestions for improvement.

If you participate in e-Application, please note the following:

- Your participation is voluntary.
- You will not receive any additional point value because you submit a grant application in electronic format, nor will we penalize you if you submit an application in paper format. When you enter the e-Application system, you will find information about its hours of operation.
- You may submit all documents electronically, including the Application for Federal Assistance (ED 424), Budget Information—Non-Construction Programs (ED 524), and all necessary assurances and certifications.
- After you electronically submit your application, you will receive an automatic acknowledgement, which will include a PR/Award number (an identifying number unique to your application).
- Within 3 working days after submitting your electronic application, fax a signed copy of the Application for Federal Assistance (ED 424) to the Application Control Center after following these steps:

(1) Print ED 424 from the e-Application system.

(2) The institution's Authorizing Representative must sign this form.

(3) Place the PR/Award number in the upper right hand corner of the hard copy signature page of the ED 424.

(4) Fax the signed ED 424 to the Application Control Center at (202) 260–1349.

• We may request that you give us original signatures on all other forms at a later date.

• *Closing Date Extension in Case of System Unavailability:* If you elect to participate in the e-Application pilot for the Migrant and Seasonal Farmworkers Program and you are prevented from submitting your application on the closing date because the e-Application system is unavailable, we will grant you an extension of 1 business day in order to transmit your application electronically, by mail, or by hand delivery. For us to grant this extension—

(1) You must be a registered user of e-Application, and have initiated an e-Application for this competition; and

(2)(a) The e-Application system must be unavailable for 60 minutes or more between the hours of 8:30 a.m. and 3:30 p.m., Washington, DC time, on the deadline date; or

(b) The e-Application system must be unavailable for any period of time during the last hour of operation (that is, for any period of time between 3:30 and 4:30 p.m., Washington, DC time) on the deadline date. The Department must acknowledge and confirm these periods of unavailability before granting you an extension. To request this extension you must contact either (1) the person listed elsewhere in this notice under **FOR FURTHER INFORMATION CONTACT** or (2) the e-Grants help desk at 1–888–336–8930.

You may access the electronic grant application for the Migrant and Seasonal Farmworkers Program at: *http://e-grants.ed.gov.*

We have included additional information about the e-Application pilot project (see Parity Guidelines between Paper and Electronic Applications) in the application package.

For Applications Contact: Education Publications Center (ED Pubs), PO Box 1398, Jessup, MD 20794–1398. Telephone (toll free): 1–877–433–7827. FAX: (301) 470–1244. If you use a telecommunications device for the deaf (TDD), you may call (toll free): 1–877–576–7734.

You may also contact ED Pubs at its Web site: *http://www.ed.gov/pubs/edpubs.html.*

Or you may contact ED Pubs at its e-mail address: *edpubs@inet.ed.gov.*

If you request an application from ED Pubs, be sure to identify this competition as follows: CFDA number 84.128G.

Individuals with disabilities may obtain a copy of the application package in an alternative format by contacting the Grants and Contracts Services Team, U.S. Department of Education, 400 Maryland Avenue, SW., room 3317, Switzer Building, Washington, DC 20202–2550. Telephone: (202) 205–8207. If you use a telecommunications device for the deaf (TDD), you may call the Federal Information Relay Service (FIRS) at 1–800–877–8339. However, the Department is not able to reproduce in an alternative format the standard forms included in the application package.

FOR FURTHER INFORMATION CONTACT: Mary E. Chambers, U.S. Department of Education, 400 Maryland Avenue, SW., room 3322, Switzer Building, Washington, DC 20202–2647. *Telephone:* (202) 205–8435. If you use a telecommunications device for the deaf (TDD), you may call the Federal Information Relay Service (FIRS) at 1–800–877–8339.

Individuals with disabilities may obtain this document in an alternative format (*e.g.*, Braille, large print, audiotape, or computer diskette) on request to the contact person listed in the preceding paragraph.

Electronic Access to This Document

You may view this document, as well as all other Department of Education documents published in the **Federal Register**, in text or Adobe Portable Document Format (PDF) on the Internet at the following site: *http://www.ed.gov/legislation/FedRegister.*

To use PDF you must have Adobe Acrobat Reader, which is available free at this site. If you have questions about using PDF, call the U.S. Government Printing Office (GPO), toll free, at 1–888–293–6498; or in the Washington, DC, area at (202) 512–1530.

Note: The official version of this document is the document published in the **Federal Register**. Free Internet access to the official edition of the **Federal Register** and the Code of Federal Regulations is available on GPO Access at: *http://www.access.gpo.gov/nara/index.html.*

Program Authority: 29 U.S.C. 774.

Dated: February 20, 2003.

Robert H. Pasternack,

Assistant Secretary for Special Education and Rehabilitative Services.

[FR Doc. 03–4548 Filed 2–25–03; 8:45 am]

BILLING CODE 4000–01–U

DEPARTMENT OF ENERGY

Environmental Management Site-Specific Advisory Board, Oak Ridge Reservation

AGENCY: Department of Energy.

ACTION: Notice of open meeting.

SUMMARY: This notice announces a meeting of the Environmental Management Site-Specific Advisory Board (EM SSAB), Oak Ridge. The Federal Advisory Committee Act (Pub. L. 92–463, 86 Stat. 770) requires that public notice of this meeting be announced in the **Federal Register**.

DATES: Wednesday, March 12, 2003, 6 p.m.

ADDRESSES: DOE Information Center, 475 Oak Ridge Turnpike, Oak Ridge, TN.

FOR FURTHER INFORMATION CONTACT: Pat Halsey, Federal Coordinator, Department of Energy Oak Ridge Operations Office, P.O. Box 2001, EM–90, Oak Ridge, TN 37831. Phone (865) 576–4025; Fax (865) 576–5333 or E-mail: *halseypj@oro.doe.gov.*

SUPPLEMENTARY INFORMATION:

Purpose of the Board: The purpose of the Board is to make recommendations to DOE and its regulators in the areas of environmental restoration, waste management, and related activities.

Tentative Agenda:

• The meeting presentation will feature Steve Liedle, President of Bechtel Jacobs Company LLC, who will give an update on environmental cleanup activities from the company's perspective as the DOE management and integration contractor. Accelerated closure plans for DOE-Oak Ridge Environmental Management Program sites will be the principal focus of the presentation.

Public Participation: The meeting is open to the public. Written statements may be filed with the Committee either before or after the meeting. Individuals who wish to make oral statements pertaining to agenda items should contact Pat Halsey at the address or telephone number listed above. Requests must be received five days prior to the meeting and reasonable provision will be made to include the presentation in the agenda. The Deputy Designated Federal Officer is empowered to conduct the meeting in a fashion that will facilitate the orderly conduct of business. Each individual wishing to make public comment will be provided a maximum of five minutes to present their comments.

Minutes: Minutes of this meeting will be available for public review and

copying at the Department of Energy's Information Center at 475 Oak Ridge Turnpike, Oak Ridge, TN between 8 a.m. and 5 p.m. Monday through Friday, or by writing to Pat Halsey, Department of Energy Oak Ridge Operations Office, P.O. Box 2001, EM–90, Oak Ridge, TN 37831, or by calling her at (865) 576–4025.

Issued at Washington, DC, on February 21, 2003.

Rachel M. Samuel,

Deputy Advisory Committee Management Officer.

[FR Doc. 03–4530 Filed 2–25–03; 8:45 am]

BILLING CODE 6450–01–P

DEPARTMENT OF ENERGY

Office of Fossil Energy

Orders Granting and Vacating Authority To Import and Export Natural Gas, Including Liquefied Natural Gas

In the matter of: FE Docket Nos. 92–142–NG, 94–15–NG, 02–95–NG, 02–92–NG, and 02–143–NG, 92–94–NG, 92–140–NG, 02–98–NG, 03–01–NG, 02–100–NG, 02–101–LNG, 02–102–LNG, 03–02–NG, 03–03–NG; The Berkshire Gas Company, Phillips Gas Marketing Company, El Paso Merchant Energy, L.P., EnergyNorth Natural Gas, Inc., Essex Gas Company, Essex County Gas Company, AllEnergy Gas & Electric Marketing Company, L.L.C., Abitibi-Consolidated Company of Canada, NorthWestern Energy, a Division of Northwestern Corporation, Western International Holdings Ltd., Oleum Energy Corporation, Selkirk Cogen Partners, L.P., AIG Energy Trading Inc.; Orders Granting and Vacating Authority To Import and Export Natural Gas, Including Liquefied Natural Gas.

AGENCY: Office of Fossil Energy, DOE.

ACTION: Notice of orders.

SUMMARY: The Office of Fossil Energy (FE) of the Department of Energy gives notice that during January 2003, it issued Orders granting and vacating authority to import and export natural gas, including liquefied natural gas. These Orders are summarized in the attached appendix and may be found on the FE Web site at *http://www.fe.doe.gov* (select gas regulation), or on the electronic bulletin board at (202) 586–7853. They are also available for inspection and copying in the Office of Natural Gas & Petroleum Import & Export Activities, Docket Room 3E–033, Forrestal Building, 1000 Independence Avenue, SW., Washington, DC 20585, (202) 586–9478. The Docket Room is open between the hours of 8 a.m. and 4:30 p.m., Monday through Friday, except Federal holidays.

Issued in Washington, DC, on February 11, 2003.

Clifford P. Tomaszewski,

Manager, Natural Gas Regulation, Office of Natural Gas & Petroleum Import & Export Activities, Office of Fossil Energy.

APPENDIX.—ORDERS GRANTING AND VACATING IMPORT/EXPORT AUTHORIZATIONS

[DOE/FE AUTHORITY]

Order no.	Date issued	Importer/exporter FE docket no.	Import volume	Export volume	Comments
713–A	1–6–03	The Berkshire Gas Company 92–142–NG			Vacate blanket import authority.
926–A	1–6–03	Phillips Gas Marketing Company. 94–15–NG			Vacate blanket export authority.
1840	1–6–03	El Paso Merchant Energy, L.P. 02–95–NG	400 Bcf		Import and export a combined total of natural gas from and to Canada and Mexico, beginning on January 6, 2003, and extending through January 5, 2005.
1840	1–6–03	El Paso Merchant Energy, L.P. 02–95–NG			Vacate blanket import authority. Order Nos. 1509 and 1509–A.
1840	1–6–03	El Paso Merchant Energy, L.P. 02–95–NG			Vacate blanket export authority. Order Nos. 1510 and 1510–A.
1841	1–6–03	EnergyNorth Natural Gas, Inc. 02–92–NG	3 Bcf		Import and export a combined total of natural gas from and to Canada, beginning on January 15, 2003, and extending through January 14, 2005.
714–A	1–6–03	EnergyNorth Natural Gas, Inc. 02–143–NG			Vacate blanket import authority.
1842	1–6–03	Essex Gas Company 02–94–NG	2 Bcf		Import and export a combined total of natural gas from and to Canada, beginning on January 15, 2003, and extending through January 14, 2005.
711–A	1–6–03	Essex County Gas Company 92–140–NG			Vacate blanket import authority.
1844	1–7–03	AllEnergy Gas & Electric Marketing Company, L.L.C. 02–98–NG	3.6 Bcf		Import natural gas from Canada, beginning on February 1, 2003, and extending through January 31, 2005.

APPENDIX.—ORDERS GRANTING AND VACATING IMPORT/EXPORT AUTHORIZATIONS—Continued

[DOE/FE AUTHORITY]

Order no.	Date issued	Importer/exporter FE docket no.	Import volume	Export volume	Comments
1845	1–7–03	Abitibi-Consolidated Company of Canada. 03–01–NG	2.5 Bcf		Import and export a combined total of natural gas from and to Canada, beginning on February 1, 2003, and extending through January 31, 2005.
1846	1–10–03	NorthWestern Energy, A Division of Northwestern Corporation. 02–100–NG	20 Bcf		Import natural gas from Canada, beginning on February 7, 2003, and extending through February 6, 2005.
1847	1–15–03	Western International Holdings Ltd. 02–101–LNG	37 Bcf		Import LNG from various international sources beginning on January 20, 2003, and extending through January 19, 2005.
1848	1–15–03	Oleum Energy Corporation 02–102–LNG	20 Bcf		Import LNG from various international sources beginning on April 15, 2003, and extending through April 14, 2005.
1849	1–21–03	Selkirk Cogen Partners, L.P. 03–02–NG	57 Bcf		Import and export a combined total of natural gas from and to Canada, beginning on January 29, 2003, and extending through January 28, 2005.
1845	1–23–03	Abitibi-Consolidated Company of Canada. 03–01–NG			Errata notice. Ordering Paragraph (A) incorrectly stated the volumes of natural gas to be imported and exported.
1850	1–28–03	AIG Energy Trading Inc. 03–03–NG	500 Bcf		Import and export a combined total of natural gas from and to Canada and Mexico, beginning on April 1, 2003, and extending through March 31, 2005.

[FR Doc. 03–4529 Filed 2–25–03; 8:45 am]

BILLING CODE 6450–01–P

DEPARTMENT OF ENERGY

Federal Energy Regulatory Commission

[Docket No. RP96–200–097]

CenterPoint Energy Gas Transmission Company; Notice of Compliance Filing

February 20, 2003.

Take notice that on February 12, 2003, CenterPoint Energy Gas Transmission Company (CEGT) tendered for filing a compliance filing as directed by the Commission's order dated January 30, 2003 in this docket.

Any person desiring to protest said filing should file a protest with the Federal Energy Regulatory Commission, 888 First Street, NE., Washington, DC 20426, in accordance with section 385.211 of the Commission's Rules and Regulations. All such protests must be filed in accordance with Section 154.210 of the Commission's Regulations. Protests will be considered by the Commission in determining the appropriate action to be taken, but will not serve to make protestants parties to the proceedings. This filing is available for review at the Commission in the Public Reference Room or may be viewed on the Commission's Web site at *http://www.ferc.gov* using the ≥FERRIS≥ link. Enter the docket number excluding the last three digits in the docket number field to access the document. For Assistance, please contact FERC Online Support at *FERCOnlineSupport@ferc.gov* or toll-free at (866) 208–3676, or TTY, contact (202) 502–8659. The Commission strongly encourages electronic filings. *See* 18 CFR 385.2001(a)(1)(iii) and the instructions on the Commission's Web site under the ≥e-Filing≥ link.

Protest Date: February 24, 2003.

Magalie R. Salas,

Secretary.

[FR Doc. 03–4472 Filed 2–25–03; 8:45 am]

BILLING CODE 6717–01–P

DEPARTMENT OF ENERGY

Federal Energy Regulatory Commission

[Docket No. RP03–254–000]

Great Lakes Gas Transmission Limited Partnership; Notice of Tariff Filing

February 20, 2003.

Take notice that on February 13, 2003, Great Lakes Gas Transmission Limited Partnership (Great Lakes) tendered for filing as part of its FERC Gas Tariff, Second Revised Volume No. 1, the following tariff sheets, proposed to be effective April 1, 2003:

Thirteenth Revised Sheet No. 1
First Revised Sheet No. 38

Great Lakes states that the proposed revised tariff sheets are being filed to remove Section 14 of the General Terms and Conditions, ''Firm Capacity Assignment

Under 18 CFR 284.242'', from its tariff, in compliance with the Commission's Order No. 892. This

Order amends the Commission's regulations by removing subpart H of part 284 (18 CFR 284.241 and 284.242), which had required interstate natural gas pipelines to assign capacity they held on other interstate pipelines to their firm shippers.

Any person desiring to be heard or to protest said filing should file a motion to intervene or a protest with the Federal Energy Regulatory Commission, 888 First Street, NE., Washington, DC 20426, in accordance with sections 385.314 or 385.211 of the Commission's Rules and Regulations. All such motions or protests must be filed in accordance with Section 154.210 of the Commission's Regulations. Protests will be considered by the Commission in determining the appropriate action to be taken, but will not serve to make protestants parties to the proceedings. Any person wishing to become a party must file a motion to intervene. This filing is available for review at the Commission in the Public Reference Room or may be viewed on the Commission's Web site at *http://www.ferc.gov* using the ''FERRIS'' link. Enter the docket number excluding the last three digits in the docket number field to access the document. For Assistance, please contact FERC Online Support at *FERCOnlineSupport@ferc.gov* or toll-free at (866) 208–3676, or TTY, contact (202) 502–8659. The Commission strongly encourages electronic filings. *See* 18 CFR 385.2001(a)(1)(iii) and the instructions on the Commission's Web site under the ''e-Filing'' link.

Comment Date: February 25, 2003.

Magalie R. Salas,

Secretary.

[FR Doc. 03–4467 Filed 2–25–03; 8:45 am]

BILLING CODE 6717–01–P

DEPARTMENT OF ENERGY

Federal Energy Regulatory Commission

[Docket No. RP03–256–000]

Honeoye Storage Corporation; Notice of Proposed Changes in FERC Gas Tariff

February 20, 2003.

Take notice that on February 14, 2003 Honeoye Storage Corporation (Honeoye) tendered for filing as part of its FERC Gas Tariff, First Revised Volume 1A, the revised tariff sheets listed on Appendix A to the filing, to be effective April 1, 2003.

Honeoye states that this filing is being made for four reasons: (1) To update its tariff to comply with the most recently approved North American Energy Standards Board (NAESB) standards; (2) to permit Honeoye to offer its customers the flexibility of revising nominations on a retroactive basis when operating conditions permit; (3) to modify certain billing and payment, creditworthiness and remedies provisions of Honeoye's tariff to enable Honeoye to obtain better credit information and protect itself against possible shipper defaults; and (4) to modify its procedures for allocating firm storage capacity to provide Honeoye with greater flexibility to determine winning bidders on a non-discriminatory basis.

Honeoye states that it is making this filing at this time so that prospective customers will have the opportunity to evaluate these changes prior to entering into gas storage agreements to become effective as of April 1, 2003. Honeoye states that there will be no change in rates and revenues under the proposed revisions.

Honeoye further states that copies of the filing are being mailed to Honeoye's jurisdictional customers and interested state regulatory agencies.

Any person desiring to be heard or to protest said filing should file a motion to intervene or a protest with the Federal Energy Regulatory Commission, 888 First Street, NE., Washington, DC 20426, in accordance with sections 385.314 or 385.211 of the Commission's Rules and Regulations. All such motions or protests must be filed in accordance with Section 154.210 of the Commission's Regulations. Protests will be considered by the Commission in determining the appropriate action to be taken, but will not serve to make protestants parties to the proceedings. Any person wishing to become a party must file a motion to intervene. This filing is available for review at the Commission in the Public Reference Room or may be viewed on the Commission's Web site at *http://www.ferc.gov* using the ''FERRIS'' link. Enter the docket number excluding the last three digits in the docket number field to access the document. For Assistance, please contact FERC Online Support at *FERCOnlineSupport@ferc.gov* or toll-free at (866) 208–3676, or TTY, contact (202) 502–8659. The Commission strongly encourages electronic filings. *See* 18 CFR 385.2001(a)(1)(iii) and the instructions on the Commission's Web site under the ''e-Filing'' link.

Comment Date: February 26, 2003.

Magalie R. Salas,

Secretary.

[FR Doc. 03–4469 Filed 2–25–03; 8:45 am]

BILLING CODE 6717–01–P

DEPARTMENT OF ENERGY

Federal Energy Regulatory Commission

[Docket No. RP03–258–000]

Iroquois Gas Transmission System, L.P.; Notice of Proposed Changes in FERC Gas Tariff

February 20, 2003.

Take notice that on February 14, 2003, Iroquois Gas Transmission System, L.P. (Iroquois) tendered for filing as part of its FERC Gas Tariff, First Revised Volume No. 1, the following tariff sheets, proposed to become effective March 14, 2003:

Tenth Revised Sheet No. 4A.
Eighth Revised Sheet No. 58.
Eighth Revised Sheet No. 59.
First Revised Sheet No. 60E.
Fifth Revised Sheet No. 67.
Original Sheet No. 4B.
First Revised Sheet No. 58A.
Original Sheet No. 60D.0l.
Third Revised Sheet No. 66A.

Iroquois states that the purpose of the tariff changes is to implement a new Extended Receipt and Extended Delivery Point Service, which would extend, on a secondary basis, a shipper's existing firm transportation path to downstream or upstream zones.

Iroquois further states that copies of its filing were served on all jurisdictional customers and interested state regulatory agencies and all parties to the proceeding.

Any person desiring to be heard or to protest said filing should file a motion to intervene or a protest with the Federal Energy Regulatory Commission, 888 First Street, NE., Washington, DC 20426, in accordance with sections 385.314 or 385.211 of the Commission's Rules and Regulations. All such motions or protests must be filed in accordance with Section 154.210 of the Commission's Regulations. Protests will be considered by the Commission in determining the appropriate action to be taken, but will not serve to make protestants parties to the proceedings. Any person wishing to become a party must file a motion to intervene. This filing is available for review at the Commission in the Public Reference Room or may be viewed on the Commission's Web site at *http://www.ferc.gov* using the ''FERRIS'' link.

Enter the docket number excluding the last three digits in the docket number field to access the document. For Assistance, please contact FERC Online Support at *FERCOnlineSupport@ferc.gov* or toll-free at (866) 208–3676, or TTY, contact (202) 502–8659. The Commission strongly encourages electronic filings. *See* 18 CFR 385.2001(a)(1)(iii) and the instructions on the Commission's Web site under the ''e-Filing'' link.

Comment Date: February 26, 2003.

Magalie R. Salas,

Secretary.

[FR Doc. 03–4471 Filed 2–25–03; 8:45 am]

BILLING CODE 6717–01–P

DEPARTMENT OF ENERGY

Federal Energy Regulatory Commission

[Docket No. RP03–226–001]

Kern River Gas Transmission Company; Notice of Compliance Filing

February 20, 2003.

Take notice that on February 11, 2003, Kern River Gas Transmission Company (Kern River) tendered for filing as part of its FERC Gas Tariff, Second Revised Volume No. 1, Substitute Third Revised Sheet No. 490, to be effective February 1, 2003.

Kern River states that the purpose of this filing is to comply with the Commission's order in this proceeding by removing a non-conforming provision from two seasonal firm transportation service agreements between Kern River and Duke Energy Trading & Marketing, L.L.C. and from one seasonal firm transportation service agreement between Kern River and National Fuel Marketing Company, LLC, thereby eliminating the need to list such agreements as non-conforming agreements in Kern River's tariff.

Kern River states that it has served a copy of this filing upon each person designated on the official service list compiled by the Secretary in this proceeding.

Any person desiring to protest said filing should file a protest with the Federal Energy Regulatory Commission, 888 First Street, NE., Washington, DC 20426, in accordance with section 385.211 of the Commission's Rules and Regulations. All such protests must be filed in accordance with Section 154.210 of the Commission's Regulations. Protests will be considered by the Commission in determining the appropriate action to be taken, but will not serve to make protestants parties to the proceedings. This filing is available for review at the Commission in the Public Reference Room or may be viewed on the Commission's Web site at *http://www.ferc.gov* using the ''FERRIS'' link. Enter the docket number excluding the last three digits in the docket number field to access the document. For Assistance, please contact FERC Online Support at *FERCOnlineSupport@ferc.gov* or toll-free at (866) 208–3676, or TTY, contact (202) 502–8659. The Commission strongly encourages electronic filings. *See* 18 CFR 385.2001(a)(1)(iii) and the instructions on the Commission's Web site under the ''e-Filing'' link.

Protest Date: February 24, 2003.

Magalie R. Salas,

Secretary.

[FR Doc. 03–4466 Filed 2–25–03; 8:45 am]

BILLING CODE 6717–01–P

DEPARTMENT OF ENERGY

Federal Energy Regulatory Commission

[Docket No. RP03–255–000]

MIGC, Inc.; Notice of Tariff Filing

February 20, 2003.

Take notice that on February 14, 2003, MIGC, Inc. (MIGC) tendered for filing as part of its FERC Gas Tariff, First Revised Volume No.1, Seventh Revised Sheet No. 90; First Revised Sheet No. 95; and Second Revised Sheet No. 115, to become effective March 18, 2003.

MIGC states that the purpose of this tariff filing is to revise MIGC's tariff to replace the physical address references with a reference to MIGC's Internet Web Site where MIGC's physical address, phone numbers and e-mail addresses are listed. MIGC states that the revisions to MIGC's tariff are necessitated by the upcoming address change of MIGC's corporate office.

Any person desiring to be heard or to protest said filing should file a motion to intervene or a protest with the Federal Energy Regulatory Commission, 888 First Street, NE., Washington, DC 20426, in accordance with sections 385.314 or 385.211 of the Commission's Rules and Regulations. All such motions or protests must be filed in accordance with Section 154.210 of the Commission's Regulations. Protests will be considered by the Commission in determining the appropriate action to be taken, but will not serve to make protestants parties to the proceedings. Any person wishing to become a party must file a motion to intervene. This filing is available for review at the Commission in the Public Reference Room or may be viewed on the Commission's Web site at *http://www.ferc.gov* using the ''FERRIS'' link. Enter the docket number excluding the last three digits in the docket number field to access the document. For Assistance, please contact FERC Online Support at *FERCOnlineSupport@ferc.gov* or toll-free at (866) 208–3676, or TTY, contact (202) 502–8659. The Commission strongly encourages electronic filings. *See* 18 CFR 385.2001(a)(1)(iii) and the instructions on the Commission's Web site under the ''e-Filing'' link.

Comment Date: February 26, 2003.

Magalie R. Salas,

Secretary.

[FR Doc. 03–4468 Filed 2–25–03; 8:45 am]

BILLING CODE 6717–01–P

DEPARTMENT OF ENERGY

Federal Energy Regulatory Commission

[Docket No. RP03–257–000]

Natural Gas Pipeline Company of America; Notice of Proposed Changes in FERC Gas Tariff

February 20, 2003.

Take notice that on February 14, 2003, Natural Gas Pipeline Company of America (Natural) tendered for filing to become part of its FERC Gas Tariff, Sixth Revised Volume No. 1, Second Revised Sheet No. 1A and Twenty-First Revised Sheet No. 22, to be effective March 1, 2003.

Natural states that the purpose of this filing is to eliminate the surcharge under Section 21 of the General Terms and Conditions of Natural's Tariff.

Natural states that copies of the filing are being mailed to its customers and state regulatory agencies.

Any person desiring to be heard or to protest said filing should file a motion to intervene or a protest with the Federal Energy Regulatory Commission, 888 First Street, NE., Washington, DC 20426, in accordance with sections 385.314 or 385.211 of the Commission's Rules and Regulations. All such motions or protests must be filed in accordance with Section 154.210 of the Commission's Regulations. Protests will be considered by the Commission in determining the appropriate action to be taken, but will not serve to make protestants parties to the proceedings. Any person wishing to become a party must file a motion to intervene. This filing is available for review at the Commission in the Public Reference

Room or may be viewed on the Commission's Web site at *http://www.ferc.gov* using the ''FERRIS'' link. Enter the docket number excluding the last three digits in the docket number field to access the document. For Assistance, please contact FERC Online Support at *FERCOnlineSupport@ferc.gov* or toll-free at (866) 208–3676, or TTY, contact (202) 502–8659. The Commission strongly encourages electronic filings. *See* 18 CFR 385.2001(a)(1)(iii) and the instructions on the Commission's Web site under the ''e-Filing'' link.

Comment Date: February 26, 2003.

Magalie R. Salas,

Secretary.

[FR Doc. 03–4470 Filed 2–25–03; 8:45 am]

BILLING CODE 6717–01–P

DEPARTMENT OF ENERGY

Federal Energy Regulatory Commission

[Docket No. CP93–618–014]

PG&E Gas Transmission, Northwest Corporation, Notice of Annual Report

February 20, 2003.

Take notice that on February 13, 2003, PG&E Gas Transmission, Northwest Corporation (GTN) tendered for filing certain revised schedules to its Medford Lateral ''Annual Report on Deferred Revenue Recovery Mechanism and Revenue Reconciliation for the Year Ending October 31, 2002.''

GTN asserts that the purpose of this filing is to include revenue from an additional transportation contract as an offset to Avista's deferred account balance.

GTN further states that a copy of this filing has been served on GTN's jurisdictional customers and interested state regulatory agencies, as well as the Official Service list compiled by the Secretary in this proceeding.

Any person desiring to protest said filing should file a protest with the Federal Energy Regulatory Commission, 888 First Street, NE., Washington, DC 20426, in accordance with section 385.211 of the Commission's Rules and Regulations. All such protests must be filed on or before the comment date. Protests will be considered by the Commission in determining the appropriate action to be taken, but will not serve to make protestants parties to the proceedings. This filing is available for review at the Commission in the Public Reference Room or may be viewed on the Commission's Web site at *http://www.ferc.gov* using the ''FERRIS'' link. Enter the docket number excluding the last three digits in the docket number field to access the document. Comments, protests and interventions may be filed electronically via the Internet in lieu of paper. For Assistance, please contact FERC Online Support at *FERCOnlineSupport@ferc.gov* or toll-free at (866) 208–3676, or TTY, contact (202) 502–8659. The Commission strongly encourages electronic filings. *See* 18 CFR 385.2001(a)(1)(iii) and the instructions on the Commission's Web site under the ''e-Filing'' link.

Comment Date: February 27, 2003.

Magalie R. Salas,

Secretary.

[FR Doc. 03–4463 Filed 2–25–03; 8:45 am]

BILLING CODE 6717–01–P

DEPARTMENT OF ENERGY

Federal Energy Regulatory Commission

[Docket No. RP02–455–002]

PG&E Gas Transmission, Northwest Corporation; Notice of Compliance Filing

February 20, 2003.

Take notice that on February 14, 2003, PG&E Gas Transmission, Northwest Corporation (GTN) tendered for filing as part of its FERC Gas Tariff, Second Revised Volume No. 1–A, Second Revised Sheet No. 147, First Revised Sheet No. 148, and First Revised Sheet No. 149, with an effective date of October 1, 2002.

GTN states that the filing is being made to comply with requirements of the Commission's January 31, 2003 Letter Order accepting GTN's October 15, 2002 compliance filing in this docket subject to conditions. GTN proposes that these tariff sheets be made effective October 1, 2002, consistent with the effective date approved by the Commission for the tariff sheets included in GTN's previous filings in this docket.

GTN further states that a copy of this filing has been served on GTN's jurisdictional customers and interested state regulatory agencies.

Any person desiring to protest said filing should file a protest with the Federal Energy Regulatory Commission, 888 First Street, NE., Washington, DC 20426, in accordance with Section 385.211 of the Commission's Rules and Regulations. All such protests must be filed in accordance with section 154.210 of the Commission's Regulations. Protests will be considered by the Commission in determining the appropriate action to be taken, but will not serve to make protestants parties to the proceedings. This filing is available for review at the Commission in the Public Reference Room or may be viewed on the Commission's Web site at *http://www.ferc.gov* using the ''FERRIS'' link. Enter the docket number excluding the last three digits in the docket number field to access the document. For Assistance, please contact FERC Online Support at *FERCOnlineSupport@ferc.gov* or toll-free at (866) 208–3676, or TTY, contact (202) 502–8659. The Commission strongly encourages electronic filings. *See* 18 CFR 385.2001(a)(1)(iii) and the instructions on the Commission's Web site under the ''e-Filing'' link.

Protest Date: February 26, 2003.

Magalie R. Salas,

Secretary.

[FR Doc. 03–4465 Filed 2–25–03; 8:45 am]

BILLING CODE 6717–01–P

DEPARTMENT OF ENERGY

Federal Energy Regulatory Commission

[Docket Nos. RP00–488–002 and RP03–179–001]

Portland Natural Gas Transmission System; Notice of Compliance Filing

February 20, 2003.

Take notice that on February 14, 2003, Portland Natural Gas Transmission System (PNGTS) tendered for filing as part of its FERC Gas Tariff, Original Volume No. 1, the revised tariff sheets contained in Appendix A of the filing.

PNGTS states that the purpose of this filing is to comply with the Commission's January 30, 2003 Order on PNGTS's Order No. 637 compliance filings.

PNGTS further states that copies of this filing are being served on all jurisdictional customers, applicable state commissions, and to parties on the official service list compiled by the Secretary of the Commission in these proceedings.

Any person desiring to protest said filing should file a protest with the Federal Energy Regulatory Commission, 888 First Street, NE., Washington, DC 20426, in accordance with section 385.211 of the Commission's Rules and Regulations. All such protests must be filed in accordance with Section 154.210 of the Commission's Regulations. Protests will be considered by the Commission in determining the appropriate action to be taken, but will not serve to make protestants parties to

the proceedings. This filing is available for review at the Commission in the Public Reference Room or may be viewed on the Commission's Web site at *http://www.ferc.gov* using the ''FERRIS'' link. Enter the docket number excluding the last three digits in the docket number field to access the document. For Assistance, please contact FERC Online Support at *FERCOnlineSupport@ferc.gov* or toll-free at (866) 208–3676, or TTY, contact (202) 502–8659. The Commission strongly encourages electronic filings. *See* 18 CFR 385.2001(a)(1)(iii) and the instructions on the Commission's Web site under the ''e-Filing'' link.

Protest Date: February 26, 2003.

Magalie R. Salas,

Secretary.

[FR Doc. 03–4464 Filed 2–25–03; 8:45 am]

BILLING CODE 6717–01–P

DEPARTMENT OF ENERGY

Federal Energy Regulatory Commission

[Docket No. RP99–480–006]

Texas Eastern Transmission, LP; Notice of Compliance Filing

February 20, 2003.

Take notice that on February 14, 2003, Texas Eastern Transmission, LP (Texas Eastern) tendered for filing as part of its FERC Gas Tariff, Seventh Revised Volume No. 1, the revised tariff sheets listed in Appendix A of the filing, to be effective on the date of the Commission's order approving the tariff sheets.

Texas Eastern states that the purpose of this filing is to comply with the Letter Order issued by the Commission in Docket No. RP99–480–003 on January 15, 2003 [102 FERC ¶ 61,028 (2003)].

Texas Eastern further states that it is hereby submitting tariff revisions that comply with such order and, in particular, clarify that the tariff provides for differing levels of maximum daily quantities for Rate Schedule FT–1, as well as Rate Schedules CDS, SCT, LLFT and VKFT in Texas Eastern's FERC Gas Tariff, Seventh Revised Volume No. 1.

Texas Eastern indicates that copies of its filing have been mailed to all affected customers of Texas Eastern and interested state commissions, as well as to all parties listed on the Official Service List compiled by the Secretary of the Commission in Docket No. RP99–480–003.

Any person desiring to protest said filing should file a protest with the Federal Energy Regulatory Commission, 888 First Street, NE., Washington, DC 20426, in accordance with section 385.211 of the Commission's Rules and Regulations. All such protests must be filed in accordance with Section 154.210 of the Commission's Regulations. Protests will be considered by the Commission in determining the appropriate action to be taken, but will not serve to make protestants parties to the proceedings. This filing is available for review at the Commission in the Public Reference Room or may be viewed on the Commission's Web site at *http://www.ferc.gov* using the ''FERRIS'' link. Enter the docket number excluding the last three digits in the docket number field to access the document. For Assistance, please contact FERC Online Support at *FERCOnlineSupport@ferc.gov* or toll-free at (866) 208–3676, or TTY, contact (202) 502–8659. The Commission strongly encourages electronic filings. *See* 18 CFR 385.2001(a)(1)(iii) and the instructions on the Commission's Web site under the ''e-Filing'' link.

Protest Date: February 26, 2003.

Magalie R. Salas,

Secretary.

[FR Doc. 03–4473 Filed 2–25–03; 8:45 am]

BILLING CODE 6717–01–P

DEPARTMENT OF ENERGY

Federal Energy Regulatory Commission

[Docket No. ER03–15–002, et al.]

Consumers Energy Company, et al.; Electric Rate and Corporate Filings

February 14, 2003.

The following filings have been made with the Commission. The filings are listed in ascending order within each docket classification.

1. Consumers Energy Company

[Docket No. ER03–15–002]

Take notice that on February 12, 2003, Consumers Energy Company (Consumers) tendered for filing changes to its First Revised Rate Schedule No. 116, pursuant to the Commission's February 6, 2003 Order in this docket. (Consumers notes that substantially the same filing was also made earlier and docketed in Docket No. ER03–388–000.) The revised pages being filed are:

Second Revised Sheet Nos. 11 and 23

Consumers states that copies of the filing were served upon those on the official service lists in this docket and in Docket No. ER03–388–000.

Comment Date: March 5, 2003.

2. American Electric Power Company

[Docket No. ER03–95–002]

Take notice that on February 12, 2003, American Electric Power Service Corporation, on behalf of the operating companies of the American Electric Power System (collectively AEP) filed amendments to service agreements under AEP's Open Access Transmission Tariff (OATT) for long-term firm point-to-point transmission service to Duke Energy Trading and Marketing, Inc. The filing was made in compliance with the Commission's Order Conditionally Accepting Filing and Denying Waiver of Notice Requirements issued in Docket No. ER03–95–001 on December 27, 2002.

Comment Date: March 5, 2003.

3. Boston Edison Company

[Docket No. ER03–529–000]

Take notice that on February 11, 2003, Boston Edison Company (Boston Edison) tendered for filing an executed Related Facilities Agreement between Boston Edison and Entergy Nuclear Generation Company (Entergy). Boston Edison requests an effective date of the Agreement of April 11, 2003.

Boston Edison states that it has served a copy of the filing on Entergy and the Massachusetts Department of Telecommunications and Energy.

Comment Date: March 4, 2003.

4. Texas-New Mexico Power Company

[Docket No. ES03–25–000]

Take notice that on February 11, 2003, Texas-New Mexico Power Company submitted an application pursuant to section 204 of the Federal Power Act seeking authorization to issue long-term, unsecured debt in an amount not to exceed $150 million.

Comment Date: March 7, 2003.

Standard Paragraph

Any person desiring to intervene or to protest this filing should file with the Federal Energy Regulatory Commission, 888 First Street, NE., Washington, DC 20426, in accordance with Rules 211 and 214 of the Commission's Rules of Practice and Procedure (18 CFR 385.211 and 385.214). Protests will be considered by the Commission in determining the appropriate action to be taken, but will not serve to make protestants parties to the proceeding. Any person wishing to become a party must file a motion to intervene. All such motions or protests should be filed on or before the comment date, and, to the extent applicable, must be served on the applicant and on any other person designated on the official service list. This filing is available for review at the

Commission or may be viewed on the Commission's Web site at *http://www.ferc.gov* , using the ''FERRIS'' link. Enter the docket number excluding the last three digits in the docket number filed to access the document. For assistance, contact FERC Online Support at *FERCOnlineSupport@ferc.gov* or toll-free at (866)208–3676, or for TTY, contact (202)502–8659. Protests and interventions may be filed electronically via the Internet in lieu of paper; *see* 18 CFR 385.2001(a)(1)(iii) and the instructions on the Commission's Web site under the ''e-Filing'' link. The Commission strongly encourages electronic filings.

Magalie R. Salas,

Secretary.

[FR Doc. 03–4562 Filed 2–25–03; 8:45 am]

BILLING CODE 6717–01–P

DEPARTMENT OF ENERGY

Federal Energy Regulatory Commission

[Docket No. ER01–833–001, et al.]

Pacific Gas and Electric Company, et al.; Electric Rate and Corporate Filings

February 19, 2003.

The following filings have been made with the Commission. The filings are listed in ascending order within each docket classification.

1. Pacific Gas and Electric Company

[Docket No. ER01–833–001]

Take notice that on February 14, 2003, Pacific Gas and Electric Company (PG&E) tendered for filing copies of a revised Wholesale Distribution Tariff (WDT) Service Agreement (Service Agreement) between PG&E and Modesto Irrigation District (MID) and a Letter Agreement (Letter Agreement) between PG&E and MID.

PG&E states that the Service Agreement is submitted pursuant to the PG&E WDT and permits PG&E to recover the ongoing costs for service required over PG&E's distribution facilities. The Letter Agreement memorializes the understanding between PG&E and MID regarding the revised Service Agreement under PG&E's WDT for service to MID's Mountain House retail load.

PG&E has requested an effective date of January 1, 2001. PG&E also states that copies of this filing have been served upon MID, the California Independent System Operator Corporation and the California Public Utilities Commission.

Comment Date: March 7, 2003.

2. U.S. Power and Gas Pennsylvania LLC

[Docket No. ER03–261–001]

Take notice that on February 11, 2003, U.S. Power and Gas Pennsylvania LLC filed amendments to its market-base rate authority proposal.

Comment Date: March 4, 2003.

3. Midwest Independent Transmission System Operator, Inc.

[Docket No. ER03–401–001]

Take notice that on February 13, 2003, the Midwest Independent Transmission System Operator, Inc. (Midwest ISO) tendered for filing its errata revisions to Second Revised Sheet No. 339 of Attachment M of the Midwest ISO Open Access Transmission Tariff, FERC Electric Tariff, Second Revised Volume No. 1. Applicant requests the originally requested effective date of February 1, 2003 for the substitute sheet.

The Midwest ISO has requested waiver of the requirements set forth in 18 CFR 385.2010. The Midwest ISO states that it has electronically served a copy of this filing, with attachments, upon all Midwest ISO Members, Member representatives of Transmission Owners and Non-Transmission Owners, the Midwest ISO Advisory Committee participants, Policy Subcommittee participants, as well as all state commissions within the region. In addition, the filing has been electronically posted on the Midwest ISO's Web site at www.midwestiso.org under the heading Filings to FERC'' for other interested parties in this matter.

Comment Date: March 6, 2003.

4. Midwest Independent Transmission System Operator, Inc.

[Docket No. ER03–422–001]

Take notice that on February 13, 2003, the Midwest Independent Transmission System Operator, Inc. (Midwest ISO) tendered for filing its errata revisions to Original Sheet No. 213A of Schedule 10 of the Midwest ISO Open Access Transmission Tariff, FERC Electric Tariff, Second Revised Volume No. 1. Applicant requests the originally requested effective date of January 17, 2003 for the substitute sheet.

The Midwest ISO has requested waiver of the requirements set forth in 18 CFR 385.2010. The Midwest ISO states that it has electronically served a copy of this filing, with attachments, upon all Midwest ISO Members, Member representatives of Transmission Owners and Non-Transmission Owners, the Midwest ISO Advisory Committee participants, Policy Subcommittee participants, as well as all state commissions within the region. In addition, the filing has been electronically posted on the Midwest ISO's Web site at *http://www.midwestiso.org* under the heading Filings to FERC'' for other interested parties in this matter.

Comment Date: March 6, 2003.

5. PacifiCorp

[Docket No. ER03–530–000]

Take notice that PacifiCorp on February 13, 2003, tendered for filing with the Federal Energy Regulatory Commission (Commission) in accordance with 18 CFR part 35 of the Commission's Rules and Regulations, Notices of Cancellation of: (1) Service Agreements No. 14 and No. 15 under PacifiCorp's FERC Electric Tariff, Third Revised Volume No. 12 between Public Utility District No. 1 of Clark County, Washington ; (2) PacifiCorp, and Service Agreement No. 43 under PacifiCorp's FERC Electric Tariff, Third Revised Volume No. 12 between Electrical District No. 2 of Pinal County, Arizona and PacifiCorp and (3) Service Agreement No. 49 under PacifiCorp's FERC Electric Tariff, Third Revised Volume No. 12 between City of Mesa, Arizona and PacifiCorp.

PacifiCorp states that copies of this filing were served on the Public Utility Commission of Oregon and the Washington Utilities and Transportation Commission.

Comment Date: March 6, 2003.

6. PJM Interconnection, L.L.C.

[Docket No. ER03–531–000]

Take notice that on February 13, 2003, PJM Interconnection, L.L.C. (PJM) on behalf of three of its members—Jersey Central Power & Light Company, Metropolitan Edison Company and Pennsylvania Electric Company (the FirstEnergy Companies) submitted for filing amendments to Attachments M GPU and N GPU to the PJM Open Access Transmission Tariff. Attachments M GPU and N GPU are procedure manuals under which the FirstEnergy Companies (formerly d/b/a as GPU Energy) calculate retail suppliers' total hourly energy obligations and peak load shares. The attachments are amended to reflect that FirstEnergy Companies no longer do business as GPU Energy and no longer use Dynamic Load Profiling.

PJM, on behalf of FirstEnergy Companies, requested an effective date of February 14, 2003.

PJM states that copies of this filing were served upon all PJM members, including FirstEnergy Companies, and each state electric utility regulatory commission in the PJM region.

Comment Date: March 6, 2003.

7. Consumers Energy Company, on behalf of Michigan Electric Transmission Co.

[Docket No. ER03–532–000]

Take notice that on February 12, 2003, Consumers Energy Company (Consumers) tendered for filing the following tariff sheets as part of Michigan Electric Transmission Company (Michigan Transco) FERC Electric Tariff, Original Volume No. 1.

First Revised Sheet Nos. 36, 56, 73 through 79, 82 through 88 and 114

All of the Sheets are to become effective April 1, 2001. Consumers states that the Original version of these sheets was accepted in Docket No. ER01–414–000, subject to the outcome of Docket Nos. OA96–77–000, *et al.* Consumers indicates that the instant filing is to reflect the final outcome of Docket Nos. OA96–77–000, *et al.*

Consumers states that copies of the filing were served upon those on the official service list in Docket No. ER01–414–000.

Comment Date: March 5, 2003.

8. Alliant Energy Neenah, LLC

[Docket No. ER03–533–000]

Take notice that on February 13, 2003, Alliant Energy Neenah, LLC (Alliant Energy Neenah) submitted to the Federal Energy Regulatory Commission (Commission) a Notice of Succession notifying the Commission that it has succeeded to the market-based rate wholesale power sales rate schedule (the Rate Schedule) of Mirant Neenah, LLC, First Revised Rate Schedule FERC No. 1. In addition, Alliant Energy Neenah files the Rate Schedule, updated as appropriate and in conformance with Order Nos. 614 and 2001, as Alliant Energy Neenah, LLC, Original Rate Schedule FERC No. 1.

Comment Date: March 6, 2003.

9. Ingenco Wholesale Power, L.L.C.

[Docket No. ER03–534–000]

Take notice that on February 13, 2003, Ingenco Wholesale Power, L.L.C. (Ingenco Wholesale) petitioned the Federal Energy Regulatory Commission (Commission) for acceptance of Ingenco Wholesale Power, L.L.C. Rate Schedule FERC No. 1; the granting of certain blanket approvals, including the authority to sell electricity at market-based rates; and the waiver of certain Commission regulations.

Ingenco Wholesale states that it was formed for the purpose of owning Ingenco—Mountain View, a 12 MW electric generating facility located in Mountain View, Pennsylvania. Ingenco Wholesale will also hold an interest in other electric generation facilities currently under development and sell the output of those facilities, as well as a number of facilities that are current qualifying facilities, as is detailed in its application.

Comment Date: March 6, 2003.

10. Florida Power & Light Company

[Docket No. ER03–535–000]

Take notice that on February 14, 2003, Florida Power & Light Company (FPL) tendered for filing an executed, revised Interconnection & Operation Agreement between FPL and CPV Gulfcoast, Ltd. FPL requests that this agreement be made effective upon execution by the parties, February 13, 2003, as mutually agreed by the parties.

Comment Date: March 7, 2003.

11. Deseret Generation & Transmission Co-operative, Inc.

[Docket No. ER03–536–000]

Take notice that on February 14, 2003, Deseret Generation & Transmission Co-operative, Inc. (Deseret) tendered certain amendments to First Revised Service Agreement Nos. 1 through 6 to its FERC Electric Tariff, Original Volume No. 1, under which Deseret provides cost-based wholesale electric service to each of its six Member cooperatives.

Deseret states that a copy of this filing has been served upon all of Deseret's members. Deseret requests an effective date of February 15, 2003.

Comment Date: March 7, 2003.

Standard Paragraph

Any person desiring to intervene or to protest this filing should file with the Federal Energy Regulatory Commission, 888 First Street, NE., Washington, DC 20426, in accordance with Rules 211 and 214 of the Commission's Rules of Practice and Procedure (18 CFR 385.211 and 385.214). Protests will be considered by the Commission in determining the appropriate action to be taken, but will not serve to make protestants parties to the proceeding. Any person wishing to become a party must file a motion to intervene. All such motions or protests should be filed on or before the comment date, and, to the extent applicable, must be served on the applicant and on any other person designated on the official service list. This filing is available for review at the Commission or may be viewed on the Commission's Web site at *http://www.ferc.gov* , using the ''FERRIS'' link. Enter the docket number excluding the last three digits in the docket number filed to access the document. For assistance, contact FERC Online Support at *FERCOnlineSupport@ferc.gov* or toll-free at (866)208–3676, or for TTY, contact (202)502–8659. Protests and interventions may be filed electronically via the Internet in lieu of paper; *see* 18 CFR 385.2001(a)(1)(iii) and the instructions on the Commission's Web site under the ''e-Filing'' link. The Commission strongly encourages electronic filings.

Magalie R. Salas,

Secretary.

[FR Doc. 03–4561 Filed 2–25–03; 8:45 am]

BILLING CODE 6717–01–P

ENVIRONMENTAL PROTECTION AGENCY

[OPP–2003–0004; FRL–7291–8]

Application for Experimental Use Permit to Ship and Use a Pesticide for Experimental Purposes Only; Renewal of Pesticide Information Collection Activities and Request for Comments

AGENCY: Environmental Protection Agency (EPA).

ACTION: Notice.

SUMMARY: In compliance with the Paperwork Reduction Act (PRA) (44 U.S.C. 3501 *et seq.*) this notice announces that EPA is seeking public comment on the following Information Collection Request (ICR): Application for Experimental Use Permit (EUP) to Ship and Use a Pesticide for Experimental Purposes Only (EPA ICR No. 0276.12, OMB Control No. 2070–0040). This is a request to renew an existing ICR that is currently approved and due to expire September 30, 2003. The ICR describes the nature of the information collection activity and its expected burden and costs. Before submitting this ICR to the Office of Management and Budget (OMB) for review and approval under the PRA, EPA is soliciting comments on specific aspects of the collection.

DATES: Written comments, identified by the docket ID number OPP–2003–0004, must be received on or before April 28, 2003.

ADDRESSES: Comments may be submitted electronically, by mail, or through hand delivery/courier. Follow the detailed instructions as provided in Unit III. of the **SUPPLEMENTARY INFORMATION**.

FOR FURTHER INFORMATION CONTACT: Nancy Vogel, Field and External Affairs Division (7506C), Office of Pesticide Programs, Environmental Protection Agency, 1200 Pennsylvania Ave., NW., Washington, DC 20460–0001; telephone

number: (703) 305–6475; fax number: (703) 305–5884; e-mail address: *vogel.nancy@epa.gov.*

SUPPLEMENTARY INFORMATION:

I. Does this Action Apply to Me?

You may be potentially affected by this action if you are a potential pesticide registrant, an independent researcher or testing laboratory, or any similar agent or consultant of a pesticide manufacturer wishing to generate information necessary to register a product under section 3 of the Federal Insecticide, Fungicide, and Rodenticide Act (FIFRA) in accordance with the regulations found in 40 CFR 172.2(a). Potentially affected entities may include, but are not limited to:

- Pesticide and other agricultural manufacturing (NAICS 325320), e.g., Pesticide registrants who wish to obtain an EUP to ship and use a pesticide for experimental purposes only.

This listing is not intended to be exhaustive, but rather provides a guide for readers regarding entities likely to be affected by this action. Other types of entities not listed above could also be affected. The North American Industrial Classification System (NAICS) codes have been provided to assist you and others in determining whether this action might apply to certain entities. To determine whether you or your business may be affected by this action, you should carefully examine the applicability provisions in FIFRA, the Food Quality Protection Act (FQPA) of 1996, and section 408 of the Federal Food, Drug, and Cosmetic Act (FFDCA). If you have any questions regarding the applicability of this action to a particular entity, consult the person listed under **FOR FURTHER INFORMATION CONTACT**.

II. How Can I Get Copies of This Document and Other Related Information?

A. Docket

EPA has established an official public docket for this action under docket identification (ID) number OPP–2003–0004. The official public docket consists of the documents specifically referenced in this action, any public comments received, and other information related to this action. Although a part of the official docket, the public docket does not include Confidential Business Information (CBI) or other information whose disclosure is restricted by statute. The official public docket is the collection of materials that is available for public viewing at the Public Information and Records Integrity Branch (PIRIB), Rm. 119, Crystal Mall #2, 1921 Jefferson Davis Hwy., Arlington, VA. This docket facility is open from 8:30 a.m. to 4 p.m., Monday through Friday, excluding legal holidays. The docket telephone number is (703) 305–5805.

B. Electronic Access

You may access this **Federal Register** document electronically through the EPA Internet under the ''**Federal Register**'' listings at *http://www.epa.gov/fedrgstr/.*

An electronic version of the public docket is available through EPA's electronic public docket and comment system, EPA Dockets. You may use EPA Dockets at http://www.epa.gov/edocket/ to submit or view public comments, access the index listing of the contents of the official public docket, and to access those documents in the public docket that are available electronically. Once in the system, select ''search,'' then key in the appropriate docket ID number.

Certain types of information will not be placed in the EPA Dockets. Information claimed as CBI and other information whose disclosure is restricted by statute, which is not included in the official public docket, will not be available for public viewing in EPA's electronic public docket. EPA's policy is that copyrighted material will not be placed in EPA's electronic public docket but will be available only in printed, paper form in the official public docket. To the extent feasible, publicly available docket materials will be made available in EPA's electronic public docket. When a document is selected from the index list in EPA Dockets, the system will identify whether the document is available for viewing in EPA's electronic public docket. Although not all docket materials may be available electronically, you may still access any of the publicly available docket materials through the docket facility identified in Unit II.A. EPA intends to work towards providing electronic access to all of the publicly available docket materials through EPA's electronic public docket.

For public commenters, it is important to note that EPA's policy is that public comments, whether submitted electronically or in paper, will be made available for public viewing in EPA's electronic public docket as EPA receives them and without change, unless the comment contains copyrighted material, CBI, or other information whose disclosure is restricted by statute. When EPA identifies a comment containing copyrighted material, EPA will provide a reference to that material in the version of the comment that is placed in EPA's electronic public docket. The entire printed comment, including the copyrighted material, will be available in the public docket.

Public comments submitted on computer disks that are mailed or delivered to the docket will be transferred to EPA's electronic public docket. Public comments that are mailed or delivered to the docket will be scanned and placed in EPA's electronic public docket. Where practical, physical objects will be photographed, and the photograph will be placed in EPA's electronic public docket along with a brief description written by the docket staff.

III. How Can I Respond to this Action?

A. How and To Whom Do I Submit Comments?

You may submit comments electronically, by mail, or through hand delivery/courier. To ensure proper receipt by EPA, identify the appropriate docket ID number in the subject line on the first page of your comment. Please ensure that your comments are submitted within the specified comment period. Comments received after the close of the comment period will be marked ''late.'' EPA is not required to consider these late comments. If you wish to submit CBI or information that is otherwise protected by statute, please follow the instructions in Unit III.B. Do not use EPA Dockets or e-mail to submit CBI or information protected by statute.

1. *Electronically.* If you submit an electronic comment as prescribed in this unit, EPA recommends that you include your name, mailing address, and an e-mail address or other contact information in the body of your comment. Also include this contact information on the outside of any disk or CD ROM you submit, and in any cover letter accompanying the disk or CD ROM. This ensures that you can be identified as the submitter of the comment and allows EPA to contact you in case EPA cannot read your comment due to technical difficulties or needs further information on the substance of your comment. EPA's policy is that EPA will not edit your comment, and any identifying or contact information provided in the body of a comment will be included as part of the comment that is placed in the official public docket, and made available in EPA's electronic public docket. If EPA cannot read your comment due to technical difficulties and cannot contact you for clarification, EPA may not be able to consider your comment.

i. *EPA Dockets*. Your use of EPA's electronic public docket to submit comments to EPA electronically is EPA's preferred method for receiving comments. Go directly to EPA Dockets at http://www.epa.gov/edocket, and follow the online instructions for submitting comments. Once in the system, select ''search,'' and then key in docket ID number OPP–2003–0004. The system is an ''anonymous access'' system, which means EPA will not know your identity, e-mail address, or other contact information unless you provide it in the body of your comment.

ii. *E-mail*. Comments may be sent by e-mail to *opp-docket@epa.gov,* Attention: Docket ID Number OPP–2003–0004. In contrast to EPA's electronic public docket, EPA's e-mail system is not an ''anonymous access'' system. If you send an e-mail comment directly to the docket without going through EPA's electronic public docket, EPA's e-mail system automatically captures your e-mail address. E-mail addresses that are automatically captured by EPA's e-mail system are included as part of the comment that is placed in the official public docket, and made available in EPA's electronic public docket.

iii. *Disk or CD ROM*. You may submit comments on a disk or CD ROM that you mail to the mailing address identified in Unit III.A. These electronic submissions will be accepted in WordPerfect or ASCII file format. Avoid the use of special characters and any form of encryption.

2. *By mail*. Send your comments to: Public Information and Records Integrity Branch (PIRIB) (7502C), Office of Pesticide Programs (OPP), Environmental Protection Agency, 1200 Pennsylvania Ave., NW., Washington, DC 20460–0001, Attention: Docket ID Number OPP–2003–0004.

3. *By hand delivery or courier*. Deliver your comments to: Public Information and Records Integrity Branch (PIRIB), Office of Pesticide Programs (OPP), Environmental Protection Agency, Rm. 119, Crystal Mall #2, 1921 Jefferson Davis Hwy., Arlington, VA., Attention: Docket ID Number OPP–2003–0004. Such deliveries are only accepted during the docket's normal hours of operation as identified in Unit II.A.

B. How Should I Submit CBI To the Agency?

Do not submit information that you consider to be CBI electronically through EPA's electronic public docket or by e-mail. You may claim information that you submit to EPA as CBI by marking any part or all of that information as CBI (if you submit CBI on disk or CD ROM, mark the outside of the disk or CD ROM as CBI and then identify electronically within the disk or CD ROM the specific information that is CBI). Information so marked will not be disclosed except in accordance with procedures set forth in 40 CFR part 2.

In addition to one complete version of the comment that includes any information claimed as CBI, a copy of the comment that does not contain the information claimed as CBI must be submitted for inclusion in the public docket and EPA's electronic public docket. If you submit the copy that does not contain CBI on disk or CD ROM, mark the outside of the disk or CD ROM clearly that it does not contain CBI. Information not marked as CBI will be included in the public docket and EPA's electronic public docket without prior notice. If you have any questions about CBI or the procedures for claiming CBI, please consult the person listed under **FOR FURTHER INFORMATION CONTACT**.

C. What Should I Consider when I Prepare My Comments for EPA?

You may find the following suggestions helpful for preparing your comments:

1. Explain your views as clearly as possible.
2. Describe any assumptions that you used.
3. Provide copies of any technical information and/or data you used that support your views.
4. If you estimate potential burden or costs, explain how you arrived at the estimate that you provide.
5. Provide specific examples to illustrate your concerns.
6. Offer alternative ways to improve the collection activity.
7. Make sure to submit your comments by the deadline in this notice.
8. To ensure proper receipt by EPA, be sure to identify the docket ID number assigned to this action in the subject line on the first page of your response. You may also provide the name, date, and **Federal Register** citation.

D. What Information is EPA Particularly Interested in?

Pursuant to section 3506(c)(2)(A) of the PRA, EPA specifically solicits comments and information to enable it to:

1. Evaluate whether the proposed collections of information are necessary for the proper performance of the functions of the Agency, including whether the information will have practical utility.
2. Evaluate the accuracy of the Agency's estimates of the burdens of the proposed collections of information.
3. Enhance the quality, utility, and clarity of the information to be collected.
4. Minimize the burden of the collections of information on those who are to respond, including through the use of appropriate automated or electronic collection technologies or other forms of information technology, e.g., permitting electronic submission of responses.

IV. What Information Collection Activity or ICR Does this Action Apply to?

EPA is seeking comments on the following ICR:

Title: Application for Experimental Use Permit (EUP) to Ship and Use a Pesticide for Experimental Purposes Only.

ICR numbers: EPA ICR No. 0276.12, OMB Control No. 2070–0040.

ICR status: This ICR is a renewal of an existing ICR that is currently approved by OMB and is due to expire September 30, 2003.

Abstract: This information collection program provides the EPA with the data necessary to determine whether to issue an EUP under section 5 of FIFRA, as amended. FIFRA requires that before a pesticide product may be distributed or sold in the United States it must be registered by EPA. Section 5 of FIFRA authorizes EPA to issue EUPs which allow pesticide companies to temporarily ship pesticide products for experimental use for the purpose of gathering data necessary to support the application for registration of a pesticide product. In general, EUPs are either issued for a pesticide not registered with the Agency or for a registered pesticide for a use not registered with the Agency. An Agency may not conduct or sponsor, and a person is not required to respond to, a collection of information unless it displays a currently valid OMB control number. The OMB control numbers for EPA's regulations in title 40 of the CFR, after appearing in the **Federal Register**, are listed in 40 CFR part 9, and included on the related collection instrument or form, if applicable.

V. What are EPA's Burden and Cost Estimates for this ICR?

Under the PRA, ''burden'' means the total time, effort, or financial resources expended by persons to generate, maintain, retain, or disclose or provide information to or for a Federal Agency. For this collection it includes the time needed to review instructions; develop, acquire, install, and utilize technology and systems for the purposes of collecting, validating, and verifying information, processing and

maintaining information, and disclosing and providing information; adjust the existing ways to comply with any previously applicable instructions and requirements; train personnel to be able to respond to a collection of information; search data sources; complete and review the collection of information; and transmit or otherwise disclose the information.

The ICR provides a detailed explanation of this estimate, which is only briefly summarized in this notice. The annual public burden for this ICR is estimated to be 757.50 hours. The following is a summary of the estimates taken from the ICR:

Respondents/affected entities: Pesticide registrants who wish to obtain an EUP to ship and use a pesticide for experimental purposes only.

Estimated total number of potential respondents: 75.

Frequency of response: As needed.

Estimated total/average number of responses for each respondent: 1.

Estimated total annual burden hours: 757.50.

Estimated total annual burden costs: $64,950.

VI. Are There Changes in the Estimates from the Last Approval?

Total respondent costs associated with this program rose from $61,297.50 to $64,950. Total Agency costs rose from $67,950 to $77,925. Changes to total costs associated with this program are due to the increase in labor rates, reflecting the most current estimates.

VII. What is the Next Step in the Process for this ICR?

EPA will consider the comments received and amend the ICR as appropriate. The final ICR package will then be submitted to OMB for review and approval pursuant to 5 CFR 1320.12. EPA will issue another **Federal Register** notice pursuant to 5 CFR 1320.5(a)(1)(iv) to announce the submission of the ICR to OMB and the opportunity to submit additional comments to OMB. If you have any questions about this ICR or the approval process, please contact the person listed under **FOR FURTHER INFORMATION CONTACT**.

List of Subjects

Environmental protection, Reporting and recordkeeping requirements.

Dated: February 11, 2003.

Susan B. Hazen,

Acting Assistant Administrator for Prevention, Pesticides and Toxic Substances.

[FR Doc. 03–4523 Filed 2–25–03; 8:45 am]

BILLING CODE 6560–50–S

ENVIRONMENTAL PROTECTION AGENCY

[OPP–2003–0005; FRL–7292–4]

Supplemental Distribution of a Registered Pesticide Product; Renewal of Pesticide Information Collection Activities and Request for Comments

AGENCY: Environmental Protection Agency (EPA).

ACTION: Notice.

SUMMARY: In compliance with the Paperwork Reduction Act (PRA) (44 U.S.C. 3501 *et seq.*) this notice announces that EPA is seeking public comment on the following Information Collection Request (ICR): Supplemental Distribution of a Registered Pesticide Product (EPA ICR No. 0278.08, OMB Control No. 2070–0044). This is a request to renew an existing ICR that is currently approved and due to expire October 31, 2003. The ICR describes the nature of the information collection activity and its expected burden and costs. Before submitting this ICR to the Office of Management and Budget (OMB) for review and approval under the PRA, EPA is soliciting comments on specific aspects of the collection.

DATES: Written comments, identified by the docket ID number OPP–2003–0005, must be received on or before April 28, 2003.

ADDRESSES: Comments may be submitted electronically, by mail, or through hand delivery/courier. Follow the detailed instructions as provided in Unit III. of the **SUPPLEMENTARY INFORMATION**.

FOR FURTHER INFORMATION CONTACT: Nancy Vogel, Field and External Affairs Division (7506C), Office of Pesticide Programs, Environmental Protection Agency, 1200 Pennsylvania Ave., NW., Washington, DC 20460–0001; telephone number: (703) 305–6475; fax number: (703) 305–5884; e-mail address: *vogel.nancy@epa.gov.*

SUPPLEMENTARY INFORMATION:

I. Does this Action Apply to Me?

You may be potentially affected by this action if you are a pesticide registrant who has entered into an agreement with a second company to distribute your pesticide product under the second company's name and product name. Potentially affected categories and entities may include, but are not limited to:

- Pesticide and other agricultural chemical manufacturing (NAICS 325320), e.g., Pesticide registrants who enter into agreements with other companies to distribute their pesticide product under the second company's name and product name.

This listing is not intended to be exhaustive, but rather provides a guide for readers regarding entities likely to be affected by this action. Other types of entities not listed above could also be affected. The North American Industrial Classification System (NAICS) codes have been provided to assist you and others in determining whether this action might apply to certain entities. To determine whether you or your business may be affected by this action, you should carefully examine the applicability provisions in the Federal Insecticide, Fungicide, and Rodenticide Act (FIFRA) and the Food Quality Protection Act (FQPA) of 1996. If you have any questions regarding the applicability of this action to a particular entity, consult the person listed under **FOR FURTHER INFORMATION CONTACT**.

II. How Can I Get Copies of This Document and Other Related Information?

A. Docket

EPA has established an official public docket for this action under docket identification (ID) number OPP–2003–0005. The official public docket consists of the documents specifically referenced in this action, any public comments received, and other information related to this action. Although a part of the official docket, the public docket does not include Confidential Business Information (CBI) or other information whose disclosure is restricted by statute. The official public docket is the collection of materials that is available for public viewing at the Public Information and Records Integrity Branch (PIRIB), Rm. 119, Crystal Mall #2, 1921 Jefferson Davis Hwy., Arlington, VA. This docket facility is open from 8:30 a.m. to 4 p.m., Monday through Friday, excluding legal holidays. The docket telephone number is (703) 305–5805.

B. Electronic Access

You may access this **Federal Register** document electronically through the EPA Internet under the "**Federal Register**" listings at *http://www.epa.gov/fedrgstr/.*

An electronic version of the public docket is available through EPA's electronic public docket and comment system, EPA Dockets. You may use EPA Dockets at *http://www.epa.gov/edocket/* to submit or view public comments, access the index listing of the contents of the official public docket, and to access those documents in the public

docket that are available electronically. Once in the system, select ''search,'' then key in the appropriate docket ID number.

Certain types of information will not be placed in the EPA Dockets. Information claimed as CBI and other information whose disclosure is restricted by statute, which is not included in the official public docket, will not be available for public viewing in EPA's electronic public docket. EPA's policy is that copyrighted material will not be placed in EPA's electronic public docket but will be available only in printed, paper form in the official public docket. To the extent feasible, publicly available docket materials will be made available in EPA's electronic public docket. When a document is selected from the index list in EPA Dockets, the system will identify whether the document is available for viewing in EPA's electronic public docket. Although not all docket materials may be available electronically, you may still access any of the publicly available docket materials through the docket facility identified in Unit II.A. EPA intends to work towards providing electronic access to all of the publicly available docket materials through EPA's electronic public docket.

For public commenters, it is important to note that EPA's policy is that public comments, whether submitted electronically or in paper, will be made available for public viewing in EPA's electronic public docket as EPA receives them and without change, unless the comment contains copyrighted material, CBI, or other information whose disclosure is restricted by statute. When EPA identifies a comment containing copyrighted material, EPA will provide a reference to that material in the version of the comment that is placed in EPA's electronic public docket. The entire printed comment, including the copyrighted material, will be available in the public docket.

Public comments submitted on computer disks that are mailed or delivered to the docket will be transferred to EPA's electronic public docket. Public comments that are mailed or delivered to the docket will be scanned and placed in EPA's electronic public docket. Where practical, physical objects will be photographed, and the photograph will be placed in EPA's electronic public docket along with a brief description written by the docket staff.

III. How Can I Respond to this Action?

A. How and To Whom Do I Submit Comments?

You may submit comments electronically, by mail, or through hand delivery/courier. To ensure proper receipt by EPA, identify the appropriate docket ID number in the subject line on the first page of your comment. Please ensure that your comments are submitted within the specified comment period. Comments received after the close of the comment period will be marked ''late.'' EPA is not required to consider these late comments. If you wish to submit CBI or information that is otherwise protected by statute, please follow the instructions in Unit III.B. Do not use EPA Dockets or e-mail to submit CBI or information protected by statute.

1. *Electronically*. If you submit an electronic comment as prescribed in this unit, EPA recommends that you include your name, mailing address, and an e-mail address or other contact information in the body of your comment. Also include this contact information on the outside of any disk or CD ROM you submit, and in any cover letter accompanying the disk or CD ROM. This ensures that you can be identified as the submitter of the comment and allows EPA to contact you in case EPA cannot read your comment due to technical difficulties or needs further information on the substance of your comment. EPA's policy is that EPA will not edit your comment, and any identifying or contact information provided in the body of a comment will be included as part of the comment that is placed in the official public docket, and made available in EPA's electronic public docket. If EPA cannot read your comment due to technical difficulties and cannot contact you for clarification, EPA may not be able to consider your comment.

i. *EPA Dockets*. Your use of EPA's electronic public docket to submit comments to EPA electronically is EPA's preferred method for receiving comments. Go directly to EPA Dockets at *http://www.epa.gov/edocket*, and follow the online instructions for submitting comments. Once in the system, select ''search,'' and then key in docket ID number OPP–2003–0005. The system is an ''anonymous access'' system, which means EPA will not know your identity, e-mail address, or other contact information unless you provide it in the body of your comment.

ii. *E-mail*. Comments may be sent by e-mail to *opp-docket@epa.gov,* Attention: Docket ID Number OPP–2003–0005. In contrast to EPA's electronic public docket, EPA's e-mail system is not an ''anonymous access'' system. If you send an e-mail comment directly to the docket without going through EPA's electronic public docket, EPA's e-mail system automatically captures your e-mail address. E-mail addresses that are automatically captured by EPA's e-mail system are included as part of the comment that is placed in the official public docket, and made available in EPA's electronic public docket.

iii. *Disk or CD ROM*. You may submit comments on a disk or CD ROM that you mail to the mailing address identified in Unit III.A. These electronic submissions will be accepted in WordPerfect or ASCII file format. Avoid the use of special characters and any form of encryption.

2. *By mail*. Send your comments to: Public Information and Records Integrity Branch (PIRIB) (7502C), Office of Pesticide Programs (OPP), Environmental Protection Agency, 1200 Pennsylvania Ave., NW., Washington, DC 20460–0001, Attention: Docket ID Number OPP–2003–0005.

3. *By hand delivery or courier*. Deliver your comments to: Public Information and Records Integrity Branch (PIRIB), Office of Pesticide Programs (OPP), Environmental Protection Agency, Rm. 119, Crystal Mall #2, 1921 Jefferson Davis Hwy., Arlington, VA., Attention: Docket ID Number OPP–2003–0005. Such deliveries are only accepted during the docket's normal hours of operation as identified in Unit II.A.

B. How Should I Submit CBI To the Agency?

Do not submit information that you consider to be CBI electronically through EPA's electronic public docket or by e-mail. You may claim information that you submit to EPA as CBI by marking any part or all of that information as CBI (if you submit CBI on disk or CD ROM, mark the outside of the disk or CD ROM as CBI and then identify electronically within the disk or CD ROM the specific information that is CBI). Information so marked will not be disclosed except in accordance with procedures set forth in 40 CFR part 2.

In addition to one complete version of the comment that includes any information claimed as CBI, a copy of the comment that does not contain the information claimed as CBI must be submitted for inclusion in the public docket and EPA's electronic public docket. If you submit the copy that does not contain CBI on disk or CD ROM, mark the outside of the disk or CD ROM clearly that it does not contain CBI. Information not marked as CBI will be included in the public docket and EPA's

electronic public docket without prior notice. If you have any questions about CBI or the procedures for claiming CBI, please consult the person listed under **FOR FURTHER INFORMATION CONTACT**.

C. What Should I Consider when I Prepare My Comments for EPA?

You may find the following suggestions helpful for preparing your comments:

1. Explain your views as clearly as possible.
2. Describe any assumptions that you used.
3. Provide copies of any technical information and/or data you used that support your views.
4. If you estimate potential burden or costs, explain how you arrived at the estimate that you provide.
5. Provide specific examples to illustrate your concerns.
6. Offer alternative ways to improve the collection activity.
7. Make sure to submit your comments by the deadline in this notice.
8. To ensure proper receipt by EPA, be sure to identify the docket ID number assigned to this action in the subject line on the first page of your response. You may also provide the name, date, and **Federal Register** citation.

D. What Information is EPA Particularly Interested in?

Pursuant to section 3506(c)(2)(A) of the PRA, EPA specifically solicits comments and information to enable it to:

1. Evaluate whether the proposed collections of information are necessary for the proper performance of the functions of the Agency, including whether the information will have practical utility.
2. Evaluate the accuracy of the Agency's estimates of the burdens of the proposed collections of information.
3. Enhance the quality, utility, and clarity of the information to be collected.
4. Minimize the burden of the collections of information on those who are to respond, including through the use of appropriate automated or electronic collection technologies or other forms of information technology, e.g., permitting electronic submission of responses.

IV. What Information Collection Activity or ICR Does this Action Apply to?

EPA is seeking comments on the following ICR:

Title: Supplemental Registration of a Pesticide Product.

ICR numbers: EPA ICR No. 0278.08, OMB Control No. 2070–0044.

ICR status: This ICR is a renewal of an existing ICR that is currently approved by OMB and is due to expire October 31, 2003.

Abstract: This information collection activity provides the Agency with notification of supplemental registration of distributors of pesticide products. Section 3(e) of FIFRA allows pesticide registrants to distribute or sell a registered pesticide product under a different name instead of or in addition to their own. Such distribution and sale is termed ''supplemental distribution'' and the product is termed a ''distributor product.'' EPA requires the pesticide registrant to submit a supplemental statement (EPA Form 8570–5) when the registrant has entered into an agreement with a second company that will distribute the registrant's product under the second company's name and product name. Since the last approval, EPA has not changed the substance or the method of collection for this activity.

V. What are EPA's Burden and Cost Estimates for this ICR?

Under the PRA, ''burden'' means the total time, effort, or financial resources expended by persons to generate, maintain, retain, or disclose or provide information to or for a Federal Agency. For this collection it includes the time needed to review instructions; develop, acquire, install, and utilize technology and systems for the purposes of collecting, validating, and verifying information, processing and maintaining information, and disclosing and providing information; adjust the existing ways to comply with any previously applicable instructions and requirements; train personnel to be able to respond to a collection of information; search data sources; complete and review the collection of information; and transmit or otherwise disclose the information.

The ICR provides a detailed explanation of this estimate, which is only briefly summarized in this notice. The annual public burden is estimated to be 1,250 hours. The following is a summary of the estimates taken from the ICR:

Respondents/affected entities: Pesticide registrants.

Estimated total number of potential respondents: 5,000 .

Frequency of response: As needed per event.

Estimated total/average number of responses for each respondent: 1.

Estimated total annual burden hours: 1,250.

Estimated total annual burden costs: $120,000.

VI. Are There Changes in the Estimates from the Last Approval?

There are no changes in the estimated respondent burden hours from the last renewal. The annual respondent cost estimate rose from $118,500 to $120,000 as a result of the estimated increase in hourly rates.

VII. What is the Next Step in the Process for this ICR?

EPA will consider the comments received and amend the ICR as appropriate. The final ICR package will then be submitted to OMB for review and approval pursuant to 5 CFR 1320.12. EPA will issue another **Federal Register** notice pursuant to 5 CFR 1320.5(a)(1)(iv) to announce the submission of the ICR to OMB and the opportunity to submit additional comments to OMB. If you have any questions about this ICR or the approval process, please contact the person listed under **FOR FURTHER INFORMATION CONTACT**.

List of Subjects

Environmental protection, Reporting and recordkeeping requirements.

Dated: February 11, 2003.

Susan B. Hazen,

Acting Assistant Administrator for Prevention, Pesticides and Toxic Substances.

[FR Doc. 03–4524 Filed 2–25–03; 8:45 am]

BILLING CODE 6560–50–S

ENVIRONMENTAL PROTECTION AGENCY

[OPPTS–2002–0057; FRL–7293–2]

Access to Confidential Business Information by the U.S. Consumer Product Safety Commission

AGENCY: Environmental Protection Agency (EPA).

ACTION: Notice.

SUMMARY: EPA has authorized the U.S. Consumer Product Safety Commission (CPSC) access to information which has been submitted to EPA under all sections of the Toxic Substances Control Act (TSCA). Some of the information may be claimed or determined to be confidential business information (CBI).

DATES: Access to the confidential data submitted to EPA under all sections of TSCA occurred as a result of an on-going Memorandum of Understanding between CPSC and the U.S. EPA dated September 23, 1986, which granted

CPSC immediate access to all sections of TSCA CBI.

FOR FURTHER INFORMATION CONTACT: Barbara A. Cunningham, Acting Director, Environmental Assistance Division (7408M), Office of Pollution Prevention and Toxics, Environmental Protection Agency, 1200 Pennsylvania Ave., NW., Washington, DC 20460; telephone number: (202) 564–8940; e-mail address: *TSCA-Hotline@epa.gov.*

SUPPLEMENTARY INFORMATION:

I. General Information

A. Does this Notice Apply to Me?

This action is directed to the public in general. This action may, however, be of interest to ''those persons who are or may be required to conduct testing of chemical substances under TSCA.'' Since other entities may also be interested, the Agency has not attempted to describe all the specific entities that may be affected by this action. If you have any questions regarding the applicability of this action to a particular entity, consult the person listed under **FOR FURTHER INFORMATION CONTACT.**

B. How Can I Get Copies of this Document or Other Related Information?

1. *Docket.* EPA has established an official docket for this action under docket identification (ID) number OPPT–2002–0057. The official public docket consists of the documents specifically referenced in this action, any public comments received, and other information related to this action. Although a part of the official docket, the public docket does not include CBI or other information whose disclosure is restricted by statute. The official public docket is the collection of materials that is available for public viewing at the EPA Docket Center, Rm. B102-Reading Room, EPA West, 1301 Constitution Ave., NW., Washington, DC. The EPA Docket Center is open from 8:30 a.m. to 4:30 p.m., Monday thrugh Friday, excluding legal holidays. The EPA Docket Center Reading Room telephone number is (202) 566–1744 and the telephone number for the OPPT Docket, which is located in EPA Docket Center, is (202) 566–0280.

2. *Electronic access.* You may access this **Federal Register** document electronically through the EPA Internet under the **''Federal Register''** listings at *http://www.epa.gov/fedrgstr/.*

An electronic version of the public docket is available through EPA's electronic public docket and comment system, EPA Dockets. You may use EPA Dockets at *http://ww.epa.gov/edocket/* to submit or view public comments, access the index listing of the contents of the official public docket, and to access those documents in the public docket that are available electronically. Although not all docket materials may be available electronically, you may still access any of the publicly available docket materials through the docket facility identified in Unit I.B.1. Once in the system, select ''search,'' then key in the appropriate docket ID number.

II. What Action is the Agency Taking?

Under a Memorandum of Understanding (MOU) dated September 23, 1986, the CPSC agreed to EPA procedures governing access to CBI submitted to EPA under TSCA.

In accordance with 40 CFR 2.306(h), EPA has determined that CPSC requires access to CBI submitted to EPA under all sections of TSCA, to perform successfully their responsibilities under the Consumer Product Safety Act and TSCA.

CPSC's personnel are given access to information submitted to EPA under all sections of TSCA. Some of the information is claimed or determined to be CBI. Under the terms of the MOU, CPSC is not required to renew its access to TSCA CBI. EPA publishes this notice to the public from time to time to reiterate and confirm that access to TSCA CBI has been granted to this other federal agency. In a previous notice published in the **Federal Register** of December 9, 1997 (62 FR 64829) (FRL–5757–8), EPA confirmed that CPSC continues to have access to CBI under all sections of TSCA. EPA is issuing this notice to once again confirm that CPSC maintains access under the existing MOU.

EPA issues this notice to inform all submitters of information under all sections of TSCA, that the Agency provides the CPSC access to these CBI materials on a need-to-know basis only. All access to TSCA CBI under this MOU will take place at EPA Headquarters and CPSC's 4330 East West Highway, Bethesda, Maryland site.

CPSC is required to adhere to all provisions of EPA's *TSCA Confidential Business Information Security Manual.*

CPSC personnel are required to sign nondisclosure agreements and are briefed on appropriate security procedures before they are permitted access to TSCA CBI.

List of Subjects

Environmental protection, Confidential business information.

Dated: February 10, 2003.

Allan S. Abramson,

Director, Information Management Division, Office of Pollution Prevention and Toxics.

[FR Doc. 03–4249 Filed 2–25–03; 8:45 am]

BILLING CODE 6560–50–M

ENVIRONMENTAL PROTECTION AGENCY

[OPPT–2002–0049; FRL–7293–1]

Access to Confidential Business Information by Geologics Corporation

AGENCY: Environmental Protection Agency (EPA).

ACTION: Notice.

SUMMARY: EPA has authorized Geologics Corporation, of Alexandria, VA, access to information which has been submitted to EPA under sections 4, 5, 6, and 8 of the Toxic Substances Control Act (TSCA). Some of the information may be claimed or determined to be Confidential Business Information (CBI).

DATES: Access to the confidential data submitted to EPA under sections 4, 5, 6, and 8 of TSCA occurred as a result of an approved waiver dated July 31, 2002.

FOR FURTHER INFORMATION CONTACT: Barbara A. Cunningham, Acting Director, Environmental Assistance Division (7408M), Office of Pollution Prevention and Toxics, Environmental Protection Agency, 1200 Pennsylvania Ave., NW., Washington, DC 20460; telephone number: (202) 554–1404; e-mail address: *TSCA-Hotline@.epa.gov.*

SUPPLEMENTARY INFORMATION:

I. General Information

A. Does this Notice Apply to Me?

This action is directed to the public in general. This action may, however, be of interest to those persons who are or may be required to conduct testing of chemical substances under TSCA. Since other entities may also be interested, the Agency has not attempted to describe all the specific entities that may be affected by this action. If you have any questions regarding the applicability of this action to a particular entity, consult the person listed under **FOR FURTHER INFORMATION CONTACT.**

B. How Can I Get Copies of this Document and Other Related Documents?

1. *Docket.* EPA has established an official public docket for this action under docket identification (ID) number OPPT–2002–0049. The official public docket consists of the documents specifically referenced in this action,

any public comments received, and other information related to this action. Although a part of the official docket, the public docket does not include CBI or other information whose disclosure is restricted by statute. The official public docket is the collection of materials that is available for public viewing at the EPA Docket Center, Rm. B102-Reading Room, EPA West, 1301 Constitution Ave., NW., Washington, DC. The EPA Docket Center is open from 8:30 a.m. to 4:30 p.m., Monday through Friday, excluding legal holidays. The EPA Docket Center Reading Room telephone number is (202) 566–1744 and the telephone number for the OPPT Docket, which is located in EPA Docket Center, is (202) 566–0280.

2. *Electronic access.* You may access this **Federal Register** document electronically through the EPA Internet under the ''**Federal Register**'' listings at *http://www.epa.gov/fedrgstr/*.

An electronic version of the public docket is available through EPA's electronic public docket and comment system, EPA Dockets. You may use EPA Dockets at *http://www.epa.gov/edocket/* to submit or view public comments, access the index listing of the contents of the official public docket, and to access those documents in the public docket that are available electronically. Although not all docket materials may be available electronically, you may still access any of the publicly available docket materials through the docket facility identified in Unit I.B.1. Once in the system, select ''search,'' then key in the appropriate docket ID number.

II. What Action is the Agency Taking?

Under Contract Number GS–00K97AFD2140, Delivery Order Number 2W–0947–YBSW, Geologics Corporation, of 5285 Shawnee Road, Suite 210, Alexandria, VA, will assist the Office of Pollution Prevention and Toxics (OPPT) in providing technical and administrative support for meetings related to investigation of chemicals and biotechnology products for possible regulatory or other control actions. They will also provide computer data base support related to providing information on chemical regulatory actions and related policy decisions.

In accordance with 40 CFR 2.306(j), EPA has determined that under Contract Number GS–00K97AFD2140, Delivery Order Number 2W–0947–YBSW, Geologics Coporation will require access to CBI submitted to EPA under sections 4, 5, 6, and 8 of TSCA, to perform successfully the duties specified under the contract.

Geologics personnel was given access to information submitted to EPA under sections 4, 5, 6, and 8 of TSCA. Some of the information may be claimed or determined to be CBI.

Geologics was granted a waiver July 31, 2002. This waiver was necessary to allow Geologics to assist the Office of Pollution Prevention and Toxics (OPPT) in the activities listed above.

EPA is issuing this notice to inform all submitters of information under sections 4, 5, 6, and 8 of TSCA, that the Agency may provide Geologics access to these CBI materials on a need-to-know basis only. All access to TSCA CBI under this contract will take place at EPA Headquarters.

Geologics will be required to adhere to all provisions of EPA's *TSCA Confidential Business Information Security Manual*.

Clearance for access to TSCA CBI under this contract may continue until July 31, 2004.

Geologics personnel will be required to sign nondisclosure agreements and will be briefed on appropriate security procedures before they are permitted access to TSCA CBI.

List of Subjects

Environmental protection, Confidential business information.

Dated: February 10, 2003.

Allan S. Abramson,

Director, Information Management Division, Office of Pollution Prevention and Toxics.

[FR Doc. 03–4250 Filed 2–25–03; 8:45 am]

BILLING CODE 6560–50–S

ENVIRONMENTAL PROTECTION AGENCY

[OPPT–2003–0004; FRL–7293–3]

Access to Confidential Business Information by Dyncorp Systems and Solutions, LLC

AGENCY: Environmental Protection Agency (EPA).

ACTION: Notice.

SUMMARY: EPA has authorized its prime contractor Dyncorp Systems and Solutions, LLC (Dyncorp) of Chantilly, VA and 10 of its subcontractors access to information which has been submitted to EPA under all sections of the Toxic Substances Control Act (TSCA). Some of the information may be claimed or determined to be Confidential Business Information (CBI).

DATES: Access to the confidential data submitted to EPA under all sections of TSCA occurred as a result of an approved waiver dated January 13, 2003, which requested granting Dyncorp and its subcontractors immediate access to all sections of TSCA CBI.

FOR FURTHER INFORMATION CONTACT: Barbara A. Cunningham, Acting Director, Environmental Assistance Division (7408M), Office of Pollution Prevention and Toxics, Environmental Protection Agency, 1200 Pennsylvania Ave., NW., Washington, DC 20460–0001; telephone number: (202) 554–1404; e-mail address: *TSCA-Hotline@epa.gov*.

SUPPLEMENTARY INFORMATION:

I. General Information

A. Does this Notice Apply to Me?

This action is directed to the public in general. This action may, however, be of interest to those persons who are or may be required to conduct testing of chemical substances under TSCA. Since other entities may also be interested, the Agency has not attempted to describe all the specific entities that may be affected by this action. If you have any questions regarding the applicability of this action to a particular entity, consult the person listed under **FOR FURTHER INFORMATION CONTACT**.

B. How Can I Get Copies of this Document and Other Related Information?

1. *Docket.* EPA has established an official public docket for this action under docket identification (ID) number OPPT–2003–0004. The official public docket consists of the documents specifically referenced in this action, any public comments received, and other information related to this action. Although a part of the official docket, the public docket does not include CBI or other information whose disclosure is restricted by statute. The official public docket is the collection of materials that is available for public viewing at the EPA Docket Center, Rm. B102–Reading Room, EPA West, 1301 Constitution Ave., NW., Washington, DC. The EPA Docket Center is open from 8:30 a.m. to 4:30 p.m., Monday through Friday, excluding legal holidays. The EPA Docket Center Reading Room telephone number is (202) 566–1744 and the telephone number for the OPPT Docket, which is located in EPA Docket Center, is (202) 566–0280.

2. *Electronic access.* You may access this **Federal Register** document electronically through the EPA Internet under the ''**Federal Register**'' listings at *http://www.epa.gov/fedrgstr/*.

An electronic version of the public docket is available through EPA's electronic public docket and comment system, EPA Dockets. You may use EPA Dockets at *http://www.epa.gov/edocket/* to submit or view public comments, access the index listing of the contents

of the official public docket, and to access those documents in the public docket that are available electronically. Although not all docket materials may be available electronically, you may still access any of the publicly available docket materials through the docket facility identified in Unit I.B.1. Once in the system, select ''search,'' then key in the appropriate docket ID number.

II. What Action is the Agency Taking?

Under GSA Contract Number GS00T99ALD0204, Task Order Number T0002AJMZ39, contractor Dyncorp, of 15000 Conference Center Drive, Chantilly, VA and its subcontractors Excel Management Systems, of 691 N. High Street, 2nd Floor, Columbus, OH; IBM, 700 Park Dr., Building 662, Research Triangle Park, NC; Institute for Disabilities Research and Training of 11323 Amherst Avenue, Silver Spring, MD; Kenrob, Inc. of 44084 Riverside Parkway, Suite 125, Leesburg, VA; Madision Research of 401 Wynn Drive, Huntsville, AL; OAO, 2222 East NC Highway 54, Beta Building, Suite 220, Durham, NC; Paloma Systems of 7002 Evergreen Court, Annandale, VA; PlanetGov of 14155 Newbrook Drive, Chantilly, VA; Superlative Technologies, Inc. of 8300 Greensboro Drive, Suite 425, McLean, VA; and Veridian of 1200 South Hayes Street, Suite 1000, Arlington, VA, will assist the Office of Pollution Prevention and Toxics (OPPTS) in computer operations and maintenance of TSCA CBI Computer Systems and Communications Network, linking CBI sites, located in Washington, DC. Dyncorp and its subcontractors will also assist in maintaining and operating the EPA CBI computer facilities located in Research Triangle Park, NC.

In accordance with 40 CFR 2.306(j), EPA has determined that under GSA Contract Number GS00T99ALD0204, Task Order Number T0002AJMZ39, Dyncorp and its subcontractors will require access to CBI submitted to EPA under all sections of TSCA to perform successfully the duties specified under the contract.

Dyncorp and its subcontractor personnel were given access to information submitted to EPA under all sections of TSCA. Some of the information may be claimed or determined to be CBI.

Dyncorp was granted a waiver on January 13, 2003. This waiver was necessary to allow Dyncorp and its subcontractors to assist EPA in the activities listed above.

EPA is issuing this notice to inform all submitters of information under all sections of TSCA that EPA may provide Dyncorp and its subcontractors access to these CBI materials on a need-to-know basis only. All access to TSCA CBI under this contract will take place at EPA Headquarters and at Research Triangle Park, NC facilities. No access will occur at the Research Triangle Park, NC facility until after it has been approved for the storage of TSCA CBI.

Dyncorp and its subcontractors will be authorized access to TSCA CBI at EPA Headquarters and Research Triangle Park, NC, in accordance with EPA *TSCA Confidential Business Information Security Manual*.

Clearance for access to TSCA CBI under this contract may continue until September 30, 2007.

Dyncorp and its subcontractor personnel will be required to sign nondisclosure agreements and will be briefed on appropriate security procedures before they are permitted access to TSCA CBI.

List of Subjects

Environmental protection, Confidential business information.

Dated: February 10, 2003.

Allan S. Abramson,

Director, Information Management Division, Office of Pollution Prevention and Toxics.

[FR Doc. 03–4251 Filed 2–25–03; 8:45 am]

BILLING CODE 6560–50–S

ENVIRONMENTAL PROTECTION AGENCY

[FRL–7455–6]

Meeting of the Ozone Transport Commission for the Northeast United States

AGENCY: Environmental Protection Agency.

ACTION: Notice of meeting.

SUMMARY: The United States Environmental Protection Agency is announcing the 2003 Annual Meeting of the Ozone Transport Commission (OTC). This meeting is for the OTC to deal with appropriate matters within the Ozone Transport Region in the Northeast and Mid-Atlantic States, as provided for under the Clean Air Act Amendments of 1990. This meeting is not subject to the provisions of the Federal Advisory Committee Act, Public Law 92–463, as amended.

DATES: The meeting will be held on March 4, 2003 starting at 10 a.m. (EST).

ADDRESSES: The Marriott Hotel at Metro Center, 775 Twelfth (12th) Street NW., Washington, DC.

FOR FURTHER INFORMATION CONTACT: Judith M. Katz, U.S. Environmental Protection Agency, Region III, 1650 Arch Street, Philadelphia, PA 19103; (215) 814–2100.

For Documents and Press Inquiries Contact: Ozone Transport Commission, 444 North Capitol Street NW., Suite 638, Washington, DC 20001; (202) 508–3840; e-mail: *ozone@sso.org*; Web site: *http://www.sso.org/otc.*

SUPPLEMENTARY INFORMATION: The Clean Air Act Amendments of 1990 contain at Section 184 provisions for the ''Control of Interstate Ozone Air Pollution.'' Section 184(a) establishes an ''Ozone Transport Region'' (OTR) comprised of the States of Connecticut, Delaware, Maine, Maryland, Massachusetts, New Hampshire, New Jersey, New York, Pennsylvania, Rhode Island, Vermont, parts of Virginia and the District of Columbia. The Assistant Administrator for Air and Radiation of the Environmental Protection Agency convened the first meeting of the commission in New York City on May 7, 1991. The purpose of the Ozone Transport Commission is to deal with ground level ozone formation, transport, and control within the OTR.

The purpose of this notice is to announce that this Commission will meet on March 4, 2003. The meeting will be held at the address noted earlier in this notice.

Section 176A(b)(2) of the Clean Air Act Amendments of 1990 specifies that the meetings of the Ozone Transport Commission are not subject to the provisions of the Federal Advisory Committee Act. This meeting will be open to the public as space permits.

Type of Meeting: Open.

AGENDA: Copies of the final agenda will be available from the OTC office (202) 508–3840 (by e-mail: *ozone@sso.org* or via our Web site at *http://www.sso.org/otc*) by close of business, Tuesday, February 25, 2003. The purpose of this meeting is to discuss ways in which OTC states can meet their statutory and regulatory responsibilities under the Clean Air Act. Special emphasis will be given to stationary and mobile source control measures to reduce precursors of ground-level ozone and next steps to reduce ground-level ozone in the context of a multi-pollutant emission reduction program. The OTC is also expected to address issues related to the transport of ozone into its region, and to discuss potential regional emission control measures.

Dated: Feburary 14, 2003.

Donald S. Welsh,

Regional Administrator, EPA Region III.

[FR Doc. 03–4519 Filed 2–25–03; 8:45 am]

BILLING CODE 6560–50–P

ENVIRONMENTAL PROTECTION AGENCY

[OPP–2003–0035; FRL–7293–9]

Butafenacil; Notice of Filing a Pesticide Petition to Establish a Tolerance for a Certain Pesticide Chemical in or on Food

AGENCY: Environmental Protection Agency (EPA).

ACTION: Notice.

SUMMARY: This notice announces the initial filing of a pesticide petition proposing the establishment of regulations for residues of a certain pesticide chemical in or on various food commodities.

DATES: Comments, identified by docket ID number OPP–2003–0035, must be received on or before March 28, 2003.

ADDRESSES: Comments may be submitted electronically, by mail, or through hand delivery/courier. Follow the detailed instructions as provided in Unit I. of the **SUPPLEMENTARY INFORMATION**.

FOR FURTHER INFORMATION CONTACT: Jim Tompkins, Registration Division (7505C), Office of Pesticide Programs, Environmental Protection Agency, 1200 Pennsylvania Ave., NW., Washington, DC 20460–0001; telephone number: (703) 305–5697; e-mail address: *tompkins.jim@epa.gov.*

SUPPLEMENTARY INFORMATION:

I. General Information

A. Does this Action Apply to Me?

You may be affected by this action if you are an agricultural producer, food manufacturer, or pesticide manufacturer. Potentially affected categories and entities may include, but are not limited to:

- Crop production (NAICS 111)
- Animal production (NAICS 112)
- Food manufacturing (NAICS 311)
- Pesticide manufacturing (NAICS 32532)

This listing is not intended to be exhaustive, but rather provides a guide for readers regarding entities likely to be affected by this action. Other types of entities not listed in this unit could also be affected. The North American Industrial Classification System (NAICS) codes have been provided to assist you and others in determining whether this action might apply to certain entities. If you have any questions regarding the applicability of this action to a particular entity, consult the person listed under **FOR FURTHER INFORMATION CONTACT**.

B. How Can I Get Copies of this Document and Other Related Information?

1. *Docket*. EPA has established an official public docket for this action under docket ID number OPP–2003–0035. The official public docket consists of the documents specifically referenced in this action, any public comments received, and other information related to this action. Although, a part of the official docket, the public docket does not include Confidential Business Information (CBI) or other information whose disclosure is restricted by statute. The official public docket is the collection of materials that is available for public viewing at the Public Information and Records Integrity Branch (PIRIB), Rm. 119, Crystal Mall #2, 1921 Jefferson Davis Hwy., Arlington, VA. This docket facility is open from 8:30 a.m. to 4 p.m., Monday through Friday, excluding legal holidays. The docket telephone number is (703) 305–5805.

2. *Electronic access*. You may access this **Federal Register** document electronically through the EPA Internet under the ''**Federal Register**'' listings at *http://www.epa.gov/fedrgstr/.*

An electronic version of the public docket is available through EPA's electronic public docket and comment system, EPA dockets. You may use EPA dockets at *http://www.epa.gov/edocket/* to submit or view public comments, access the index listing of the contents of the official public docket, and to access those documents in the public docket that are available electronically. Although, not all docket materials may be available electronically, you may still access any of the publicly available docket materials through the docket facility identified in Unit I.B.1. Once in the system, select ''search,'' then key in the appropriate docket ID number.

Certain types of information will not be placed in the EPA dockets. Information claimed as CBI and other information whose disclosure is restricted by statute, which is not included in the official public docket, will not be available for public viewing in EPA's electronic public docket. EPA's policy is that copyrighted material will not be placed in EPA's electronic public docket, but will be available only in printed, paper form in the official public docket. To the extent feasible, publicly available docket materials will be made available in EPA's electronic public docket. When a document is selected from the index list in EPA dockets, the system will identify whether the document is available for viewing in EPA's electronic public docket. Although, not all docket materials may be available electronically, you may still access any of the publicly available docket materials through the docket facility identified in Unit I.B. EPA intends to work towards providing electronic access to all of the publicly available docket materials through EPA's electronic public docket.

For public commenters, it is important to note that EPA's policy is that public comments, whether submitted electronically or on paper, will be made available for public viewing in EPA's electronic public docket as EPA receives them and without change, unless the comment contains copyrighted material, CBI, or other information whose disclosure is restricted by statute. When EPA identifies a comment containing copyrighted material, EPA will provide a reference to that material in the version of the comment that is placed in EPA's electronic public docket. The entire printed comment, including the copyrighted material, will be available in the public docket.

Public comments submitted on computer disks that are mailed, or delivered to the docket will be transferred to EPA's electronic public docket. Public comments that are mailed or delivered to the docket will be scanned and placed in EPA's electronic public docket. Where practical, physical objects will be photographed, and the photograph will be placed in EPA's electronic public docket along with a brief description written by the docket staff.

C. How and to Whom Do I Submit Comments?

You may submit comments electronically, by mail, or through hand delivery/courier. To ensure proper receipt by EPA, identify the appropriate docket ID number in the subject line on the first page of your comment. Please ensure that your comments are submitted within the specified comment period. Comments received after the close of the comment period will be marked ''late.'' EPA is not required to consider these late comments. If you wish to submit CBI or information that is otherwise protected by statute, please follow the instructions in Unit I.D. Do not use EPA dockets or e-mail to submit CBI or information protected by statute.

1. *Electronically*. If you submit an electronic comment as prescribed in this unit, EPA recommends that you include your name, mailing address, and an e-mail address or other contact information in the body of your comment. Also include this contact information on the outside of any disk

or CD ROM you submit, and in any cover letter accompanying the disk or CD ROM. This ensures that you can be identified as the submitter of the comment and allows EPA to contact you in case EPA cannot read your comment due to technical difficulties, or needs further information on the substance of your comment. EPA's policy is that EPA will not edit your comment, and any identifying, or contact information provided in the body of a comment will be included as part of the comment that is placed in the official public docket, and made available in EPA's electronic public docket. If EPA cannot read your comment due to technical difficulties and cannot contact you for clarification, EPA may not be able to consider your comment.

i. *EPA Dockets*. Your use of EPA's electronic public docket to submit comments to EPA electronically is EPA's preferred method for receiving comments. Go directly to EPA dockets at http://www.epa.gov/edocket, and follow the online instructions for submitting comments. Once in the system, select ''search,'' and then key in docket ID number OPP–2002–0035. The system is an''anonymous access'' system, which means EPA will not know your identity, e-mail address, or other contact information unless you provide it in the body of your comment.

ii. *E-mail*. Comments may be sent by e-mail to *opp-docket@epa.gov,* Attention: Docket ID number OPP–2003–0035. In contrast to EPA's electronic public docket, EPA's e-mail system is not an ''anonymous access'' system. If you send an e-mail comment directly to the docket without going through EPA's electronic public docket, EPA's e-mail system automatically captures your e-mail address. E-mail addresses that are automatically captured by EPA's e-mail system are included as part of the comment that is placed in the official public docket, and made available in EPA's electronic public docket.

iii. *Disk or CD ROM*. You may submit comments on a disk or CD ROM that you mail to the mailing address identified in Unit I.C.2. These electronic submissions will be accepted in WordPerfect or ASCII file format. Avoid the use of special characters and any form of encryption.

2. *By mail*. Send your comments to: Public Information and Records Integrity Branch (PIRIB) (7502C), Office of Pesticide Programs (OPP), Environmental Protection Agency, 1200 Pennsylvania Ave., NW., Washington, DC 20460–0001, Attention: Docket ID number OPP–2003–0035.

3. *By hand delivery or courier*. Deliver your comments to: Public Information and Records Integrity Branch (PIRIB), Office of Pesticide Programs (OPP), Environmental Protection Agency, Rm. 119, Crystal Mall #2, 1921 Jefferson Davis Hwy., Arlington, VA, Attention: Docket ID number OPP–2003–0035. Such deliveries are only accepted during the docket's normal hours of operation as identified in Unit I.B.1.

D. How Should I Submit CBI to the Agency?

Do not submit information that you consider to be CBI electronically through EPA's electronic public docket or by e-mail. You may claim information that you submit to EPA as CBI by marking any part or all of that information as CBI (if you submit CBI on disk or CD ROM, mark the outside of the disk or CD ROM as CBI and then identify electronically within the disk or CD ROM the specific information that is CBI). Information so marked will not be disclosed except in accordance with procedures set forth in 40 CFR part 2.

In addition to one complete version of the comment that includes any information claimed as CBI, a copy of the comment that does not contain the information claimed as CBI must be submitted for inclusion in the public docket and EPA's electronic public docket. If you submit the copy that does not contain CBI on disk or CD ROM, mark the outside of the disk or CD ROM clearly that it does not contain CBI. Information not marked as CBI will be included in the public docket and EPA's electronic public docket without prior notice. If you have any questions about CBI or the procedures for claiming CBI, please consult the person listed under **FOR FURTHER INFORMATION CONTACT**.

E. What Should I Consider as I Prepare My Comments for EPA?

You may find the following suggestions helpful for preparing your comments:

1. Explain your views as clearly as possible.
2. Describe any assumptions that you used.
3. Provide copies of any technical information and/or data you used that support your views.
4. If you estimate potential burden or costs, explain how you arrived at the estimate that you provide.
5. Provide specific examples to illustrate your concerns.
6. Make sure to submit your comments by the deadline in this notice.
7. To ensure proper receipt by EPA, be sure to identify the docket ID number assigned to this action in the subject line on the first page of your response. You may also provide the name, date, and **Federal Register** citation.

II. What Action is the Agency Taking?

EPA has received a pesticide petition as follows proposing the establishment and/or amendment of regulations for residues of a certain pesticide chemical in or on various food commodities under section 408 of the Federal Food, Drug, and Cosmetic Act (FFDCA), 21 U.S.C. 346a. EPA has determined that this petition contains data or information regarding the elements set forth in FFDCA section 408(d)(2); however, EPA has not fully evaluated the sufficiency of the submitted data at this time or whether the data support granting of the petition. Additional data may be needed before EPA rules on the petition.

List of Subjects

Environmental protection, Agricultural commodities, Feed additives, Food additives, Pesticides and pests, Reporting and recordkeeping requirements.

Dated: February 12, 2003.

Debra Edwards,

Acting Director, Registration Division, Office of Pesticide Programs.

Summary of Petition

The petitioner summary of the pesticide petition is printed below as required by FFDCA section 408(d)(3). The summary of the petition was prepared by Syngenta Crop and represents the view of the petitioner. The petition summary announces the availability of a description of the analytical methods available to EPA for the detection and measurement of the pesticide chemical residues, or an explanation of why no such method is needed.

Syngenta Crop Protection, Inc.

PP 1F6309

EPA has received a pesticide petition (PP 1F6309) from Syngenta Crop Protection, Inc., Greensboro, NC 27419 proposing, pursuant to section 408(d) of the FFDCA, 21 U.S.C. 346a(d), to amend 40 CFR part 180, by establishing a tolerance for residues of butafenacil in or on the raw agricultural commodity cotton, undelinted seed at 0.5 parts per million (ppm) and cotton, gin byproducts at 13 ppm. EPA has determined that the petition contains data or information regarding the elements set forth in section 408(d)(2) of the FFDCA; however, EPA has not fully evaluated the sufficiency of the

submitted data at this time or whether the data support granting of the petition. Additional data may be needed before EPA rules on the petition.

A. Residue Chemistry

1. *Plant metabolism*. The metabolic pathway of butafenacil in cotton after defoliation applications is understood. The data support the selection of the residue of concern for tolerance setting.

2. *Analytical method*. Syngenta Crop Protection, Inc. has submitted practical analytical methodology for detecting and measuring levels of butafenacil in or on raw agricultural commodities. This method is based on crop-specific cleanup procedures and determination by liquid chromatography with a liquid chromatography/mass spectroscopy (LC/MS) detector. The limit of quantitation is 0.01 ppm for butafenacil for all crops tested, including cotton. The limit of quantitation for metabolites is also 0.01 ppm except for cotton gin trash where the limit of quantitation is 0.05 ppm. The analytical method was validated by determination of recoveries for fortified samples.

3. *Magnitude of residues*. A residue program was performed with butafenacil on the full geography required to support use on cotton.

B. Toxicological Profile

1. *Acute toxicity*. Butafenacil technical and the 100 EC formulation (0.83 lb active ingredient/gallon (ai/gal) have very low order of acute toxicity by oral, dermal, and inhalation exposure routes. Butafenacil technical is mildly irritating to the eye and non-irritating to the skin. The 100 EC formulation is moderately irritating to the eye and skin. Neither the technical nor the formulation are skin sensitizers. The rat dermal LD_{50} is >5,000 milligram/kilogram (mg/kg). The rat dermal LD_{50} is >4,000 mg/kg and the rat inhalation LD_{50} is >5.1 milligrams per liter (mg/L) air. The end-use formulation of butafenacil has a similar low acute toxicity profile.

2. *Genotoxicity*. Butafenacil has been tested for its potential to induce gene mutation and chromosomal changes in five different test systems. Butafenacil technical did not induce point mutations in bacteria (ames assay in *salmonella typhimurium* or *escherichia coli*), and was not genotoxic in an *in vitro* unscheduled DNA synthesis assay in rat hepatocytes. Chromosome aberrations were not observed in an *in vitro* test using Chinese hamster ovary cells and there were no clastogenic or aneugenic effects on mouse bone marrow cell *in vivo* in a mouse micronucleus test. There was a borderline positive response in the gene mutation test in V79 cells *in vitro* at the highest concentration in the presence of metabolic activation, which proved to be cytotoxic. This effect was considered to be an isolated finding and not to be of relevance when assessing the overall mutagenic potential of butafenacil. To substantiate this finding, a corresponding *in vivo in-vitro* DNA repair study on rat hepatocytes was performed. The results of this test show no mutagenic potential of butafenacil. Consequently, it can be concluded that butafenacil is not genotoxic.

3. *Reproductive and developmental toxicity*. In rat and rabbit teratology studies there was no evidence of teratogenicity. Delayed fetal development was apparent only at maternally toxic doses of butafenacil technical in rabbits. In the rabbit study (with doses of 0, 10, 100, 1,000 mg/kg), 1,000 mg/kg/day caused a mean body weight loss from days 12 to 16, decreased food consumption during the dosing period and an increase in the incidence of post-implantation loss, almost exclusively in the form of early resorptions. This increase in post-implantation loss, which was restricted to the top dose, was considered to be secondary to the maternal toxicity occurring at this dose level, and not a direct effect by butafenacil. Slightly reduced fetal body weights at 1,000 mg/kg/day were considered secondary to maternal effects. The incidence and type of external, visceral and skeletal findings were not affected by treatment. There was no indication of developmental toxicity in rabbit offspring at 100 mg/kg/day. The no observed adverse effect level (NOAEL) for both maternal and developmental toxicity was established at 100 mg/kg/day in rabbits.

In the rat teratogenicity study 0, 10, 100, 1,000 mg/kg, there was no observation of maternal toxicity. Body weight and food consumption were comparable in all groups. Reproduction and fetal parameters were not impaired. The incidence and type of external, visceral and skeletal findings were comparable in all dose groups. No treatment-related findings were noted. In conclusion, butafenacil was not teratogenic and not toxic to the progeny. Maternal parameters were not affected. The NOAEL for both maternal and developmental toxicity was >1,000 mg/kg/day, the highest dose level tested.

In a rat multi-generation study, butafenacil technical was administered in feed at concentrations of 0, 30, 300, or 1,000 ppm. The dose in mg/kg/day spans a wide range over the duration of the study as animals gain weight and go through gestation and lactation. The ranges are 1.5–3.3, 15.5–31.9, and 50.9–101.6 for males and 1.7–6.3, 16.8–65.4, and 49.8–215.8 mg/kg/day for females at the 30, 300, or 1,000 ppm dietary levels, respectively. Butafenacil had no effect on reproductive parameters for either the F0 or F1 generation of parent animals. Parental body weight gain and food consumption were reduced at 300 and 1,000 ppm in both the F0 and F1 males and in F1 females. Increased incidence of liver pathology was observed in males and females in the F0 and F1 generations, including bile duct hyperplasia in both sexes at 300 and 1,000 ppm, hepatocellular hypertrophy in males at 1,000 ppm, and foci of necrosis in both sexes at 1,000 ppm and males at 300 ppm. Body weight gain was reduced during the lactation period at 300 and 1,000 ppm in offspring of the F0 generation and at 1,000 ppm in offspring of the F1 generation.

In conclusion, the NOAEL for systemic toxicity in both sexes and both generations of rats was 30 ppm (range = 1.5–3.3 mg/kg/day in males and 1.7–6.3 mg/kg/day in females). The grand mean test item intake (mean of all weekly means for both sexes, both generations, all time points) at this dose level was 2.48 mg/kg/day. There were no effects on the reproductive parameters and the NOAEL for reproductive toxicity was >1,000 ppm. Offspring effects were observed only at dose levels that also produced parental toxicity. There is no evidence that developing offspring are more sensitive than adults to the effects of butafenacil.

4. *Subchronic toxicity*. In a 90–day subchronic neurotoxicity study in rats, butafenacil was not neurotoxic when administered in the diet for 13 weeks at concentrations resulting in average daily test substance intakes of 0, 7.8, 23.5, or 74.4 mg/kg/day for males or at 0, 8.7, 26.0, or 78.9 mg/kg/day for females. There were no treatment-related neurobehavioral or motor activity effects, no macroscopic findings and no microscopic findings in central or peripheral nervous tissue. All animals survived until scheduled sacrifice and there were no treatment-related clinical observations. Histopathology of the liver revealed effects in animals of both sexes from the top dose group. In addition, one male at 23.5 mg/kg/day showed single cell necrosis of hepatocytes. In conclusion, subchronic dietary administration of butafenacil to rats did not produce neurotoxic effects at any dose level. The NOAEL for liver toxicity was 7.8 mg/kg/day for males and 26.0 mg/kg/day for females.

5. *Chronic toxicity*. Butafenacil technical was not oncogenic in rats or

mice. A summary of results of chronic toxicity studies in rats, mice, and dogs indicates that the primary target organ from chronic exposure is liver, with effects on hematology parameters and body weight.

In a 12–month chronic oral toxicity study, dogs were fed capsules containing butafenacil that resulted in daily test substance intakes of 0, 20, 100, 500, or 1,000 mg/kg/day. The administration of butafenacil caused findings only at 500 and 1,000 mg/kg/day. These effects consisted of loss in the body weight of male animals at 1,000 mg/kg/day. Hematology parameters were slightly affected at 500 and 1,000 mg/kg/day. Based on body weight loss at 1,000 mg/kg/day, the increase in relative liver weight at 1,000 mg/kg/day and the hematological effects at 500 and 1,000 mg/kg/day, the maximum tolerance dose (MTD) was achieved at 1,000 mg/kg/day and the NOAEL for chronic toxicity in dogs is 100 mg/kg/day.

In an 18–month oncogenicity study, mice were fed diets containing butafenacil that resulted in average daily test substance intakes of 0, 0.12, 0.36, 1.18, 6.78 mg/kg/day. The treatment of mice with butafenacil for 18 months revealed effects on hematology parameters in males at 1.18 and 6.78 mg/kg/day, increased liver weights at 6.78 mg/kg/day in both sexes and histopathological findings indicating that the liver was the target organ of toxicity. The MTD was achieved at 6.78 mg/kg/day. Dose responsive non-neoplastic changes in the liver occurred at 1.18 mg/kg/day in males and at 6.78 mg/kg/day in both sexes. Butafenacil was not carcinogenic in this study. Based on the hematology and liver effects, the NOAEL for chronic toxicity in mice was established at 0.36 mg/kg/day in males and 1.20 mg/kg/day in females.

In a 2–year chronic toxicity and carcinogenicity study, rats were fed diets containing butafenacil that resulted in average (sexes combined) daily test substance intakes of 0, 0.42, 1.22, 4.10, or 12.2 mg/kg/day. Treatment had no effect on survival and there were no treatment-related clinical signs. There were no effects on food consumption and body weight. Hematology and clinical chemistry data were comparable in all groups. Necropsy revealed no changes in organ weights.

The treatment of rats with butafenacil for 24 months indicated the liver as the target organ, with non-neoplastic histopathological findings in the liver in both sexes at 4.10 and 12.2 mg/kg/day. Based on the liver effects, the MTD was achieved at 12.2 mg/kg/day. No increased incidence of tumor formation was noted, indicating that butafenacil was not carcinogenic in this study. Based on the liver effects at 4.10 and 12.2 mg/kg/day, the NOAEL was established at 1.14 mg/kg/day (1.14 mg/kg/day in males and 1.30 mg/kg/day in females).

6. *Animal metabolism*. The major initial metabolic processes in rat involve the hydrolysis of the allyl ester to form the free carboxylic acid compounds. Parent compound was of significant abundance only in the feces from the high dose group. Subsequent metabolic routes involve reduction, hydroxylation, and opening of the uracil ring. The phenyl and uracil rings remain connected and all major metabolites have the unchanged phenyl structure.

7. *Metabolite toxicology*. Toxicity studies, including acute oral, mutagenicity, and 28–day feeding studies were conducted with major metabolites found in environmental studies. An acute oral and a mutagenicity test were conducted. The acute oral LD_{50} was at least >2,000 mg/kg and all mutagenicity studies were negative. The 28–day feeding study was conducted with major metabolites at 0, 300, 2,000, and 10,000 ppm. The target organ was confirmed as the liver for all test materials. Based on the data from the studies and reasons cited, none of these metabolites is considered to be of toxicological concern.

8. *Endocrine disruption*. Butafenacil does not belong to a class of chemicals known or suspected of having adverse effects on the endocrine system. There is no evidence that butafenacil has any effect on endocrine function in development or reproductive studies. Furthermore, histological investigation of endocrine organs in chronic dog, mouse, and rat studies did not indicate that the endocrine system is targeted by butafenacil.

9. *Neurotoxicity*. In an acute neurotoxicity study in rats, butafenacil was administered orally by gavage at 0 or 2,000 mg/kg. All animals survived and body weight development and food consumption were not affected by treatment. There were no toxicologically relevant clinical signs nor changes in observations and functional tests conducted as part of the functional observational battery. No treatment-related effects on any of the different motor activity parameters were seen. Macroscopical and microscopical examination of the multiple areas of the central and peripheral nervous system, the eyes, optic nerves, and skeletal muscle of the male and female, control and treated animals did not reveal any treatment-related neuropathic changes. In conclusion, butafenacil was devoid of any acute neurotoxicity when administered to rats at a single oral dose of 2,000 mg/kg. The NOAEL was greater than 2,000 mg/kg body weight.

C. Aggregate Exposure

1. *Dietary exposure*. Dietary exposure from butafenacil potentially exists through both food commodities and drinking water. Each exposure pathway is addressed below.

i. *Food*. Chronic and acute dietary exposure evaluations for butafenacil were performed using average field trial residues and assuming 100% crop treated. Cotton is the only raw agricultural commodity included in the assessment. All dietary exposure evaluations were made using the Dietary Exposure Evaluation Model (DEEM) and the USDA's Continuing Survey of Food Intake By Individuals (1994–96). Chronic exposure was compared to a chronic NOAEL of 100.0 mg/kg body weight/day (bwt/day) from a 1–year dog study. The acute NOAEL is 100 mg/kg in a rabbit teratology study based on maternal body weight loss and increased post-implantation loss. A 100X-uncertainty factor was assumed for both chronic and acute values. Both chronic and acute exposures were expressed as a percent of a reference dose of 1.0 mg/kg/day.

Secondary residues in animal commodities were calculated by constructing diets for beef and dairy cattle, poultry and swine in order to calculate anticipated residues in meat, fat, milk and pork. The beef cattle diet was used to calculate meat, fat and organ meats. The dairy cattle diet was used to estimate residues in milk. The swine diet was used for secondary residues in pork commodities and the poultry diet was used for residues in poultry commodities. Each diet was calculated using averaged field trial residues. Beef (cattle and dairy), and swine transfer factors were derived from a lactating goat 14C-metabolism study.

The results were favorable in both acute and chronic assessment scenarios. Acute and chronic exposure values were negligible (less than 0.01% of the acute and chronic reference dose of 1 mg/kg bwt/day.

The major contributors to chronic exposure (children 1–6 years old) were milk, accounting for 48% of the total exposure, cottonseed oil accounting for 28%, and meat (beef) products accounting for 25% of the total. In the U.S. population, the percentage contribution to the chronic exposure from meat (beef) products and milk were each 34% and cottonseed oil

accounted for 31% of the total. Major sources of acute exposures for the U.S. population and children 1–6 years old included cottonseed oil and meat (beef) commodities. The %RfD for all populations was less than 0.01% of the reference dose (RfD) of 1.0 mg/kg bwt/day.

ii. *Drinking water—a. Acute drinking water exposure.* The estimated tier 1 maximum concentrations of butafenacil in surface water and ground water are 1.98 ppb and 0.000038 ppb, respectively. The acute RfD for butafenacil is 1.0 mg/kg bwt/day. From the acute dietary exposure analysis, acute food exposure from the uses of butafenacil were neglegible for all populations. Using this information, acute drinking water levels of comparison (DWLOC) were calculated for butafenacil. The lowest DWLOC was 10,000 ppb. Based on this analysis, butafenacil estimated environmental concentrations (EECs) do not exceed the calculated acute DWLOCs.

b. *Chronic drinking water exposure.* The estimated maximum concentrations of butafenacil in surface water and ground water are 0.033 ppb Day 56 EEC/3 from Generic Expected Environmental Concentration (GENEEC) and 0.000025 parts per billion (ppb) (SCI-GROW, maximum at 0.16 lb active ingredient/acre/year, respectively. The chronic RfD for butafenacil is 1.0 mg/kg bwt/day. From the chronic dietary exposure analysis, an exposure to butafenacil is negligible for all populations. Based on EPA's ''Interim Guidance for Conducting Drinking Water Exposure and Risk Assessments'' document (December 2, 1997), chronic drinking water levels of comparison were calculated for butafenacil. The lowest DWLOC was 10,000 ppb. Based on this analysis, butafenacil EECs do not exceed the calculated chronic DWLOCs.

2. *Non-dietary exposure.* There are no residential uses and therefore, no need for non-dietary exposure assessment for this use.

D. Cumulative Effects

The potential for cumulative effects of butafenacil and other substances that have a common mechanism of toxicity has been considered. Butafenacil is a member of the class of herbicides designated as uracil-derivatives. There is no reliable information to indicate that toxic effects produced by butafenacil would be cumulative with those of any other chemical including another pesticide. Therefore, Syngenta believes it is appropriate to consider only the potential risks of butafenacil in an aggregate risk assessment.

E. Safety Determination

1. *U.S. population.* Using the acute and chronic exposure assumptions and the proposed RfDs described above, the aggregate exposure, including drinking water to butafenacil to the U.S. population (48 contiguous states, all seasons) was calculated to be less than 0.01% of the RfD of 1.0 mg/kg bwt/day. Therefore, Syngenta concludes that there is reasonable certainty that no harm will result from the aggregate acute or chronic exposure to butafenacil residues.

2. *Infants and children.* In assessing the potential for additional sensitivity of infants and children to residues of butafenacil, data from developmental toxicity studies in the rat and rabbit and a multi-generation reproduction study in the rat have been considered. In the rat and rabbit teratology studies there was no evidence of teratogenicity. Delayed fetal development was apparent only at maternally toxic doses of butafenacil technical in rabbits. In the rabbit study 1,000 mg/kg/day caused effects indicative of maternal toxicity. There was no indication of developmental toxicity in rabbit offspring at 100 mg/kg/day. The NOAEL for both maternal and developmental toxicity was established at 100 mg/kg/day in rabbits.

In the rat teratogenicity study there was no observation of maternal toxicity. Body weight and food consumption were comparable in all groups. Reproduction and fetal parameters were not impaired. Butafenacil was not teratogenic and not toxic to the progeny. Maternal parameters were not affected. The NOAEL for both maternal and developmental toxicity was ≥1,000 mg/kg/day, the highest dose level tested.

In a rat multi-generation study the NOAEL for systemic toxicity in both sexes and both generations of rats was 2.48 mg/kg/day. There were no effects on the reproductive parameters and the NOAEL for reproductive toxicity was ≥1,000 ppm. Offspring effects were observed only at dose levels that also produced parental toxicity. There is no evidence that developing offsprings are more sensitive than adults to the effects of butafenacil.

FFDCA section 408 provides that EPA may apply an additional safety factor for infants and children in the case of threshold effects to account for prenatal and postnatal toxicity and the completeness of the data base. Based on the current toxicological requirements, the data base for butafenacil relative to prenatal and postnatal effects for children is complete. Further, for butafenacil, the developmental studies showed no increased sensitivity in fetuses as compared to maternal animals following in-utero exposures in rats and rabbits, and no increased sensitivity in pups as compared to the adults in the multi-generation reproductive toxicity study. Therefore, it is concluded, that an additional uncertainty factor is not warranted to protect the health of infants and children and that a RfD of 1.0 mg/kg bwt/day is appropriated for assessing aggregate risk to infants and children from butafenacil.

F. International Tolerances

There are no codex established for residues of butafenacil on cotton, undelinted seed or cotton, gin byproducts.

[FR Doc. 03–4386 Filed 2–25–03; 8:45 am]

BILLING CODE 6560–50–S

ENVIRONMENTAL PROTECTION AGENCY

[OPP–2003–0042; FRL–7293–4]

Issuance of an Experimental Use Permit

AGENCY: Environmental Protection Agency (EPA).

ACTION: Notice.

SUMMARY: EPA has granted an experimental use permit (EUP) to the following pesticide applicant. An EUP permits use of a pesticide for experimental or research purposes only in accordance with the limitations in the permit.

FOR FURTHER INFORMATION CONTACT: Denise Greenway, Biopesticides and Pollution Prevention Division (7511C), Office of Pesticide Programs, Environmental Protection Agency, 1200 Pennsylvania Ave., NW., Washington, DC 20460–0001; telephone number: (703) 308–8263; e-mail address: *greenway.denise@epa.gov.*

SUPPLEMENTARY INFORMATION:

I. General Information

A. Does this Action Apply to Me?

This action is directed to the public in general. Although this action may be of particular interest to those persons who conduct or sponsor research on pesticides, the Agency has not attempted to describe all the specific entities that may be affected by this action. If you have any questions regarding the information in this action, consult the person listed under **FOR FURTHER INFORMATION CONTACT.**

B. How Can I Get Copies of This Document and Other Related Information?

1. *Docket.* EPA has established an official public docket for this action under docket identification (ID) number OPP–2003–0042. The official public docket consists of the documents specifically referenced in this action, any public comments received, and other information related to this action. Although a part of the official docket, the public docket does not include Confidential Business Information (CBI) or other information whose disclosure is restricted by statute. The official public docket is the collection of materials that is available for public viewing at the Public Information and Records Integrity Branch (PIRIB), Rm. 119, Crystal Mall #2, 1921 Jefferson Davis Hwy., Arlington, VA. This docket facility is open from 8:30 a.m. to 4 p.m., Monday through Friday, excluding legal holidays. The docket telephone number is (703) 305–5805.

2. *Electronic access.* You may access this **Federal Register** document electronically through the EPA Internet under the ''**Federal Register**'' listings at *http://www.epa.gov/fedrgstr/.*

An electronic version of the public docket is available through EPA's electronic public docket and comment system, EPA Dockets. You may use EPA Dockets at *http://www.epa.gov/edocket/* to submit or view public comments, access the index listing of the contents of the official public docket, and to access those documents in the public docket that are available electronically. Although not all docket materials may be available electronically, you may still access any of the publicly available docket materials through the docket facility identified in Unit I.B.1. Once in the system, select ''search,'' then key in the appropriate docket ID number.

II. EUP

EPA has issued the following EUP:

73049–EUP–2. Issuance. Valent BioSciences Corporation, 870 Technology Way, Libertyville, IL 60048. This EUP allows the use of 3,924 pounds of the biochemical plant regulator 6-benzyladenine on 9,680 acres of apple and on 300 acres of pistachio to evaluate its efficacy for fruit thinning and sizing for apple and its mitigation of alternate-year bearing for pistachio. The program is authorized only in the States of California, Idaho, Maine, Maryland, Massachusetts, Michigan, New Jersey, New York, North Carolina, Ohio, Oregon, Pennsylvania, Utah, Vermont, Virginia, Washington, West Virginia, and Wisconsin. The EUP is effective from January 22, 2003 to January 31, 2005. A temporary tolerance exemption to expire on January 31, 2005 has been established for residues of the active ingredient in or on apple and pistachio.

Authority: 7 U.S.C. 136c.

List of Subjects

Environmental protection, Experimental use permits.

Dated: February 13, 2003.

Janet L. Andersen,

Director, Biopesticides and Pollution Prevention Division, Office of Pesticide Programs.

[FR Doc. 03–4525 Filed 2–25–03; 8:45 am]

BILLING CODE 6560–50–S

ENVIRONMENTAL PROTECTION AGENCY

[OPPT–2002–0066; FRL–7293–5]

Endocrine Disruptor Screening Program, Proposed Chemical Selection Approach for Initial Round of Screening; Extension of Comment Period

AGENCY: Environmental Protection Agency (EPA).

ACTION: Notice; extension of comment period.

SUMMARY: In a **Federal Register** Notice that published on December 30, 2002, EPA sets forth for public comment the approach EPA plans to use for selecting the first group of chemicals to be screened in the Agency's Endocrine Disruptor Screening Program (EDSP). EPA requested that comments be submitted on or before March 1, 2003. In response to several requests to extend the deadline for submitting comments, EPA is hereby extending the comment period to April 1, 2003.

DATES: Comments, identified by docket ID number OPPT–2002–0066, must be received on or before April 1, 2003.

ADDRESSES: Comments may be submitted electronically, by mail, or through hand delivery/courier. Follow the detailed instructions as provided in Unit I.C. of the December 30, 2002 **Federal Register** document.

FOR FURTHER INFORMATION CONTACT: For general information contact: Barbara Cunningham, Acting Director, Environmental Assistance Division (7408M), Office of Pollution Prevention and Toxics, Environmental Protection Agency, 1200 Pennsylvania Ave., NW., Washington, DC 20460–0001; telephone number: (202) 554–1404; e-mail address: *TSCA-Hotline@epa.gov.*

For technical information contact: Greg Schweer, Exposure Assessment Coordination and Policy Division (7203M), Office of Science Coordination and Policy, Environmental Protection Agency, 1200 Pennsylvania Ave., NW., Washington, DC 20460–0001; telephone number: (202) 564–8469; e-mail address: *schweer.greg@epa.gov.*

SUPPLEMENTARY INFORMATION:

I. General Information

A. Does this Action Apply to Me?

This action is directed to the public in general, and may be of particular interest to those persons who are or may be required to conduct testing of chemical substances under the Toxic Substances Control Act (TSCA), the Federal Food, Drug and Cosmetic Act (FFDCA), the Safe Drinking Water Act (SDWA), or the Federal Insecticide, Fungicide, and Rodenticide Act (FIFRA). Since other entities may also be interested, the Agency has not attempted to describe all the specific entities that may be affected by this action. If you have any questions regarding the applicability of this action to a particular entity, consult the technical person listed under **FOR FURTHER INFORMATION CONTACT.**

B. How Can I Get Copies of This Document and Other Related Information?

1. *Docket.* EPA has established an official public docket for this action under docket identification (ID) number OPPT–2002–0066. The official public docket consists of the documents specifically referenced in this action, any public comments received, and other information related to this action. Although a part of the official docket, the public docket does not include Confidential Business Information (CBI) or other information whose disclosure is restricted by statute. The official public docket is the collection of materials that is available for public viewing at the EPA Docket Center, Rm. B102-Reading Room, EPA West, 1301 Constitution Ave., NW., Washington, DC. The EPA Docket Center is open from 8:30 a.m. to 4:30 p.m., Monday through Friday, excluding legal holidays. The EPA Docket Center Reading Room telephone number is (202) 566–1744 and the telephone number for the OPPT Docket, which is located in EPA Docket Center, is (202) 566–0280.

2. *Electronic access.* You may access this **Federal Register** document electronically through the EPA Internet

under the ''**Federal Register**'' listings at *http://www.epa.gov/fedrgstr/.*

An electronic version of the public docket is available through EPA's electronic public docket and comment system, EPA Dockets. You may use EPA Dockets at http://www.epa.gov/edocket/ to submit or view public comments, access the index listing of the contents of the official public docket, and to access those documents in the public docket that are available electronically. Although not all docket materials may be available electronically, you may still access any of the publicly available docket materials through the docket facility identified in Unit I.B.1. Once in the system, select ''search,'' then key in the appropriate docket ID number.

C. How and to Whom Do I Submit Comments?

To submit comments or access the official public docket, please follow the detailed instructions as provided in Unit I.C. of the **SUPPLEMENTARY INFORMATION** of the December 30, 2002 **Federal Register** document. If you have questions, consult the person listed under **FOR FURTHER INFORMATION CONTACT**.

II. What Action is EPA taking?

This document extends the public comment period established in the **Federal Register** issued on December 30, 2002 (67 FR 79611). In that document, EPA sought public comment on the approach EPA plans to use for selecting the first group of chemicals to be screened in the Agency's Endocrine Disruptor Screening Program (EDSP). EPA is hereby extending the comment period, which was set to end on March 1, 2003, to April 1, 2003.

List of Subjects

Environmental protection, Chemicals, Endocrine disruptors, Pesticides and pests.

Dated: February 10, 2003.

Susan B. Hazen,

Acting Assistant Administrator for Prevention, Pesticides and Toxic Substances.

[FR Doc. 03–4385 Filed 2–25–03; 8:45 am]

BILLING CODE 6560–50–S

ENVIRONMENTAL PROTECTION AGENCY

[FRL–7455–5]

Public Notice of Draft National Pollutant Discharge Elimination System (NPDES) General Permit for Storm Water Discharges from Federal Facility Small Municipal Separate Storm Sewer Systems (MS4s) in Colorado

AGENCY: Environmental Protection Agency (EPA).

ACTION: Notice of availability of proposed NPDES general permit.

SUMMARY: Region VIII of EPA is hereby giving notice of its tentative determination to issue an NPDES general permit for regulated storm water discharges from small municipal separate storm sewer systems (MS4s). The general permit is applicable to Federal Facilities within the State of Colorado. Only Federal Facilities located in urbanized areas (as defined by the 2000 U.S. Census) within the State of Colorado must apply. Federal facilities that are currently known to be located within Colorado urbanized areas, and will need to apply for coverage under the general permit include: Fort Carson; the General Services Administration's Denver Federal Center; Peterson Air Force Base; the U.S. Air Force Academy; the U.S. Department of Commerce—National Institute of Standards and Technology, Boulder Campus; the U.S. Bureau of Prisons Federal Correctional Institution, Englewood; and the Veterans Affairs Medical Center Denver. Additional Federal Facilities may need to apply for permit coverage at a later date based on subsequent Census data. This notice announces the availability of the proposed general permit and fact sheet for public comment.

NPDES permit coverage is required for small MS4s in accordance with final EPA regulations for Phase II storm water discharges (64 FR 68722, December 8, 1999). Operators of Phase II-designated small MS4s (regulated small MS4s) are required to submit a Notice of Intent (NOI) to EPA Region VIII to be covered under the general permit.

In accordance with the general permit, regulated small MS4 operators must develop, implement, and enforce a program designed to reduce the discharge of pollutants from their MS4s to the maximum extent practicable (MEP) to protect water quality and to satisfy the appropriate water quality requirements of the Clean Water Act. The small MS4 program must include the following six minimum control measures: public education and outreach; public involvement and participation; illicit discharge detection and elimination; construction site runoff control; post-construction runoff control; and pollution prevention/ good housekeeping. The rule assumes the use of narrative, rather than numeric, effluent limitations achieved through the implementation of best management practices (BMPs). Operators must establish BMPs and measurable goals for each minimum measure in the permit application. However, applicants will have up to five years to fully develop and implement their storm water management program.

State	*Permit No.*	*Areas covered by the general permit*
Colorado	COR042000 ..	Federal Facilities in the State of Colorado, except those located in Indian Country.

DATES: Public comments on this proposal must be received or postmarked no later than March 28, 2003. A public hearing may be requested within the comment period concerning the proposed permit.

ADDRESSES: Public comments or requests for a public hearing should be sent to: Greg Davis (8EPR–EP); Attention: NPDES Permits; U.S. EPA, Region VIII; 999 18th Street, Suite 300; Denver, CO 80202–2466. Public comments will also be accepted via electronic mail (E-mail) at *r8npdes@epa.gov.*

Public Comment Period

Public comments are invited. Comments must be received or postmarked no later than March 28, 2003. Each comment should cite the page number and, where possible, the section(s) and/or paragraph(s) in the draft permit or Fact Sheet to which each comment refers. Commenters should use a separate paragraph for each issue discussed. Comments must be sent to the address given above in the **ADDRESSES** section.

FOR FURTHER INFORMATION CONTACT: For a copy of the draft permit and Fact Sheet or for further information on the draft permit, contact either Greg Davis (303) 312–6082 (*davis.gregory@epa.gov*) or Vern Berry, (303) 312–6234 (*berry.vern@epa.gov*), or at the address above in the **ADDRESSES** section. Copies of the draft permit and Fact Sheet may be downloaded from the EPA Region VIII Web site at *http://www.epa.gov/*

region8/water/stormwater/downloads.html.

SUPPLEMENTARY INFORMATION: When the general permit is issued, it will be published by reference in the **Federal Register**. The general permit will be effective on the date specified in the **Federal Register** with an expiration five years from such date. Region VIII is not issuing NPDES General Permits for Storm Water Discharges from Small Municipal Separate Storm Sewer Systems (MS4s) located in Indian country. No MS4s in Indian country have been determined to require small MS4 permit coverage at this time.

Administrative Record: The proposed general permit and other related documents in the administrative record are on file in the EPA Region VIII NPDES file room and may be inspected upon request any time between 8 a.m. and 4 p.m., Monday through Friday, excluding legal holidays, at the address provided in the **ADDRESSES** section above. Requests to view these files in the Region VIII NPDES file room should be sent to Greg Davis by phone at 303–312–6082, or by e-mail at *davis.gregory@epa.gov.*

Executive Order 12866

Under Executive Order 12866 (58 FR 51735, October 4, 1993) the Agency must determine whether the regulatory action is ''significant'' and therefore subject to OMB review and the requirements of the Executive Order. The Order defines ''significant regulatory action'' as one that is likely to result in a rule that may have an annual effect on the economy of $100 million or more or adversely affect in a material way the economy, a sector of the economy, productivity, competition, jobs, the environment, public health or safety, or State, local, or Tribal governments or communities; create a serious inconsistency or otherwise interfere with an action taken or planned by another agency; materially alter the budgetary impact of entitlements, grants, user fees, or loan programs or the rights and obligations of recipients thereof; or raise novel legal or policy issues arising out of legal mandates, the President's priorities, or the principles set forth in the Executive Order.

OMB has waived review of NPDES general permits under the terms of Executive Order 12866.

Regulatory Flexibility Act

Issuance of an NPDES general permit is not subject to rulemaking requirements, including the requirement for a general notice of proposed rulemaking, under APA section 553 or any other law, and is thus not subject to the RFA requirement to prepare an IRFA.

The APA defines two broad, mutually exclusive categories of agency action—''rules'' and ''orders.'' Its definition of ''rule'' encompasses ''an agency statement of general or particular applicability and future effect designed to implement, interpret, or prescribe law or policy or describing the organization, procedure, or practice requirements of an agency * * *'' APA section 551(4). Its definition of ''order'' is residual: ''a final disposition * * * of an agency in a matter other than rule making but including licensing.'' APA section 551(6) (emphasis added). The APA defines ''license'' to ''include * * * an agency permit * * *'' APA section 551(8). The APA thus categorizes a permit as an order, which by the APA's definition is not a rule. Section 553 of the APA establishes ''rule making'' requirements. The APA defines ''rule making'' as ''the agency process for formulating, amending, or repealing a rule.'' APA section 551(5). By its terms, then, section 553 applies only to ''rules'' and not also to ''orders,'' which include permits.

Unfunded Mandates Reform Act

Section 201 of the Unfunded Mandates Reform Act (UMRA), Public Law 104–4, generally requires Federal agencies to assess the effects of their ''regulatory actions'' on State, local, and tribal governments and the private sector. UMRA uses the term ''regulatory actions'' to refer to regulations. (*See,* e.g., UMRA section 201, ''Each agency shall * * * assess the effects of Federal regulatory actions * * * (other than to the extent that such regulations incorporate requirements specifically set forth in law)'' (emphasis added)). UMRA section 102 defines ''regulation'' by reference to 2 U.S.C. 658 which in turn defines ''regulation'' and ''rule'' by reference to section 601(2) of the Regulatory Flexibility Act (RFA). That section of the RFA defines ''rule'' as ''any rule for which the agency publishes a notice of proposed rulemaking pursuant to section 553(b) of [the Administrative Procedure Act (APA)], or any other law. * * *''

As discussed in the RFA section of this notice, NPDES general permits are not ''rules'' under the APA and thus not subject to the APA requirement to publish a notice of proposed rulemaking. NPDES general permits are also not subject to such a requirement under the CWA. While EPA publishes a notice to solicit public comment on draft general permits, it does so pursuant to the CWA section 402(a) requirement to provide ''an opportunity for a hearing.'' Thus, NPDES general permits are not ''rules'' for RFA or UMRA purposes.

Authority: Clean Water Act, 33 U.S.C. 1251 *et seq.*

Dated: February 14, 2003.

Stephen S. Tuber,

Acting Assistant Regional Administrator, Office of Partnerships and Regulatory Assistance.

[FR Doc. 03–4521 Filed 2–25–03; 8:45 am]

BILLING CODE 6560–50–P

FEDERAL MARITIME COMMISSION

Notice of Agreement(s) Filed

The Commission hereby gives notice of the filing of the following agreement(s) under the Shipping Act of 1984. Interested parties can review or obtain copies of agreements at the Washington, DC offices of the Commission, 800 North Capitol Street, NW., Room 940. Interested parties may submit comments on an agreement to the Secretary, Federal Maritime Commission, Washington, DC 20573, within 10 days of the date this notice appears in the **Federal Register.**

Agreement No.: 200866–002.

Title: Broward-King Ocean Marine Terminal Agreement.

Parties: Broward County, Board of County Commissioners, King Ocean Service de Venezuela, S.A.

Synopsis: The proposed amendment revises the minimum use standards and the charges covered by the agreement. It also adapts the language of the agreement to comply with current state and county law and regulations.

By Order of the Federal Maritime Commission.

Dated: February 21, 2003.

Bryant L. VanBrakle,

Secretary.

[FR Doc. 03–4558 Filed 2–25–03; 8:45 am]

BILLING CODE 6730–01–P

FEDERAL RESERVE SYSTEM

Formations of, Acquisitions by, and Mergers of Bank Holding Companies

The companies listed in this notice have applied to the Board for approval, pursuant to the Bank Holding Company Act of 1956 (12 U.S.C. 1841 *et seq.*) (BHC Act), Regulation Y (12 CFR part 225), and all other applicable statutes and regulations to become a bank holding company and/or to acquire the assets or the ownership of, control of, or

the power to vote shares of a bank or bank holding company and all of the banks and nonbanking companies owned by the bank holding company, including the companies listed below.

The applications listed below, as well as other related filings required by the Board, are available for immediate inspection at the Federal Reserve Bank indicated. The application also will be available for inspection at the offices of the Board of Governors. Interested persons may express their views in writing on the standards enumerated in the BHC Act (12 U.S.C. 1842(c)). If the proposal also involves the acquisition of a nonbanking company, the review also includes whether the acquisition of the nonbanking company complies with the standards in section 4 of the BHC Act (12 U.S.C. 1843). Unless otherwise noted, nonbanking activities will be conducted throughout the United States. Additional information on all bank holding companies may be obtained from the National Information Center Web site at *http://www.ffiec.gov/nic/.*

Unless otherwise noted, comments regarding each of these applications must be received at the Reserve Bank indicated or the offices of the Board of Governors not later than March 24, 2003.

A. Federal Reserve Bank of Cleveland (Stephen J. Ong, Vice President) 1455 East Sixth Street, Cleveland, Ohio 44101–2566:

1. Charter One Financial, Inc., Cleveland, Ohio; to acquire 100 percent of the voting shares of Advance Bancorp, Inc., Homewood, Illinois, and thereby indirectly acquire Advance Bank, Lansing, Illinois.

B. Federal Reserve Bank of Richmond (A. Linwood Gill, III, Vice President) 701 East Byrd Street, Richmond, Virginia 23261–4528:

1. Virginia Financial Group, Inc., Culpeper, Virginia; to acquire 9.9 percent of the voting shares of Albemarle First Bank, Charlottesville, Virginia.

C. Federal Reserve Bank of Atlanta (Sue Costello, Vice President) 1000 Peachtree Street, N.E., Atlanta, Georgia 30309–4470:

1. Mountain Bancshares, Inc., Dawsonville, Georgia; to become a bank holding company by acquiring 100 percent of the voting shares of Mountain State Bank, Dawsonville, Georgia.

D. Federal Reserve Bank of Chicago (Phillip Jackson, Applications Officer) 230 South LaSalle Street, Chicago, Illinois 60690–1414:

1. Iroquois Bancorp, Inc., Gilman, Illinois; to acquire 42.19 percent of the voting shares of JW Bancorp, Inc., Winchester, Illinois, and thereby indirectly acquire John Warner Financial Corporation, and The John Warner Bank, both of Clinton, Illinois.

2. JW Bancorp, Inc., Winchester, Illinois; to become a bank holding company by acquiring 100 percent of the voting shares of John Warner Financial Corporation, and thereby indirectly acquire The John Warner Bank, both of Clinton, Illinois.

E. Federal Reserve Bank of Kansas City (Susan Zubradt, Assistant Vice President) 925 Grand Avenue, Kansas City, Missouri 64198–0001:

1. Bank Capital Corporation, Phoenix, Arizona; to become a bank holding company by acquiring 100 percent of the voting shares of The Biltmore Bank of Arizona, Phoenix, Arizona.

Board of Governors of the Federal Reserve System, February 19, 2003.

Robert deV. Frierson,

Deputy Secretary of the Board.

[FR Doc. 03–4390 Filed 2–26–03; 8:45 am]

BILLING CODE 6210–01–P

FEDERAL TRADE COMMISSION

Public Workshops: Workshop 1: Technologies for Protecting Personal Information: The Consumer Experience; Workshop 2: Technologies for Protecting Personal Information: The Business Experience

AGENCY: Federal Trade Commission (FTC).

ACTION: Notice announcing two public workshops and requesting public comment and participation.

SUMMARY: The FTC is planning to host two public workshops to explore the role of technology in helping consumers and businesses protect the privacy of their personal information, including the steps taken to keep their information secure. Workshop 1 will focus on technological tools available to consumers and whether and how consumers are using them. Workshop 2 will focus on how businesses use technology to manage their information practices and provide security.

DATES: Workshop 1, The Consumer Experience, will be held on Wednesday, May 14, 2003, from 8:30 a.m. to 5 p.m., in the Federal Trade Commission's Satellite Building now located at 601 New Jersey Avenue, NW., Washington, DC. Workshop 2, The Business Experience, will occur on Wednesday, June 4, 2003, also in the Satellite Building. The events are open to the public and attendance is free of charge. Pre-registration is not required.

Requests to Participate as a Panelist: As discussed below, written requests to participate as a panelist in either or both of the workshops must be filed on or before Wednesday, March 26, 2003. Persons filing requests to participate as a panelist will be notified on or before Wednesday, April 9, 2003, if they have been selected to participate.

Written Comments: Whether or not selected to participate, persons may submit written comments on the Questions to be Addressed at the workshop. Such comments must be filed on or before Wednesday, April 23, 2003. For further instructions on submitting comments and requests to participate, please see the ''Form and Availability of Comments'' and ''Requests to Participate as a Panelist in the Workshop'' sections below. To read our policy on how we handle the information you may submit, please visit *http://www.ftc.gov/techworkshop.*

ADDRESSES: Written comments and requests to participate as a panelist in the workshop should be submitted to: Secretary, Federal Trade Commission, Room 159, 600 Pennsylvania Avenue, NW., Washington, DC 20580. Alternatively, they may be e-mailed to *techworkshop@ftc.gov.*

FOR FURTHER INFORMATION CONTACT: Toby Milgrom Levin, Division of Financial Practices, 202–326–3713, or James A. Silver, Division of Financial Practices, 202–326–3708. The above staff can be reached by mail at: Federal Trade Commission, 600 Pennsylvania Avenue, NW., Washington, DC 20580.

SUPPLEMENTARY INFORMATION:

Background and Proposed Agenda

Since 1995, the FTC has sought to understand the many consumer issues raised by the collection and use of consumers' personal information in our fast-changing information economy. Commission workshops have examined the privacy issues raised by the use of this information and, more recently, the important and complementary role that security plays in providing meaningful protections for it. The Commission has also undertaken a wide variety of education and enforcement initiatives to reduce the harms caused by the disclosure of personal information, such as identity theft, unwarranted intrusions, violations of privacy promises, and breaches of customer databases. As part of this ongoing examination, the Commission is announcing two workshops designed to explore the role of technology in protecting personal information.

Technology has been widely heralded as a promising solution to challenges that the collection and use of information present. A number of

products promise to help consumers control their sensitive information and guard against internal and external threats. Similarly, there are an increasing number of products designed to help businesses manage the consumer information they maintain and ensure that it is secure. Despite the widespread availability of these products, however, it is unclear just how much consumers and businesses are using them and whether they are meeting consumer and business needs in this area. Therefore, as more and more consumers share personal information online and use ''always on'' Internet connections, it is useful to examine the current role that technology plays in protecting consumers' personal information.

The workshops being announced will examine, first, the role technology plays for consumers seeking to protect their own information and, second, the role it plays for businesses seeking to protect the consumer information that they maintain. Both workshops will also examine the changes that have been made in the security area since the Federal Trade Commission's May 2002 workshop on consumer information security.

Questions to be addressed at the workshops may include:

A. Workshop 1

Technologies for Protecting Personal Information: The Consumer Experience

1. Are consumers using technology to help manage the collection and use of their personal information? Why or why not?

- What types of technologies are available or under development to help consumers manage the collection and use of their personal information?
- Which of these technologies are consumers using, which are not being used, and why?
- What factors influence consumers' willingness to use these technologies?
- Is there empirical data showing which technologies consumers are using and why?
- Is consumer education needed to make consumers aware of these technologies and to help them use them?
- What types of technologies do consumers want that do not yet exist?

2. What role can automated privacy notices, such as P3P, play to help consumers manage the collection and use of their personal information?

- What technologies are available or under development that automatically match consumer preferences to businesses' information practices? What is their current status of development and/or implementation?
- What are the strengths and limitations of these technologies?
- Are there obstacles to widespread adoption of these technologies, and if so, how could they be addressed?
- How do automated privacy notices interface with the various types of privacy notices—*e.g.,* short, layered, full accountability—currently in use? Do automated notices raise any special liability concerns?

3. Are consumers using technology to help protect their information security? Why or why not?

- What types of technologies are available or under development to help consumers protect their information security?
- Which information security-enhancing technologies are consumers using, which are not being used, and why?
- What factors influence consumers' willingness to use information security-enhancing technologies?
- Is there any empirical data showing which technologies consumers are using and why? For example, are consumers downloading patches, updating virus protection, and using firewalls?
- What information security-enhancing technologies do consumers want that do not yet exist?
- Are the available technologies adequate to address known vulnerabilities?
- Is there a need for more ''built-in'' technology solutions and features that are easy for consumers to access and use? Should business make it easier for consumers with high-speed access to install effective firewalls?
- What are business, government agencies, and others doing to raise consumer awareness of security issues and help create a ''culture of security''?

B. Workshop 2

Technologies for Protecting Personal Information: The Business Experience

1. How are businesses using technology to manage their information practices?

- What types of technologies are available or under development to help businesses manage their information practices and verify their website's privacy policy compliance?
- Which technologies are businesses using, which are not being used, and why?
- Is there any empirical data showing which technologies businesses are using and why?
- How have businesses incorporated information management technologies into their business operations? Do such technologies affect businesses' efforts to engage in targeted marketing? Have they affected businesses' profits?
- What are the costs and benefits, including any costs and benefits to competition, of implementing their technologies?
- Are there limits to technology's ability to manage consumer information? What role do people, policies, and organizational structure play in implementing effective information management programs?

2. How are businesses using technology to provide security for consumer information that they maintain? What progress has been made in this area since the FTC's May 2002 Consumer Information Security Workshop?

- What types of technologies are available or under development to help businesses provide security for customer information?
- Which of these technologies are businesses using, which are not being use, and why?
- Is there any empirical data showing which technologies businesses are using and why?
- What are the costs and benefits of implementing these technologies?
- Do different types of information and information practices warrant different types of security protection?
- Are their security tools that are low in cost and easy-to-use, particularly for small businesses? How can we raise awareness of security issues among small businesses?
- Do security tools work out-of-the-box? What can businesses that do not have dedicated security personnel do to protect consumer information?
- Are their limits to technology's ability to protect consumer information? What role do people, policies, and organizational structure play in implementing effective safeguards programs?
- How are U.S. agencies working with international organizations like OECD and APEC to provide security guidance for businesses?
- What additional steps can businesses take to help create a ''culture of security?''

Requests to Participate as a Panelist in the Workshop

Parties seeking to participate as panelists in the workshop must notify the FTC in writing of their interest in participating on or before Wednesday, March 26, 2003, either by mail to the Security of the FTC or by e-mail to *techworkshop@ftc.gov*. Requests to participate as a panelist should be captioned ''Technology Workshop—Request to Participate, PO34808.''

Parties are asked to include in their requests a statement setting forth their expertise in or knowledge of the issues on which the workshop will focus and their contact information, including a telephone number, facsimile number, and e-mail address (if available), to enable the FTC to notify them if they are selected. An original and two copies of each document should be submitted. Panelists will be notified on or before Wednesday, April 9. 2003, whether they have been selected.

Using the following criteria, FTC staff will select a limited number of panelists to participate in the workshop. The number of parties selected will not be so large as to inhibit effective discussion among them.

1. The party has expertise in or knowledge of the issues that are the focus of the workshop.
2. The party's participation would promote a balance of interests being represented at the workshop.
3. The party has been designated by one or more interested parties (who timely file requests to participate) as a party who shares group interests with the designator(s).

In addition, there will be time during the workshop for those not serving as panelists to ask questions.

Form and Availability of Comments

The FTC requests that interested parties submit written comments on the above questions to foster greater understanding of the issues. Especially useful are any studies, surveys, research, and empirical data. Comments should be captioned ''Technology Workshop—Comment, PO34808,'' and must be filed on or before Wednesday, April 23, 2003.

Parties sending written comments should submit an original and two copies of each document. To enable prompt review and public access, paper submissions should include a version on diskette in PDF, ASCII, WordPerfect, or Microsoft Word format. Diskettes should be labeled with the name of the party, and the name and version of the word processing program used to create the document. Alternatively, comments may be emailed to *techworkshop@ftc.gov.*

Written comments will be available for public inspection in accordance with the Freedom of Information Act, 5 U.S.C. 552, and FTC regulations, 16 CFR part 4.9, Monday through Friday between the hours of 8:30 a.m. and 5 p.m. at the Public Reference Room 130, Federal Trade Commission, 600 Pennsylvania Avenue, NW., Washington, DC 20580. This notice and, to the extent technologically possible, all comments will also be posted on the FTC Web site at *http://www.ftc.gov/techworkshop.*

By direction of the Commission.

Donald S. Clark,

Secretary.

[FR Doc. 03–4502 Filed 2–25–03; 8:45 am]

BILLING CODE 6750–01–M

GENERAL ACCOUNTING OFFICE

[Document No. JFMIP–SR–03–01]

Joint Financial Management Improvement Program (JFMIP)—Federal Financial Management System Requirements (FFMSR)

AGENCY: Joint Financial Management Improvement Program (JFMIP).

ACTION: Notice of document finalization and posting.

SUMMARY: The JFMIP is seeking announcement of document finalization and posting for the ''JFMIP Revenue System Requirements Document'' dated January 2003. The document is the first Federal Financial Management System Requirements (FFMSR) document to address standard financial requirements for Federal revenue systems. The document is intended to assist agencies when developing, improving or evaluating revenue systems. It provides the baseline functionality that agency systems must have to support agency missions and comply with laws and regulations. This document augments the existing body of FFMSR that define financial system functional requirements that are used in evaluating compliance with the Federal Financial Management Improvement Act (FFMIA) of 1996.

DATES: For release as soon as possible.

ADDRESSES: The document is available on the JFMIP Web site: *www.jfmip.gov.*

FOR FURTHER INFORMATION CONTACT: Daniel Costello at *daniel.costello@gsa.gov.*

SUPPLEMENTARY INFORMATION: The FFMIA of 1996 mandated that agencies implement and maintain systems that comply substantially with FFMSR, applicable Federal accounting standards, and the U.S. Government Standard General Ledger at the transaction level. The FFMIA statute codified the JFMIP financial system requirements documents as a key benchmark that agency systems must meet to substantially comply with systems requirements provisions under FFMIA. To support the provisions outlined in the FFMIA, the JFMIP is updating obsolete requirements documents and publishing additional requirements documents.

An open house is scheduled for February 27, 2003, from 1 to 3 pm in room 5141A of the main GSA building, to provide additional information on the document. The name, organization, telephone number, and e-mail address for attendees should be e-mailed to *daniel.costello@gsa.gov* to register.

Karen Cleary Alderman,

Executive Director, Joint Financial Management Improvement Program.

[FR Doc. 03–4528 Filed 2–25–03; 8:45 am]

BILLING CODE 1610–02–M

DEPARTMENT OF HEALTH AND HUMAN SERVICES

Agency for Healthcare Research and Quality

Notice of Meeting

In accordance with section 10(d) of the Federal Advisory Committee Act (5 U.S.C., Appendix 2), announcement is made of a Health Care Policy and Research Special Emphasis Panel (SEP) meeting.

The Health Care Policy and Research Special Emphasis Panel is a group of experts in fields related to health care research who are invited by the Agency for Healthcare Research and Quality (AHRQ), and agree to be available, to conduct on an as needed basis, scientific reviews of applications for AHRQ support. Individual members of the Panel do not attend regularly-scheduled meetings and do not serve for fixed terms or long periods of time. Rather, they are asked to participate in particular review meetings which require their type of expertise.

Substantial segments of the upcoming SEP meeting listed below will be closed to the public in accordance with the Federal Advisory Committee Act, section 10(d) of 5 U.S.C., Appendix 2 and 5 U.S.C. 552b(c)(6). Grant applications for AHRQ National Research Service Award Individual Research Training Grant (F32) Awards are to be reviewed and discussed at this meeting. These discussions are likely to reveal personal information concerning individuals associated with the applications. This information is exempt from mandatory disclosure under the above-cited statutes.

SEP Meeting on: AHRQ National Research Service Award Individual Research Training Grant (F32) Awards.

Date: March 26, 2003 (Open on March 26 from 1 p.m. to 1:10 p.m. and closed for remainder of the teleconference meeting).

Place: Agency for Healthcare Research and Quality, 2101 East Jefferson Street, 4th Floor, ORREP, 4W5, Division of Scientific Review, Rockville, Maryland 20852.

Contact Person: Anyone wishing to obtain a roster of members, agenda or minutes of the nonconfidential portions of this meeting should contact Mrs. Bonnie Campbell, Committee Management Officer, Office of Research Review, Education and Policy, AHRQ, 2101 East Jefferson Street, Suite 400, Rockville, Maryland 20852, Telephone (301) 594–1846.

Agenda items for this meeting are subject to change as priorities dictate.

Dated: February 19, 2003.

Carolyn M. Clancy,

Director.

[FR Doc. 03–4531 Filed 2–25–03; 8:45 am]

BILLING CODE 4160–90–M

DEPARTMENT OF HEALTH AND HUMAN SERVICES

Food and Drug Administration

[Docket No. 03N–0038]

Agency Information Collection Activities; Proposed Collection; Comment Request; Medical Device User Fee Cover Sheet; Form FDA 3601

AGENCY: Food and Drug Administration, HHS.

ACTION: Notice.

SUMMARY: The Food and Drug Administration (FDA) is announcing an opportunity for public comment on the proposed collection of certain information by the agency. Under the Paperwork Reduction Act of 1995 (the PRA), Federal agencies are required to publish notice in the **Federal Register** concerning each proposed collection of information, and to allow 60 days for public comment in response to the notice. This notice solicits comments concerning Form FDA 3601 entitled ''Medical Device User Fee Cover Sheet,'' which must be submitted along with certain medical device product applications, supplements, and fee payment of those applications.

DATES: Submit written or electronic comments on the collection of information by April 28, 2003.

ADDRESSES: Submit electronic comments on the collection of information to http://www.accessdata.fda.gov/scripts/oc/dockets/edockethome.cfm. Submit written comments concerning the collection of information to the Dockets Management Branch (HFA–305), Food and Drug Administration, 5630 Fishers Lane, rm. 1061, Rockville, MD 20852. All comments should be identified with the docket number found in brackets in the heading of this document.

FOR FURTHER INFORMATION CONTACT: Peggy Robbins, Office of Information Resources Management (HFA–250), Food and Drug Administration, 5600 Fishers Lane, Rockville, MD 20857, 301–827–1223.

SUPPLEMENTARY INFORMATION: Under the PRA (44 U.S.C. 3501–3520), Federal agencies must obtain approval from the Office of Management and Budget (OMB) for each collection of information they conduct or sponsor. ''Collection of information'' is defined in 44 U.S.C. 3502(3) and 5 CFR 1320.3(c) and includes agency requests or requirements that members of the public submit reports, keep records, or provide information to a third party. Section 3506(c)(2)(A) of the PRA (44 U.S.C. 3506(c)(2)(A)) requires Federal agencies to provide a 60-day notice in the **Federal Register** concerning each proposed collection of information, including each proposed extension of an existing collection of information, before submitting the collection to OMB for approval. To comply with this requirement, FDA is publishing notice of the proposed collection of information set forth in this document.

With respect to the following collection of information, FDA invites comments on: (1) Whether the proposed collection of information is necessary for the proper performance of FDA's functions, including whether the information will have practical utility; (2) the accuracy of FDA's estimate of the burden of the proposed collection of information, including the validity of the methodology and assumptions used; (3) ways to enhance the quality, utility, and clarity of the information to be collected; and (4) ways to minimize the burden of the collection of information on respondents, including through the use of automated collection techniques when appropriate, and other forms of information technology.

Medical Device User Fee Cover Sheet; Form FDA 3601

The Federal Food, Drug, and Cosmetic Act (the act), as amended by the Medical Device User Fee and Modernization Act of 2002 (MDUFMA) (Public Law 107–250), authorizes FDA to collect user fees for certain medical device applications. Under this authority, companies pay a fee for certain new medical device applications or supplements submitted to the agency for review. Because the submission of user fees concurrently with applications and supplements is required, the review of an application cannot begin until the fee is submitted. Form FDA 3601, the ''Medical Device User Fee Cover Sheet,'' is designed to provide the minimum necessary information to determine whether a fee is required for review of an application, to determine the amount of the fee required, and to account for and track user fees. The form provides a cross-reference of the fees submitted for an application with the actual application by using a unique number tracking system. The information collected is used by FDA's Center for Devices and Radiological Health (CDRH) and Center for Biologics Evaluation and Research (CBER) to initiate the administrative screening of new medical device applications and supplemental applications.

Respondents to this collection of information are device manufacturers. Based on FDA's database system, there are an estimated 5,000 manufacturers of products subject to MDUFMA. However, not all manufacturers will have any submissions in a given year and some may have multiple submissions. The total number of annual responses is based on the number of submissions received by FDA in fiscal year 2002. CDRH estimates 5,000 annual responses that include the following: 50 premarket approval applications, 4,400 premarket notifications, 30 modular premarket applications, 1 product development protocol, 1 premarket report, 20 panel track supplements, 150 real-time supplements, and 348 180-day supplements. CBER estimates 50 annual responses that include the following: 2 premarket approval applications, 3 biologics license applications, 30 premarket notifications, 10 modular premarket applications, and 5 180-day supplements. The estimated hours per response are based on past FDA experience with the various submissions, and range from 5 to 30 minutes. The hours per response are based on the average of these estimates.

TABLE 1.—ESTIMATED ANNUAL REPORTING BURDEN[1]

Form	No. of Respondents	Annual Frequency per Response	Total Annual Responses	Hours per Response	Total Hours
FDA 3601	5,000	1	5,000	.30	1,500

[1] There are no capital costs or operating and maintenance costs associated with this collection of information.

Dated: February 14, 2003.

William K. Hubbard,

Associate Commissioner for Policy and Planning.

[FR Doc. 03–4493 Filed 2–25–03; 8:45 am]

BILLING CODE 4160–01–S

DEPARTMENT OF HEALTH AND HUMAN SERVICES

Food and Drug Administration

[Docket No. 00N–1219]

Delmont Laboratories, Inc.; Opportunity for Hearing on a Proposal to Revoke U.S. License No. 299

AGENCY: Food and Drug Administration, HHS.

ACTION: Notice.

SUMMARY: The Food and Drug Administration (FDA) is announcing an opportunity for hearing on a proposal to revoke the biologics license (U.S. License No. 299) issued to Delmont Laboratories, Inc. (Delmont), for Polyvalent Bacterial Antigens with ''no U.S. Standard of Potency'' (Staphage Lysate). The proposed revocation is based on FDA's proposed reclassification of this product in Category II (unsafe, ineffective, or misbranded), based on the recommendations of the Vaccines and Related Biological Products Advisory Committee (VRBPAC).

DATES: Delmont Laboratories, Inc., may submit written or electronic requests for a hearing by March 28, 2003, and any data and information justifying a hearing by April 28, 2003. Other interested persons may submit written or electronic comments on the proposed revocation by April 28, 2003.

ADDRESSES: Submit written requests for a hearing, any data and information justifying a hearing, and any written comments on the proposed revocation to the Dockets Management Branch (HFA–305), Food and Drug Administration, 5630 Fishers Lane, rm. 1061, Rockville, MD 20852. Submit electronic requests or comments to http://www.fda.gov/dockets/ecomments.

FOR FURTHER INFORMATION CONTACT: Astrid L. Szeto, Center for Biologics Evaluation and Research (HFM–17), Food and Drug Administration, 1401 Rockville Pike, Rockville, MD 20852–1448, 301–827–6210.

SUPPLEMENTARY INFORMATION: In the **Federal Register** of May 15, 2000 (65 FR 31003), FDA issued a proposed order to reclassify certain Category IIIA (remaining on the market pending further studies in support of effectiveness) bacterial vaccines and related biological products into Category I (safe, effective, and not misbranded) or Category II (unsafe, ineffective, or misbranded). This action was taken under the reclassification review procedures in § 601.26 (21 CFR 601.26), and was based on the findings and recommendations of the VRBPAC and the Panel on Review of Allergenic Extracts (the Allergenics Panel). The proposed order also announced our intent to revoke the biologics licenses for those bacterial vaccines and related products proposed for reclassification in Category II.

Based on VRBPAC's recommendations, FDA proposed that bacterial vaccines and toxoids with standards of potency be classified into two separate categories based upon their use as either a primary immunogen or as a booster. FDA further proposed that bacterial vaccines and related biological products with ''no U.S. standards of potency'' be classified into Category II for their labeled indications based on either the VRBPAC's or the Allergenics Panel's recommendations. Five manufacturers of Category IIIA products were subject to the proposed order, as listed in the following table:

TABLE 1—CATEGORY IIIA PRODUCTS PROPOSED BY FDA FOR RECLASSIFICATION INTO CATEGORY II AS A PRIMARY IMMUNOGEN OR FOR ALL LABELED INDICATIONS

Manufacturer/License Number	Product(s)	Proposed Category II Indication
Aventis Pasteur, Inc., No. 1277	Tetanus Toxoid (fluid)	Primary Immunogen
BioPort Corporation, No. 1260	Diphtheria and Tetanus Toxoids Adsorbed	Primary Immunogen
Wyeth Laboratories, Inc., No. 3	Tetanus and Diphtheria Toxoids Adsorbed (Adult Use)	Primary Immunogen
Delmont Laboratories, Inc., No. 299	Polyvalent Bacterial Antigens with ''No U.S. Standard of Potency'' (Staphage Lysate)	All Labeled Indications
Hollister-Stier Laboratories LLC, No. 1272 (1)	Polyvalent Bacterial Vaccines with ''No U.S. Standard of Potency'' (Bacterial Vaccines Mixed Respiratory (MRV or MRVI, Bacterial Vaccines for Treatment, Special Mixtures)	All Labeled Indications

[1] As described in the proposed order, this product was reviewed by the Allergenics Panel. The remaining products in this table were reviewed by the VRBPAC.

FDA also proposed that the bacterial vaccines with U.S. standards of potency recommended for classification into Category II as a primary immunogen be placed into Category I for use as a booster immunogen. Manufacturers who intended to market their products for use as a booster immunogen needed to submit supplements for changes to the container and package labels and the package insert, to include the statement, ''For Booster Use Only''.

Three of the five manufacturers submitted requests to voluntarily revoke their licenses. Accordingly, FDA revoked the licenses for: (1) Polyvalent Bacterial Vaccines with ''no U.S. Standard of Potency'' (Bacterial Vaccines Mixed Respiratory), Hollister-Stier Laboratories, U.S. license No. 1272, effective August 3, 2000 (66 FR

29148, May 29, 2001); (2) Diphtheria and Tetanus Toxoids Adsorbed and Tetanus Toxoids Adsorbed, BioPort Corporation, U.S. license No. 1260, effective November 20, 2000 (66 FR 29148, May 29, 2001); and (3) Tetanus and Diphtheria Toxoids Adsorbed (for Adult Use), Wyeth Laboratories, Inc., U.S. license No. 3, effective May 30, 2002.

On January 18, 2002, we approved a license supplement for Aventis Pasteur, Inc.'s, Tetanus Toxoid fluid. In this supplement, Aventis Pasteur, Inc., requested that their license for Tetanus Toxoid fluid be amended to revoke the primary immunization indication and maintain the booster use only indication. In addition, the supplement included updated labeling for the Tetanus Toxoid fluid product stating that the product was for ''Booster Use Only'', as specified in the proposed order.

Comments on Proposed Reclassification

Polyvalent Bacterial Antigens with ''No U.S. Standard of Potency'' [Staphage Lysate (SPL)], Delmont Laboratories, Inc., U.S. License No. 299

On August 9, 2000, Delmont submitted a written comment on the proposed order opposing the proposed Category II reclassification of its product. Delmont proposed, instead, reclassification into Category I and submitted information in support of its proposal, including an SPL clinical trial summary dated February 28, 1994, an English translation of a clinical study report for a study performed in the Czech Republic, and an abstract of a 1994 in vitro study performed by Delmont. We have carefully considered the information provided by Delmont, and find that it does not support a reclassification of SPL into Category I. A discussion of the studies included in Delmont's submission follows.

The February 28, 1994, clinical trial summary contained data from two human clinical studies. The first study in the submission was a prospective, double blind, placebo controlled study of the efficacy of SPL for the treatment of Hidradenitis Suppurativa (HS). The clinical trial summary stated that, ''under the conditions of the study, SPL was not demonstrated to be effective in the treatment of HS,'' and that no significant differences between treatment groups (SPL, placebo) or between clinical centers ''were found in any of the efficacy analyses for any of the parameters analyzed.'' Delmont stated in its written comment on the proposed order that a data reanalysis provided by an independent third party engaged by Delmont demonstrated ''approximately two times greater reductions from baseline in total score for SPL treated patients than for placebo treated patients'' and that SPL showed a ''trend among the more severely affected patients for the change from baseline to last visit.'' However, the reanalysis of the data was performed after the patient data were unblinded. In addition, the method of efficacy assessment was changed from the initial blinded and controlled study, and a subset analysis of a selected subgroup of patients was performed in order to reach these conclusions. There was no statistically significant difference between the SPL and placebo treatment groups after the reanalysis was performed. The data are inadequate to support a reclassification of SPL from Category II to Category I.

The second study included in the 1994 clinical trial summary was an open label (unblinded) comparative study between SPL and 2 similar products, STAVA and POLYSTAFANA, not licensed in the United States. The study was performed in the Czech Republic and included patients with staphylococcal diseases of various types. An English translation of the study report was included in Delmont's submission. The study report contained several deficiencies, such as: No patient recruitment details with respect to the diagnoses of various staphylococcal infections, no detailed explanations of patient inclusion or exclusion criteria, no adequate control group, no description of patient randomization procedures (if performed), no explanation of how patients were reassigned to treatment groups after clinics refused to continue administering the POLYSTAFANA, no information on treatment compliance or individual dose regimens, no clinical descriptions or associated clinical measurements for the endpoints of ''cured,'' ''lasting stabilization,'' ''improved,'' or ''no effect,'' no statistical analysis performed (only observed cure rates were reported), and no reporting of individual adverse events. These deficiencies are inconsistent with generally accepted standards of clinical trial design and performance. Therefore, this clinical study is also inadequate to support reclassification of SPL from Category II to Category I.

Delmont also included an abstract of an in vitro study performed in two human cell lines. The study authors found that human cell cultures secreted gamma interferon, interleukin 1, interleukin 2, and tumor necrosis factor when exposed to SPL. Delmont interprets the study to suggest that SPL ''may stimulate the production of immunocompetent cells, triggering immune responses that might have clinical significance in certain diseases.'' However, the data provided in the abstract are limited, and deficiencies in the data exist (e.g., lack of information on some positive and negative control results). While in vitro studies are frequently used to study the biological mechanisms of a product, they are not supportive of human efficacy in the absence of adequate and well-controlled clinical trials. Therefore, the limited data contained in Delmont's abstract are not adequate to support a reclassification of SPL from Category II to Category I.

Delmont submitted no other data or information to support a reclassification of SPL to Category I or to preclude FDA's reclassification of this product to Category II.

Notice of Opportunity for Hearing

In accordance with 21 CFR 601.5(b) and 21 CFR 12.21(b), FDA is offering an opportunity for hearing on its proposal to revoke the biologics license, U.S. License No. 299, issued to Delmont Laboratories, Inc., for Polyvalent Bacterial Antigens with ''no U.S. Standard of Potency'' (Staphage Lysate). A copy of the August 9, 2000, written comment is on file with the Dockets Management Branch (see **ADDRESSES**) under the docket number found in brackets in the heading of this notice. The document is available for public examination in the Dockets Management Branch between 9 a.m. and 4 p.m., Monday through Friday. Delmont may submit a written or electronic request for a hearing to the Dockets Management Branch by March 28, 2003, and any data and information justifying a hearing must be submitted by April 28, 2003 (21 CFR 12.22(b)(1)). Other interested persons may submit comments on the proposed revocation by April 28, 2003.

FDA procedures and requirements governing a notice of opportunity for a hearing, notice of appearance and request for hearing, grant or denial of hearing, and submission of data and information to justify a hearing on a proposed revocation of a license are contained in part 12 (21 CFR part 12) and 21 CFR part 601. In requesting a hearing, a person must submit to FDA's Dockets Management Branch objections and a request for a hearing on each objection, along with a detailed description and analysis of the factual information to be presented in support of each objection, as provided in § 12.22. A deficient request or objection

will be returned; however, the deficient submission may be supplemented and subsequently filed if submitted within the 30-day time period (§ 12.22(c)). The objections should identify the specific fact or facts that are genuine, substantial, and in dispute (§ 12.24(b)(1)). Mere allegations or denials are not enough to obtain a hearing (§ 12.24(b)(2)). The Commissioner of Food and Drugs (the Commissioner) will deny the hearing request if the Commissioner concludes that the data and information submitted are insufficient to justify the factual determination urged, even if accurate (§ 12.24(b)(3)).

Two copies of any submissions are to be provided to FDA except that individuals may submit one copy. Submissions are to be identified with the docket number found in brackets in the heading of this document. Submissions, except for data and information prohibited from public disclosure under 21 U.S.C. 331(j) or 18 U.S.C. 1905, may be examined in the Dockets Management Branch (see **ADDRESSES**) between 9 a.m. and 4 p.m., Monday through Friday.

This notice is issued under section 351 of the Public Health Service Act (42 U.S.C. 262) and sections 201, 501, 502, 505, 701 of the Federal Food, Drug, and Cosmetic Act (21 U.S.C. 321, 351, 352, 355, and 371), and under authority delegated to the Commissioner (21 CFR 5.10) and redelegated to the Director, Center for Biologics Evaluation and Research (21 CFR 5.202).

Dated: February 4, 2003.

Mark Elengold,

Deputy Director for Operations, Center for Biologics Evaluation and Research.

[FR Doc. 03–4491 Filed 2–25–03; 8:45 am]

BILLING CODE 4160–01–S

DEPARTMENT OF HEALTH AND HUMAN SERVICES

Food and Drug Administration

Advisory Committee on Special Studies Relating to the Possible Long-Term Health Effects of Phenoxy Herbicides and Contaminants (Ranch Hand Advisory Committee); Notice of Meeting

AGENCY: Food and Drug Administration, HHS.

ACTION: Notice.

This notice announces a forthcoming meeting of a public advisory committee of the Department of Health and Human Services. At least one portion of the meeting will be closed to the public.

Name of Committee: Advisory Committee on Special Studies Relating to the Possible Long-Term Health Effects of Phenoxy Herbicides and Contaminants (Ranch Hand Advisory Committee).

General Function of the Committee: The committee advises the Secretary and the Assistant Secretary for Health concerning its oversight of the conduct of the Ranch Hand Study by the U.S. Air Force and provides scientific oversight of the Department of Veterans Affairs (VA) Army Chemical Corps Vietnam Veterans Health Study, and other studies in which the Secretary or the Assistant Secretary for Health believes involvement by the committee is desirable.

Date and Time: The meeting will be held on March 13, 2003, 8 a.m. to 5:30 p.m.

Location: San Diego Marriott La Jolla, 4240 La Jolla Village Dr., Newport-Irvine Room, La Jolla, CA 92037.

Contact Person: Leonard M. Schechtman, National Center for Toxicological Research (HFT–10), Food and Drug Administration, 5600 Fishers Lane, rm. 16–85, Rockville, MD 20857, 301–827–6696, or FDA Advisory Committee Information Line, 1–800–741–8138 (301–443–0572 in the Washington, DC area), code 12560. Please call the Information Line for up-to-date information on this meeting.

Agenda: The Air Force will present information on the following: Personnel changes and contract actions; cancer incidence; mortality, review of latest findings; diabetes, summarize the latest analysis of the insulin sensitivity study; hypertension, summarize the latest analysis, including the skin exposure index results; thyroid, review latest results; statistics on study compliance to cycle 6; data release—the latest results on consent for future use of data; and study shutdown and transfer of data.

Procedure: On March 13, 2003, from 8 a.m. to 12 noon, and from 3 p.m. to 5:30 p.m. the meeting is open to the public. Interested persons may present data, information, or views, orally or in writing, on issues pending before the committee. Written submissions may be made to the contact person by March 5, 2003. Oral presentations from the public will be scheduled between approximately 11 a.m. to 12 noon. Time allotted for each presentation may be limited. Those desiring to make formal oral presentations should notify the contact person before March 5, 2003, and submit a brief statement of the general nature of the evidence or arguments they wish to present, the names and addresses of proposed participants, and an indication of the approximate time requested to make their presentation.

Closed Committee Deliberations: On March 13, 2003, from approximately 1 p.m. to 3 p.m., the meeting will be closed to permit discussion where disclosure would constitute a clearly unwarranted invasion of personal privacy (5 U.S.C. 552b(c)(6)). The closed portion of the meeting will allow for discussion between the committee members and study participants currently undergoing health assessments, pertaining to their participation in the Ranch Hand Study.

Persons attending FDA's advisory committee meetings are advised that the agency is not responsible for providing access to electrical outlets.

FDA welcomes the attendance of the public at its advisory committee meetings and will make every effort to accommodate persons with physical disabilities or special needs. If you require special accommodations due to a disability, please contact Leonard M. Schechtman at least 7 days in advance of the meeting.

Notice of this meeting is given under the Federal Advisory Committee Act (5 U.S.C. app. 2).

Dated: February 14, 2003.

Linda Arey Skladany,

Associate Commissioner for External Relations.

[FR Doc. 03–4492 Filed 2–25–03; 8:45 am]

BILLING CODE 4160–01–S

DEPARTMENT OF HOUSING AND URBAN DEVELOPMENT

[Docket No. FR–4815–N–07]

Notice of Submission of Proposed Information Collection to OMB: Community Outreach Partnership Center Program (COPC)

AGENCY: Office of the Chief Information Officer, HUD.

ACTION: Notice.

SUMMARY: The proposed information collection requirement described below has been submitted to the Office of Management and Budget (OMB) for review, as required by the Paperwork Reduction Act. The Department is soliciting public comments on the subject proposal.

DATES: Comments Due Date: March 28, 2003.

ADDRESSES: Interested persons are invited to submit comments regarding this proposal. Comments should refer to the proposal by name and/or OMB approval number (2528–0180) and should be sent to: Lauren Wittenberg,

OMB Desk Officer, Office of Management and Budget, Room 10235, New Executive Office Building, Washington, DC 20503; Fax number (202) 395–6974; E-mail *Lauren__Wittenberg@omb.eop.gov.*

FOR FURTHER INFORMATION CONTACT: Wayne Eddins, Reports Management Officer, AYO, Department of Housing and Urban Development, 451 Seventh Street, SW., Washington, DC 20410; e-mail *Wayne__Eddins@HUD.gov;* telephone (202) 708–2374. This is not a toll-free number. Copies of the proposed forms and other available documents submitted to OMB may be obtained from Mr. Eddins.

SUPPLEMENTARY INFORMATION: The Department has submitted the proposal for the collection of information, as described below, to OMB for review, as required by the Paperwork Reduction Act (44 U.S.C. chapter 35). The Notice lists the following information: (1) The title of the information collection proposal; (2) the office of the agency to collect the information; (3) the OMB approval number, if applicable; (4) the description of the need for the information and its proposed use; (5) the agency form number, if applicable; (6) what members of the public will be affected by the proposal; (7) how frequently information submissions will be required; (8) an estimate of the total number of hours needed to prepare the information submission including number of respondents, frequency of response, and hours of response; (9) whether the proposal is new, an extension, reinstatement, or revision of an information collection requirement; and (10) the name and telephone number of an agency official familiar with the proposal and of the OMB Desk Officer for the Department.

This notice also lists the following information:

Title of Proposal: Community Outreach Partnership Center Program (COPC).

OMB Approval Number: 2528–0180.

Form Numbers: HUD–30001, HUD–30002, HUD–30003, HUD–30011, HUD–30012, Grant Forms.

Description of the Need for the Information and its Proposed Use: Grants are made to colleges and universities to establish and operate Community Outreach Partnership Centers to conduct research and outreach activities that address the problems of urban areas.

Respondents: Individuals or households, business or other for-profit, not-for-profit institutions.

Frequency of Submission: On occasion, semi-annually.

	Number of respondents	x	Annual responses	x	Hours per response	=	Burden hours
Reporting Burden	160		1.625		55		14,400

Total Estimated Burden Hours: 14,400.

Status: Revision of a currently approved collection.

Authority: Section 3507 of the Paperwork Reduction Act of 1995, 44 U.S.C. 35, as amended.

Dated: February 20, 2003.

Wayne Eddins,

Departmental Reports Management Officer, Office of the Chief Information Officer.

[FR Doc. 03–4447 Filed 2–25–03; 8:45 am]

BILLING CODE 4210–72–P

DEPARTMENT OF HOUSING AND URBAN DEVELOPMENT

[Docket No. FR–4817–N–01]

Notice of Proposed Information Collection for Public Comments for the Family Self-Sufficiency Program

AGENCY: Office of the Assistant Secretary for Public and Indian Housing, HUD.

ACTION: Notice.

SUMMARY: The proposed information collection requirement described below will be submitted to the Office of Management and Budget (OMB) for review, as required by the Paperwork Reduction Act. The Department is soliciting public comments on the subject proposal.

DATES: *Comments Due Date:* May 27, 2003.

ADDRESSES: Interested persons are invited to submit comments regarding this proposal. Comments should refer to the proposal by name and/or OMB Control number and should be sent to: Mildred M. Hamman, Reports Liaison Officer, Public and Indian Housing, Department of Housing and Urban Development, 451 7th Street, SW., Room 4249, Washington, DC 20410–5000.

FOR FURTHER INFORMATION CONTACT: Mildred M. Hamman, (202) 708–0614, extension 4128. (This is not a toll-free number.)

SUPPLEMENTARY INFORMATION: The Department will submit the proposed information collection to OMB for review, as required by the Paperwork Reduction Act of 1995 (44 U.S.C. chapter 35, as amended).

This notice is soliciting comments from members of the public and affected agencies concerning the proposed collection of information to: (1) Evaluate whether the proposed collection of information is necessary for the proper performance of the functions of the agency, including whether the information will have practical utility; (2) evaluate the accuracy of the agency's estimate of the burden of the proposed collection of information; (3) enhance the quality, utility, and clarity of the information to be collected; and (4) minimize the burden of the collection of information on those who are to respond, including through the use of appropriate automated collection techniques or other forms of information technology; *e.g.*, permitting electronic submission of responses.

This notice also lists the following information:

Title of Proposal: Family Self-Sufficiency Program (FSS).

OMB Control Number: 2577–0178.

Description of the need for the information and proposed use: The Family Self-Sufficiency Program, which was established in the National Affordable Housing Act of 1990, promotes the development of local strategies that coordinate the use of public housing assistance and assistance under the Section 8 rental certificate and voucher programs (now known as the Housing Choice Voucher Program) with public and private resources to enable eligible families to achieve economic independence and self-sufficiency. Housing agencies enter into a Contract of Participation with each eligible family that opts to participate in the program; consult with local officials to develop an Action Plan; and report annually to HUD on implementation of the FSS program.

Agency form numbers, if applicable: Form HUD–52650 and HUD–52652.

Members of affected public: Individuals or households, public housing agencies, State or local government.

Estimation of the total number of hours needed to prepare the information collection including number of

respondents, frequency of response, and hours of response: Plan—50 respondents annually, Forms HUD–52650 (10 times a year) and HUD–52652 (50 times a year), 39,000 hours total reporting burden.

Status of the proposed information collection: Extension.

Authority: Sec. 3506 of the Paperwork Reduction Act of 1995, 44 U.S.C. chapter 35, as amended.

Dated: February 19, 2003.

Michael Liu,

Assistant Secretary for Public and Indian Housing.

BILLING CODE 4210–33–P

Family Self-Sufficiency (FSS) Program Contract of Participation

Section 8, Public Housing and Indian Housing Programs

U.S. Department of Housing and Urban Development
Office of Public and Indian Housing

OMB Approval No. 2577-0178
(exp. 05/31/2003)

This Contract of Participation for the Family Self-Sufficiency (FSS) Program is between _____

_____, Housing Agency (HA), and

_____, head of the FSS family.

The FSS family includes everyone in the household, and is referred to in this contract as "family".

Type of FSS Program.

The family is a participant in the:(Check only one)

☐ Section 8 Rental Certificate or Rental Voucher FSS Program

☐ Public Housing FSS Program

☐ Indian Housing FSS Program

Purpose of Contract

The purpose of this contract is to state the rights and responsibilities of the family and the HA, the resources and supportive services to be provided to the family, and the activities to be completed by the family.

Term of Contract

This contract will be effective on _____.

This contract will expire on _____.

The HA can extend the term of the contract up to 2 years if the family gives the HA a written request for an extension and the HA finds that good cause exists for the extension.

Resources and Supportive Services

During the term of the contract, the HA will try to provide the resources and services listed in the individual training and services plans. If the resources and services are not available, the HA will try to substitute other resources and services. However, the HA has no liability to the family if the resources and services are not provided.

FSS Escrow Account

The HA will establish an FSS escrow account for the family. A portion of the increases in the family's rent because of increases in earned income will be credited to the FSS escrow account in accordance with HUD requirements.

Listed below are the family's annual income, earned income, and family rent when the family begins the FSS program. These amounts will be used to determine the amount credited to the family's FSS escrow account because of future increases in earned income.

Annual Income $ _____

Earned Income $ _____

Family Rent (Total Tenant Payment or, for rental vouchers, 30% of monthly Adjusted Income)$ _____

The HA will invest the FSS escrow account funds in HUD-approved investments.

The HA will give the family a report on the amount in the family's FSS escrow account at least once a year.

If the family is participating in the Section 8 program and moves outside the HA's jurisdiction under Section 8 portability procedures, the HA may transfer the balance of the family's FSS escrow account to another HA.

Withdrawal of Funds from FSS Escrow Account

The HA may permit the family to withdraw funds from the FSS escrow account before completion of the contract if the family has completed specific interim goals, designated by the HA, and needs some of the FSS escrow account funds to complete the contract (example: to pay for school costs).

The HA will pay the head of the family the amount in the family's FSS escrow account, less any amount owed to the HA, when:

(1) the HA determines that the family has completed this contract, and,

(2) at the time of contract completion, the head of the family provides written certification to the HA that no member of the family is receiving welfare assistance. Welfare assistance means income assistance from Federal or state welfare programs including AFDC, SSI that is subject to an income eligibility test, Medicaid, food stamps, and general assistance. Welfare assistance does not include transitional Medicaid or child care for JOBs participants or SSI payments to guardians of disabled children.

If the head of the family leaves the assisted unit, the remaining family members may, after consulting the HA, name another family member to receive the FSS escrow account funds.

Loss of FSS Escrow Account

The family will not receive the funds in its FSS escrow account if:

(1) the contract of participation is terminated,

(2) the contract of participation is declared null and void; or

(3) the family has not met its family responsibilities within the times specified as stated in this contract.

Family Responsibilities

The head of the family must:

- Seek and maintain suitable employment after completion of the job training programs listed in the individual training and services plan. The HA, after consulting with the head of the family, will determine what employment is suitable based on the skills, education, and job training of that individual and available job opportunities in the area.

The head of the family and those family members who have decided, with HA agreement, to execute an individual training and services plan, must:

- Complete the activities within the dates listed in each individual training and services plan.

- Provide the HA and HUD with information about the family's participation in the FSS program in order to help the HA and HUD evaluate the FSS program. This could include information regarding employment, job interviews, training, educational attendance, and other FSS services and activities.

All family members must:

- Comply with the terms of the lease.
- If receiving welfare assistance, become independent of welfare assistance and remain independent of welfare assistance for at least 12 consecutive months before the contract expires.
- If participating in the Section 8 program, live in the jurisdiction of the HA that enrolled the family in the FSS program at least 12 months from the effective date of this contract and comply with the family obligations under the Section 8 rental certificate or rental voucher program.

Corrective Actions for Failure to meet Family Responsibilities

If any member of the family does not meet his or her responsibilities under this contract, the family will not receive the money in its FSS escrow account and the HA may:

(1) stop supportive services for the family,

(2) terminate the family's participation in the FSS program, and

(3) if the family is participating in the rental certificate or rental voucher program, terminate the Section 8 assistance, when allowed by HUD requirements.

HA Responsibilities

- Attempt to obtain commitments from public and private sources for supportive services for families.
- Establish an FSS escrow account for the family, invest the escrow account funds, and give the family a report on the amount in the FSS escrow account at least once a year.
- Determine which, if any, interim goals must be completed before any FSS escrow funds may be paid to the family; and pay a portion of the FSS escrow account to the family if the HA determines that the family has met these specific interim goals and needs the funds from the FSS escrow account to complete the contract.
- Determine if the family has completed this contract.
- Pay the family the amount in its FSS escrow account, if the family has completed the contract and the head of the family has provided written certification that no member of the family is receiving welfare assistance.

Completion of the Contract of Participation

Completion of the contract occurs when the HA determines that:

(1) the family has fulfilled all of its responsibilities under the contract; or

(2) 30 percent of the family's monthly adjusted income equals or is greater than the Fair Market Rent amount for the unit size for which the family qualifies.

Termination of the Contract of Participation

The HA may terminate this contract if:

(1) the family and the HA agree to terminate the contract;

(2) the HA determines that the family has not fulfilled its responsibilities under this contract;

(3) the family withdraws from the FSS program;

(4) an act occurs that is inconsistent with the purpose of the FSS program; or

(5) the HA is permitted in accordance with HUD requirements.

The HA may declare this contract null and void if the resources and services necessary to complete the contract are not available.

The HA must give a notice of termination or nullification to the head of the family. The notice must state the reasons for the HA decision to terminate or nullify the contract.

If the contract is terminated or declared null and void, the family has no right to receive funds from the family's FSS escrow account. The HA must close the family's FSS escrow account and may use the funds for purposes in accordance with HUD requirements.

If the family is participating in the Section 8 program, the HA will terminate the contract if the family moves outside the HA's jurisdiction under Section 8 portability procedures and enters the FSS program of another HA.

If the family is participating in the Section 8 program, this contract is automatically terminated if the family's section 8 assistance is terminated in accordance with HUD requirements.

Conflict with the Public or Indian Housing Lease

If part of this contract conflicts with the public or Indian housing lease, the lease will prevail.

Compliance with HUD Regulations and Requirements

The contract of participation must be interpreted and administered in accordance with HUD regulations and requirements. Terms and figures, such as the income and rent amount on page 1, are subject to correction by the HA for compliance with HUD regulations and requirements. The HA must notify the family in writing of any adjustments made to the contract.

Signatures:

Family	Housing Agency
	_____ (Name of HA)
_____ (Signature of head of family)	
	_____ (Signature of HA Official)
_____ (Date Signed)	
	_____ (Official Title)
	_____ (Date Signed)

Each Housing Agency (HA) must enter into a contract of participation with each eligible family that opts to participate in the FSS program. Each HA must consult with local officials to develop and action plan containing descriptions of the size, characteristics, and needs of the population to be served by its proposed FSS program; the services and activities it will provide; how the program will implemented; the public and private resources through which services and activities will be provided; a time-table for implementation; and other data necessary for HUD to ensure coordinated implementation of program services and activities.

Public reporting burden for this collection of information is estimated to average 1.0 hours per response, including the time for reviewing instructions, searching existing data sources, gathering and maintaining the data needed, and completing and reviewing the collection of information.

Response to this collection of information is mandatory by law (Section 23 (c) & (g) of the U.S. Housing Act of 1937, as added by Section 554 of the Cranston-Gonzalez National Affordable Housing Act (PL 101-625) for participation in the FSS program.

The information collected on this form is considered sensitive and is protected by the Privacy Act. The Privacy Act requires that these records be maintained with appropriate administrative, technical, and physical safeguards to ensure their security and confidentiality. In addition, these records should be protected against any anticipated threats to ,their security or integrity which could result in substantial harm, embarrassment, inconvenience, or unfairness to any individual on whom the information is maintained.

HUD may not conduct or sponsor, and a person is not required to respond to, a collection of information unless it displays a currently valid OMB control number.

HA Instructions for Executing the FSS Contract of Participation

Parties to the Contract/Signatures

The head of the participating family must be the adult member of the family who is the head of the household for income eligibility and rent purposes.

Term of Contract

The effective date is the first day of the month following the date the contract was signed by the family and the HA's representative.

The expiration date is five years from the effective date of the contract.

If the HA decides to extend the term of the contract, the original expiration date listed on page one of the contract must be crossed out and the new expiration date added.

If a family moves under Section 8 portability procedures and is going to participate in the receiving HA's FSS program, the effective date of the contract between the family and the receiving HA is the first day of the month following the date the contract was signed by the family and the HA's representative. The expiration date of the contract between the receiving HA and the family **must** be the same as the expiration date of the contract between the initial HA and the family.

FSS Escrow Account

The income and rent numbers to be inserted on page one may be taken from the amounts on the last reexamination or interim determination before the family's initial participation in the FSS program, unless more than 120 days will pass between the effective date of the reexamination and the effective date of the contract of participation. If it has been more than 120 days, the HA must conduct a new reexamination or interim redetermination.

If a family moves under Section 8 portability procedures and is going to participate in the receiving HA's FSS program, the receiving HA must use the amounts listed for annual income, earned income, and family rent on page one of the contract between the initial HA and the family.

Changes to the Contract

This contract of participation can only be changed to modify the contract term, the head of the family, or the individual training and services plans.

Any change of the head of the family under the contract must be included as an attachment to the contract. The attachment must contain the name of the new designated head of the family, the signatures of the new head of the family and an HA representative, and the date signed.

Any change/s to an individual training and services plan must be included as a revision to the individual training and services plan (attachment) to which the change applies. The revision must include the item changed, signatures of the participant and an HA representative, and the date signed.

For extensions to the contract term, see the "Term of Contract" section.

If, twelve months after the effective date of the contract, a family in the Section 8 FSS program moves outside of the HA's jurisdiction under Section 8 portability procedures, an HA may take one of the following actions:

(1) The initial HA may permit the family to continue to participate in its FSS program, if the family demonstrates to the initial HA's satisfaction that it can meet the family responsibilities of the contract in the new location. In this case, the existing contract remains in effect with no change. The initial HA must transfer the family's FSS escrow account balance when the family is absorbed by the receiving HA.

(2) The receiving HA may permit the family to participate in its FSS program. If so, the initial HA must terminate its contract with the family. The initial HA must also transfer the family's FSS escrow account balance when the family is absorbed by the receiving HA. The receiving HA will execute a new contract with the family.

(3) In cases where the family cannot fulfill its family obligations in the new location, and the receiving HA does not permit the family to participate in its FSS program, the contract between the initial HA and the family shall terminate and the family will lose the funds in its FSS escrow account.

Individual Training and Services Plans

The contract must include an individual training and services plan for the head of the family. Other family members age eighteen and older may choose to execute an individual training and services plan if agreed to by the HA.

The resources and supportive services to be provided to each family member must be listed in the individual training and services plans which are attachments to the contract of participation.

Page one of each participant's individual training and services plan includes space for the final goal and the first interim goal needed to achieve the final goal. The additional pages provide a format for recording each interim goal and specific information related to its achievement. The first page of each participant's plan must be signed by the participant and an HA representative.

Interim goals must be specified along with the activities and services needed to achieve them. For example, a single mother with two children who has an interim goal of completing her secondary education might require several different activities and services to achieve that goal. These could include transportation, tutoring, and child care.

All completion dates included in the individual training and services plan/s must be on or before the contract of participation expires.

One of the interim goals for families receiving welfare assistance is to become independent of welfare assistance for at least twelve consecutive months before the end of the contract. Any family that is receiving welfare assistance **must** have this included as an interim goal in the head of the family's individual training and services plan.

The final goal listed on the individual training and services plan of the head of the family **must** include getting and maintaining suitable employment specific to that individual's skills, education, job training, and the available job opportunities in the area.

Incentives

If the HA has chosen to offer other incentives in connection with the FSS program, these incentives may be included in the individual training and services plans or as an attachment to this contract.

Family Self-Sufficiency Program
Individual Training and Services Plan

Attachment _____

Name of Participant	Social Security Number

Final Goal

Interim Goal Number _____

Date Accomplished _____

Activities/Services	Responsible Parties	Date/s

Comments

Signatures:

Family	**Housing Agency**
(Participant)	(Signature of HA Representative)
(Date Signed)	(Date Signed)

Family Self-Sufficiency Program
Individual Training and Services Plan

Attachment _____

Name of Participant	Social Security Number

Interim Goal Number _____

Date Accomplished _____

Activities/Services	Responsible Parties	Date/s

Comments

Family Self-Sufficiency Program
FSS Escrow Account Credit Worksheet

U.S. Department of Housing and Urban Development
Office of Public and Indian Housing

OMB Approval No. 2577-0178
(exp. 05/31/2003)

Escrow credit must be determined at each reexamination and interim determination occurring after the effective date of the FSS Contract of Participation while the family is participating in the FSS program.

Head of the FSS family	Date
1. Current Annual Income (Enter amount on line 5 of form HUD-50058.)	1.
2. Applicable Lower-Income Limit (Enter the current lower-income limit for the jurisdiction in which the FSS family is living.)	2.
3. Current Adjusted Income (Enter amount on line 10b of form HUD-50058.) **If line 3 is greater than line 2, this family does not qualify for an FSS credit.**	3.
4. Earned income included in line 1 (Add up the income items coded B, M, F, and W in column 3a of form HUD-50058.)	4.
5. Earned income included in Annual Income on effective date of the FSS Contract of Participation. (Enter amount from contract of participation.)	5.
6. Increase in earned income since the effective date of the FSS Contract of Participation. (Subtract line 5 from line 4. If negative, enter 0.)	6.
7. Current Annual Income less increase in earned income since the effective date of the FSS Contract of Participation. (Subtract line 6 from line 1.)	7.
8. Thirty percent of current monthly Adjusted Income (Line 3 divided by 40. The calculated amount should equal the amount on line 11 of form HUD-50058.)	8.
9. Current Adjusted Income less increase in earned income since the effective date of the FSS Contract of Participation. (Subtract line 6 from line 3.)	9.
10. 30% of current monthly Adjusted Income less increase in earned income since the effective date of the FSS Contract of Participation. (Line 9 divided by 40)	10.
11. 10% of current monthly Annual Income less increase in earned income since the effective date of the FSS Contract of Participation. (Line 7 divided by 120)	11.
12. If applicable, welfare rent (enter amount on line 13 of form HUD-50058) or public housing ceiling rent (enter amount on line 16a of form HUD-50058)	12.
13. TTP based on current Annual Income less increase in earned income since effective date of the FSS Contract of Participation. (If rental vouchers, enter the amount on line 10, otherwise, enter the greater of line 10, 11, or 12.)	13.
14. Difference between 30% of current monthly Adjusted Income and TTP adjusted for increases in earned income. (Subtract line 13 from line 8. Enter 0 if negative.)	14.
15. Current TTP (Enter the amount on line 16b of form HUD-50058 or, in the case of rental vouchers, enter the amount on line 8 of this form.)	15.
16. TTP on effective date of the FSS Contract of Participation or, in the case of rental vouchers, 30% of monthly Adjusted Income on effective date of the FSS Contract of Participation. (Enter amount from contract of participation.)	16.
17. Difference between current TTP and TTP on effective date of the FSS Contract of Participation. (Subtract line 16 from line 15. Enter 0 if negative.)	17.
18. Enter the lesser of line 14 or line 17.	18.
19. Applicable Very Low-Income Limit (Enter the current very low-income limit for the jurisdiction in which the FSS family is living.)	19.
20. Amount by which Adjusted Income exceeds the Very Low-Income Limit (Subtract line 19 from line 3.)	20.
21. 30% of the amount by which Adjusted Income exceeds the Very Low-Income Limit (Line 20 divided by 40)	21.
22. Escrow credit (Subtract line 21 from line 18.)	22.

This HUD form is optional and is used here to illustrate the process. PHAs may develop their own FSS Worksheet.

Previous Editions are Obsolete

form HUD-52652 (12/93)
ref. Handbook 7420.8

Each Housing Agency (HA) must enter into a contract of participation with each eligible family that opts to participate in the FSS program. Each HA must consult with local officials to develop and action plan containing descriptions of the size, characteristics, and needs of the population to be served by its proposed FSS program; the services and activities it will provide; how the program will implemented; the public and private resources through which services and activities will be provided; a time-table for implementation; and other data necessary for HUD to ensure coordinated implementation of program services and activities.

Public reporting burden for this collection of information is estimated to average 1.0 hours per response, including the time for reviewing instructions, searching existing data sources, gathering and maintaining the data needed, and completing and reviewing the collection of information. Send comments regarding this burden estimate or any other aspect of this collection of information, including suggestions for reducing this burden, to the Reports Management Officer, Paperwork Reduction Project (2577-0178), Office of Information Technology, U.S. Department of Housing and Urban Development, Washington, D.C. 20410-3600 .

Do not send this form to the above address.

Response to this collection of information is mandatory by law (Section 23 (c) & (g) of the U.S. Housing Act of 1937, as added by Section 554 of the Cranston-Gonzalez National Affordable Housing Act (PL 101-625) for participation in the FSS program.

The information collected on this form is considered sensitive and is protected by the Privacy Act. The Privacy Act requires that these records be maintained with appropriate administrative, technical, and physical safeguards to ensure their security and confidentiality. In addition, these records should be protected against any anticipated threats to ,their security or integrity which could result in substantial harm, embarrassment, inconvenience, or unfairness to any individual on whom the information is maintained.

HUD may not conduct or sponsor, and a person is not required to respond to, a collection of information unless it displays a currently valid OMB control number.

Instructions for Completing the FSS Escrow Account Credit Worksheet

1. An escrow credit must be determined at each reexamination and interim determination occurring after the effective date of the FSS contract of participation while the family is participating in the FSS program.

2. The amount of the escrow credit can be calculated using Form HUD-52652, or another document which incorporates the procedures in Form HUD-52652.

3. The amount of the escrow credit will vary depending on the income level of each FSS family and is based on increases of **earned** income since the effective date of the contract of participation. If the family's adjusted income exceeds the lower-income limit in the jurisdiction in which the FSS family is living (the amount on line 3 is greater than the amount on line 2), the family does not qualify for an escrow credit. In such cases, line 4 - line 22 of Form HUD-52652 will not be completed.

[FR Doc. 03–4448 Filed 2–25–03; 8:45 am]
BILLING CODE 4210–33–P

DEPARTMENT OF HOUSING AND URBAN DEVELOPMENT

[Docket No. FR–4456–N–24]

Privacy Act of 1974; Notice of a Computer Matching Program

AGENCY: Office of the Chief Information Officer, (HUD).

ACTION: Notice of a computer matching program between the Department of Housing and Urban Development (HUD) and the Department of Education.

SUMMARY: In accordance with the Privacy Act of 1974 (5 U.S.C. 552a), as amended by the Computer Matching and Privacy Protection Act of 1988 (Pub. L. 100–503), and the Office of Management and Budget (OMB) Guidelines on the Conduct of Matching Programs (54 FR 25818 (June 19, 1989)), and OMB Bulletin 89–22, ''Instructions on Reporting Computer Matching Programs to the Office of Management and Budget (OMB), Congress and the Public,'' HUD is issuing a public notice of its intent to conduct a recurring computer matching program with the Department of Education to utilize a computer information system of HUD, the Credit Alert Interactive Voice Response System (CAIVRS), with the Department of Education's debtor files. This match will allow prescreening of applicants for loans issued by or guaranteed by the Federal government to ascertain if the applicant is delinquent in paying a debt owed to or insured by the Federal government for HUD or the Department of Education for direct or guaranteed loans.

Before granting a loan, the lending agency and/or the authorized lending institution will be able to interrogate the CAIVRS debtor file which contains delinquent debt information from the Departments of Agriculture, Education, Veteran Affairs, the Small Business administration and judgment lien data from the Department of Justice, and verify that the applicant is not in default on a Federal judgment or delinquent on direct or guaranteed loans of participating Federal agencies. This match will allow prescreening of applicants for loans issued by or guaranteed by the Federal government to ascertain if the applicant is delinquent in paying a debt owed to or insured by the Federal government.

Authorized users do a prescreening of CAIVRS to determine a loan applicant's credit status with the Federal government. As a result of the information produced by this match, the authorized users may not deny, terminate, or make a final decision of any loan assistance to an applicant or take other adverse action against such applicant, until an officer or employee of such agency has independently verified such information.

DATES: *Effective Date:* Computer matching is expected to begin on March 28, 2003, unless comments are received which will result in a contrary determination, or 40 days from the date a computer matching agreement is signed, whichever is later.

Comments Due Date: March 28, 2003.

ADDRESSES: Interested persons are invited to submit comments regarding this notice to the Rules Docket Clerk, Office of General Counsel, Room 10276, Department of Housing and Urban Development, 451 Seventh Street, SW., Washington, DC 20410.

Communications should refer to the above docket number and title. A copy of each communication submitted will be available for public inspection and copying between 7:30 a.m. and 5:30 p.m. weekdays at the above address.

FOR FURTHER INFORMATION FROM RECIPIENT AGENCY CONTACT: Jeanette Smith, Departmental Privacy Act Officer, Department of Housing and Urban Development, 451 7th St., SW., Room P8001, Washington, DC 20410, telephone number (202) 708–2374. (This is not a toll-free number.) A telecommunication device for hearing- and speech-impaired individuals (TTY) is available at 1–800–877–8339 (Federal Information Relay Service). (This is a toll-free number).

FOR FURTHER INFORMATION FROM SOURCE AGENCY CONTACT: Kathryn Griffin, Management Analyst, Collections, Federal Student Aid, Department of Education, Union Center Plaza, 830 First Street, NE., Room 41D2, Washington, DC 20202–5320, telephone number (202) 377–3252. (This is not a toll-free number.)

Reporting: In accordance with Public Law 100–503, the Computer Matching and Privacy Protection Act of 1988, as amended, and OMB Bulletin 89–22, ''Instructions on Reporting Computer Matching Programs to the Office of Management and Budget (OMB), Congress and the Public,'' copies of this notice and report are being provided to the Committee on Government Reform of the House of Representatives, the Committee on Governmental Affairs of the Senate, and the Office of Management and Budget.

Authority: HUD has authority to collect and review mortgage data pursuant to the National Housing Act, as amended, 12 U.S.C 1701 *et seq.*, and related laws. The Department of Education oversees and manages Federal student aid programs pursuant to the Higher Education Act of 1965, as amended, 20 U.S.C. 1001 *et seq*. This computer matching will be conducted pursuant to Public Law 100–503, ''The Computer Matching and Privacy Protection Act of 1988,'' as amended, and Office of Management and Budget (OMB) Circulars A–129 (Managing Federal Credit Programs) and A–70 (Policies and Guidelines for Federal Credit Programs). One of the purposes of all Executive departments and agencies is to implement efficient management practices for Federal credit programs. OMB Circulars A–129 and A–70 were issued under the authority of the Budget and Accounting Act of 1921, as amended; the Budget and Accounting Act of 1950, as amended; the Debt Collection Act of 1982 (Pub. L. 97–365), as amended by the Debt Collection Improvement Act of 1996 (Pub. L. 104–134, section 31001); and the Deficit Reduction Act of 1984, as amended.

Objectives to be Met by the Matching Program: The matching program will allow the Department of Education access to a system that permits prescreening of applicants for loans issued by or guaranteed by the Federal government to ascertain if the applicant is delinquent in paying a debt owed to or insured by the government. In addition, HUD will be provided access to the Department of Education's debtor data for prescreening purposes.

Records to be Matched: HUD will utilize its system of records entitled HUD/DEPT–2, *Accounting Records*. The debtor files for HUD programs involved are included in this system of records. HUD's debtor files contain information on borrowers and co-borrowers who are currently in default (at least 90 days delinquent on their loans); or who have any outstanding claims paid during the last three years on insured or guaranteed home mortgage loans under title II of the National Housing Act; or individuals who have had a claim paid in the last three years on a loan under title I of the National Housing Act. For the CAIVRS match, HUD/DEPT–2, System of Records, receives its program inputs from HUD/DEPT–28, Property Improvement and Manufactured (Mobile) Home Loans—Default; HUD/DEPT–32, Delinquent/Default/Assigned Temporary Mortgage Assistance Payments (TMAP) Program; and HUD/CPD–1, Rehabilitation Loans-Delinquent/Default.

The Department of Education will provide HUD with debtor files contained in its system of records

(Higher Education Act, Title IV Program File, 18–40–0024). HUD is maintaining the Department of Education's records only as a ministerial action on behalf of the Department of Education, not as part of HUD's HUD/DEPT–2 system of records. The Department of Education's data contain information on individuals who have defaulted on their guaranteed loans. The Department of Education will retain ownership and responsibility for their system of records that they place with HUD. HUD serves only as a record location and routine use recipient for the Department of Education's data.

Notice Procedures: HUD and the Department of Education have separate notification procedures. When the Federal credit being sought is a HUD/FHA mortgage, HUD will notify individuals at the time of application (ensuring that routine use appears on the application form). The Department of Education will notify individuals at the time of application for Federal student loan programs that their records will be matched to determine whether they are delinquent or in default on a Federal debt. HUD and the Department of Education will also publish notices concerning routine use disclosures in the **Federal Register** to inform individuals that a computer match may be performed to determine a loan applicant's credit status with the Federal government.

Categories of Records/Individuals Involved: The debtor records include these data elements: SSN, claim number, the Department of Education's Regional Office Code, Collection Agency Code, program code, and indication of indebtedness. Categories of records include: records of claims and defaults, repayment agreements, credit reports, financial statements, and records of foreclosures. Categories of individuals include former mortgagors and purchasers of HUD-owned properties, manufactured (mobile) home and home improvement loan debtors who are delinquent or in default on their loans, and rehabilitation loan debtors who are delinquent or in default on their loans.

Period of the Match: Matching will begin at least 40 days from the date copies of the signed (by both Data Integrity Boards) computer matching agreement are sent to both Houses of Congress or at least 30 days from the date this notice is published in the **Federal Register**, whichever is later, providing no comments are received which would result in a contrary determination.

Dated: February 11, 2003.

Gloria R. Parker,

Chief Technology Officer.

[FR Doc. 03–4445 Filed 2–25–03; 8:45 am]

BILLING CODE 4210–72–P

DEPARTMENT OF HOUSING AND URBAN DEVELOPMENT

[Docket No. FR–4456–N–25]

Privacy Act of 1974; Notice of a Computer Matching Program

AGENCY: Office of the Chief Information Officer, (HUD).

ACTION: Notice of a computer matching program between the Department of Housing and Urban Development (HUD) and the Department of Veterans Affairs (VA).

SUMMARY: In accordance with the Privacy Act of 1974 (5 U.S.C. 552a), as amended by the Computer Matching and Privacy Protection Act of 1988 (Pub. L. 100–503), and the Office of Management and Budget (OMB) Guidelines on the Conduct of Matching Programs (54 FR 25818 (June 19, 1989)), and OMB Bulletin 89–22, ''Instructions on Reporting Computer Matching Programs to the Office of Management and Budget (OMB), Congress and the Public,'' HUD is issuing a public notice of its intent to conduct a recurring computer matching program with the Department of Veterans Affairs (VA) to utilize a computer information system of HUD, the Credit Alert Interactive Voice Response System (CAIVRS), with VA's debtor files. This match will allow prescreening of applicants for loans issued by or guaranteed by the Federal government to ascertain if the applicant is delinquent in paying a debt owed to or insured by the Federal government for HUD or VA direct or guaranteed loans.

Before granting a loan, the lending agency and/or the authorized lending institution will be able to interrogate the CAIVRS debtor file and verify that the loan applicant is not in default on a Federal judgment or delinquent on direct or guaranteed loans of participating Federal agencies. The CAIVRS database contains delinquent debt information from the Departments of Agriculture, Education, Veteran Affairs, the Small Business Administration and judgment lien data from the Department of Justice.

Authorized users do a prescreening of CAIVRS to determine a loan applicant's credit status with the Federal government. As a result of the information produced by this match, the authorized users may not deny, terminate, or make a final decision of any loan assistance to an applicant or take other adverse action against such applicant, until an officer or employee of such agency has independently verified such information.

DATES: *Effective Date:* Computer matching is expected to begin on March 28, 2003, unless comments are received which will result in a contrary determination, or 40 days from the date a computer matching agreement is signed, whichever is later.

Comments Due Date: March 28, 2003.

ADDRESSES: Interested persons are invited to submit comments regarding this notice to the Rules Docket Clerk, Office of General Counsel, Room 10276, Department of Housing and Urban Development, 451 Seventh Street, SW., Washington, DC 20410.

Communications should refer to the above docket number and title. A copy of each communication submitted will be available for public inspection and copying between 7:30 a.m. and 5:30 p.m. weekdays at the above address.

FOR FURTHER INFORMATION FROM RECIPIENT AGENCY CONTACT: Jeanette Smith, Departmental Privacy Act Officer, Department of Housing and Urban Development, 451 7th St., SW., Room P8001, Washington, DC 20410, telephone number (202) 708–2374. (This is not a toll-free number.) A telecommunication device for hearing and speech-impaired individuals (TTY) is available at 1–800–877–8339 (Federal Information Relay Service). (This is not a toll-free number.)

FOR FURTHER INFORMATION FROM SOURCE AGENCY CONTACT: Don Toivola, Chief, Computer Specialist, Debt Management Center, U.S. Department of Veterans Affairs, Bishop Henry Whipple Federal Building, Room 156, 1 Federal Drive, Ft. Snelling, MN 55111–4050, telephone number (612) 970–5705. (This is not a toll-free number.)

Reporting: In accordance with Public Law 100–503, the Computer Matching and Privacy Protection Act of 1988, as amended, and OMB Bulletin 89–22, ''Instructions on Reporting Computer Matching Programs to the Office of Management and Budget (OMB), Congress and the Public,'' copies of this notice and report are being provided to the Committee on Government Reform of the House of Representatives, the Committee on Governmental Affairs of the Senate, and the Office of Management and Budget.

Authority: HUD has authority to collect and review mortgage data pursuant to the National Housing Act, as amended, 12 U.S.C. 1701 *et seq.,* and related laws. The VA is authorized

pursuant to 38 U.S.C. 3710, to determine that any veteran who obtains a VA-guaranteed home loan poses a satisfactory credit risk. This computer matching will be conducted pursuant to Public Law 100–503, ''The Computer Matching and Privacy Protection Act of 1988,'' as amended, and Office of Management and Budget (OMB) Circulars A–129 (Managing Federal Credit Programs) and A–70 (Policies and Guidelines for Federal Credit Programs). OMB Circulars A–129 and A–70 were issued under the authority of the Budget and Accounting Act of 1921, as amended; the Budget and Accounting Act of 1950, as amended; the Debt Collection Act of 1982 (Public Law 97–365), as amended by the Debt Collection Improvement Act of 1996 (Public Law 104–134, section 31001); and the Deficit Reduction Act of 1984, as amended.

Objectives to be Met by the Matching Program: The matching program will allow VA access to a system that permits prescreening of applicants for loans or loans guaranteed by the Federal government to ascertain if the applicant is delinquent in paying a debt owed to or insured by the government. In addition, HUD will be provided access to VA's debtor data for prescreening purposes.

Records to be Matched: HUD will utilize its system of records entitled HUD/DEPT–2, *Accounting Records.* The debtor files for HUD programs involved are included in this system of records. HUD's debtor files contain information on borrowers and co-borrowers who are currently in default (at least 90 days delinquent on their loans); or who have any outstanding claims paid during the last three years on insured or guaranteed home mortgage loans under title II of the National Housing Act, or individuals who have defaulted on rehabilitation loans under section 312 of the Housing Act of 1964, or individuals who have had a claim paid in the last three years on a loan under title I of the National Housing Act. For the CAIVRS match, HUD/DEPT–2, System of Records, receives its program inputs from HUD/DEPT–28, Property Improvement and Manufactured (Mobile) Home Loans—Default; HUD/DEPT–32, Delinquent/Default/Assigned Temporary Mortgage Assistance Payments (TMAP) Program; and HUD/CPD–1, Rehabilitation Loans—Delinquent/Default.

The VA will provide HUD with debtor files contained in its system of records entitled SS–VA26, Loan Guaranty Systems of Records. Central Accounts Receivable On Line System is a subsidiary of SS–VA26. HUD is maintaining VA's records only as a ministerial action on behalf of VA, not as a part of HUD's HUD/DEPT–2 system of records. VA's data contain information on individuals who have defaulted on their guaranteed loans. The VA will retain ownership and responsibility for their systems of records that they place with HUD. HUD serves only as a record location and routine use recipient for VA's data.

Notice Procedures: HUD and the VA will notify individuals at the time of application (ensuring that routine use appears on the application form) for guaranteed or direct loans that their records will be matched to determine whether they are delinquent or in default on a Federal debt. HUD and the VA will also publish notices concerning routine use disclosures in the **Federal Register** to inform individuals that a computer match may be performed to determine a loan applicant's credit status with the Federal government.

Categories of Records/Individuals Involved: The debtor records include these data elements from HUD's systems of records, HUD/Dept–2: SSN, claim number, program code, and indication of indebtedness. Categories of records include: records of claims and defaults, repayment agreements, credit reports, financial statements, and records of foreclosures. Categories of individuals include former mortgagors and purchasers of HUD-owned properties, manufactured (mobile) home and home improvement loan debtors who are delinquent or in default on their loans, and rehabilitation loan debtors who are delinquent or in default on their loans.

Period of the Match: Matching will begin at least 40 days from the date copies of the signed (by both Data Integrity Boards) computer matching agreements are sent to both Houses of Congress or at least 30 days from the date this notice is published in the **Federal Register**, whichever is later, providing no comments are received which would result in a contrary determination. The matching program will be in effect and continue for 18 months with an option to renew for 12 additional months unless one of the parties to the agreement advises the other in writing to terminate or modify the agreement.

Dated: February 11, 2003.

Gloria R. Parker,

Chief Technology Officer.

[FR Doc. 03–4446 Filed 2–25–03; 8:45 am]

BILLING CODE 4210–72–P

DEPARTMENT OF THE INTERIOR

Fish and Wildlife Service

Minor Adjustment of Kodiak National Wildlife Refuge Boundary

AGENCY: Fish and Wildlife Service, Interior.

ACTION: Notice of boundary adjustment.

SUMMARY: The Secretary of the Interior, acting through the Regional Director, Region 7, of the Fish and Wildlife Service, has made a minor modification to the boundary of the Kodiak National Wildlife Refuge in the State of Alaska. This boundary adjustment was made to incorporate a parcel of land which is adjacent to the former Refuge boundary. This parcel is a portion of a large, phased acquisition by the State of Alaska using *Exxon Valdez* oil spill settlement funds. This action added 2,699.75 acres to the Refuge.

DATES: Title to the land in question vested in the United States of America on December 5, 2000. Notification to Congress of the proposed boundary change was provided April 3, 2002.

ADDRESSES: Division of Realty, Fish and Wildlife Service, 1011 East Tudor Road, Anchorage, Alaska 99503–6199.

FOR FURTHER INFORMATION CONTACT: Sharon N. Janis, 907–786–3490

SUPPLEMENTARY INFORMATION: In 2000, 2,699.75 acres of land were acquired from Afognak Joint Venture by the United States, for administration by the Fish and Wildlife Service. These lands lie outside, but adjacent to, the boundary of the Kodiak National Wildlife Refuge as established by the Alaska National Interest Lands Conservation Act. These lands are identified as Tract B of the Subdivision of Tract B Waterfall Addition, according to the plat thereof filed as Plat No. 2000–20 on November 8, 2000, in the Kodiak Recording District, Third Judicial District, State of Alaska, which is located in Sections 4, 9, 15, 16, 17, 19, 20, and 21, Township 21 South, Range 20 West, Seward Meridian, Alaska.

Section 103(b) of the Alaska National Interest Lands Conservation Act (16 U.S.C. 3103(b)) establishes authority for the Secretary of the Interior to make minor boundary adjustments to the Wildlife Refuges created by the Act. Under this authority, and following due notice to Congress, the Secretary, acting through the Regional Director, Region 7, of the Fish and Wildlife Service, has used this authority to adjust the boundaries of the Kodiak Refuge to include the 2,699.75 acres of land referenced above. This adjustment

modifies the boundary previously described in the **Federal Register** (48 FR 7966, Feb. 24, 1983).

David B. Allen,

Regional Director.

[FR Doc. 03–4527 Filed 2–25–03; 8:45 am]

BILLING CODE 4310–55–M

DEPARTMENT OF THE INTERIOR

Bureau of Land Management

[OR–120–5101 ER–H019, GP2–0332]

Record of Decision; Coos County Natural Gas Pipeline, Coos County, OR

AGENCY: Bureau of Land Management, Interior.

ACTION: Notice of availability of Record of Decision.

SUMMARY: Pursuant to Section 102 of the National Environmental Policy Act of 1969, an Environmental Impact Statement (EIS) was prepared, by a third party contract, for the Bureau of Land Management (BLM), Coos Bay District Office. The EIS was prepared to analyze impacts and alternatives for the Coos County Board of Commissioners proposed natural gas transmission pipeline from near Roseburg in Douglas County, Oregon, to Coos Bay in Coos County, Oregon. The proposed project would result in granting Coos County a right-of-way for the construction, operation and maintenance of a 12 inch natural gas pipeline across approximately three miles of BLM-administered lands located in Coos and Douglas Counties, Oregon. The Final EIS was released for public review December 13, 2002. The Record of Decision (ROD) was signed by the Coos Bay District Manager on February 18, 2003, approving the proposed action and incorporating project design criteria and best management practices analyzed under the proposed action.

Copies of the ROD can be obtained from the Coos Bay District Office at Coos Bay District, BLM, 1300 Airport Lane, North Bend, OR 97459. The ROD may be examined at the Coos Bay District Office in North Bend, Oregon and local libraries. The ROD will also be available electronically at the BLM Coos Bay District Web site *(http://www.or.blm.gov/coosbay)* and the Coos County Web site *(http://www.co.coos.or.us).* Additionally, a copy of the ROD will be mailed to individuals, agencies or companies that commented during the scoping process, or on the Draft and Final EIS.

EFFECTIVE DATES: Parties adversely affected by the Record of Decision have 30 days, from the date of publication of this notice, to file a Notice of Appeal in the office which issued this decision (43 CFR 4.413). The decision to grant the right-of-way is in full force and effect, effective on the date of signing of the Record of Decision. A petition for a stay of the decision must be filed in accordance with the above cited regulations.

ADDRESSES: A copy of the Record of Decision can be obtained from: Bureau of Land Management, Coos Bay District Office at Coos Bay District, BLM, 1300 Airport Lane, North Bend, OR 97459.

A notice of Appeal should be addressed to: Bureau of Land Management, Coos Bay District Office, 1300 Airport Lane, North Bend, OR 97459, with a copy to: Office of the Regional Solicitor, Kaiser Permanente Bldg. Suite 607, 500 Multnomah Street NE, Portland, OR 97232. A copy must also be sent to: Department of the Interior Board of Land Appeals, 4015 Wilson Blvd., Arlington, Virginia 22203.

FOR FURTHER INFORMATION CONTACT: Bob Gunther, Project Coordinator, at address above or telephone (541–751–4295), fax: 541–751–4303, or e-mail comments to the attention of *Bob_Gunther@or.blm.gov.*

Dated: July 31, 2002.

Mark E. Johnson,

Coos Bay Associate District Manager.

Note: This document was received at the Office of the Federal Register on February 21, 2003.

[FR Doc. 03–4496 Filed 2–25–03; 8:45 am]

BILLING CODE 4310–33–P

DEPARTMENT OF THE INTERIOR

Bureau of Land Management

[MT–926–03–1420–BJ]

Montana: Filing of Amended Protraction Diagram Plats

AGENCY: Bureau of Land Management, Montana State Office, Interior.

ACTION: Notice of filing of amended protraction diagram plats.

SUMMARY: The Bureau of Land Management (BLM) will file the plats of the amended protraction diagrams in the BLM Montana State Office, Billings, Montana, (30) days from the date of publication in the **Federal Register**.

FOR FURTHER INFORMATION CONTACT: Robert L. Brockie, Cadastral Surveyor, Branch of Cadastral Survey, Bureau of Land Management, 5001 Southgate Drive, P.O. 36800, Billings, Montana 59107–6800, telephone (406) 896–5125 or (406) 896–5009.

SUPPLEMENTARY INFORMATION: The amended protraction diagrams were prepared at the request of the U.S. Forest Service, and were necessary to accommodate Revision of Primary Base Quadrangle Maps for the Geometronics Service Center. The lands for the prepared amended protraction diagrams are:

Principal Meridian, Montana

Tps. 15, 16, and 17 S., Rs. 10 and 12 W.

The plat, representing the Amended Protraction Diagram 56 Index of unsurveyed Townships 15, 16, and 17 South, Ranges 10 and 12 West, Principal Meridian, Montana, was accepted February 13, 2003.

T. 15 S., R. 12 W.

The plat, representing Amended Protraction Diagram 56 of unsurveyed Township 15 South, Range 12 West, Principal Meridian, Montana, was accepted February 13, 2003.

T. 16 S., R. 10 W.

The plat, representing Amended Protraction Diagram 56 of unsurveyed Township 16 South, Range 10 West, Principal Meridian, Montana, was accepted February 13, 2003.

T. 17 S., R. 10 W.

The plat, representing Amended Protraction Diagram 56 of unsurveyed Township 17 South, Range 10 West, Principal Meridian, Montana, was accepted February 13, 2003.

T. 7 S., R. 13 W.

The plat, representing Amended Protraction Diagram 57 (no index) of unsurveyed Township 7 South, Range 13 West, Principal Meridian, Montana, was accepted February 13, 2003.

We will place a copy of the plats we described in the open files. They will be available to the public as a matter of information.

If BLM receives protests against these amended protraction diagrams, as shown on these plats, prior to the date of the official filings, we will stay the filings pending our consideration of the protests.

We will not officially file these plats of the amended protraction diagrams until the day after we have accepted or dismissed all protests and they have become final, including decisions on appeals.

Dated: February 19, 2003.

Thomas M. Deiling,

Chief Cadastral Surveyor, Division of Resources.

[FR Doc. 03–4485 Filed 2–25–03; 8:45 am]

BILLING CODE 4310–44–P

DEPARTMENT OF THE INTERIOR

Bureau of Reclamation

Humboldt Project Conveyance, Pershing and Lander Counties, NV

AGENCY: Bureau of Reclamation, Interior.

ACTION: Notice of intent to prepare an Environmental Impact Statement (EIS).

SUMMARY: Pursuant to section 102(2) (c) of the National Environmental Policy Act (NEPA), the Bureau of Reclamation (Reclamation) proposes to prepare an Environmental Impact Statement (EIS) for the Humboldt Project Conveyance. Reclamation will be conducting public scoping meetings to elicit comments on the scope and issues to be addressed in the draft EIS. Reclamation is also seeking written comments, as noted below. The draft EIS is expected to be issued in early 2004. Public notification will occur for all scoping meetings to be held for this draft EIS.

DATES: Written comments on the scope of alternatives and impacts to be considered should be sent to Reclamation at the address below by June 15, 2003.

ADDRESSES: Written comments should be sent to Caryn Huntt DeCarlo, Bureau of Reclamation, Lahontan Basin Area Office, 705 N. Plaza, Room 320, Carson City, NV 89701; or by telephone at 775–884–8352; or faxed to 775–882–7592 (TDD 775–487–5933).

FOR FURTHER INFORMATION CONTACT: Caryn Huntt DeCarlo, Bureau of Reclamation, at the above address and telephone number.

SUPPLEMENTARY INFORMATION: The Humboldt Project (Project) is located along the Humboldt River in northwestern Nevada. Reclamation began the Project construction in 1935, and in 1941 the first water was delivered to the agricultural lands from storage in Rye Patch Reservoir. The Pershing County Water Conservation District (PCWCD) assumed operation of the Project in 1941. PCWCD has had several Project repayment contracts with Reclamation that have all been repaid. Project features include Battle Mountain Community Pasture, Rye Patch Dam and Reservoir, and the Humboldt Sink. Battle Mountain Community Pasture, located near Battle Mountain, is approximately 30,000 acres and is managed for grazing by the PCWCD under a lease agreement with Reclamation. Rye Patch Reservoir is located 26 miles upstream from Lovelock, is 21 miles in length, and has a capacity of 190,000 acre-feet. The State of Nevada manages the recreation at the reservoir under a management agreement with Reclamation and the PCWCD. The Humboldt Sink is also part of the Project and is managed by the State of Nevada under a management agreement with Reclamation.

Reclamation is preparing an EIS to analyze the action of conveying title of the Humboldt Project and associated lands to several entities. The conveyance is authorized under title VIII of Public Law 107–282. The preliminary estimate of acres of conveyance is as follows: PCWCD 48,700 acres (portions of Rye Patch Reservoir and the Battle Mountain Community Pasture); Pershing County 960 acres (portion of the Humboldt Sink area); Lander County 1,100 acres (portion of the Battle Mountain Community Pasture); and the State of Nevada 19,700 acres (portions of Rye Patch Reservoir, Humboldt Sink, and in the Battle Mountain Community Pasture).

The environmental impacts of the Project conveyance and associated alternatives will be assessed in the EIS. The environmental review in the EIS will focus on the potential for Project conveyance to cause adverse environmental impacts to natural and cultural resources such as recreation, endangered species and other fish and wildlife, and historic resources.

Our practice is to make comments, including names and home addresses of respondents, available for public review. Individual respondents may request that we withhold their home address from public disclosure, which we will honor to the extent allowable by law. There may also be circumstances in which we would withhold a respondent's identity from public disclosure, as allowable by law. If you wish us to withhold your name and/or address, you must state this prominently at the beginning of your comment. We will make all submissions from organizations or businesses, and from individuals identifying themselves as representatives or officials of organizations or businesses, available for public disclosure in their entirety.

Dated: January 31, 2003.

Frank Michny,

Regional Environmental Officer, Mid-Pacific Region.

[FR Doc. 03–4456 Filed 2–25–03; 8:45 am]

BILLING CODE 4310–MN–P

INTERNATIONAL TRADE COMMISSION

[Inv. No. 337–TA–488]

In the Matter of Certain Screen Printing Machines, Vision Alignment Devices Used Therein, and Component Parts Thereof; Notice of Investigation

AGENCY: International Trade Commission.

ACTION: Institution of investigation pursuant to 19 U.S.C. 1337.

SUMMARY: Notice is hereby given that a complaint was filed with the U.S. International Trade Commission on January 17, 2003, under section 337 of the Tariff Act of 1930, as amended, 19 U.S.C. 1337, on behalf of Speedline Technologies, Inc. of Franklin, Massachusetts. A letter supplementing the complaint was filed on February 7, 2003. The complaint as supplemented alleges violations of section 337 in the importation into the United States, the sale for importation, and the sale within the United States after importation of certain screen printing machines, vision alignment devices used therein, and component parts thereof by reason of infringement of claims 1, 2, 3, 4, and 18 of U.S. Patent No. 5,060,063. The complaint further alleges that an industry in the United States exists as required by subsection (a)(2) of section 337.

The complainant requests that the Commission institute an investigation and, after the investigation, issue a permanent exclusion order and a permanent cease and desist order.

ADDRESSES: The complaint and supplement, except for any confidential information contained therein, are available for inspection during official business hours (8:45 a.m. to 5:15 p.m.) in the Office of the Secretary, U.S. International Trade Commission, 500 E Street, SW., Room 112, Washington, DC 20436, telephone 202–205–2000. Hearing impaired individuals are advised that information on this matter can be obtained by contacting the Commission's TDD terminal on 202–205–1810. Persons with mobility impairments who will need special assistance in gaining access to the Commission should contact the Office of the Secretary at 202–205–2000. General information concerning the Commission may be obtained by accessing its Internet server (*http://www.usitc.gov*). The public record for this investigation may be viewed on the Commission's electronic docket at *http://edis.usitc.gov.*

FOR FURTHER INFORMATION CONTACT: James B. Coughlan, Esq., Office of

Unfair Import Investigations, U.S. International Trade Commission, telephone 202–205–2221.

Authority: The authority for institution of this investigation is contained in section 337 of the Tariff Act of 1930, as amended, and in § 210.10 of the Commission's rules of practice and procedure, 19 CFR 210.10 (2002).

Scope of Investigation: Having considered the complaint, the U.S. International Trade Commission, on February 19, 2003, *ordered that*—

(1) Pursuant to subsection (b) of section 337 of the Tariff Act of 1930, as amended, an investigation be instituted to determine whether there is a violation of subsection (a)(1)(B) of section 337 in the importation into the United States, the sale for importation, or the sale within the United States after importation of certain screen printing machines, vision alignment devices used therein, or component parts thereof by reason of infringement of claim 1, 2, 3, 4, or 18 of U.S. Patent No. 5,060,063, and whether an industry in the United States exists as required by subsection (a)(2) of section 337.

(2) For the purpose of the investigation so instituted, the following are hereby named as parties upon which this notice of investigation shall be served:

(a) The complainant is—Speedline Technologies, Inc., 16 Forge Park, Franklin, Massachusetts 02038.

(b) The respondents are the following companies alleged to be in violation of section 337, and are the parties upon which the complaint is to be served:

EKRA America, Inc., 34 Saint Martin Drive, Marlborough, Massachusetts 01752.

EKRA Germany GmbH, Zeppelinstrasse 16, D–74357, Bonnigheim, Germany.

(c) James B. Coughlan, Esq., Office of Unfair Import Investigations, U.S. International Trade Commission, 500 E Street, SW., Suite 401, Washington, DC 20436, who shall be the Commission investigative attorney, party to this investigation; and

(3) For the investigation so instituted, the Honorable Delbert R. Terrill, Jr. is designated as the presiding administrative law judge.

Responses to the complaint and the notice of investigation must be submitted by the named respondents in accordance with § 210.13 of the Commission's rules of practice and procedure, 19 CFR 210.13. Pursuant to 19 CFR 201.16(d) and 210.13(a), such responses will be considered by the Commission if received no later than 20 days after the date of service by the Commission of the complaint and the notice of investigation. Extensions of time for submitting responses to the complaint will not be granted unless good cause therefor is shown.

Failure of a respondent to file a timely response to each allegation in the complaint and in this notice may be deemed to constitute a waiver of the right to appear and contest the allegations of the complaint and to authorize the administrative law judge and the Commission, without further notice to that respondent, to find the facts to be as alleged in the complaint and this notice and to enter both an initial determination and a final determination containing such findings, and may result in the issuance of a limited exclusion order or a cease and desist order or both directed against that respondent.

Issued: February 20, 2003.

By order of the Commission.

Marilyn R. Abbott,

Secretary.

[FR Doc. 03–4458 Filed 2–25–03; 8:45 am]

BILLING CODE 7020–02–P

INTERNATIONAL TRADE COMMISSION

[Inv. Nos. 701–TA–376, 377 and 379 and 731–TA–788–793 (Final)(Remand)]

Certain Stainless Steel Plate from Belgium, Canada, Italy, Korea, South Africa, and Taiwan; Notice of Final Court Decision Affirming Remand Determinations

AGENCY: International Trade Commission.

ACTION: Notice.

SUMMARY: The Commission gives notice of a final court decision affirming its final affirmative material injury determinations, made pursuant to court remand, in the countervailing duty and antidumping duty investigations of certain stainless steel plate (SSP) from Belgium, Canada, Italy, Korea, South Africa, and Taiwan.

FOR FURTHER INFORMATION CONTACT: Michael Diehl, Esq., Office of the General Counsel, U.S. International Trade Commission, 500 E Street, SW., Washington, DC 20436, telephone 202–205–3095. General information concerning the Commission may also be obtained by accessing its Internet server (*http://www.usitc.gov*). Hearing-impaired persons are advised that information on this matter can be obtained by contacting the Commission's TDD terminal on 202–205–1810. The public record for this investigation may be viewed on the Commission's electronic docket (EDIS–ON–LINE) at *http://dockets.usitc.gov/eol/public.*

SUPPLEMENTARY INFORMATION: In May of 1999, the Commission made original final determinations in *Certain Stainless Steel Plate from Belgium, Canada, Italy, Korea, South Africa, and Taiwan*, Invs. Nos. 701–TA–376, 377 and 379 and 731–TA–788–793 (Final), USITC Pub. 3188. A majority of the Commissioners found two domestic like products: hot-rolled SSP and cold-rolled SSP. The Commission reached affirmative material injury determinations with respect to subject imports of hot-rolled SSP from each of the six named countries. As to cold-rolled SSP, the Commission reached negative material injury and threat determinations with respect to subject imports from Belgium and Canada, and found the volume of subject imports from Italy, Korea, South Africa and Taiwan to be negligible. The remaining Commissioners found one like product, and reached affirmative material injury determinations encompassing subject imports of both hot-rolled SSP and cold-rolled SSP.

The affirmative determinations as to hot-rolled SSP were appealed to the U.S. Court of International Trade (CIT). The CIT affirmed the challenged aspect of the Commission's determination in *Acciai Speciali Terni* v. *United States*, 118 F. Supp. 2d 1298 (CIT 2000) .

The Commission's cold-rolled SSP determinations were the subject of a separate appeal. The CIT upheld the Commission's determinations. *Allegheny Ludlum Corp.* v. *United States*, 116 F. Supp. 2d 1276 (CIT 2000). On subsequent appeal to the Court of Appeals for the Federal Circuit, that Court found the Commission's analysis to be flawed. *Allegheny Ludlum Corp.* v. *United States,* 287 F.3d 1365 (Fed. Cir. 2002). The Federal Circuit vacated the decision of the CIT, and remanded for proceedings not inconsistent with its decision.

On remand, the Commission determined that an industry in the United States is materially injured by reason of imports of certain stainless steel plate from Belgium, Canada, Italy, Korea, South Africa, and Taiwan that the U.S. Department of Commerce determined were sold in the United States at less than fair value, and the subject imports from Belgium, Italy, and South Africa that the U.S. Department of Commerce determined were subsidized. *Certain Stainless Steel Plate From Belgium, Canada, Italy, Korea, South Africa, and Taiwan*, Inv. Nos. 701–TA–376, 377 and 379 (Final) and 731–TA–

788–793 (Final) (Remand), USITC Pub. 3541 (Sept. 2002).

On December 12, 2002, the CIT affirmed the Remand Determination as being in accordance with the Court's remand order. There was no timely appeal of the order to the Federal Circuit.

The judicial proceedings having ended and the final court decision having been issued, the Commission, pursuant to 19 U.S.C. 1516(e), publishes notice of the final court decision affirming its remand determinations.

By order of the Commission.

Issued: February 20, 2003.

Marilyn R. Abbott,

Secretary.

[FR Doc. 03–4459 Filed 2–25–03; 8:45 am]

BILLING CODE 7020–02–P

INTERNATIONAL TRADE COMMISSION

[Investigation No. TA–421–2]

Certain Steel Wire Garment Hangers From China

Determination

On the basis of information developed in the subject investigation, the United States International Trade Commission determines, pursuant to section 421(b)(1) of the Trade Act of 1974,[1] that certain steel wire garment hangers[2] from the People's Republic of China are being imported into the United States in such increased quantities or under such conditions as to cause market disruption to the domestic producers of like or directly competitive products.

Recommendations on Proposed Remedies

Chairman Deanna Tanner Okun, Vice Chairman Jennifer A. Hillman, and Commissioner Marcia E. Miller propose that the President impose a duty, in addition to the current rate of duty, for a three-year period, on imports of the subject steel wire garment hangers from China as follows: 25 percent ad valorem in the first year, 20 percent ad valorem in the second year, and 15 percent ad valorem in the third year of relief. They further recommend that, if applications are filed, the President direct the U.S. Department of Commerce and the U.S. Department of Labor to provide expedited consideration of trade adjustment assistance for firms and/or workers affected by the subject imports.

Commissioner Lynn M. Bragg proposes that the President impose a duty, in addition to the current rate of duty, for a two-year period, on imports of the subject steel wire garment hangers from China as follows: 20 percent ad valorem in the first year, and 15 percent ad valorem in the second year of relief.

Commissioner Stephen Koplan proposes that the President impose a duty of 30 percent ad valorem, in addition to the current rate of duty, for a three-year period, on imports of the subject steel wire garment hangers from China. He further recommends that, if applications are filed, the President direct the U.S. Department of Commerce and the U.S. Department of Labor to provide expedited consideration of trade adjustment assistance for firms and/or workers affected by the subject imports.

The Commissioners each find that the respective actions that they propose are necessary to remedy the market disruption found to exist.

Background

Following receipt of a petition filed on November 27, 2002, on behalf of CHC Industries, Inc.; M&B Metal Products Co., Inc.; and United Wire Hanger Corp., the Commission instituted investigation No. TA–421–2, Certain Steel Wire Garment Hangers From China, under section 421 of the Trade Act of 1974 to determine whether certain steel wire garment hangers from China are being imported into the United States in such increased quantities or under such conditions as to cause or threaten to cause market disruption to the domestic producers of like or directly competitive products.

Notice of the institution of the Commission's investigation and of the scheduling of a public hearing to be held in connection therewith was given by posting a copy of the notice on the Commission's website (*www.usitc.gov*) and by publishing the notice in the **Federal Register** of December 6, 2002 (67 FR 72700). The hearing was held on January 9, 2003, in Washington, DC; all persons who requested the opportunity were permitted to appear in person or by counsel.

The views of the Commission are contained in USITC Publication 3575 (February 2003), entitled Certain Steel Wire Garment Hangers from China: Investigation No. TA–421–2.

By order of the Commission.

Issued: February 20, 2003.

Marilyn R. Abbott,

Secretary to the Commission.

[FR Doc. 03–4460 Filed 2–25–03; 8:45 am]

BILLING CODE 7020–02–P

DEPARTMENT OF JUSTICE

Office of Community Oriented Policing Services; FY 2002 Community Policing Discretionary Grants

AGENCY: Office of Community Oriented Policing Services, Department of Justice.

ACTION: Notice of availability of the finding of no significant impact and the environmental assessment.

SUMMARY: The Environmental Assessment, which is available to the public, concludes that the methamphetamine investigation and clandestine laboratory closure activities of the Methamphetamine/Drug Hot Spots Program will not have significant impact on the quality of the human environment.

ADDRESSES: For copies of the Environmental Assessment and the Finding of No Significant Impact, please contact: COPS Grants Administration Division, 1100 Vermont Avenue, NW., Washington, DC 20530; Phone: (202) 616–3031 or 1–800–421–6770.

FOR FURTHER INFORMATION CONTACT: The U.S. Department of Justice Response Center, 1–800–421–6770 and ask to speak with your Grant Program Specialist.

SUPPLEMENTARY INFORMATION: In Fiscal Year 2000, the COPS Office collaborated with the Bureau of Justice Assistance and the Drug Enforcement Administration, Department of Justice, to prepare an Environmental Assessment for methamphetamine law enforcement programs, and with specific application for the Methamphetamine/Drug Hot Spots Program. This Environmental Assessment was prepared as required by

[1] 19 U.S.C. 2451(b)(1).

[2] For purposes of this investigation, certain steel wire garment hangers consist of garment hangers, fabricated from steel wire in gauges from 9 to 17, inclusive (3.77 to 1.37 millimeters, inclusive), whether or not galvanized or painted, whether or not coated with latex or epoxy or other similar gripping materials, and whether or not fashioned with paper covers or capes (with or without printing) and/or nonslip features such as saddles, tubes, or struts. After fabrication, such hangers are in lengths from 7 to 20 inches, inclusive (177.8 to 508 millimeters, inclusive), and the hanger's length or bottom bar is composed of steel wire and/or saddles, tubes or struts. The product may also be identified by its commercial designation, referring to the shape and/or style of the hanger or the garment for which it is intended, including but not limited to shirt, suit, strut, and caped hangers. Specifically excluded are wooden, plastic, aluminum, and other garment hangers that are covered under separate subheadings of the HTS. The products subject to this investigation are classified in subheading 7326.20.00 of the HTS and reported under statistical reporting number 7326.20.0020. Although the HTS subheading is provided for convenience and Customs purposes, the written description of the merchandise is dispositive.

the Council on Environmental Quality's regulations (40 CFR Parts 1500 through 1508), implementing the National Environmental Policy Act of 1969 (42 U.S.C. 4321, *et al.*). The Methamphetamine/Drug Hot Spots Program addresses a broad array of law enforcement initiatives pertaining to the investigation of methamphetamine trafficking in many heavily impacted areas of the country. For the purposes of this program, law enforcement may include training of law enforcement officers in methamphetamine-related issues; collection and maintenance of intelligence and information relative to methamphetamine trafficking and traffickers; investigation, arrest and prosecution of producers, traffickers and users of methamphetamine; interdiction and removal of laboratories, finished products, and precursor chemicals and other elements necessary to produce methamphetamine; and preventive efforts to reduce the spread and use of methamphetamine. Individual projects will reflect a concentration on program areas consistent with Congressional appropriations.

Among the many challenges faced by law enforcement agencies in the Methamphetamine/Drug Hot Spots Program will be discovery, interdiction, and dismantling of clandestine drug laboratories. These lab sites, as well as other methamphetamine crime venues must be comprehensively dealt with in compliance with a variety of health, safety and environmental laws and regulations. The COPS Office requires that recipients, when encountering illegal drug laboratories, use grant funds to effect the proper removal and disposal of hazardous materials located at those laboratories and directly associated sites in accordance with all applicable laws and regulations.

Overview

Environmental Assessment

The COPS Office will award grants to State and local criminal justice agencies for the FY 2002 COPS Methamphetamine/Drug Hot Spots Program. The Environmental Assessment concludes that the funding of this program will not have a significant impact on the quality of the human environment. Therefore, an Environmental Impact Statement will not be prepared for the funding of this program.

Dated: February 9, 2003.

Carl R. Peed,

Director, Office of Community Oriented Policing Services.

[FR Doc. 03–4543 Filed 2–25–03; 8:45 am]

BILLING CODE 4410–AT–M

DEPARTMENT OF JUSTICE

Notice of Lodging of Consent Decree Under the Comprehensive Environmental Response, Compensation, and Liability Act and the Clean Water Act

Notice is hereby given that on February 19, 2003, a proposed Consent Decree in *United States* v. *Certus, Inc.,* Civil Action No. 1:02CV00095, was lodged with the United States District Court for the Western District of Virginia.

In this action the United States sought recovery under Section 107 of the Comprehensive Environmental Response, Compensation, and Liability Act (''CERCLA''), 42 U.S.C. 9607, and Section 311(f) of the Federal Water Pollution Control Act (''Clean Water Act''), 33 U.S.C. 1321(f), of natural resource damages resulting from the release of hazardous substances from a tanker truck into the Clinch River in Tazewell County, Virginia. The Consent Decree requires Settling Defendant Certus, Inc. to pay $3,707,432.84 to the United States and the Commonwealth of Virginia, as co-Trustees for natural resources, for use in restoring the natural resources injured by the release. In addition, Certus will pay $92,567.16 to the United States in reimbursement of outstanding natural resource damages assessment costs. Certus previously reimbursed the United States $481,967.40 for additional assessment costs.

The Department of Justice will receive for a period of thirty (30) days from the date of this publication comments relating to the Consent Decree. Comments should be addressed to the Assistant Attorney General, Environment and Natural Resources Division, P.O. Box 7611, U.S. Department of Justice, Washington, DC 20044–7611, and should refer to *United States* v. *Certus, Inc.,* D.J. Ref. No. 90–11–2–07004.

The Consent Decree may be examined at the Office of the United States Attorney, Western District of Virginia, 105 Franklin Road, SW., Roanoke, VA 24011, and at U.S. Fish & Wildlife Service, Virginia Field Office, 6669 Short Lane, Gloucester, VA 23061. During the public comment period, the Consent Decree may also be examined on the following Department of Justice Web site, *http://www.usdoj.gov/enrd/open.html.* A copy of the Consent Decree may also be obtained by mail from the Consent Decree Library, P.O. Box 7611, U.S. Department of Justice, Washington, DC 20044–7611 or by faxing or e-mailing a request to Tonia Fleetwood (*tonia.fleetwood@usdoj.gov*), fax no. (202) 514–0097, phone confirmation number (202) 514–1547. In requesting a copy, please enclose a check in the amount of $6.50 (25 cents per page reproduction cost) payable to the U.S. Treasury.

Robert D. Brook,

Assistant Chief, Environmental Enforcement Section, Environment and Natural Resources Division.

[FR Doc. 03–4541 Filed 2–25–03; 8:45 am]

BILLING CODE 4410–15–M

DEPARTMENT OF JUSTICE

Environment and Natural Resources Division; Notice of Lodging Proposed Consent Decree

In accordance with Departmental Policy, 28 CFR § 50.7, notice is hereby given that a proposed consent decree in *United States* v. *Hammond,* No. 01 C 5559, was lodged with the United States District Court for the Northern District of Illinois on February 12, 2003. This proposed Consent Decree concerns a complaint filed by the United States against Danny Hammond, pursuant to the Clean Water Act, to obtain injunctive relief from and impose civil penalties against Hammond for violations of Sections 301(a) and 404 of the Act, 33 U.S.C. 1311(a), 1344.

The proposed Consent Decree requires Hammond to remove the fill material, restore the affected wetland, place a deed restriction on the property, and pay a civil penalty of $10,000.

The Department of Justice will accept written comments relating to this proposed Consent Decree for thirty (30) days from the date of publication of this notice. Please address comments to Jonathan C. Haile, Assistant United States Attorney, 219 S. Dearborn St., Chicago, Illinois 60604, and refer to *United States* v. *Hammond,* No. 01 C 5559.

The proposed Consent Decree may be examined at the Clerk's Office, United States District Court for the Northern District of Illinois. In addition, the proposed Consent Decree may be viewed on the World Wide Web at *http://www.usdoj.gov/enrd/enrd-home.html.*

Letitia J. Grishaw,

Chief, Environmental Defense Section, Environment & Natural Resources Division.

[FR Doc. 03–4542 Filed 2–25–03; 8:45 am]

BILLING CODE 4410–15–M

DEPARTMENT OF LABOR

Office of the Secretary

Bureau of International Labor Affairs; Request for Information Concerning Labor Rights in Chile and Its Laws Governing Exploitative Child Labor

AGENCIES: Office of the Secretary, Labor; Office of the United States Trade Representative and Department of State.

ACTION: Request for public comments.

SUMMARY: This notice is a request for public comments to assist the Secretary of Labor, the United States Trade Representative, and the Secretary of State in preparing reports regarding labor rights in Chile and describing the extent to which Chile has in effect laws governing exploitative child labor. The Trade Act of 2002 requires reports on these issues and others when the President intends to use trade promotion authority procedures in connection with legislation approving and implementing a trade agreement. On December 11, 2002, negotiators for the United States and Chile announced that they had reached substantive agreement on a Free Trade Agreement. On January 31, 2003, President Bush notified the Congress of his intent to enter into an FTA with Chile. This agreement will be subject to trade promotion authority procedures. The President assigned the functions of preparing reports regarding labor rights and the existence of laws governing exploitative child labor to the Secretary of Labor, in consultation with the Secretary of State and the United States Trade Representative. The Secretary of Labor further assigned these functions to the Secretary of State and United States Trade Representative.

DATES: Public comments should be received no later than 5 p.m. March 28, 2003.

ADDRESSES: Persons submitting comments are strongly advised to make such submissions by electronic mail to the following address: *FRFTACHILE@dol.gov.* Submissions by facsimile may be sent to: Betsy White at the Office of International Economic Affairs, Bureau of International Labor Affairs (202) 693–4851.

FOR FURTHER INFORMATION CONTACT: For procedural questions regarding the submissions, please contact Betsy White, Bureau of International Labor Affairs, Office of International Economic Affairs, at (202) 693–4919, facsimile (202) 693–4851. These are not toll-free numbers. Substantive questions concerning the labor rights report and/or the report on Chile's laws governing exploitative child labor should be addressed to Jorge Perez-Lopez, Office of International Economic Affairs, Bureau of International Labor Affairs, U.S. Department of Labor, 200 Constitution Avenue, NW., Washington, DC 20210, telephone (202) 693–4883.

SUPPLEMENTARY INFORMATION:

I. Background

The Trade Act of 2002 (Pub. L. 107–210) (the Trade Act) sets forth special procedures (Trade Promotion Authority) for approval and implementation of Agreements subject to meeting conditions and requirements in the Act. Division B of the Trade Act, entitled the Bipartisan Trade Promotion Authority Act of 2002, includes negotiating objectives and a listing of priorities for the President to promote in order to ''address and maintain United States competitiveness in the global economy'' in pursuing future trade agreements. 19 U.S.C. 3802(a)–(c). The President delegated several of the functions in section 3802(c) to the Secretary of Labor. (E.O. 13277). These include the functions set forth in section 2102(c)(8), which requires that the President ''in connection with any trade negotiations entered into under this Act, submit to the Committee on Ways and Means of the House of Representatives and the Committee on Finance of the Senate a meaningful labor rights report of the country, or countries, with respect to which the President is negotiating'' and the function in section 2102(c)(9), which requires that the President ''with respect to any trade agreement which the President seeks to implement under trade authorities procedures, submit to the Congress a report describing the extent to which the country or countries that are parties to the agreement have in effect laws governing exploitative child labor.''

II. Information Sought

Interested parties are invited to submit written information as specified below to be taken into account in drafting the required reports. Materials submitted should be confined to the specific topics of the reports. In particular, agencies are seeking written submissions on the following topics:

1. Chile's labor laws, including laws governing exploitative child labor, and Chile's implementation and enforcement of such laws and regulations;
2. The situation in Chile with respect to core labor standards;
3. Steps taken by Chile to comply with International Labor Organization Convention 182 on the worst forms of child labor; and
4. The nature and extent, if any, of exploitative child labor in Chile.

Section 2113(6) of the Trade Act defines ''core labor standards'' as:

(A) The right of association;

(B) The right to organize and bargain collectively;

(C) A prohibition on the use of any form of forced or compulsory labor;

(D) A minimum age for the employment of children; and

(E) Acceptable conditions of work with respect to minimum wages, hours of work, and occupational safety and health.

III. Requirements for Submissions

This document is a request for facts or opinions submitted in response to a general solicitation of comments from the public. To ensure prompt and full consideration of submissions, we strongly recommend that interested persons submit comments by electronic mail to the following e-mail address: *FRFTACHILE@dol.gov.* Persons making submissions by e-mail should use the following subject line: ''Chile: Labor Rights and Child Labor Reports.'' Documents should be submitted in WordPerfect, MSWord, or text (.TXT) format. Supporting documentation submitted as spreadsheets is acceptable in Quattro Pro or Excel format. Persons who make submissions by e-mail should not provide separate cover letters; information that might appear in a cover letter should be included in the submission itself. Similarly, to the extent possible, any attachments to the submission should be included in the same file as the submission itself, and not as separate files. Written comments will be placed in a file open to public inspection at the Department of Labor, Room S–5317, 200 Constitution Avenue, NW., Washington DC and in the USTR Reading Room in Room 3 of the annex of the Office of the USTR, 1724 F Street, NW., Washington, DC 20508. An appointment to review the file at the Department of Labor may be made by contacting Betsy White at (202) 693–4919. An appointment to review the file at USTR may be made by calling (202) 395–6186. The USTR Reading Room is generally open to the public from 10 a.m.–12 noon and 1–4 p.m. Monday through Friday. Appointments must be scheduled at least 48 hours in advance.

Signed at Washington, DC this 20th day of February, 2003.

Thomas B. Moorhead,

Deputy Under Secretary for International Affairs.

[FR Doc. 03–4499 Filed 2–25–03; 8:45 am]

BILLING CODE 4510–28–P

DEPARTMENT OF LABOR

Employment and Training Administration

Labor Certification Process for the Temporary Employment of Aliens in Agriculture and Logging in the United States: 2003 Adverse Effect Wage Rates, Allowable Charges for Agricultural and Logging Workers' Meals, and Maximum Travel Subsistence Reimbursement

AGENCY: Employment and Training Administration, Labor.

ACTION: Notice of adverse effect wage rates (AEWRs), allowable charges for meals, and maximum travel subsistence reimbursement for 2003.

SUMMARY: The Employment and Training Administration (ETA), announces 2003 adverse effect wage rates (AEWRs) for employers seeking nonimmigrant alien (H–2A) workers for temporary or seasonal agricultural labor or services, the allowable charges employers seeking nonimmigrant alien workers for temporary or seasonal agricultural labor or services or logging work may levy upon their workers when they provide three meals per day, and the maximum travel subsistence reimbursement which a worker with receipts may claim in 2003.

AEWRs are the minimum wage rates which the Department of Labor has determined must be offered and paid to U.S. and alien workers by employers of nonimmigrant alien agricultural workers (H–2A visaholders). AEWRs are established to prevent the employment of these aliens from adversely affecting wages of similarly employed U.S. workers.

The Department of Labor also announces the new rates which covered agricultural and logging employers may charge their workers for three daily meals.

Under specified conditions, workers are entitled to reimbursement for travel subsistence expense. The minimum reimbursement is the charge for three daily meals as discussed above. The Department of Labor here announces the current maximum reimbursement for workers with receipts.

EFFECTIVE DATE: February 26, 2003.

FOR FURTHER INFORMATION CONTACT: Mr. Dale M. Ziegler, Chief, Division of Foreign Labor Certification, U.S. Department of Labor, Room C–4318, 200 Constitution Avenue, NW., Washington, DC 20210. Telephone: 202–693–2942 (this is not a toll-free number).

SUPPLEMENTARY INFORMATION: The Attorney General may not approve an employer's petition for admission of temporary alien agricultural (H–2A) workers to perform agricultural labor or services of a temporary or seasonal nature in the United States unless the petitioner has applied to the Department of Labor (DOL) for an H–2A labor certification. The labor certification must show that: (1) There are not sufficient U.S. workers who are able, willing, and qualified and who will be available at the time and place needed to perform the labor or services involved in the petition; and (2) the employment of the alien in such labor or services will not adversely affect the wages and working conditions of workers in the United States similarly employed. 8 U.S.C. 1101(a)(15)(H)(ii)(a), 1184(c), and 1188.

DOL's regulations for the H–2A program require that covered employers offer and pay their U.S. and H–2A workers no less than the applicable hourly adverse effect wage rate (AEWR). 20 CFR 655.102(b)(9); see also 20 CFR 655.107. Reference should be made to the preamble to the July 5, 1989, final rule (54 FR 28037), which explains in great depth the purpose and history of AEWRs, DOL's discretion in setting AEWRs, and the AEWR computation methodology at 20 CFR 655.107(a). See also 52 FR 20496, 20502–20505 (June 1, 1987).

A. Adverse Effect Wage Rates (AEWRs) for 2003

Adverse effect wage rates (AEWRs) are the minimum wage rates which DOL has determined must be offered and paid to U.S. and alien workers by employers of nonimmigrant (H–2A) agricultural workers. DOL emphasizes, however, that such employers must pay the highest of the AEWR, the applicable prevailing wage or the statutory minimum wage, as specified in the regulations. 20 CFR 655.102(b)(9). Except as otherwise provided in 20 CFR Part 655, Subpart B, the regionwide AEWR for all agricultural employment (except those occupations deemed inappropriate under the special circumstances provisions of 20 CFR 655.93) for which temporary alien agricultural labor (H–2A) certification is being sought, is equal to the annual weighted average hourly wage rate for field and livestock workers (combined) for the region as published annually by the U.S. Department of Agriculture (USDA does not provide data on Alaska). 20 CFR 655.107(a).

The regulation at 20 CFR 655.107(a) requires the Assistant Secretary, Employment and Training Administration, to publish USDA field and livestock worker (combined) wage data as AEWRs in a **Federal Register** notice. Accordingly, the 2003 AEWRs for work performed on or after the effective date of this notice, are set forth in the table below:

TABLE—2003 ADVERSE EFFECT WAGE RATES (AEWRS)

State	2003 AEWR
Alabama	$7.49
Arizona	7.61
Arkansas	7.13
California	8.44
Colorado	8.07
Connecticut	8.53
Delaware	7.97
Florida	7.78
Georgia	7.49
Hawaii	9.29
Idaho	7.70
Illinois	8.65
Indiana	8.65
Iowa	8.91
Kansas	8.53
Kentucky	7.20
Louisiana	7.13
Maine	8.53
Maryland	7.97
Massachusetts	8.53
Michigan	8.70
Minnesota	8.70
Mississippi	7.13
Missouri	8.91
Montana	7.70
Nebraska	8.53
Nevada	8.07
New Hampshire	8.53
New Jersey	7.97
New Mexico	7.61
New York	8.53
North Carolina	7.75
North Dakota	8.53
Ohio	8.65
Oklahoma	7.29
Oregon	8.71
Pennsylvania	7.97
Rhode Island	8.53
South Carolina	7.49
South Dakota	8.53
Tennessee	7.20
Texas	7.29
Utah	8.07
Vermont	8.53
Virginia	7.75
Washington	8.71
West Virginia	7.20
Wisconsin	8.70
Wyoming	7.70

B. Allowable Meal Charges

Among the minimum benefits and working conditions which DOL requires employers to offer their alien and U.S. workers in their applications for temporary logging and H–2A agricultural labor certification is the provision of three meals per day or free and convenient cooking and kitchen facilities. 20 CFR 655.102(b)(4) and 655.202(b)(4). Where the employer provides meals, the job offer must state

the charge, if any, to the worker for meals.

DOL has published at 20 CFR 655.102(b)(4) and 655.111(a) the methodology for determining the maximum amounts covered H–2A agricultural employers may charge their U.S. and foreign workers for meals. The same methodology is applied at 20 CFR 655.202(b)(4) and 655.211(a) to covered H–2 logging employers. These rules provide for annual adjustments of the previous year's allowable charges based upon Consumer Price Index (CPI) data.

Each year the maximum charges allowed by 20 CFR 655.102(b)(4) and 655.202(b)(4) are changed by the same percentage as the twelve-month percent change in the CPI for all Urban Consumers for Food (CPI–U for Food) between December of the year just past and December of the year prior to that. Those regulations and 20 CFR 655.111(a) and 655.211(a) provide that the appropriate Regional Administrator (RA), Employment and Training Administration, may permit an employer to charge workers no more than a higher maximum amount for providing them with three meals a day, if justified and sufficiently documented. Each year, the higher maximum amounts permitted by 20 CFR 655.111(a) and 655.211(a) are changed by the same percentage as the twelve-month percent change in the CPI–U for Food between December of the year just past and December of the year prior to that. The regulations require the Department of Labor to make the annual adjustments and to cause a notice to be published in the **Federal Register** each calendar year, announcing annual adjustments in allowable charges that may be made by covered agricultural and logging employers for providing three meals daily to their U.S. and alien workers. The 2002 rates were published in a notice on May 17, 2002 at 67 FR 35150.

DOL has determined the percentage change between December of 2001 and December of 2002 for the CPI–U for Food was 1.8 percent.

Accordingly, the maximum allowable charges under 20 CFR 655.102(b)(4), 655.202(b)(4), 655.111, and 655.211 were adjusted using this percentage change, and the new permissible charges for 2003 are as follows: (1) For 20 CFR 655.102(b)(4) and 655.202(b)(4), the charge, if any, shall be no more than $8.59 per day, unless the RA has approved a higher charge pursuant to 20 CFR 655.111 or 655.211(b); for 20 CFR 655.111 and 655.211, the RA may permit an employer to charge workers up to $10.64 per day for providing them with three meals per day, if the employer justifies the charge and submits to the RA the documentation required to support the higher charge.

C. Maximum Travel Subsistence Expense

The regulations at 20 CFR 655.102(b)(5) establish that the minimum daily subsistence expense related to travel expenses, for which a worker is entitled to reimbursement, is the employer's daily charge for three meals or, if the employer makes no charge, the amount permitted under 20 CFR 655.104(b)(4). The regulation is silent about the maximum amount to which a qualifying worker is entitled.

The Department, in Field Memorandum 42–94, established that the maximum is the meals component of the standard CONUS (continental United States) per diem rate established by the General Services Administration (GSA) and published at 41 CFR Ch. 301. The CONUS meal component is now $30.00 per day.

Workers who qualify for travel reimbursement are entitled to reimbursement up to the CONUS meal rate for related subsistence when they provide receipts. In determining the appropriate amount of subsistence reimbursement, the employer may use the GSA system under which a traveler qualifies for meal expense reimbursement per quarter of a day. Thus, a worker whose travel occurred during two quarters of a day is entitled, with receipts, to a maximum reimbursement of $15.00. If a worker has no receipts, the employer is not obligated to reimburse above the minimum stated at 20 CFR 655.102(b)(4) as specified above.

Signed at Washington, DC, this 21st day of February, 2003.

Emily Stover De Rocco,

Assistant Secretary, Employment and Training Administration.

[FR Doc. 03–4500 Filed 2–25–03; 8:45 am]

BILLING CODE 4510–30–P

NATIONAL AERONAUTICS AND SPACE ADMINISTRATION

[Notice 03–017]

Government-Owned Inventions, Available for Licensing

ACTION: Notice of availability of inventions for licensing.

SUMMARY: The inventions listed below are assigned to the National Aeronautics and Space Administration, have been filed in the United States Patent and Trademark Office, and are available for licensing.

DATES: February 26, 2003.

FOR FURTHER INFORMATION CONTACT: Rob Padilla, Patent Counsel, Ames Research Center, Mail Code 202A–4, Moffett Field, CA 94035–1000; telephone (650) 604–5104, fax (650) 604–2767.

NASA Case No. ARC–14650–1: Diffraction-Based Optical Correlator;

NASA Case No. ARC–14661–1: A Plasma Apparatus And Process For Functionalization Of Carbon Nanotubes.

Dated: February 19, 2003.

Robert M. Stephens,

Deputy General Counsel.

[FR Doc. 03–4430 Filed 2–25–03; 8:45 am]

BILLING CODE 7510–01–P

NATIONAL AERONAUTICS AND SPACE ADMINISTRATION

[Notice 03–018]

Government-Owned Inventions, Available for Licensing

ACTION: Notice of availability of inventions for licensing.

SUMMARY: The inventions listed below are assigned to the National Aeronautics and Space Administration, have been filed in the United States Patent and Trademark Office, and are available for licensing.

DATES: February 26, 2003.

FOR FURTHER INFORMATION CONTACT: Kent N. Stone, Patent Counsel, Glenn Research Center at Lewis Field, Mail Code 500–118, Cleveland, OH 44135; telephone (216) 433–8855, fax (216) 433–6790.

NASA Case No. LEW–16901–1: A Real-Time Signal-To-Noise Ratio Estimation Technique For BPSK And QPSK Modulation Using The Active Communications Channel;

NASA Case No. LEW–17176–1: Endwall Treatment And Method For Gas Turbines;

NASA Case No. LEW–17235–1: Resistance Temperature Detector (RTD) Bridge Flow Sensor;

NASA Case No. LEW–17236–1: Computer Mouse Cleaning Apparatus;

NASA Case No. LEW–17237–1: Lateral Movement Of Screw Dislocations During Homoepitaxial Growth And Device Yielded Therefrom Free Of The Detrimental Effects Of Screw Dislocation;

NASA Case No. LEW–17256–1: MEMS Direct Chip Attach (MEMS–DCA) Packaging Methodologies For Harsh Environments;

NASA Case No. LEW–17318–1: A High Temperature, High Versatility Nickel-Base Disk Alloy.

Dated: February 19, 2003.

Robert M. Stephens,

Deputy General Counsel.

[FR Doc. 03–4431 Filed 2–25–03; 8:45 am]

BILLING CODE 7510–01–P

NATIONAL AERONAUTICS AND SPACE ADMINISTRATION

[Notice 03–019]

Government-Owned Inventions, Available for Licensing

ACTION: Notice of availability of inventions for licensing.

SUMMARY: The invention listed below is assigned to the National Aeronautics and Space Administration, has been filed in the United States Patent and Trademark Office, and is available for licensing.

DATES: February 26, 2003.

FOR FURTHER INFORMATION CONTACT: Diana Cox, Patent Counsel, Goddard Space Flight Center, Mail Code 503, Greenbelt, MD 20771; telephone (301) 286–7351; fax (301) 286–9502.

NASA Case No. GSC–14601–1: Method For Manufacturing High Quality Carbon Nanotubes.

Dated: February 19, 2003.

Robert M. Stephens,

Deputy General Counsel.

[FR Doc. 03–4432 Filed 2–25–03; 8:45 am]

BILLING CODE 7510–01–P

NATIONAL AERONAUTICS AND SPACE ADMINISTRATION

[Notice 03–020]

Government-Owned Inventions, Available for Licensing

ACTION: Notice of availability of inventions for licensing.

SUMMARY: The inventions listed below are assigned to the National Aeronautics and Space Administration, have been filed in the United States Patent and Trademark Office, and are available for licensing.

DATES: February 26, 2003.

FOR FURTHER INFORMATION CONTACT: Edward Fein, Patent Counsel, Johnson Space Center, Mail Code HA, Houston, TX 77058–3696, telephone (281) 483–4871; fax (281) 244–8452.

NASA Case No. MSC–23029–2: Simulator for a Pseudo Noise Geological Radar;

NASA Case No. MSC–23029–3: Method for Controlling a Producing Zone of a Well in a Geological Formation;

NASA Case No. MSC–23349–1: Ad Hoc Selection of Voice Over Internet Streams;

NASA Case No. MSC–23427–1: Microwave Ablation Of Prostatic Cells Using A Separated Antenna Array.

Dated: February 19, 2003.

Robert M. Stephens,

Deputy General Counsel.

[FR Doc. 03–4433 Filed 2–25–03; 8:45 am]

BILLING CODE 7510–01–P

NATIONAL AERONAUTICS AND SPACE ADMINISTRATION

[Notice 03–021]

Government-Owned Inventions, Available for Licensing

ACTION: Notice of availability of inventions for licensing.

SUMMARY: The inventions listed below are assigned to the National Aeronautics and Space Administration, have been filed in the United States Patent and Trademark Office, and are available for licensing.

DATES: February 26, 2003.

FOR FURTHER INFORMATION CONTACT: Randy Heald, Patent Counsel, Kennedy Space Center, Mail Code CC–A, Kennedy Space Flight Center, FL 32899; telephone (321) 867–7214, fax (321) 867–1817.

NASA Case No. KSC–12374: Real-Time Calibration Method For Signal-Conditioning Amplifiers;

NASA Case No. KSC–12390: Thermal Insulation Test Apparatus For Flat Specimens.

Dated: February 19, 2003.

Robert M. Stephens,

Deputy General Counsel.

[FR Doc. 03–4434 Filed 2–25–03; 8:45 am]

BILLING CODE 7510–01–P

NATIONAL AERONAUTICS AND SPACE ADMINISTRATION

[Notice 03–022]

Government-Owned Inventions, Available for Licensing

ACTION: Notice of availability of inventions for licensing.

SUMMARY: The invention listed below is assigned to the National Aeronautics and Space Administration, has been filed in the United States Patent and Trademark Office, and is available for licensing.

DATES: February 25, 2003.

FOR FURTHER INFORMATION CONTACT: Linda Blackburn, Patent Counsel, NASA Langley Research Center, Mail Code 212, Hampton, VA 23681–2199; telephone (757) 864–9260, fax (757) 864–9190.

NASA Case No. LAR–16383–1–NP: Electrically Conductive, Optically Transparent Polymer/Carbon Nanotube Composites And Process For Preparation Thereof.

Dated: February 19, 2003.

Robert M. Stephens,

Deputy General Counsel.

[FR Doc. 03–4435 Filed 2–25–03; 8:45 am]

BILLING CODE 7510–01–P

NATIONAL AERONAUTICS AND SPACE ADMINISTRATION

[Notice 03–023]

Government-Owned Inventions, Available for Licensing

ACTION: Notice of availability of inventions for licensing.

SUMMARY: The inventions listed below are assigned to the National Aeronautics and Space Administration, have been filed in the United States Patent and Trademark Office, and are available for licensing.

DATES: February 26, 2003.

FOR FURTHER INFORMATION CONTACT: James McGroary, Patent Counsel, Marshall Space Flight Center, Code LS01, Huntsville, AL 35812; telephone (256) 544–0013; fax (256) 544–0258.

NASA Case No. MFS–31584–1–CIP: Hypergolic Ignitor;

NASA Case No. MFS–31636–1: Meteoroid Damage Detection And Location System For Manned Spacecraft;

NASA Case No. MFS–31751–1: Solar Powered Automobile Interior Climate Control System.

Dated: February 19, 2003.

Robert M. Stephens,

Deputy General Counsel.

[FR Doc. 03–4436 Filed 2–25–03; 8:45 am]

BILLING CODE 7510–01–P

NATIONAL AERONAUTICS AND SPACE ADMINISTRATION

[Notice 03–024]

NASA Advisory Council, Space Science Advisory Committee; Meeting

AGENCY: National Aeronautics and Space Administration (NASA).

ACTION: Notice of meeting.

SUMMARY: In accordance with the Federal Advisory Committee Act, Pub. L. 92–463, as amended, the National Aeronautics and Space Administration announces a forthcoming meeting of the NASA Advisory Council (NAC), Space Science Advisory Committee (SScAC).

DATES: Monday, March 3, 2003, 8:30 a.m. to 5:30 p.m., Tuesday, March 4, 2003, 8:30 a.m. to 5:30 p.m., and Wednesday, March 5, 2003, 8:30 a.m. to Noon.

ADDRESSES: Jet Propulsion Laboratory, Building 180, Room 101, 4800 Oak Grove Drive, Pasadena, California 91109.

FOR FURTHER INFORMATION CONTACT: Ms. Marian R. Norris, Code SB, National Aeronautics and Space Administration, Washington, DC 20546, (202) 358–4452.

SUPPLEMENTARY INFORMATION: The meeting will be open to the public up to the capacity of the room. The agenda for the meeting includes the following topics:

—Associate Administrator's Report
—Division and Program Directors' Reports
—Launch Services Outlook
—Subcommittee Chairs' Reports
—Space Science Enterprise Strategy 2003
—Education and Public Outreach Task Force Report
—Mars Program Office Report

Due to increased security measures at the NASA Jet Propulsion Laboratory (JPL), interested members of the public including the news media must contact Joe Aguirre, (818) 354–0890, or Cecil Brower, (818) 354–6974, no later than Friday, February 24, 2003, by 4 p.m. PDT to make arrangements for badging, parking, and being escorted while at JPL. Access to JPL will be limited to those who show proper photo identification and who have made prior arrangements to attend.

It is imperative that the meeting be held on these dates to accommodate the scheduling priorities of the key participants. Any member of the public may file a written statement with the Committee; such statements should be provided to the contact above no later than five working days before the meeting. Visitors to the meeting will be requested to sign a visitor's register.

June W. Edwards,

Advisory Committee Management Officer, National Aeronautics and Space Administration.

[FR Doc. 03–4437 Filed 2–25–03; 8:45 am]

BILLING CODE 7510–01–P

NATIONAL AERONAUTICS AND SPACE ADMINISTRATION

[Notice 03–025]

NASA Advisory Council, Space Science Advisory Committee; Solar System Exploration Subcommittee Meeting

AGENCY: National Aeronautics and Space Administration (NASA).

ACTION: Notice of meeting.

SUMMARY: In accordance with the Federal Advisory Committee Act, Pub. L. 92–463, as amended, the National Aeronautics and Space Administration announces a forthcoming meeting of the NASA Advisory Council (NAC), Space Science Advisory Committee (SScAC), Solar System Exploration Subcommittee (SSES).

DATES: Thursday, March 6, 2003, 8:30 a.m. to 5:30 p.m., and Friday, March 7, 2003, 8:30 a.m. to Noon.

ADDRESSES: University of Arizona, Space Sciences Building 92, Room 309, 1629 East University, Tucson, Arizona 85719.

FOR FURTHER INFORMATION CONTACT: Ms. Marian Norris, Code SB, National Aeronautics and Space Administration, Washington, DC 20546, (202) 358–4452.

SUPPLEMENTARY INFORMATION: The meeting will be open to the public up to the capacity of the room. The agenda for the meeting includes the following topics:

—Briefing on FY 2004 Budget;
—Status of Solar System Exploration;
—Status of Mars Exploration Program;
—Status of Project Prometheus;
—Discussion of Draft 2003 Space Science Strategic Plan;

It is imperative that the meeting be held on these dates to accommodate the scheduling priorities of the key participants. Visitors will be requested to sign a visitor's register.

June W. Edwards,

Advisory Committee Management Officer, National Aeronautics and Space Administration.

[FR Doc. 03–4438 Filed 2–25–03; 8:45 am]

BILLING CODE 7510–01–P

NATIONAL SCIENCE FOUNDATION

Agency Information Collection Activities: Proposed Collection; Comment Request

AGENCY: National Science Foundation.

ACTION: Submission for OMB review; comment request.

SUMMARY: Under the Paperwork Reduction Act of 1995, Pub. L. 104–13 (44 U.S.C. 3501 *et seq.*), and as part of its continuing effort to reduce paperwork and respondent burden, the National Science Foundation (NSF) is inviting the general public and other Federal agencies to comment on this proposed continuing information collection. This is the second notice for public comment; the first was published in the **Federal Register** at 67 FR 71595 and no comments were received. NSF is forwarding the proposed submission to the Office of Management and Budget (OMB) for clearance simultaneously with the publication of this second notice.

DATES: Comments regarding these information collections are best assured of having their full effect if received by OMB within 30 days of publication in the **Federal Register**.

ADDRESSES: Written comments regarding (a) whether the collection of information is necessary for the proper performance of the functions of NSF, including whether the information will have practical utility; (b) the accuracy of NSF's estimate of burden including the validity of the methodology and assumptions used; (c) ways to enhance the quality, utility and clarity of the information to be collected; or (d) ways to minimize the burden of the collection of information on those who are to respond, including through the use of appropriate automated, electronic, mechanical, or other technological collection techniques or other forms of information technology should be addressed to: Office of Information and Regulatory Affairs of OMB, Attention: Desk Officer for National Science Foundation, 725–17th Street, NW., Room 10235, Washington, DC 20503, and to Suzanne H. Plimpton, Reports Clearance Officer, National Science Foundation, 4201 Wilson Boulevard, Suite 295, Arlington, Virginia 22230 or send e-mail to *splimpto@nsf.gov.* Copies of the submission may be obtained by calling (703) 292–7556.

FOR FURTHER INFORMATION CONTACT: Suzanne H. Plimpton, NSF Reports Clearance Officer at (703) 292–7556 or send e-mail to *splimpto@nsf.gov.*

An agency may not conduct or sponsor a collection of information

unless the collection of information displays a currently valid OMB control number and the agency informs potential persons who are to respond to the collection of information that such persons are not required to respond to the collection of information unless it displays a currently valid OMB control number.

SUPPLEMENTARY INFORMATION:

Title of Collection: Survey of Earned Doctorates.

OMB Approval Number: 3145–0019.

Type of Request: Intent to seek approval to extend an information collection for three years.

1. *Abstract:* The National Science Foundation Act of 1950, as subsequently amended, includes a statutory charge to ''* * * provide a central clearinghouse for the collection, interpretation, and analysis of data on scientific and engineering resources, and to provide a source of information for policy formulation by other agencies of the Federal Government.'' The Survey of Earned Doctorates is part of an integrated survey system that meets the human resources part of this mission.

The Survey of Earned Doctorates has been conducted continuously since 1958 and is jointly sponsored by six Federal agencies in order to avoid duplication. It is an accurate, timely source of information on our Nation's most precious resource—highly educated individuals. Data are obtained via paper questionnaire or Web option from each person earning a research doctorate at the time they receive the degree. Data are collected on their field of specialty, educational background, sources of support in graduate school, debt level, postgraduation plans for employment, and demographic characteristics. The Federal government, universities, researchers, and others use the information extensively.

The National Science Foundation, as the lead agency, publishes statistics from the survey in many reports, but primarily in the annual publication series, ''Science and Engineering Doctorates''. The National Opinion Research Corporation at the University of Chicago prepares and disseminates a free interagency report entitled ''Doctorate Recipients from U.S. Universities: Summary Report.'' These reports are available in print and electronically on the World Wide Web.

The survey will be collected in conformance with the Privacy Act of 1974/Confidential Information Protection and Statistical Efficiency Act of 2002. The Federal government considers and NSF states that responses from individuals are voluntary. NSF will insure that all information collected will be kept strictly confidential and will be used only for research or statistical purposes, analyzing data, and preparing scientific reports and articles.

2. *Expected Respondents:* A total response rate of 92% of the total 40,744 persons who earned a research doctorate was obtained in academic year 2000/2001. This level of response rate has been consistent for several years. The respondents will be individuals and the estimated number of respondents annually is 37,485 (based on 2001 data).

3. *Estimate of Burden:* The Foundation estimates that, on average, 19 minutes per respondent will be required to complete the survey, for a total of 11,870 hours for all respondents (37,485 based on the Academic 2000/2001 number). This is reduced by 2,358 hours from the last annual estimate approved by OMB; this reduction is due to a revised, more efficient section on educational history and a declining number of research doctorate recipients since 1998.

Dated: February 20, 2003.

Suzanne H. Plimpton,

Reports Clearance Officer, National Science Foundation.

[FR Doc. 03–4452 Filed 2–25–03; 8:45 am]

BILLING CODE 7555–01–M

NATIONAL SCIENCE FOUNDATION

Agency Information Collection Activities: Proposed Collection; Comment Request

AGENCY: National Science Foundation.

ACTION: Submission for OMB review; comment request.

SUMMARY: Under the Paperwork Reduction Act of 1995, Pub. L. 104–13 (44 U.S.C. 3501 *et seq.*), and as part of its continuing effort to reduce paperwork and respondent burden, the National Science Foundation (NSF) is inviting the general public and other Federal agencies to comment on this proposed continuing information collection. This is the second notice for public comment; the first was published in the **Federal Register** at 67 FR 16454 and no comments were received. NSF is forwarding the proposed submission to the Office of Management and Budget (OMB) for clearance simultaneously with the publication of this second notice.

DATES: Comments regarding these information collections are best assured of having their full effect if received by OMB within 30 days of publication in the **Federal Register.**

ADDRESSES: Written comments regarding (a) Whether the collection of information is necessary for the proper performance of the functions of NSF, including whether the information will have practical utility; (b) the accuracy of NSF's estimate of burden including the validity of the methodology and assumptions used; (c) ways to enhance the quality, utility and clarity of the information to be collected; or (d) ways to minimize the burden of the collection of information on those who are to respond, including through the use of appropriate automated, electronic,, mechanical, or other technological collection techniques or other forms of information technology should be addressed to: Office of Information and Regulatory Affairs of OMB, Attention: Desk Officer for National Science Foundation, 725 17th Street, NW., Room 10235, Washington, DC 20503, and to Suzanne H. Plimpton, Reports Clearance Officer, National Science Foundation, 4201 Wilson Boulevard, Suite 295, Arlington, Virginia 22230 or send e-mail to *splimpto@nsf.gov*. Copies of the submission may be obtained by calling (703) 292–7556.

FOR FURTHER INFORMATION CONTACT: Suzanne H. Plimpton, NSF Reports Clearance Officer at (703) 292–7556 or send e-mail to *splimpto@nsf.gov*.

An agency may not conduct or sponsor a collection of information unless the collection of information displays a currently valid OMB control number and the agency informs potential persons who are to respond to the collection of information that such persons are not required to respond to the collection of information unless it displays a currently valid OMB control number.

SUPPLEMENTARY INFORMATION:

Title of Collection: Quantitative Evaluation for the National Science Foundation's Centers for Learning and Teaching.

OMB Control No.: 3145–(new).

1. *Abstract:* This document has been prepared to support the clearance of data collection instruments to be used in the evaluation of the National Science Foundations's (NSF) Centers for Learning and Teaching (CLT). The CLT program calls for a systematic approach to the development and enhancement of the instructional workforce (kindergarten through graduate school) where professionals are educated in an environment of research and practice. For science, technology, engineering and mathematics (STEM) educators, a Center will provide opportunities to enhance content knowledge, develop teaching strategies that lead to improved

student learning, facilitate the implementation of high quality instructional materials and information technology, and develop skills in using various strategies for assessing student learning. For graduate students, post-doctoral students, and interns, a Center will provide study and research opportunities with the goal of improving learning, teaching, and assessment across the educational continuum.

CLT centers are funded as Elementary, Secondary, and Informal Education (ESIE) Centers, or Higher Education Centers. The goals of the ESIE Centers include (1) Increasing the numbers of K–12 STEM educators in both formal and informal settings who have current content knowledge, implement standards-based instruction, and use information technology as an aid to learning; (2) rebuilding and diversifying the human resource base that forms the national infrastructure for STEM, including basic and advanced education for graduate and post-doctoral students who will specialize in STEM education; and (3) providing substantive opportunities for research into the nature of learning, teaching, and educational reform. The goals of the Higher Education Centers address (1) Increasing the numbers of STEM faculty who implement effective teaching practice and assessment; (2) providing professional development for graduate and post-doctoral student in STEM disciplines to develop their skills as educators and to develop graduate programs in STEM education in disciplinary departments; and (3) providing substantive opportunities for research into the nature of learning, teaching, and educational reform in higher education.

This study addresses the following research questions: In what ways and to what extent are CLTs reflecting the models proposed? To what extent are the CLT centers meeting the goals of the CLT program? What is the value-added of creating CLTs for the achievement of the desired educational outcomes? To what extent does the portfolio of CLT activities appropriately meet national STEM ecuation needs?

The data to address these questions will be gathered via surveys of the following groups: CLT faculty; CLT graduate students; CLT postdoctoral participants: CLT project directors; representatives of IHE partners; and participating K–12 teachers. All the surveys will be sample surveys with the exception of the project director survey, which will be the population. The evaluation surveys will build on the annual data collected from projects for the purpose of GPRA.

In addition to the surveys, a number of small site-specific studies will be conducted to examine the outcomes of various Center activities (*e.g.,* new teacher preparation programs, new courses and curricula, professional development for faculty and K–12 teachers). Meta analysis techniques will be employed to calculate effect sizes across similar studies.

2. *Expected Respondents:* The expected respondents are: CLT faculty; CLT graduate students; CLT postdoctoral participants: CLT project directors; representatives of IHE partners; and participating K–12 teachers.

3. *Burden on the Public:* The total estimate for this collection is 237.5 burden hours for a maximum of 360 participants assuming a 100% response rate. The burden on the public is negligible; the study is limited to project participants that have received funding from the NSF CLT program.

Dated: February 20, 2003.

Suzanne H. Plimpton,

Reports Clearance Officer, National Science Foundation.

[FR Doc. 03–4453 Filed 2–25–03; 8:45 am]

BILLING CODE 7555–01–M

NATIONAL SCIENCE FOUNDATION

Agency Information Collection Activities: Proposed Collection; Comment Request

AGENCY: National Science Foundation.

ACTION: Submission for OMB review; comment request.

SUMMARY: Under the Paperwork Reduction Act of 1995, Pub. L. 104–13 (44 U.S.C. 3501 *et seq.*), and as part of its continuing effort to reduce paperwork and respondent burden, the National Science Foundation (NSF) is inviting the general public and other Federal agencies to comment on this proposed continuing information collection. This is the second notice for public comment; the first was published in the **Federal Register** at 67 FR 72981 and no comments were received. NSF is forwarding the proposed submission to the Office of Management and Budget (OMB) for clearance simultaneously with the publication of this second notice.

DATES: Comments regarding these information collections are best assured of having their full effect if received by OMB within 30 days of publication in the **Federal Register.**

ADDRESSES: Written comments regarding (a) Whether the collection of information is necessary for the proper performance of the functions of NSF, including whether the information will have practical utility; (b) the accuracy of NSF's estimate of burden including the validity of the methodology and assumptions used; (c) ways to enhance the quality, utility and clarity of the information to be collected; or (b) ways to minimize the burden of the collection of information on those who are to respond, including through the use of appropriate automated, electronic, mechanical, or other technological collection techniques or other forms of information technology should be addressed to: Office of Information and Regulatory Affairs of OMB, Attention: Desk Officer for National Science Foundation, 725 17th Street, NW., Room 10235, Washington, DC 20503, and to Suzanne H. Plimpton, Reports Clearance Officer, National Science Foundation, 4201 Wilson Boulevard, Suite 295, Arlington, Virginia 22230 or send e-mail to *splimpto@nsf.gov.* Copies of the submission may be obtained by calling (703) 292–7556.

FOR FURTHER INFORMATION CONTACT: Suzanne H. Plimpton, NSF Reports Clearance Officer at (703) 292–7556 or send e-mail to *splimpto@nsf.gov.*

An agency may not conduct or sponsor a collection of information unless the collection of information displays a currently valid OMB control number and the agency informs potential persons who are to respond to the collection of information that such persons are not required to respond to the collection of information unless it displays a currently valid OMB control number.

SUPPLEMENTARY INFORMATION:

Title of Collection: 2003 and 2005 Survey of Scientific and Engineering Research Facilities.

Type of Request: Intent to seek approval to reinstate, with revisions, an information collection for three years.

Proposed Project: The National Science Foundation Survey of Scientific and Engineering Research Facilities is a Congressionally mandated (Pub. L. 99–159), biennial survey that has been conducted since 1986. The survey collects data on the amount, condition, and costs of the physical facilities used to conduct science and engineering research. It was expected by Congress that this survey would provide the data necessary to describe the status and needs of science and engineering research facilities and to formulate appropriate solutions to documented needs. During the 1999 and 2001 survey

cycles, data were collected from a population of approximately 600 research-performing colleges and universities. This survey population was supplemented with approximately 250 nonprofit biomedical research institutions receiving research support from the National Institutes of Health. During the 2001 cycle, a very limited survey consisting of two questions was fielded in order to allow the National Science Foundation to focus on updating and redesigning the survey. Through this extensive redesign effort, a new section has been added to the survey requesting information on the computing and networking capacity at the surveyed institutions, an increasingly important part of the infrastructure for science and engineering research. Other important changes include the deletion of a question on the adequacy of research space, the deletion of the Large Facilities Follow-up Survey, the additional collection of data on individual construction projects and the addition of a more detailed question on how research space is divided among laboratories, laboratory support space, and office space.

Use of the Information: Analysis of the Facilities Survey data will provide updated information on the status of scientific and engineering research facilities. The information can be used by Federal policy makers, planners, and budget analysts in making policy decisions, as well as by academic officials, the scientific/engineering establishment, and state agencies that fund universities.

Burden on the Public: Approximately 21,983 hours.

Dated: February 20, 2003.

Suzanne H. Plimpton,

Reports Clearance Officer, National Science Foundation.

[FR Doc. 03–4454 Filed 2–25–03; 8:45 am]

BILLING CODE 7555–01–M

NUCLEAR REGULATORY COMMISSION

[Docket No. 70–27; License No. SNM–42]

BWX Technologies, Inc., Lynchburg, VA; Order Modifying License (Effective Immediately)

I

BWX Technologies, Inc. (BWXT) is the holder of Special Nuclear Material License No. SNM–42 issued by the U.S. Nuclear Regulatory Commission (NRC or Commission) pursuant to 10 CFR Part 70. BWXT is authorized by their license to receive, possess, and transfer byproduct, source material, and special nuclear material in accordance with the Atomic Energy Act of 1954, as amended, and 10 CFR Part 70. The BWXT license, originally issued on August 22, 1956, was renewed on October 1, 1995. The license is due to expire on September 30, 2005.

II

On September 11, 2001, terrorists simultaneously attacked targets in New York, NY, and Washington, DC, utilizing large commercial aircraft as weapons. In response to the attacks and intelligence information subsequently obtained, the Commission issued a number of Safeguards and Threat Advisories to its licensees in order to strengthen licensees' capabilities and readiness to respond to a potential attack on a nuclear facility. The Commission has also communicated with other Federal, State and local government agencies and industry representatives to discuss and evaluate the current threat environment in order to assess the adequacy of security measures at licensed facilities. In addition, the Commission has been conducting a comprehensive review of its safeguards and security programs and requirements.

As a result of its consideration of current safeguards and security plan requirements, as well as a review of information provided by the intelligence community, the Commission has determined that certain compensatory measures are required to be implemented by BWXT as prudent, interim measures to address the current threat environment. Therefore, the Commission is imposing interim requirements, set forth in Attachment 1 [1] of this Order, which supplement existing regulatory requirements, to provide the Commission with reasonable assurance that the public health and safety and common defense and security continue to be adequately protected in the current threat environment. These requirements will remain in effect until the Commission determines otherwise.

The Commission recognizes that some of the requirements set forth in Attachment 1 [2] to this Order may already have been initiated by BWXT in response to previously-issued advisories, or on its own. It is also recognized that some measures may need to be tailored to specifically accommodate the specific circumstances and characteristics existing at BWXT's facility to achieve the intended objectives and avoid any unforeseen effect on safe operation.

Although BWXT's response to the Safeguards and Threat Advisories has been adequate to provide reasonable assurance of adequate protection of public health and safety, in light of the current threat environment, the Commission concludes that the security measures must be embodied in an Order, consistent with the established regulatory framework. In order to provide assurance that BWXT is implementing prudent measures to achieve an adequate level of protection to address the current threat environment, Materials License SNM–42 shall be modified to include the requirements identified in Attachment 1 to this Order. In addition, pursuant to 10 CFR 2.202 and 70.81, I find that, in the circumstances described above, the public health, safety and interest and the common defense and security require that this Order be immediately effective.

III

Accordingly, pursuant to Sections 53, 63, 81, 161b, 161i, 161o, 182 and 186 of the Atomic Energy Act of 1954, as amended, and the Commission's regulations in 10 CFR 2.202 and 10 CFR Part 70, *it is hereby ordered, effective immediately, that material license SNM–42 is modified as follows:*

A. BWXT shall, notwithstanding the provisions of any Commission regulation to the contrary, comply with the requirements described in Attachment 1 to this Order. BWXT shall immediately start implementation of the requirements in Attachment 1 to the Order and shall complete implementation, unless otherwise specified in Attachment 1 to this order, *no later than August 15, 2003.*

B. 1. BWXT shall, within *twenty (20) days* of the date of this Order, notify the Commission, (1) if it is unable to comply with any of the requirements described in Attachment 1, (2) if compliance with any of the requirements is unnecessary in its specific circumstances, or (3) if implementation of any of the requirements would cause BWXT to be in violation of the provisions of any Commission regulation or its license. The notification shall provide BWXT's justification for seeking relief from or variation of any specific requirement.

[1] Attachment 1 contains safeguards information and will not be released to the public.

[2] To the extent that specific measures identified in Attachment 1 to this Order require actions pertaining to BWXT's possession and use of chemicals, such actions are being directed on the basis of the potential impact of such chemicals on radioactive materials and activities subject to NRC regulation.

2. If BWXT considers that implementation of any of the requirements described in Attachment 1 to this Order would adversely impact safe operation of its facility, BWXT must notify the Commission, within *twenty (20) days* of this Order, of the adverse safety impact, the basis for its determination that the requirement has an adverse safety impact, and either a proposal for achieving the same objectives specified in the Attachment 1 requirement in question, or a schedule for modifying the facilities to address the adverse safety condition. If neither approach is appropriate, BWXT must supplement its response to Condition B1 of this Order to identify the condition as a requirement with which it cannot comply, with attendant justifications as required in Condition B1.

C. 1. BWXT shall, within *twenty (20) days* of the date of this Order, submit to the Commission, a schedule for achieving compliance with each requirement described in Attachment 1.

2. BWXT shall report to the Commission when it has achieved full compliance with the requirements described in Attachment 1.

D. Notwithstanding any provision of the Commission's regulations to the contrary, all measures implemented or actions taken in response to this Order shall be maintained until the Commission determines otherwise.

BWXT's responses to Conditions B.1, B.2, C.1, and C.2, above shall be submitted in accordance with 10 CFR 70.5. In addition, BWXT's submittals that contain safeguards information shall be properly marked and handled in accordance with 10 CFR 73.21.

The Director, Office of Nuclear Material Safety and Safeguards, may, in writing, relax or rescind any of the above conditions upon demonstration by BWXT of good cause.

IV

In accordance with 10 CFR 2.202, the licensee must, and any other person adversely affected by this Order may, submit an answer to this Order, and may request a hearing on this Order, within twenty (20) days of the date of this Order. Where good cause is shown, consideration will be given to extending the time to request a hearing. A request for extension of time in which to submit an answer or request a hearing must be made in writing to the Director, Office of Nuclear Material Safety and Safeguards, U.S. Nuclear Regulatory Commission, Washington, DC 20555, and include a statement of good cause for the extension. The answer may consent to this Order. Unless the answer consents to this Order, the answer shall, in writing and under oath or affirmation, specifically set forth the matters of fact and law on which the licensee or other person adversely affected relies and the reasons as to why the Order should not have been issued. Any answer or request for a hearing shall be submitted to the Secretary, Office of the Secretary of the Commission, U.S. Nuclear Regulatory Commission, ATTN: Rulemakings and Adjudications Staff, Washington, DC 20555. Copies also shall be sent to the Director, Office of Nuclear Material Safety and Safeguards, U.S. Nuclear Regulatory Commission, Washington, DC 20555, to the Assistant General Counsel for Materials Litigation and Enforcement at the same address, to the Regional Administrator, NRC Region II, Sam Nunn Atlanta Federal Center , Suite 23 T85, 61 Forsyth Street, SW. Atlanta, GA 30303–3415, and to BWXT if the answer or hearing request is by a person other than the licensee. Because of possible disruptions in delivery of mail to United States Government offices, it is requested that answers and requests for hearing be transmitted to the Secretary of the Commission either by means of facsimile transmission to 301–415–1101 or by e-mail to *hearingdocket@nrc.gov* and also to the Office of the General Counsel either by means of facsimile transmission to 301–415–3725 or by e-mail to *OGCMailCenter@nrc.gov.* If a person other than the licensee requests a hearing, that person shall set forth with particularity the manner in which his interest is adversely affected by this Order and shall address the criteria set forth in 10 CFR 2.714(d).[3]

If a hearing is requested by the licensee or a person whose interest is adversely affected, the Commission will issue an Order designating the time and place of any hearing. If a hearing is held, the issue to be considered at such hearing shall be whether this Order should be sustained.

Pursuant to 10 CFR 2.202(c)(2)(i), the licensee may, in addition to demanding a hearing, at the time the answer is filed or sooner, move the presiding officer to set aside the immediate effectiveness of the Order on the ground that the Order, including the need for immediate effectiveness, is not based on adequate evidence but on mere suspicion, unfounded allegations, or error.

In the absence of any request for hearing, or written approval of an extension of time in which to request a hearing, the provisions specified in Section III above shall be final twenty (20) days from the date of this Order without further order or proceedings. If an extension of time for requesting a hearing has been approved, the provisions specified in Section III shall be final when the extension expires if a hearing request has not been received. *An answer or a request for hearing shall not stay the immediate effectiveness of this order.*

For the Nuclear Regulatory Commission.

Dated this 6th day of February 2003.

Martin J. Virgilio,

Director, Office of Nuclear Material Safety and Safeguards.

[FR Doc. 03–4535 Filed 2–25–03; 8:45 am]

BILLING CODE 7590–01–P

[3] The most recent version of Title 10 of the Code of Federal Regulations, published January 1, 2002, inadvertently omitted the last sentence of 10 CFR 2.714(d) and subparagraphs (d)(1) and (2), regarding petitions to intervene and contentions. For the complete, corrected text of 10 CFR 2.714(d), please see 67 FR 20884; April 29, 2002.

NUCLEAR REGULATORY COMMISSION

[Docket No. 70–1201; License No. SNM–1168]

In the Matter of: Framatome Advanced Nuclear Power, Inc., Lynchburg, VA; Order Modifying License (Effective Immediately)

I

Framatome Advanced Nuclear Power, Inc. Lynchburg (Framatome ANP Lynchburg) is the holder of Special Nuclear Material License No. SNM 1168 issued by the U.S. Nuclear Regulatory (NRC or Commission) pursuant to 10 CFR part 70. Framatome ANP Lynchburg is authorized by their license to receive, possess, and transfer byproduct, source material, and special nuclear material in accordance with the Atomic Energy Act of 1954, as amended, and 10 CFR part 70. The Framatome ANP Lynchburg license, originally issued in December 1969, was renewed in September 1990. The license is currently being reviewed for renewal until 2012.

II

On September 11, 2001, terrorists simultaneously attacked targets in New York, NY, and Washington, DC, utilizing large commercial aircraft as weapons. In response to the attacks and intelligence information subsequently obtained, the Commission issued a number of Safeguards and Threat Advisories to its licensees in order to strengthen licensees' capabilities and readiness to respond to a potential attack on a nuclear facility. The Commission has also communicated

with other Federal, State and local government agencies and industry representatives to discuss and evaluate the current threat environment in order to assess the adequacy of security measures at licensed facilities. In addition, the Commission has been conducting a comprehensive review of its safeguards and security programs and requirements.

As a result of its consideration of current safeguards and security plan requirements, as well as a review of information provided by the intelligence community, the Commission has determined that certain compensatory measures are required to be implemented by Framatome ANP Lynchburg as prudent, interim measures to address the current threat environment. Therefore, the Commission is imposing interim requirements, set forth in Attachment 1 [1] of this Order, which supplement existing regulatory requirements, to provide the Commission with reasonable assurance that the public health and safety and common defense and security continue to be adequately protected in the current threat environment. These requirements will remain in effect until the Commission determines otherwise.

The Commission recognizes that some of the requirements set forth in Attachment 1 [2] to this Order may already have been initiated by Framatome ANP Lynchburg in response to previously-issued advisories, or on its own. It is also recognized that some measures may need to be tailored to specifically accommodate the specific circumstances and characteristics existing at Framatome ANP Lynchburg's facility to achieve the intended objectives and avoid any unforeseen effect on safe operation.

Although Framatome ANP Lynchburg's response to the Safeguards and Threat Advisories has been adequate to provide reasonable assurance of adequate protection of public health and safety, in light of the current threat environment, the Commission concludes that the security measures must be embodied in an Order, consistent with the established regulatory framework. In order to provide assurance that Framatome ANP Lynchburg is implementing prudent measures to achieve an adequate level of protection to address the current threat environment, Materials License SNM–1168 shall be modified to include the requirements identified in Attachment 1 to this Order. In addition, pursuant to 10 CFR 2.202 and 70.81, I find that, in the circumstances described above, the public health, safety and interest and the common defense and security require that this Order be immediately effective.

III

Accordingly, pursuant to sections 53, 63, 81, 161b, 161i, 161o, 182 and 186 of the Atomic Energy Act of 1954, as amended, and the Commission's regulations in 10 CFR 2.202 and 10 CFR part 70, *It is hereby ordered, effective immediately,* that Material License SNM–1168 is modified as follows:

A. Framatome ANP Lynchburg shall, notwithstanding the provisions of any Commission regulation to the contrary, comply with the requirements described in Attachment 1 to this Order. Framatome ANP Lynchburg shall immediately start implementation of the requirements in Attachment 1 to the Order and shall complete implementation, unless otherwise specified in Attachment 1 to this order, no later than August 15, 2003.

B. 1. Framatome ANP Lynchburg shall, within twenty (20) days of the date of this Order, notify the Commission, (1) if it is unable to comply with any of the requirements described in Attachment 1, (2) if compliance with any of the requirements is unnecessary in its specific circumstances, or (3) if implementation of any of the requirements would cause Framatome ANP Lynchburg to be in violation of the provisions of any Commission regulation or its license. The notification shall provide Framatome ANP Lynchburg's justification for seeking relief from or variation of any specific requirement.

2. If Framatome ANP Lynchburg considers that implementation of any of the requirements described in Attachment 1 to this Order would adversely impact safe operation of its facility, Framatome ANP Lynchburg must notify the Commission, within twenty (20) days of this Order, of the adverse safety impact, the basis for its determination that the requirement has an adverse safety impact, and either a proposal for achieving the same objectives specified in the Attachment 1 requirement in question, or a schedule for modifying the facilities to address the adverse safety condition. If neither approach is appropriate, Framatome ANP Lynchburg must supplement its response to Condition B1 of this Order to identify the condition as a requirement with which it cannot comply, with attendant justifications as required in Condition B1.

C. 1. Framatome ANP Lynchburg shall, within twenty (20) days of the date of this Order, submit to the Commission, a schedule for achieving compliance with each requirement described in Attachment 1.

2. Framatome ANP Lynchburg shall report to the Commission when it has achieved full compliance with the requirements described in Attachment 1.

D. Notwithstanding any provision of the Commission's regulations to the contrary, all measures implemented or actions taken in response to this Order shall be maintained until the Commission determines otherwise.

Framatome ANP Lynchburg's responses to Conditions B.1, B.2, C.1, and C.2, above shall be submitted in accordance with 10 CFR 70.5. In addition, Framatome ANP Lynchburg's submittals that contain safeguards information shall be properly marked and handled in accordance with 10 CFR 73.21.

The Director, Office of Nuclear Material Safety and Safeguards, may, in writing, relax or rescind any of the above conditions upon demonstration by Framatome ANP Lynchburg of good cause.

IV

In accordance with 10 CFR 2.202, the licensee must, and any other person adversely affected by this Order may, submit an answer to this Order, and may request a hearing on this Order, within twenty (20) days of the date of this Order. Where good cause is shown, consideration will be given to extending the time to request a hearing. A request for extension of time in which to submit an answer or request a hearing must be made in writing to the Director, Office of Nuclear Material Safety and Safeguards, U.S. Nuclear Regulatory Commission, Washington, DC 20555, and include a statement of good cause for the extension. The answer may consent to this Order. Unless the answer consents to this Order, the answer shall, in writing and under oath or affirmation, specifically set forth the matters of fact and law on which the licensee or other person adversely affected relies and the reasons as to why the Order should not have been issued. Any answer or request for a hearing shall be submitted to the Secretary, Office of the Secretary of the Commission, U.S. Nuclear Regulatory

[1] Attachment 1 contains safeguards information and will not be released to the public.

[2] To the extent that specific measures identified in Attachment 1 to this Order require actions pertaining to Framatome ANP Lynchburg's possession and use of chemicals, such actions are being directed on the basis of the potential impact of such chemicals on radioactive materials and activities subject to NRC regulation.

Commission, ATTN: Rulemakings and Adjudications Staff, Washington, DC 20555. Copies also shall be sent to the Director, Office of Nuclear Material Safety and Safeguards, U.S. Nuclear Regulatory Commission, Washington, DC 20555, to the Assistant General Counsel for Materials Litigation and Enforcement at the same address, to the Regional Administrator, NRC Region II, Sam Nunn Atlanta Federal Center , Suite 23 T85, 61 Forsyth Street, SW. Atlanta, GA 30303–3415, and to Framatome ANP Lynchburg if the answer or hearing request is by a person other than the licensee. Because of possible disruptions in delivery of mail to United States Government offices, it is requested that answers and requests for hearing be transmitted to the Secretary of the Commission either by means of facsimile transmission to 301–415–1101 or by e-mail to *hearingdocket@nrc.gov* and also to the Office of the General Counsel either by means of facsimile transmission to 301–415–3725 or by e-mail to *OGCMailCenter@nrc.gov.* If a person other than the licensee requests a hearing, that person shall set forth with particularity the manner in which his interest is adversely affected by this Order and shall address the criteria set forth in 10 CFR 2.714(d).[3]

If a hearing is requested by the licensee or a person whose interest is adversely affected, the Commission will issue an Order designating the time and place of any hearing. If a hearing is held, the issue to be considered at such hearing shall be whether this Order should be sustained.

Pursuant to 10 CFR 2.202(c)(2)(i), the licensee may, in addition to demanding a hearing, at the time the answer is filed or sooner, move the presiding officer to set aside the immediate effectiveness of the Order on the ground that the Order, including the need for immediate effectiveness, is not based on adequate evidence but on mere suspicion, unfounded allegations, or error.

In the absence of any request for hearing, or written approval of an extension of time in which to request a hearing, the provisions specified in Section III above shall be final twenty (20) days from the date of this Order without further order or proceedings. If an extension of time for requesting a hearing has been approved, the provisions specified in Section III shall be final when the extension expires if a hearing request has not been received. An answer or a request for hearing *shall not stay* the immediate effectiveness of this order.

Dated this 6th day of February, 2003.

For the Nuclear Regulatory Commission:

Martin J. Virgilio,

Director, Office of Nuclear Material Safety and Safeguards.

[FR Doc. 03–4533 Filed 2–25–03; 8:45 am]

BILLING CODE 7590–01–P

[3] The most recent version of Title 10 of the Code of Federal Regulations, published January 1, 2002, inadvertently omitted the last sentence of 10 CFR 2.714(d) and subparagraphs (d)(1) and (2), regarding petitions to intervene and contentions. For the complete, corrected text of 10 CFR 2.714(d), please see 67 FR 20884, April 29, 2002.

NUCLEAR REGULATORY COMMISSION

[Docket No. 70–1257; License No. SNM–1227]

In the Matter of Framatome Advanced Nuclear Power, Inc., Richland, Washington; Order Modifying License (Effective Immediately)

I

Framatome Advanced Nuclear Power, Inc. (Framatome ANP) Richland is the holder of Special Nuclear Material License No. SNM 1227 issued by the U.S. Nuclear Regulatory (NRC or Commission) pursuant to 10 CFR part 70. Framatome ANP Richland is authorized by their license to receive, possess, and transfer special nuclear material in accordance with the Atomic Energy Act of 1954, as amended, and 10 CFR part 70. The Framatome ANP Richland license, originally issued on December 14, 1970, was last renewed on November 15, 1996, and is due to expire on November 30, 2006.

II

On September 11, 2001, terrorists simultaneously attacked targets in New York, NY, and Washington, DC, utilizing large commercial aircraft as weapons. In response to the attacks and intelligence information subsequently obtained, the Commission issued a number of Safeguards and Threat Advisories to its licensees in order to strengthen licensees' capabilities and readiness to respond to a potential attack on a nuclear facility. The Commission has also communicated with other Federal, State and local government agencies and industry representatives to discuss and evaluate the current threat environment in order to assess the adequacy of security measures at licensed facilities. In addition, the Commission has been conducting a comprehensive review of its safeguards and security programs and requirements.

As a result of its consideration of current safeguards and security plan requirements, as well as a review of information provided by the intelligence community, the Commission has determined that certain compensatory measures are required to be implemented by Framatome ANP Richland as prudent, interim measures to address the current threat environment. Therefore, the Commission is imposing interim requirements, set forth in Attachment 1[1] of this Order, which supplement existing regulatory requirements, to provide the Commission with reasonable assurance that the public health and safety and common defense and security continue to be adequately protected in the current threat environment. These requirements will remain in effect until the Commission determines otherwise.

The Commission recognizes that some of the requirements set forth in Attachment 1[2] to this Order may already have been initiated by Framatome ANP Richland in response to previously-issued advisories, or on its own. It is also recognized that some measures may need to be tailored to specifically accommodate the specific circumstances and characteristics existing at Framatome ANP Richland's facility to achieve the intended objectives and avoid any unforeseen effect on safe operation.

Although Framatome ANP Richland's response to the Safeguards and Threat Advisories has been adequate to provide reasonable assurance of adequate protection of public health and safety, in light of the current threat environment, the Commission concludes that the security measures must be embodied in an Order, consistent with the established regulatory framework. In order to provide assurance that Framatome ANP Richland is implementing prudent measures to achieve an adequate level of protection to address the current threat environment, Materials License SNM–1227 shall be modified to include the requirements identified in Attachment 1 to this Order. In addition, pursuant to 10 CFR 2.202 and 70.81, I find that, in the circumstances described above, the public health, safety and interest and the common defense and security require that this Order be immediately effective.

[1] Attachment 1 contains safeguards information and will not be released to the public.

[2] To the extent that specific measures identified in Attachment 1 to this Order require actions pertaining to Framatome ANP Richland's possession and use of chemicals, such actions are being directed on the basis of the potential impact of such chemicals on radioactive materials and activities subject to NRC regulation.

III

Accordingly, pursuant to sections 53, 63, 81, 161b, 161i, 161o, 182 and 186 of the Atomic Energy Act of 1954, as amended, and the Commission's regulations in 10 CFR 2.202 and 10 CFR part 70, *it is hereby ordered,* effective immediately, that Material License SNM–1227 is modified as follows:

A. Framatome ANP Richland shall, notwithstanding the provisions of any Commission regulation to the contrary, comply with the requirements described in Attachment 1 to this Order. Framatome ANP Richland shall immediately start implementation of the requirements in Attachment 1 to the Order and shall complete implementation, unless otherwise specified in Attachment 1 to this order, no later than August 15, 2003.

B. 1. Framatome ANP Richland shall, within 20 days of the date of this Order, notify the Commission, (1) if it is unable to comply with any of the requirements described in Attachment 1, (2) if compliance with any of the requirements is unnecessary in its specific circumstances, or (3) if implementation of any of the requirements would cause Framatome ANP Richland to be in violation of the provisions of any Commission regulation or its license. The notification shall provide Framatome ANP Richland's justification for seeking relief from or variation of any specific requirement.

2. If Framatome ANP Richland considers that implementation of any of the requirements described in Attachment 1 to this Order would adversely impact safe operation of its facility, Framatome ANP Richland must notify the Commission, within 20 days of this Order, of the adverse safety impact, the basis for its determination that the requirement has an adverse safety impact, and either a proposal for achieving the same objectives specified in the Attachment 1 requirement in question, or a schedule for modifying the facilities to address the adverse safety condition. If neither approach is appropriate, Framatome ANP Richland must supplement its response to Condition B1 of this Order to identify the condition as a requirement with which it cannot comply, with attendant justifications as required in Condition B1.

C. 1. Framatome ANP Richland shall, within 20 days of the date of this Order, submit to the Commission, a schedule for achieving compliance with each requirement described in Attachment 1.

2. Framatome ANP Richland shall report to the Commission when it has achieved full compliance with the requirements described in Attachment 1.

D. Notwithstanding any provision of the Commission's regulations to the contrary, all measures implemented or actions taken in response to this Order shall be maintained until the Commission determines otherwise.

Framatome ANP Richland's responses to Conditions B.1, B.2, C.1, and C.2, above shall be submitted in accordance with 10 CFR 70.5. In addition, Framatome ANP Richland's submittals that contain safeguards information shall be properly marked and handled in accordance with 10 CFR 73.21.

The Director, Office of Nuclear Material Safety and Safeguards, may, in writing, relax or rescind any of the above conditions upon demonstration by Framatome ANP Richland of good cause.

IV

In accordance with 10 CFR 2.202, the licensee must, and any other person adversely affected by this Order may, submit an answer to this Order, and may request a hearing on this Order, within 20 days of the date of this Order. Where good cause is shown, consideration will be given to extending the time to request a hearing. A request for extension of time in which to submit an answer or request a hearing must be made in writing to the Director, Office of Nuclear Material Safety and Safeguards, U.S. Nuclear Regulatory Commission, Washington, DC 20555, and include a statement of good cause for the extension. The answer may consent to this Order. Unless the answer consents to this Order, the answer shall, in writing and under oath or affirmation, specifically set forth the matters of fact and law on which the licensee or other person adversely affected relies and the reasons as to why the Order should not have been issued. Any answer or request for a hearing shall be submitted to the Secretary, Office of the Secretary of the Commission, U.S. Nuclear Regulatory Commission, ATTN: Rulemakings and Adjudications Staff, Washington, DC 20555. Copies also shall be sent to the Director, Office of Nuclear Material Safety and Safeguards, and the Director, Office of Enforcement, U.S. Nuclear Regulatory Commission, Washington, DC 20555, to the Assistant General Counsel for Materials Litigation and Enforcement, at the same address, to the Regional Administrator, NRC Region IV, 611 Ryan Plaza Drive, Suite 400, Arlington, TX 76011–8064, and to Framatome ANP Richland if the answer or hearing request is by a person other than Framatome ANP Richland. Because of possible disruptions in delivery of mail to United States Government offices, it is requested that answers and requests for hearing be transmitted to the Secretary of the Commission either by means of facsimile transmission to 301–415–1101 or by e-mail to *hearingdocket@nrc.gov* and also to the Office of the General Counsel either by means of facsimile transmission to 301–415–3725 or by e-mail to *OGCMailCenter@nrc.gov.*

If a person other than the licensee requests a hearing, that person shall set forth with particularity the manner in which his interest is adversely affected by this Order and shall address the criteria set forth in 10 CFR 2.714(d).[3]

If a hearing is requested by Framatome ANP Richland or a person whose interest is adversely affected, the Commission will issue an Order designating the time and place of any hearing. If a hearing is held, the issue to be considered at such hearing shall be whether this Order should be sustained.

Pursuant to 10 CFR 2.202(c)(2)(i), Framatome ANP Richland may, in addition to demanding a hearing, at the time the answer is filed or sooner, move to set aside the immediate effectiveness of the Order on the ground that the Order, including the need for immediate effectiveness, is not based on adequate evidence but on mere suspicion, unfounded allegations, or error.

In the absence of any request for hearing, or written approval of an extension of time in which to request a hearing, the provisions specified in section III above shall be final 20 days from the date of this Order without further order or proceedings. If an extension of time for requesting a hearing has been approved, the provisions specified in section III shall be final when the extension expires if a hearing request has not been received. *An answer or a request for hearing shall not stay* the immediate effectiveness of this Order.

Dated this 6th day of February, 2003.

For the Nuclear Regulatory Commission.

Martin J. Virgilio,

Director, Office of Nuclear Material Safety and Safeguards.

[FR Doc. 03–4534 Filed 2–25–03; 8:45 am]

BILLING CODE 7590–01–P

[3] The most recent version of title 10 of the Code of Federal Regulations, published January 1, 2002, inadvertently omitted the last sentence of 10 CFR 2.714(d) and subparagraphs (d)(1) and (2), regarding petitions to intervene and contentions. For the complete, corrected text of 10 CFR 2.714(d), please *see* 67 FR 20884; April 29, 2002.

NUCLEAR REGULATORY COMMISSION

[Docket No. 70–1113; License No. SNM–1097]

Global Nuclear Fuel—Americas, LLC, Wilmington, NC; Order Modifying License (Effective Immediately)

I

Global Nuclear Fuel—Americas, LLC (Global Nuclear) is the holder of Special Nuclear Material License No. SNM 1097 issued by the U.S. Nuclear Regulatory (NRC or Commission) pursuant to 10 CFR Part 70. Global Nuclear is authorized by their license to receive, possess, and transfer special nuclear material in accordance with the Atomic Energy Act of 1954, as amended, and 10 CFR Part 70. The Global Nuclear license, originally issued in January 1969, was last renewed in June 1997, and due to expire in June 2007.

II

On September 11, 2001, terrorists simultaneously attacked targets in New York, NY, and Washington, DC, utilizing large commercial aircraft as weapons. In response to the attacks and intelligence information subsequently obtained, the Commission issued a number of Safeguards and Threat Advisories to its licensees in order to strengthen licensees' capabilities and readiness to respond to a potential attack on a nuclear facility. The Commission has also communicated with other Federal, State and local government agencies and industry representatives to discuss and evaluate the current threat environment in order to assess the adequacy of security measures at licensed facilities. In addition, the Commission has been conducting a comprehensive review of its safeguards and security programs and requirements.

As a result of its consideration of current safeguards and security plan requirements, as well as a review of information provided by the intelligence community, the Commission has determined that certain compensatory measures are required to be implemented by Global Nuclear as prudent, interim measures to address the current threat environment. Therefore, the Commission is imposing interim requirements, set forth in Attachment 1 [1] of this Order, which supplement existing regulatory requirements, to provide the Commission with reasonable assurance that the public health and safety and common defense and security continue to be adequately protected in the current threat environment. These requirements will remain in effect until the Commission determines otherwise.

The Commission recognizes that some of the requirements set forth in Attachment 1 [2] to this Order may already have been initiated by Global Nuclear in response to previously-issued advisories, or on its own. It is also recognized that some measures may need to be tailored to specifically accommodate the specific circumstances and characteristics existing at Global Nuclear's facility to achieve the intended objectives and avoid any unforeseen effect on safe operation.

Although Global Nuclear's response to the Safeguards and Threat Advisories has been adequate to provide reasonable assurance of adequate protection of public health and safety, in light of the current threat environment, the Commission concludes that the security measures must be embodied in an Order, consistent with the established regulatory framework. In order to provide assurance that Global Nuclear is implementing prudent measures to achieve an adequate level of protection to address the current threat environment, Materials License SNM–1097 shall be modified to include the requirements identified in Attachment 1 to this Order. In addition, pursuant to 10 CFR 2.202 and 70.81, I find that, in the circumstances described above, the public health, safety and interest and the common defense and security require that this Order be immediately effective.

III

Accordingly, pursuant to Sections 53, 63, 81, 161b, 161i, 161o, 182 and 186 of the Atomic Energy Act of 1954, as amended, and the Commission's regulations in 10 CFR 2.202 and 10 CFR Part 70, *it is hereby ordered, effective immediately, that material license SNM–1097 is modified as follows:*

A. Global Nuclear shall, notwithstanding the provisions of any Commission regulation to the contrary, comply with the requirements described in Attachment 1 to this Order. Global Nuclear shall immediately start implementation of the requirements in Attachment 1 to the Order and shall complete implementation, unless otherwise specified in Attachment 1 to this order, *no later than August 15, 2003.*

B. 1. Global Nuclear shall, *within twenty (20) days* of the date of this Order, notify the Commission, (1) if it is unable to comply with any of the requirements described in Attachment 1, (2) if compliance with any of the requirements is unnecessary in its specific circumstances, or (3) if implementation of any of the requirements would cause Global Nuclear to be in violation of the provisions of any Commission regulation or its license. The notification shall provide Global Nuclear's justification for seeking relief from or variation of any specific requirement.

2. If Global Nuclear considers that implementation of any of the requirements described in Attachment 1 to this Order would adversely impact safe operation of its facility, Global Nuclear must notify the Commission, within *twenty (20) days* of this Order, of the adverse safety impact, the basis for its determination that the requirement has an adverse safety impact, and either a proposal for achieving the same objectives specified in the Attachment 1 requirement in question, or a schedule for modifying the facilities to address the adverse safety condition. If neither approach is appropriate, Global Nuclear must supplement its response to Condition B1 of this Order to identify the condition as a requirement with which it cannot comply, with attendant justifications as required in Condition B1.

C. 1. Global Nuclear shall, within *twenty (20) days* of the date of this Order, submit to the Commission, a schedule for achieving compliance with each requirement described in Attachment 1.

2. Global Nuclear shall report to the Commission when it has achieved full compliance with the requirements described in Attachment 1.

D. Notwithstanding any provision of the Commission's regulations to the contrary, all measures implemented or actions taken in response to this Order shall be maintained until the Commission determines otherwise.

Global Nuclear's responses to Conditions B.1, B.2, C.1, and C.2, above shall be submitted in accordance with 10 CFR § 70.5. In addition, Global Nuclear's submittals that contain safeguards information shall be properly marked and handled in accordance with 10 CFR § 73.21.

The Director, Office of Nuclear Material Safety and Safeguards, may, in writing, relax or rescind any of the

[1] Attachment 1 contains safeguards information and will not be released to the public.

[2] To the extent that specific measures identified in Attachment 1 to this Order require actions pertaining to Global Nuclear's possession and use of chemicals, such actions are being directed on the basis of the potential impact of such chemicals on radioactive materials and activities subject to NRC regulation.

above conditions upon demonstration by Global Nuclear of good cause.

IV

In accordance with 10 CFR 2.202, the licensee must, and any other person adversely affected by this Order may, submit an answer to this Order, and may request a hearing on this Order, within twenty (20) days of the date of this Order. Where good cause is shown, consideration will be given to extending the time to request a hearing. A request for extension of time in which to submit an answer or request a hearing must be made in writing to the Director, Office of Nuclear Material Safety and Safeguards, U.S. Nuclear Regulatory Commission, Washington, DC 20555, and include a statement of good cause for the extension. The answer may consent to this Order. Unless the answer consents to this Order, the answer shall, in writing and under oath or affirmation, specifically set forth the matters of fact and law on which the licensee or other person adversely affected relies and the reasons as to why the Order should not have been issued. Any answer or request for a hearing shall be submitted to the Secretary, Office of the Secretary of the Commission, U.S. Nuclear Regulatory Commission, ATTN: Rulemakings and Adjudications Staff, Washington, DC 20555. Copies also shall be sent to the Director, Office of Nuclear Material Safety and Safeguards, U.S. Nuclear Regulatory Commission, Washington, DC 20555, to the Assistant General Counsel for Materials Litigation and Enforcement, at the same address, to the Regional Administrator, NRC Region II, Sam Nunn Atlanta Federal Center, Suite 23 T85, 61 Forsyth Street, SW., Atlanta, GA 30303–3415, and to Global Nuclear if the answer or hearing request is by a person other than the licensee. Because of possible disruptions in delivery of mail to United States Government offices, it is requested that answers and requests for hearing be transmitted to the Secretary of the Commission either by means of facsimile transmission to 301–415–1101 or by e-mail to *hearingdocket@nrc.gov* and also to the Office of the General Counsel either by means of facsimile transmission to 301–415–3725 or by e-mail to *OGCMailCenter@nrc.gov.* If a person other than the licensee requests a hearing, that person shall set forth with particularity the manner in which his interest is adversely affected by this Order and shall address the criteria set forth in 10 CFR 2.714(d).[3]

If a hearing is requested by the licensee or a person whose interest is adversely affected, the Commission will issue an Order designating the time and place of any hearing. If a hearing is held, the issue to be considered at such hearing shall be whether this Order should be sustained.

Pursuant to 10 CFR 2.202(c)(2)(i), the licensee may, in addition to demanding a hearing, at the time the answer is filed or sooner, move the presiding officer to set aside the immediate effectiveness of the Order on the ground that the Order, including the need for immediate effectiveness, is not based on adequate evidence but on mere suspicion, unfounded allegations, or error.

In the absence of any request for hearing, or written approval of an extension of time in which to request a hearing, the provisions specified in section III above shall be final twenty (20) days from the date of this Order without further order or proceedings. If an extension of time for requesting a hearing has been approved, the provisions specified in section III shall be final when the extension expires if a hearing request has not been received. *An answer or a request for hearing shall not stay the immediate effectiveness of this Order.*

Dated this 6th day of February, 2003.

For the Nuclear Regulatory Commission.

Martin J. Virgilio,

Director, Office of Nuclear Material Safety and Safeguards.

[FR Doc. 03–4536 Filed 2–25–03; 8:45 am]

BILLING CODE 7590–01–P

[3] The most recent version of Title 10 of the Code of Federal Regulations, published January 1, 2002, inadvertently omitted the last sentence of 10 CFR 2.714(d) and subparagraphs (d)(1) and (2), regarding petitions to intervene and contentions. For the complete, corrected text of 10 CFR 2.714(d), please see 67 FR 20884, April 29, 2002.

NUCLEAR REGULATORY COMMISSION

[Docket No. 40–8857]

Notice of Amendment Request for Proposed Operation of the Gas Hills Project *in situ* Leach Uranium Recovery Facility, Freemont and Natrona Counties, WY, and Opportunity To Provide Comments and To Request a Hearing

I. Introduction

The U. S. Nuclear Regulatory Commission (NRC) has received, by letter dated June 24, 1998, a license amendment application from Power Resources, Inc. (PRI), requesting an amendment to Source Materials License SUA–1511 for the Highland Uranium Project to allow the operation of an *in situ* leach (ISL) uranium recovery facility at the Gas Hills Project site. In order to support the staff's detailed technical review of the license amendment application, the staff requested additional information from PRI in letters dated May 21, 1999, and July 15, 1999. In response to staff requests for additional information, PRI supplemented and revised the license amendment application in letters dated September 24, 1999, November 11, 1999, and May 3, 2002.

The Highland Uranium Project is an existing licensed (Source Materials License SUA–1511) ISL uranium recovery facility located in central Converse County, Wyoming, approximately 24 miles northeast of Glenrock. Source Materials License SUA–1511 for the commercial operation of the Highland Uranium Project was issued on July 1, 1987. The planned Gas Hills Project covers approximately 8500 acres where PRI proposes to operate the Gas Hills Project as a satellite uranium recovery facility to the Highland Uranium Project facility. As a satellite facility, only well-field, ion exchange, and water treatment facilities would be constructed and operated at the Gas Hills Project to support uranium recovery activities. During process operations, uranium will be leached from identified subsurface ore bodies by circulating local groundwater fortified with chemicals through the mineralized zones. The dissolved uranium will be extracted from the uranium-bearing solution at a surface ion exchange facility at the Gas Hills Project. Then, the uranium-laden ion exchange resin will be transported by truck from the Gas Hills Project site to the Highland Uranium Project site for final processing of the uranium into ''yellowcake'' (U_3O_8). The travel distance by road between the Gas Hills Project and the Highland Uranium Project is approximately 140 miles. Water treatment facilities, including evaporation ponds, will be provided at the Gas Hills Project for treatment of wastes from process operations and subsequent well-field groundwater restoration activities.

PRI intends to extract sufficient uranium from the Gas Hills Project to yield as much as 2.5 million pounds of yellowcake per year over a production period of twenty years or longer. When the recovery of uranium from the Gas Hills Project well-fields reaches its economic limit, ISL operations will cease and groundwater restoration in the affected well-fields will begin. In this regard, it is PRI's intent to return the affected groundwater to baseline (pre-mining) conditions or acceptable

water quality based on class of use. When groundwater restoration is complete in all the affected well-fields, all of the surface equipment, buildings, and structures will be decommissioned and all disturbed areas will be reclaimed. PRI's goal in this process will be to return the disturbed areas of the Gas Hills Project to their original or baseline conditions to the extent practical. Radioactive solid wastes and contaminated materials generated during process operations and resulting from decommissioning and reclamation activities will be disposed of at an NRC licensed disposal facility.

II. Opportunity To Provide Comments

The NRC is providing notice to individuals in the vicinity of the facility that the NRC is in receipt of this license amendment request, and will accept comments concerning this action within 30 days of the publication of this notice in the **Federal Register.** The comments may be provided to the Chief, Rules and Directives Branch, Division of Administrative Services, Office of Administration, U.S. Nuclear Regulatory Commission, Washington, DC 20555–0001, and should cite the publication date and page number of this **Federal Register** notice. Written comments may also be delivered to Room T–6 D59, Two White Flint North, 11545 Rockville Pike, Rockville, MD 20852, from 7:30 a.m. until 4:15 p.m. on Federal workdays.

III. Opportunity To Request a Hearing

The NRC hereby provides notice that this is a proceeding on an application for an amendment of a license falling within the scope of Subpart L, ''Informal Hearing Procedures for Adjudications in Materials and Operator Licensing Proceedings' of NRC's rules and practice for domestic licensing proceedings in 10 CFR Part 2. Pursuant to § 2.1205(a), any person whose interest may be affected by this proceeding may file a request for a hearing in accordance with § 2.1205(d). A request for a hearing must be filed within 30 days of the publication of this **Federal Register** notice.

The request for a hearing must be filed with the Office of the Secretary, either:

(1) By delivery to the Rulemaking and Adjudications Staff of the Office of the Secretary of the Commission at One White Flint North, 11555 Rockville Pike, Rockville, MD 20852; or

(2) By mail or telegram addressed to the Secretary, U.S. Nuclear Regulatory Commission, Washington, DC 20555–0001, Attention: Rulemaking and Adjudications Staff. Because of continuing disruptions in the delivery of mail to United States Government offices, it is requested that requests for hearing also be transmitted to the Secretary of the Commission either by means of facsimile transmission to 301–415–1101, or by e-mail to *hearingdocket@nrc.gov.*

In accordance with 10 CFR 2.1205(f), each request for a hearing must also be served, by delivering it personally or by mail, to:

(1) The applicant, Power Resources, Inc., Highland Uranium Project, P.O. Box 1210, Glenrock, Wyoming 82637, Attention: William F. Kearney; and

(2) The NRC staff, by delivery to the General Counsel, One White Flint North, 11555 Rockville Pike, Rockville, MD 20852, or by mail addressed to the Office of the General Counsel, U.S. Nuclear Regulatory Commission, Washington, DC 20555–0001. Because of continuing disruptions in the delivery of mail to United States Government offices, it is requested that requests for hearing be also transmitted to the Office of the General Counsel, either by means of facsimile transmission to 301–415–3725, or by e-mail to *OGCMailCenter@nrc.gov.*

In addition to meeting other applicable requirements of 10 CFR Part 2 of the NRC's regulations, a request for a hearing filed by a person other than an applicant must describe in detail:

(1) The interest of the requestor;

(2) How that interest may be affected by the results of the proceeding, including the reasons why the requestor should be permitted a hearing, with particular reference to the factors set out in § 2.1205(h);

(3) The requestor's areas of concern about the licensing activity that is the subject matter of the proceeding; and

(4) The circumstances establishing that the request for a hearing is timely in accordance with § 2.1205(d).

IV. Further Information

The application for the license amendment, and the supporting supplements and revisions to the application, are available for inspection at NRC's Public Electronic Reading Room at *http://www.nrc.gov/reading-rm/adams.html* [ADAMS Accession Numbers ML030310553, ML023640347, ML993300211, and ML021340187]. Documents may also be examined and/or copied for a fee, at the NRC's Public Document Room, located at One White Flint North, 11555 Rockville Pike, Rockville, MD 20852. Any questions with respect to this action should be referred to Rick Weller, Fuel Cycle Facilities Branch, Division of Fuel Cycle Safety and Safeguards, Office of Nuclear Material Safety and Safeguards, U.S. Nuclear Regulatory Commission, Mail Stop T8–A33, Washington, DC 20555–0001. Telephone: (301) 415–7287; Fax: (301) 415–5390.

Dated at Rockville, Maryland, this 20th day of February, 2003.

For the Nuclear Regulatory Commission.

Daniel M. Gillen,

Chief, Fuel Cycle Facilities Branch, Division of Fuel Cycle Safety and Safeguards, Office of Nuclear Material Safety and Safeguards.

[FR Doc. 03–4538 Filed 2–25–03; 8:45 am]

BILLING CODE 7590–01–P

NUCLEAR REGULATORY COMMISSION

[Docket No. 70–1151; License No. SNM–1107]

Westinghouse Electric Company LLC, Columbia, SC; Order Modifying License (Effective Immediately)

I

Westinghouse Electric Company, L.L.C. (Westinghouse-Columbia) is the holder of Special Nuclear Material License No. SNM–1107 issued by the U.S. Nuclear Regulatory (NRC or Commission) pursuant to 10 CFR Part 70. Westinghouse-Columbia is authorized by their license to receive, possess, and transfer special nuclear material in accordance with the Atomic Energy Act of 1954, as amended, and 10 CFR Part 70. The original license was issued September 3, 1969. The present license was issued in November 1995 and expires in November 2005.

II

On September 11, 2001, terrorists simultaneously attacked targets in New York, NY, and Washington, DC, utilizing large commercial aircraft as weapons. In response to the attacks and intelligence information subsequently obtained, the Commission issued a number of Safeguards and Threat Advisories to its licensees in order to strengthen licensees' capabilities and readiness to respond to a potential attack on a nuclear facility. The Commission has also communicated with other Federal, State and local government agencies and industry representatives to discuss and evaluate the current threat environment in order to assess the adequacy of security measures at licensed facilities. In addition, the Commission has been conducting a comprehensive review of its safeguards and security programs and requirements.

As a result of its consideration of current safeguards and security plan

requirements, as well as a review of information provided by the intelligence community, the Commission has determined that certain compensatory measures are required to be implemented by Westinghouse-Columbia as prudent, interim measures to address the current threat environment. Therefore, the Commission is imposing interim requirements, set forth in Attachment 1[1] of this Order, which supplement existing regulatory requirements, to provide the Commission with reasonable assurance that the public health and safety and common defense and security continue to be adequately protected in the current threat environment. These requirements will remain in effect until the Commission determines otherwise.

The Commission recognizes that some of the requirements set forth in Attachment 1[2] to this Order may already have been initiated by Westinghouse-Columbia in response to previously-issued advisories, or on its own. It is also recognized that some measures may need to be tailored to specifically accommodate the specific circumstances and characteristics existing at Westinghouse-Columbia's facility to achieve the intended objectives and avoid any unforeseen effect on safe operation.

Although Westinghouse-Columbia's response to the Safeguards and Threat Advisories has been adequate to provide reasonable assurance of adequate protection of public health and safety, in light of the current threat environment, the Commission concludes that the security measures must be embodied in an Order, consistent with the established regulatory framework. In order to provide assurance that Westinghouse-Columbia is implementing prudent measures to achieve an adequate level of protection to address the current threat environment, Materials License SNM–1107 shall be modified to include the requirements identified in Attachment 1 to this Order. In addition, pursuant to 10 CFR 2.202 and 70.81, I find that, in the circumstances described above, the public health, safety and interest and the common defense and security require that this Order be immediately effective.

[1] Attachment 1 contains safeguards information and will not be released to the public.

[2] To the extent that specific measures identified in Attachment 1 to this Order require actions pertaining to Westinghouse-Columbia's possession and use of chemicals, such actions are being directed on the basis of the potential impact of such chemicals on radioactive materials and activities subject to NRC regulation.

III

Accordingly, pursuant to Sections 53, 63, 81, 161b, 161i, 161o, 182 and 186 of the Atomic Energy Act of 1954, as amended, and the Commission's regulations in 10 CFR 2.202 and 10 CFR Part 76, *it is hereby ordered, effective immediately, that material license SNM–1107 is modified as follows*:

A. Westinghouse-Columbia shall, notwithstanding the provisions of any Commission regulation to the contrary, comply with the requirements described in Attachment 1 to this Order. Westinghouse-Columbia shall immediately start implementation of the requirements in Attachment 1 to the Order and shall complete implementation, unless otherwise specified in Attachment 1 to this order, no later than August 15, 2003.

B. 1. Westinghouse-Columbia shall, within *twenty (20) days* of the date of this Order, notify the Commission, (1) if it is unable to comply with any of the requirements described in Attachment 1, (2) if compliance with any of the requirements is unnecessary in its specific circumstances, or (3) if implementation of any of the requirements would cause Westinghouse-Columbia to be in violation of the provisions of any Commission regulation or its license. The notification shall provide Westinghouse-Columbia's justification for seeking relief from or variation of any specific requirement.

2. If Westinghouse-Columbia considers that implementation of any of the requirements described in Attachment 1 to this Order would adversely impact safe operation of its facility, Westinghouse-Columbia must notify the Commission, within *twenty (20) days* of this Order, of the adverse safety impact, the basis for its determination that the requirement has an adverse safety impact, and either a proposal for achieving the same objectives specified in the Attachment 1 requirement in question, or a schedule for modifying the facilities to address the adverse safety condition. If neither approach is appropriate, Westinghouse-Columbia must supplement its response to Condition B1 of this Order to identify the condition as a requirement with which it cannot comply, with attendant justifications as required in Condition B1.

C. 1. Westinghouse-Columbia shall, within *twenty (20) days* of the date of this Order, submit to the Commission, a schedule for achieving compliance with each requirement described in Attachment 1.

2. Westinghouse-Columbia shall report to the Commission when it has achieved full compliance with the requirements described in Attachment 1.

D. Notwithstanding any provision of the Commission's regulations to the contrary, all measures implemented or actions taken in response to this Order shall be maintained until the Commission determines otherwise.

Westinghouse-Columbia's responses to Conditions B.1, B.2, C.1, and C.2, above shall be submitted in accordance with 10 CFR 70.5. In addition, Westinghouse-Columbia's submittals that contain safeguards information shall be properly marked and handled in accordance with 10 CFR 73.21.

The Director, Office of Nuclear Material Safety and Safeguards, may, in writing, relax or rescind any of the above conditions upon demonstration by Westinghouse-Columbia of good cause.

IV

In accordance with 10 CFR 2.202, the licensee must, and any other person adversely affected by this Order may, submit an answer to this Order, and may request a hearing on this Order, within twenty (20) days of the date of this Order. Where good cause is shown, consideration will be given to extending the time to request a hearing. A request for extension of time in which to submit an answer or request a hearing must be made in writing to the Director, Office of Nuclear Material Safety and Safeguards, U.S. Nuclear Regulatory Commission, Washington, DC 20555, and include a statement of good cause for the extension. The answer may consent to this Order. Unless the answer consents to this Order, the answer shall, in writing and under oath or affirmation, specifically set forth the matters of fact and law on which the licensee or other person adversely affected relies and the reasons as to why the Order should not have been issued. Any answer or request for a hearing shall be submitted to the Secretary, Office of the Secretary of the Commission, U.S. Nuclear Regulatory Commission, ATTN: Rulemakings and Adjudications Staff, Washington, DC 20555. Copies also shall be sent to the Director, Office of Nuclear Material Safety and Safeguards, U.S. Nuclear Regulatory Commission, Washington, DC 20555, to the Assistant General Counsel for Materials Litigation and Enforcement at the same address, to the Regional Administrator, NRC Region II, Sam Nunn Atlanta Federal Center, Suite 23 T85, 61 Forsyth Street, SW. Atlanta, GA 30303–3415, and to Westinghouse-

Columbia if the answer or hearing request is by a person other than the licensee. Because of possible disruptions in delivery of mail to United States Government offices, it is requested that answers and requests for hearing be transmitted to the Secretary of the Commission either by means of facsimile transmission to 301–415–1101 or by e-mail to *hearingdocket@nrc.gov* and also to the Office of the General Counsel either by means of facsimile transmission to 301–415–3725 or by e-mail to *OGCMailCenter@nrc.gov.* If a person other than the licensee requests a hearing, that person shall set forth with particularity the manner in which his interest is adversely affected by this Order and shall address the criteria set forth in 10 CFR 2.714(d).[3]

If a hearing is requested by the licensee or a person whose interest is adversely affected, the Commission will issue an Order designating the time and place of any hearing. If a hearing is held, the issue to be considered at such hearing shall be whether this Order should be sustained.

Pursuant to 10 CFR 2.202(c)(2)(i), the licensee may, in addition to demanding a hearing, at the time the answer is filed or sooner, move the presiding officer to set aside the immediate effectiveness of the Order on the ground that the Order, including the need for immediate effectiveness, is not based on adequate evidence but on mere suspicion, unfounded allegations, or error.

In the absence of any request for hearing, or written approval of an extension of time in which to request a hearing, the provisions specified in Section III above shall be final twenty (20) days from the date of this Order without further order or proceedings. If an extension of time for requesting a hearing has been approved, the provisions specified in Section III shall be final when the extension expires if a hearing request has not been received. *An answer or a request for hearing shall not stay the immediate effectiveness of this order.*

Dated this 6th day of February 2003.

For the Nuclear Regulatory Commission.

Martin J. Virgilio,

Director, Office of Nuclear Material Safety and Safeguards.

[FR Doc. 03–4537 Filed 2–25–03; 8:45 am]

BILLING CODE 7590–01–P

[3] The most recent version of Title 10 of the Code of Federal Regulations, published January 1, 2002, inadvertently omitted the last sentence of 10 CFR 2.714(d) and subparagraphs (d)(1) and (2), regarding petitions to intervene and contentions. For the complete, corrected text of 10 CFR 2.714(d), please see 67 FR 20884, April 29, 2002.

POSTAL SERVICE BOARD OF GOVERNORS

Sunshine Act Meeting

TIMES AND DATES: 1 p.m., Monday, March 3, 2003; 8:30 a.m., Tuesday, March 4, 2003.

PLACE: Washington, DC, at U.S. Postal Service Headquarters, 475 L'Enfant Plaza, SW., in the Benjamin Franklin Room.

STATUS: March 3—1 p.m. (Closed); March 4—8:30 a.m. (Open).

MATTERS TO BE CONSIDERED:

Monday, March 3—1 p.m. (Closed)

1. Financial Performance.
2. Postal Rate Commission Filing for Customized Marketmail.
3. Rate Case Planning.
4. Strategic Planning.
5. Personnel Matters and Compensation Issues.

Tuesday, March 4—8:30 a.m. (Open)

1. Minutes of the Previous Meeting, February 3–4, 2003.
2. Remarks of the Postmaster General and CEO.
3. Consumer Protection.
4. Update on usps.com Website.
5. Price of Domestic Violence Semipostal Stamp.
6. Overview of 2003 Stamp Program.
7. Tentative Agenda for the March 31–April 1, 2003, meeting in Washington, DC.

FOR FURTHER INFORMATION CONTACT: William T. Johnstone, Secretary of the Board, U.S. Postal Service, 475 L'Enfant Plaza, SW., Washington, DC 20260–1000. Telephone (202) 268–4800.

William T. Johnstone,

Secretary.

[FR Doc. 03–4692 Filed 2–24–03; 3:16 pm]

BILLING CODE 7710–12–M

SECURITIES AND EXCHANGE COMMISSION

[Release No. IC–25940; File No. 812–12844]

Eaton Vance Variable Trust, et al.; Notice of Application

February 20, 2003.

AGENCY: The Securities and Exchange Commission (''SEC'' or ''Commission'').

ACTION: Notice of application for exemption under section 6(c) of the Investment Company Act of 1940, as amended (the ''1940 Act''), for an exemption from the provisions of sections 9(a), 13(a), 15(a) and 15(b) of the 1940 Act, and rules 6e–2(b)(15) and 6e–3(T)(b)(15), thereunder.

APPLICANTS: Eaton Vance Variable Trust (the ''Trust'') and Eaton Vance Management (together with any successor, ''EVM''), OrbiMed Advisors, LLC, and Lloyd George Investment Management (Bermuda) Limited.

SUMMARY: Applicants and certain life insurance companies and their separate accounts that currently invest or may hereafter invest in the Trust (and, to the extent necessary, any investment adviser, principal underwriter and depositor of such an account) seek exemptive relief from the provisions of sections 9(a), 13(a), 15(a) and 15(b) of the 1940 Act, and rules 6e–2(b)(15) and 6e–3(T)(b)(15) thereunder, to the extent necessary to permit shares of the Trust and shares of any other investment company or portfolio that is designed to fund insurance products and for which EVM, OrbiMed, Lloyd George or any of their affiliates may serve in the future as investment adviser, manager, principal underwriter, sponsor, or administrator (''Future Trusts'') (the Trust, together with Future Trusts, are the ''Trusts'') to be sold to and held by: (i) Separate accounts funding variable annuity and variable life insurance contracts (collectively referred to herein as ''Variable Contracts'') issued by both affiliated and unaffiliated life insurance companies; (ii) qualified pension and retirement plans (''Qualified Plans'') outside of the separate account context; (iii) separate accounts that are not registered as investment companies under the 1940 Act pursuant to exemptions from registration under section 3(c) of the 1940 Act; (iv) EVM or certain related corporations (collectively ''EVM''); and (v) any other person permitted to hold shares of the Trusts pursuant to Treasury Regulation 1.817–5 (''General Accounts''), including the general account of any life insurance company whose separate account holds, or will hold, shares of the Trusts or certain related corporations.

FILING DATES: The application was filed on June 28, 2002, and amended and restated on December 18, 2002.

HEARING OR NOTIFICATION OF HEARING: An order granting the application will be issued unless the SEC orders a hearing. Interested persons may request a hearing by writing to the SEC's Secretary and serving applicants with a copy of the request, personally or by mail. Hearing requests should be received by the SEC by 5:30 p.m. on March 17, 2003, and should be accompanied by proof of service on the applicants, in the form of an affidavit or, for lawyers, a certificate of service. Hearing requests should state the nature

of the writer's interest, the reason for the request, and the issues contested. Persons may request notification of a hearing by writing to the Commission's Secretary.

ADDRESSES: Secretary, Securities and Exchange Commission, 450 Fifth Street, NW., Washington, DC 20549–0609. Applicants, c/o Kirkpatrick & Lockhart, LLP, 1800 Massachusetts Ave., NW., Washington, DC, 20036, Attention: Diane E. Ambler, Esq.

FOR FURTHER INFORMATION CONTACT: Curtis A. Young, Senior Counsel, or Lorna J. MacLeod, Branch Chief, Office of Insurance Products, Division of Investment Management, at Tel: (202) 942–0670.

SUPPLEMENTARY INFORMATION: The following is a summary of the application. The complete application may be obtained for a fee from the SEC's Public Reference Branch, 450 Fifth Street, NW., Washington, DC 20549–0102 (telephone (202) 942–8090).

Applicants' Representations

1. The Trust is registered with the Commission as an open-end management investment company and is organized as a Massachusetts Business Trust. EVM, OrbiMed and Lloyd George are registered with the Commission as investment advisers under the Investment Advisers Act of 1940, as amended, and serve as the investment advisers to the Trust. The Trust currently consists of, and offers shares of beneficial interest (''shares'') representing interests in four separate investment portfolios: Eaton Vance VT Floating-Rate Income Fund, Eaton Vance VT Income Fund of Boston, Eaton Vance VT Information Age Fund, and Eaton Vance VT Worldwide Health Sciences Fund (each, a ''Portfolio,'' and collectively, the ''Portfolios''). EVM serves as investment adviser to Eaton Vance VT Floating-Rate Income Fund, Eaton Vance VT Income Fund of Boston, Eaton Vance VT Information Age Fund. OrbiMed serves as investment adviser to Eaton Vance VT Worldwide Health Sciences Fund. Lloyd George serves as co-investment adviser, along with EVM, to Eaton Vance VT Information Age Fund. The Trust or any Future Trusts may offer one or more additional investment portfolios in the future (also referred to as ''Portfolios'').

2. Shares of the Portfolios will be offered to separate accounts of affiliated and unaffiliated insurance companies (each, a ''Participating Insurance Company'') to serve as investment vehicles to fund Variable Contracts (as hereinafter defined). These separate accounts either will be registered as investment companies under the 1940 Act or will be exempt from such registration pursuant to exemptions from registration under section 3(c) of the 1940 Act (individually, a ''Separate Account'' and collectively, the ''Separate Accounts''). Shares of the Portfolios may also be offered to Qualified Plans, EVM or certain related corporations (collectively ''EVM''), and any other person permitted to hold shares of the Trusts pursuant to Treasury Regulation 1.817–5 (''General Accounts''), including the general account of any life insurance company whose separate account holds, or will hold, shares of the Trusts or certain related corporations.

3. The Participating Insurance Companies at the time of their investment in the Trusts either have or will establish their own Separate Accounts and design their own Variable Contracts. Each Participating Insurance Company has or will have the legal obligation of satisfying all applicable requirements under both State and Federal law. Each Participating Insurance Company, on behalf of its Separate Accounts, has or will enter into an agreement with the Trusts concerning such Participating Insurance Company's participation in the Portfolios. The role of the Trusts under this agreement, insofar as the Federal securities laws are applicable, will consist of, among other things, offering shares of the Portfolios to the participating Separate Accounts and complying with any conditions that the Commission may impose upon granting the order requested herein.

Applicants' Legal Analysis

1. Applicants and certain life insurance companies and their Separate Accounts that currently invest or may hereafter invest in the Trust (and, to the extent necessary, any investment adviser, principal underwriter and depositor of such an account) seek exemptive relief from the provisions of sections 9(a), 13(a), 15(a) and 15(b) of the 1940 Act, and rules 6e–2(b)(15) and 6e–3(T)(b)(15) thereunder, to the extent necessary to permit shares of the Portfolios and shares of any Future Trusts to be sold to and held by: (i) Separate accounts funding Variable Contracts issued by both affiliated and unaffiliated life insurance companies; (ii) Qualified Plans outside of the separate account context; (iii) separate accounts that are not registered as investment companies under the 1940 Act pursuant to exemptions from registration under section 3(c) of the 1940 Act; (iv) EVM or certain related corporations (collectively ''EVM''); and (v) any General Accounts, including the general account of any life insurance company whose separate account holds, or will hold, shares of the Trusts or certain related corporations.

2. In connection with the funding of scheduled premium variable life insurance contracts issued through a separate account registered as a unit investment trust (''UIT'') under the 1940 Act, rule 6e–2(b)(15) provides partial exemptions from sections 9(a), 13(a), 15(a) and 15(b) of the 1940 Act. Section 9(a)(2) of the 1940 Act makes it unlawful for any company to serve as an investment adviser or principal underwriter of any UIT, if an affiliated person of that company is subject to a disqualification enumerated in sections 9(a)(1) or (2) of the 1940 Act. Sections 13(a), 15(a) and 15(b) of the 1940 Act have been deemed by the Commission to require ''pass-through'' voting with respect to an underlying investment company's shares. Rule 6e–2(b)(15) provides these exemptions apply only where all of the assets of the UIT are shares of management investment companies ''which offer their shares exclusively to variable life insurance separate accounts of the life insurer or of any affiliated life insurance company.'' Therefore, the relief granted by rule 6e–2(b)(15) is not available with respect to a scheduled premium life insurance separate account that owns shares of an underlying fund that also offers its shares to a variable annuity separate account or flexible premium variable life insurance separate account of the same company or any other affiliated insurance company. The use of a common management investment company as the underlying investment vehicle for both variable annuity and variable life insurance separate accounts of the same life insurance company or of any affiliated life insurance company is referred to herein as ''mixed funding.''

3. The relief granted by rule 6e–2(b)(15) also is not available with respect to a scheduled premium variable life insurance separate account that owns shares of an underlying fund that also offers its shares to separate accounts funding Variable Contracts of one or more unaffiliated life insurance companies. The use of a common management investment company as the underlying investment vehicle for variable annuity and/or variable life insurance separate accounts of unaffiliated life insurance companies is referred to herein as ''shared funding.''

4. The relief under rule 6e–2(b)(15) is available only where shares are offered exclusively to variable life insurance separate accounts of a life insurer or any

affiliated life insurance company, additional exemptive relief is necessary if the shares of the Portfolios are also to be sold to Qualified Plans or other eligible holders of shares, as described above. Applicants note that if shares of the Portfolios are sold only to Qualified Plans, exemptive relief under rule 6e–2 would not be necessary. The relief provided for under this section does not relate to Qualified Plans or to a registered investment company's ability to sell its shares to Qualified Plans. The use of a common management investment company as the underlying investment vehicle for variable annuity and variable life separate accounts of affiliated and unaffiliated insurance companies, and for Qualified Plans, is referred to herein as ''extended mixed and shared funding.''

5. In connection with flexible premium variable life insurance contracts issued through a separate account registered under the 1940 Act as a UIT, rule 6e–3(T)(b)(15) provides partial exemptions from sections 9(a), 13(a), 15(a) and 15(b) of the 1940 Act. The exemptions granted by rule 6e–3(T)(b)(15) are available only where all the assets of the separate account consist of the shares of one or more registered management investment companies that offer to sell their shares ''exclusively to separate accounts of the life insurer, or of any affiliated life insurance companies, offering either scheduled contracts or flexible contracts, or both; or which also offer their shares to variable annuity separate accounts of the life insurer or of an affiliated life insurance company or which offer their shares to any such life insurance company in consideration solely for advances made by the life insurer in connection with the operation of the separate account.'' Therefore, rule 6e–3(T)(b)(15) permits mixed funding but does not permit shared funding.

6. The relief under rule 6e–3(T) is available only where shares are offered exclusively to variable life insurance separate accounts of a life insurer or any affiliated life insurance company, and additional exemptive relief is necessary if the shares of the Portfolios are also to be sold to Qualified Plans or other eligible holders of shares as described above. Applicants note that if shares of the Portfolios were sold only to Qualified Plans, exemptive relief under rule 6e–3(T)(b)(15) would not be necessary. The relief provided for under this section does not relate to Qualified Plans or to a registered investment company's ability to sell its shares to Qualified Plans.

7. Applicants maintain, as discussed below, that there is no policy reason for the sale of the Portfolios' shares to Qualified Plans, to EVM, to OrbiMed, Lloyd George or General Accounts to result in a prohibition against, or otherwise limit, a Participating Insurance Company from relying on the relief provided by rules 6e–2(b)(15) and 6e–3(T)(b)(15). However, because the relief under rules 6e–2(b)(15) and 6e–3(T)(b)(15) is available only when shares are offered exclusively to separate accounts, additional exemptive relief may be necessary if the shares of the Portfolios are also to be sold to Qualified Plans, EVM, OrbiMed, Lloyd George, or General Accounts. Applicants therefore request relief in order to have the Participating Insurance Companies enjoy the benefits of the relief granted in rules 6e–2(b)(15) and 6e–3(T)(b)(15). Applicants note that if the Portfolios' shares were to be sold only to Qualified Plans, EVM, OrbiMed, Lloyd George, or General Accounts and/or separate accounts funding variable annuity contracts, exemptive relief under rule 6e–2 and rule 6e–3(T) would be unnecessary. The relief provided for under rules 6e–2(b)(15) and 6e–3(T)(b)(15) does not relate to Qualified Plans, EVM, OrbiMed, Lloyd George, or General Accounts, or to a registered investment company's ability to sell its shares to such purchasers.

8. Applicants also note that the promulgation of rules 6e–2(b)(15) and 6e–3(T)(b)(15) preceded the issuance of the Regulations that made it possible for shares of an investment company portfolio to be held by the trustee of a Qualified Plan without adversely affecting the ability of shares in the same investment company portfolio also to be held by the separate accounts of insurance companies in connection with their Variable Contracts. Thus, the sale of shares of the same portfolio to both separate accounts and Qualified Plans was not contemplated at the time of the adoption of rules 6e–2(b)(15) and 6e–3(T)(b)(15).

9. Consistent with the Commission's authority under section 6(c) of the 1940 Act to grant exemptive orders to a class or classes of persons and transactions, this application requests relief for the class consisting of insurers and Separate Accounts that will invest in the Portfolios, and to the extent necessary, investment advisers, principal underwriters and depositors of such accounts.

10. Section 9(a)(3) of the 1940 Act provides that it is unlawful for any company to serve as investment adviser or principal underwriter of any registered open-end investment company if an affiliated person of that company is subject to a disqualification enumerated in sections 9(a)(1) or (2). Rules 6e–2(b)(15)(i) and (ii) and rules 6e–3(T)(b)(15)(i) and (ii) under the 1940 Act provide exemptions from section 9(a) under certain circumstances, subject to the limitations discussed above on mixed and shared funding. These exemptions limit the application of the eligibility restrictions to affiliated individuals or companies that directly participate in management of the underlying management company.

11. The partial relief granted in rules 6e–2(b)(15) and 6e–3(T)(b)(15) under the 1940 Act from the requirements of section 9 of the 1940 Act, in effect, limits the amount of monitoring necessary to ensure compliance with section 9 to that which is appropriate in light of the policy and purposes of section 9. Those 1940 Act rules recognize that it is not necessary for the protection of investors or the purposes fairly intended by the policy and provisions of the 1940 Act to apply the provisions of section 9(a) to individuals in a large insurance company complex, most of whom will have no involvement in matters pertaining to investment companies in that organization. The Participating Insurance Companies and Qualified Plans are not expected to play any role in the management of the Trusts. Those individuals who participate in the management of the Trusts will remain the same regardless of which Separate Accounts or Qualified Plans invests in the Trusts. Applying the monitoring requirements of section 9(a) of the 1940 Act because of investment by separate accounts of other insurers or Qualified Plans would be unjustified and would not serve any regulatory purpose. Furthermore, the increased monitoring costs could reduce the net rates of return realized by contract owners.

12. Moreover, since the Qualified Plans, EVM, OrbiMed, Lloyd George and General Accounts are not themselves investment companies, and therefore are not subject to section 9 of the 1940 Act and will not be deemed affiliates solely by virtue of their shareholdings, no additional relief is necessary.

13. Rules 6e–2(b)(15)(iii) and 6e–3(T)(b)(15)(iii) under the 1940 Act provide exemptions from the pass-through voting requirement with respect to several significant matters, assuming the limitations on mixed and shared funding are observed. Rules 6e–2(b)(15)(iii)(A) and 6e–3(T)(b)(15)(iii)(A) provide that the insurance company may disregard the voting instructions of its contract owners with respect to the investments of an underlying fund, or any contract between such a fund and its investment adviser, when required to

do so by an insurance regulatory authority (subject to the provisions of paragraphs (b)(5)(i) and (b)(7)(ii)(A) of rules 6e–2 and 6e–3(T), respectively, under the 1940 Act). Rules 6e–2(b)(15)(iii)(B) and 6e–3 (T)(b)(15)(iii)(A)(2) provide that the insurance company may disregard the voting instructions of its contract owners if the contract owners initiate any change in an underlying fund's investment policies, principal underwriter, or any investment adviser (provided that disregarding such voting instructions is reasonable and subject to the other provisions of paragraphs (b)(5)(ii), (b)(7)(ii)(B), and (b)(7)(ii)(C), respectively, of rules 6e–2 and 6e–3(T) under the 1940 Act).

14. Rule 6e–2 under the 1940 Act recognizes that a variable life insurance contract, as an insurance contract, has important elements unique to insurance contracts and is subject to extensive state regulation of insurance. In adopting rule 6e–2(b)(15)(iii), the Commission expressly recognized that state insurance regulators have authority, pursuant to state insurance laws or regulations, to disapprove or require changes in investment policies, investment advisers, or principal underwriters. The Commission also expressly recognized that state insurance regulators have authority to require an insurer to draw from its general account to cover costs imposed upon the insurer by a change approved by contract owners over the insurer's objection. The Commission, therefore, deemed such exemptions necessary to assure the solvency of the life insurer and performance of its contractual obligations by enabling an insurance regulatory authority or the life insurer to act when certain proposals reasonably could be expected to increase the risks undertaken by the life insurer. In this respect, flexible premium variable life insurance contracts are identical to scheduled premium variable life insurance contracts. Therefore, the corresponding provisions of rule 6e–3(T) under the 1940 Act undoubtedly were adopted in recognition of the same factors.

15. The sale of Portfolio shares to Qualified Plans, EVM, OrbiMed, Lloyd George and General Accounts will not have any impact on the relief requested herein. With respect to the Qualified Plans, which are not registered as investment companies under the 1940 Act, there is no requirement to pass through voting rights to Qualified Plan participants. Indeed, to the contrary, applicable law expressly reserves voting rights associated with Qualified Plan assets to certain specified persons. Under section 403(a) of ERISA, shares of a portfolio of a fund sold to a Qualified Plan must be held by the trustees of the Qualified Plan. Section 403(a) also provides that the trustee(s) must have exclusive authority and discretion to manage and control the Qualified Plan with two exceptions: (i) when the Qualified Plan expressly provides that the trustee(s) are subject to the direction of a named fiduciary who is not a trustee, in which case the trustees are subject to proper directions made in accordance with the terms of the Qualified Plan and not contrary to ERISA, and (ii) when the authority to manage, acquire, or dispose of assets of the Qualified Plan is delegated to one or more investment managers pursuant to section 402(c)(3) of ERISA. Unless one of the above two exceptions stated in section 403(a) applies, Qualified Plan trustees have the exclusive authority and responsibility for voting proxies.

16. Where a named fiduciary to a Qualified Plan appoints an investment manager, the investment manager has the responsibility to vote the shares held unless the right to vote such shares is reserved to the trustees or the named fiduciary. The Qualified Plans may have their trustee(s) or other fiduciaries exercise voting rights attributable to investment securities held by the Qualified Plans in their discretion. Some of the Qualified Plans, however, may provide for the trustee(s), an investment adviser (or advisers), or another named fiduciary to exercise voting rights in accordance with instructions from participants. Similarly, EVM, OrbiMed, Lloyd George and General Accounts are not subject to any pass-through voting requirements. Accordingly, unlike the case with insurance company separate accounts, the issue of resolution of material irreconcilable conflicts with respect to voting is not present with Qualified Plans, EVM, OrbiMed, Lloyd George or General Accounts.

17. Where a Qualified Plan does not provide participants with the right to give voting instructions, the trustee or named fiduciary has responsibility to vote the shares held by the Qualified Plan. In this circumstance, the trustee has a fiduciary duty to vote the shares in the best interest of the Qualified Plan participants. Accordingly, even if EVM, OrbiMed, Lloyd George or an affiliate of EVM, OrbiMed or Lloyd George were to serve in the capacity of trustee or named fiduciary with voting responsibilities, EVM, OrbiMed, Lloyd George or their affiliates would have a fiduciary duty to vote those shares in the best interest of the Qualified Plan participants.

18. In addition, even if a Qualified Plan were to hold a controlling interest in a Portfolio, Applicants do not believe that such control would disadvantage other investors in such Portfolio to any greater extent than is the case when any institutional shareholder holds a majority of the voting securities of any open-end management investment company. In this regard, Applicants submit that investment in a Portfolio by a Qualified Plan will not create any of the voting complications occasioned by mixed funding or shared funding. Unlike mixed funding or shared funding, Qualified Plan investor voting rights cannot be frustrated by veto rights of insurers or state regulators.

19. Where a Qualified Plan provides participants with the right to give voting instructions, Applicants see no reason to believe that participants in Qualified Plans generally or those in a particular Qualified Plan, either as a single group or in combination with participants in other Qualified Plans, would vote in a manner that would disadvantage Variable Contract holders. The purchase of shares of Portfolios by Qualified Plans that provide voting rights does not present any complications not otherwise occasioned by mixed or shared funding.

20. The prohibitions on mixed and shared funding might reflect concern regarding possible different investment motivations among investors. When rule 6e–2 under the 1940 Act was adopted, variable annuity separate accounts could invest in mutual funds whose shares also were offered to the general public. Therefore, the Commission staff contemplated underlying funds with public shareholders, as well as with variable life insurance separate account shareholders. The Commission staff may have been concerned with the potentially different investment motivations of public shareholders and variable life insurance contract owners. There also may have been some concern with respect to the problems of permitting a state insurance regulatory authority to affect the operations of a publicly available mutual fund and to affect the investment decisions of public shareholders.

21. For reasons unrelated to the 1940 Act, however, Internal Revenue Service Revenue Ruling 81–225 (Sept. 25, 1981) effectively deprived variable annuities funded by publicly available mutual funds of their tax-benefited status. The Tax Reform Act of 1984 codified the prohibition against the use of publicly available mutual funds as an investment vehicle for Variable Contracts (including variable life contracts). Section 817(h) of the Code in effect requires that the investments made by variable annuity

and variable life insurance separate accounts be ''adequately diversified.'' If a separate account is organized as a UIT that invests in a single fund or series, the diversification test will be applied at the underlying fund level, rather than at the separate account level, but only if ''all of the beneficial interests'' in the underlying fund ''are held by one or more insurance companies (or affiliated companies) in their general account or in segregated asset accounts. * * *'' Accordingly, a UIT separate account that invests solely in a publicly available mutual fund will not be adequately diversified. In addition, any underlying mutual fund, including any Portfolio, that sells shares to separate accounts, in effect, would be precluded from also selling its shares to the public. Consequently, there will be no public shareholders of any Portfolio.

22. Shared funding by unaffiliated insurance companies does not present any issues that do not already exist where a single insurance company is licensed to do business in several or all states. A particular state insurance regulatory body could require action that is inconsistent with the requirements of other states in which the insurance company offers its policies. The fact that different insurers may be domiciled in different states does not create a significantly different or enlarged problem.

23. Shared funding by unaffiliated insurers, in this respect, is no different than the use of the same investment company as the funding vehicle for affiliated insurers, which rules 6e–2(b)(15) and 6e–3(T)(b)(15) under the 1940 Act permit. Affiliated insurers may be domiciled in different states and be subject to differing state law requirements. Affiliation does not reduce the potential, if any exists, for differences in state regulatory requirements. In any event, the conditions set forth below are designed to safeguard against, and provide procedures for resolving, any adverse effects that differences among state regulatory requirements may produce. If a particular state insurance regulator's decision conflicts with the majority of other state regulators, then the affected insurer will be required to withdraw its Separate Account's investment in the affected Trust. This requirement will be provided for in agreements that will be entered into by Participating Insurance Companies with respect to their participation in the relevant Portfolio.

24. Rules 6e–2(b)(15) and 6e–3(T)(b)(15) under the 1940 Act give the insurance company the right to disregard the voting instructions of the contract owners. This right does not raise any issues different from those raised by the authority of state insurance administrators over separate accounts. Under rules 6e–2(b)(15) and 6e–3(T)(b)(15), an insurer can disregard contract owner voting instructions only with respect to certain specified items. Affiliation does not eliminate the potential, if any exists, for divergent judgments as to the advisability or legality of a change in investment policies, principal underwriter, or investment adviser initiated by contract owners. The potential for disagreement is limited by the requirements in rules 6e–2 and 6e–3(T) under the 1940 Act that the insurance company's disregard of voting instructions be reasonable and based on specific good-faith determinations.

25. A particular insurer's disregard of voting instructions, nevertheless, could conflict with the majority of contract owners' voting instructions. The insurer's action possibly could be different than the determination of all or some of the other insurers (including affiliated insurers) that the voting instructions of contract owners should prevail, and either could preclude a majority vote approving the change or could represent a minority view. If the insurer's judgment represents a minority position or would preclude a majority vote, then the insurer may be required, at the affected Trust's election, to withdraw its Separate Account's investment in such Portfolio. No charge or penalty will be imposed as a result of such withdrawal. This requirement will be provided for in the agreements entered into with respect to participation by the Participating Insurance Companies in each Portfolio.

26. Each Portfolio will be managed to attempt to achieve the investment objective or objectives of such Portfolio, and not to favor or disfavor any particular Participating Insurance Company or type of insurance product. There is no reason to believe that different features of various types of contracts, including the ''minimum death benefit'' guarantee under certain variable life insurance contracts, will lead to different investment policies for different types of Variable Contracts. To the extent that the degree of risk may differ as between variable annuity contracts and variable life insurance policies, the different insurance charges imposed, in effect, adjust any such differences and equalize the insurers' exposure in either case.

27. Applicants do not believe that the sale of the shares of the Portfolios to Qualified Plans will increase the potential for material irreconcilable conflicts of interest between or among different types of investors. In particular, Applicants see very little potential for such conflicts beyond those which would otherwise exist between variable annuity and variable life insurance contract owners. Moreover, in considering the appropriateness of the requested relief, Applicants have analyzed the following issues to assure themselves that there were either no conflicts of interest or that there existed the ability by the affected parties to resolve the issues without harm to the contract owners in the Separate Accounts or to the participants under the Qualified Plans.

28. Applicants considered whether there are any issues raised under the Code, Regulations, or Revenue Rulings thereunder, if Qualified Plans, variable annuity separate accounts, and variable life insurance separate accounts all invest in the same underlying fund. As noted above, section 817(h) of the Code imposes certain diversification standards on the underlying assets of Variable Contracts held in an underlying mutual fund. The Code provides that a Variable Contract shall not be treated as an annuity contract or life insurance, as applicable, for any period (and any subsequent period) for which the investments are not, in accordance with regulations prescribed by the Treasury Department, adequately diversified.

29. Regulations issued under section 817(h) provide that, in order to meet the statutory diversification requirements, all of the beneficial interests in the investment company must be held by the segregated asset accounts of one or more insurance companies. However, the Regulations contain certain exceptions to this requirement, one of which allows shares in an underlying mutual fund to be held by the trustees of a qualified pension or retirement plan without adversely affecting the ability of such shares also to be held by separate accounts of insurance companies in connection with their Variable Contracts. (Treas. Reg. 1.817–5(f)(3)(iii)) Thus, the Regulations specifically permit ''qualified pension or retirement plans'' and separate accounts to invest in the same underlying fund. For this reason, Applicants have concluded that neither the Code, nor Regulations, nor Revenue Rulings thereunder, present any inherent conflicts of interest if the Qualified Plans and Separate Accounts all invest in the same Portfolio.

30. Applicants note that while there are differences in the manner in which distributions from Variable Contracts and Qualified Plans are taxed, these differences will have no impact on the Trusts. When distributions are to be

made, and a Separate Account or Qualified Plan is unable to net purchase payments to make the distributions, the Separate Account and Qualified Plan will redeem shares of the relevant Portfolio at their respective net asset value in conformity with rule 22c–1 under the 1940 Act (without the imposition of any sales charge) to provide proceeds to meet distribution needs. A Participating Insurance Company then will make distributions in accordance with the terms of its Variable Contract, and a Qualified Plan then will make distributions in accordance with the terms of the Qualified Plan.

31. In connection with any meeting of shareholders, the soliciting Trust will inform each shareholder, including each Separate Account, Qualified Plan, EVM, OrbiMed, Lloyd George and General Account, of information necessary for the meeting, including their respective share of ownership in the relevant Portfolio. Each Participating Insurance Company then will solicit voting instructions in accordance with rules 6e–2 and 6e–3(T), as applicable, and its agreement with the Trusts concerning participation in the relevant Portfolio. Shares of a Portfolio that are held by EVM, OrbiMed, Lloyd George and any General Account will be voted in the same proportion as all variable contract owners having voting rights with respect to that Portfolio. However, EVM, OrbiMed, Lloyd George and any General Account will vote their shares in such other manner as the Commission may require. Shares held by Qualified Plans will be voted in accordance with applicable law. The voting rights provided to Qualified Plans with respect to shares of a Portfolio would be no different from the voting rights that are provided to Qualified Plans with respect to shares of funds sold to the general public. Furthermore, if a material irreconcilable conflict arises because of a Qualified Plan's decision to disregard Qualified Plan participant voting instructions, if applicable, and that decision represents a minority position or would preclude a majority vote, the Qualified Plan may be required, at the election of the affected Trust, to withdraw its investment in such Portfolio, and no charge or penalty will be imposed as a result of such withdrawal.

32. Applicants reviewed whether a ''senior security,'' as such term is defined under section 18(g) of the 1940 Act, is created with respect to any Variable Contract owner as opposed to a participant under a Qualified Plan, EVM, OrbiMed, Lloyd George or a General Account. Applicants concluded that the ability of the Trusts to sell shares of their Portfolios directly to Qualified Plans, EVM, OrbiMed, Lloyd George or a General Account does not create a senior security. ''Senior security'' is defined under section 18(g) of the 1940 Act to include ''any stock of a class having priority over any other class as to distribution of assets or payment of dividends.'' As noted above, regardless of the rights and benefits of participants under Qualified Plans, or contract owners under Variable Contracts, the Qualified Plans, EVM, OrbiMed, Lloyd George, General Accounts and the Separate Accounts only have rights with respect to their respective shares of the Portfolio. They only can redeem such shares at net asset value. No shareholder of a Portfolio has any preference over any other shareholder with respect to distribution of assets or payment of dividends.

Applicants' Conditions

Applicants agree that the order granting the requested relief shall be subject to the following conditions which shall apply to the Trust as well as any Future Trust that relies on the order:

1. A majority of the Board of Trustees (the ''Board'') of the Trust will consist of persons who are not ''interested persons'' of the Trust, as defined by section 2(a)(l 9) of the 1940 Act, and the rules thereunder, and as modified by any applicable orders of the Commission, except that if this condition is not met by reason of the death, disqualification, or *bona-fide* resignation of any trustee or trustees, then the operation of this condition will be suspended: (i) For a period of 90 days if the vacancy or vacancies may be filled by the Board; (ii) for a period of 150 days if a vote of shareholders is required to fill the vacancy or vacancies; or (iii) for such longer period as the Commission may prescribe by order upon application.

2. The Board will monitor the Trust for the existence of any material irreconcilable conflict between the interests of the contract owners of all Separate Accounts and participants of all Qualified Plans investing in such Trust, and determine what action, if any should be taken in response to such conflicts. A material irreconcilable conflict may arise for a variety of reasons, including: (i) An action by any state insurance regulatory authority; (ii) a change in applicable federal or state insurance tax, or securities laws or regulations, or a public ruling, private letter ruling, no-action or interpretative letter, or any similar action by insurance, tax, or securities regulatory authorities; (iii) an administrative or judicial decision in any relevant proceeding; (iv) the manner in which the investments of such Trust are being managed; (v) a difference in voting instructions given by variable annuity contract owners, variable life insurance contract owners, and trustees of the Qualified Plans; (vi) a decision by a Participating Insurance Company to disregard the voting instructions of contract owners; or (vii) if applicable, a decision by a Qualified Plan to disregard the voting instructions of Qualified Plan participants.

3. Participating Insurance Companies (on their own behalf, as well as by virtue of any investment of general account assets in a Portfolio), EVM, OrbiMed, and any Qualified Plan that executes a participation agreement upon becoming an owner of 10 percent or more of the assets of any Portfolio (collectively, ''Participants'') will report any potential or existing conflicts to the Board. Participants will be responsible for assisting the Board in carrying out the Board's responsibilities under these conditions by providing the Board with all information reasonably necessary for the Board to consider any issues raised. This responsibility includes, but is not limited to, an obligation by each Participating Insurance Company to inform the Board whenever contract owner voting instructions are disregarded, and, if pass-through voting is applicable, an obligation by each Qualified Plan to inform the Board whenever it has determined to disregard Qualified Plan participant voting instructions. The responsibility to report such information and conflicts, and to assist the Board, will be a contractual obligation of all Participating Insurance Companies under their participation agreements with the Trust, and these responsibilities will be carried out with a view only to the interests of the contract owners. The responsibility to report such information and conflicts, and to assist the Board, also will be contractual obligations of all Qualified Plans with participation agreements, and such agreements will provide that these responsibilities will be carried out with a view only to the interests of Qualified Plan participants.

4. If it is determined by a majority of the Board, or a majority of the disinterested trustees of the Board, that a material irreconcilable conflict exists, then the relevant Participant will, at its expense and to the extent reasonably practicable (as determined by a majority of the disinterested trustees), take whatever steps are necessary to remedy or eliminate the material irreconcilable conflict, up to and including: (i)

Withdrawing the assets allocable to some or all of the Separate Accounts from the relevant Portfolio and reinvesting such assets in a different investment vehicle including another Portfolio, or in the case of Participating Insurance Company Participants submitting the question as to whether such segregation should be implemented to a vote of all affected contract owners and, as appropriate, segregating the assets of any appropriate group (*i.e.*, annuity contract owners or life insurance contract owners of one or more Participating Insurance Companies) that votes in favor of such segregation, or offering to the affected contract owners the option of making such a change; and (ii) establishing a new registered management investment company or managed separate account. If a material irreconcilable conflict arises because of a decision by a Participating Insurance Company to disregard contract owner voting instructions, and that decision represents a minority position or would preclude a majority vote, then the insurer may be required, at the election of the Trust, to withdraw such insurer's Separate Account's investment in the Trust, and no charge or penalty will be imposed as a result of such withdrawal. If a material irreconcilable conflict arises because of a Qualified Plan's decision to disregard Qualified Plan participant voting instructions, if applicable, and that decision represents a minority position or would preclude a majority vote, the Qualified Plan may be required, at the election of the Trust, to withdraw its investment in the Trust, and no charge or penalty will be imposed as a result of such withdrawal. The responsibility to take remedial action in the event of a Board determination of a material irreconcilable conflict and to bear the cost of such remedial action will be a contractual obligation of all Participants under their agreements governing participation in the Trust, and these responsibilities will be carried out with a view only to the interests of contract owners and Qualified Plan participants.

For purposes of this Condition 4, a majority of the disinterested members of the Board will determine whether or not any proposed action adequately remedies any material irreconcilable conflict, but, in no event will the Trust, EVM, OrbiMed or Lloyd George or an affiliate of EVM, OrbiMed or Lloyd George, as relevant, be required to establish a new funding vehicle for any Variable Contract. No Participating Insurance Company will be required by this Condition 4 to establish a new funding vehicle for any Variable Contract if any offer to do so has been declined by vote of a majority of the contract owners materially and adversely affected by the material irreconcilable conflict. Further, no Qualified Plan will be required by this Condition 4 to establish a new funding vehicle for the Qualified Plan if: (i) a majority of the Qualified Plan participants materially and adversely affected by the irreconcilable material conflict vote to decline such offer, or (ii) pursuant to documents governing the Qualified Plan, the Qualified Plan makes such decision without a Qualified Plan participant vote.

5. The Board's determination of the existence of a material irreconcilable conflict and its implications will be made known in writing promptly to all Participants.

6. As to Variable Contracts issued by Separate Accounts registered under the 1940 Act, Participating Insurance Companies will provide pass-through voting privileges to all Variable Contract owners as required by the 1940 Act as interpreted by the Commission. However, as to Variable Contracts issued by unregistered Separate Accounts, pass-through voting privileges will be extended to contract owners to the extent granted by the issuing insurance company. Accordingly, such Participants, where applicable, will vote shares of the applicable Portfolio held in their, Separate Accounts in a manner consistent with voting instructions timely received from Variable Contract owners. Participating Insurance Companies will be responsible for assuring that each Separate Account investing in a Portfolio calculates voting privileges in a manner consistent with other Participants.

The obligation to calculate voting privileges as provided in this Application will be a contractual obligation of all Participating Insurance Companies under their agreement with the Trusts governing participation in a Portfolio. Each Participating Insurance Company will vote shares for which it has not received timely voting instructions, as well as shares it owns through its Separate Accounts, in the same proportion as it votes those shares for which it has received voting instructions. Each Qualified Plan will vote as required by applicable law and governing Qualified Plan documents.

7. As long as the 1940 Act requires pass-through voting privileges to be provided to variable contract owners, EVM, OrbiMed, Lloyd George or any of their affiliates, and any General Account will vote its shares of any Portfolio in the same proportion of all variable contract owners having voting rights with respect to that Portfolio; provided, however, that EVM, OrbiMed, Lloyd George or any of their affiliates or any insurance company General Account shall vote its shares in such other manner as may be required by the Commission or its staff.

8. The Trust will comply with all provisions of the 1940 Act requiring voting by shareholders, which for these purposes, shall be the persons having a voting interest in the shares of the respective Portfolio, and, in particular, the Trust will either provide for annual meetings (except to the extent that the Commission may interpret section 16 of the 1940 Act not to require such meetings) or comply with section 16(c) of the 1940 Act (although the Trust is not one of the funds of the type described in the section 16(c) of the 1940 Act), as well as with section 16(a) of the 1940 Act and, if and when applicable, section 16(b) of the 1940 Act. Further, the Trust will act in accordance with the Commission's interpretation of the requirements of section 16(a) with respect to periodic elections of trustees and with whatever rules the Commission may promulgate with respect thereto.

9. The Trust will notify all Participants that Separate Account prospectus disclosure or Qualified Plan prospectuses or other Qualified Plan disclosure documents regarding potential risks of mixed and shared funding may be appropriate. The Trust will disclose in its prospectus that (i) shares of the Trust may be offered to Separate Accounts of both variable annuity and variable life insurance contracts and, if applicable, to Qualified Plans; (ii) due to differences in tax treatment and other considerations, the interests of various contract owners participating in the Trust and the interests of Qualified Plans investing in the Trust, if applicable, may conflict; and (iii) the Trust's Board will monitor events in order to identify the existence of any material irreconcilable conflicts and to determine what action, if any, should be taken in response to any such conflict.

10. If and to the extent that rule 6e–2 and rule 6e–3(T) under the 1940 Act are amended, or proposed rule 6e–3 under the 1940 Act is adopted, to provide exemptive relief from any provision of the 1940 Act, or the rules promulgated thereunder, with respect to mixed or shared funding, on terms and conditions materially different from any exemptions granted in the order requested in this Application, then the Trust and/or Participating Insurance

Companies, as appropriate, shall take such steps as may be necessary to comply with rules 6e–2 and 6e–3(T), or rule 6e–3, as such rules are applicable.

11. The Participants, at least annually, will submit to the Board such reports, materials, or data as a Board reasonably may request so that the trustees of the Board may fully carry out the obligations imposed upon the Board by the conditions contained in this application. Such reports, materials, and data will be submitted more frequently if deemed appropriate by the Board. The obligations of the Participants to provide these reports, materials, and data to the Board, when it so reasonably requests, will be a contractual obligation of all Participants under their agreements governing participation in the Portfolios.

12. All reports of potential or existing conflicts received by the Board, and all Board action with regard to determining the existence of a conflict, notifying Participants of a conflict, and determining whether any proposed action adequately remedies a conflict, will be properly recorded in the minutes of the Board or other appropriate records, and such minutes or other records shall be made available to the Commission upon request.

13. The Trust will not accept a purchase order from a Qualified Plan if such purchase would make the Qualified Plan shareholder an owner of 10 percent or more of the assets of such Portfolio unless such Qualified Plan executes an agreement with the Trust governing participation in such Portfolio that includes the conditions set forth herein to the extent applicable. A Qualified Plan or Qualified Plan participant will execute an application containing an acknowledgment of this condition at the time of its initial purchase of shares of any Portfolio.

Conclusion

Applicants submit, based on the grounds summarized above, that the exemptions requested are necessary or appropriate in the public interest and consistent with the protection of investors and the purposes fairly intended by the policy and provisions of the 1940 Act.

For the Commission, by the Division of Investment Management, pursuant to delegated authority.

Margaret H. McFarland,

Deputy Secretary.

[FR Doc. 03–4503 Filed 2–25–03; 8:45 am]

BILLING CODE 8010–01–P

SECURITIES AND EXCHANGE COMMISSION

[Release No. IC–25939; File No. 812–12370]

The Lincoln National Life Insurance Company, *et al.*; Notice of Application

February 20, 2003.

AGENCY: Securities and Exchange Commission (the ''Commission'').

ACTION: Notice of Application for an order pursuant to Section 11(a) of the Investment Company Act of 1940 (the ''Act'') approving the terms of an offering of an enhancement offer.

Applicants: The Lincoln National Life Insurance Company (''Lincoln Life''), Lincoln National Variable Annuity Account E (''Account E''), Lincoln National Variable Annuity Account H (''Account H'') (Account E and Account H collectively, ''Annuity Accounts'') and American Funds Distributors, Inc. (''AFD'').

Summary of Application. Applicants seek an order approving the terms of a proposed offering of an enhancement offer for certain contracts issued and outstanding whereby an enhancement benefit would be added to the contracts.

Filing Date. The application was filed on December 19, 2000 and amended and restated on December 31, 2001 and on February 10, 2003.

Hearing or Notification of Hearing. An order granting the application will be issued unless the Commission orders a hearing. Interested persons may request a hearing by writing to the Secretary of the Commission and serving Applicants with a copy of the request, personally or by mail. Hearing requests must be received by the Commission by 5:30 p.m. on March 17, 2003, and should be accompanied by proof of service on Applicants in the form of an affidavit or, for lawyers, a certificate of service. Hearing requests should state the nature of the requester's interest, the reason for the request, and the issues contested. Persons who wish to be notified of a hearing may request notification by writing to the Secretary of the Commission.

ADDRESSES: Secretary, Securities and Exchange Commission, 450 Fifth Street, NW, Washington, DC 20549–0609. Applicants, Mary Jo Ardington, Esq., The Lincoln National Life Insurance Company, 1300 S. Clinton Street, PO Box 1110, Fort Wayne, IN 46801–1110.

FOR FURTHER INFORMATION CONTACT: Lorna MacLeod, Branch Chief, or Rebecca Marquigny, Senior Attorney, Office of Insurance Products, Division of Investment Management, at (202) 942–0670.

SUPPLEMENTARY INFORMATION: The following is a summary of the application. The complete application is available for a fee from the Public Reference Branch of the Commission, 450 Fifth Street, NW, Washington, DC 20549–0102, (202) 942–8090.

Applicants' Representations

1. Lincoln Life was founded in 1905 under Indiana Law, and is a wholly-owned subsidiary of Lincoln National Corp., which is organized under Indiana law. Lincoln National Corp.'s primary businesses are insurance and financial services. Lincoln Life is the Annuity Accounts' depositor within the meaning of the Act.

2. Account E was established on September 26, 1986 and Account H was established on February 7, 1989 as insurance company separate accounts under Indiana law. They are registered with the Commission as unit investment trusts under the provisions of the Act. The Annuity Accounts are segregated investment accounts and as such their assets may not be charged with liabilities resulting from any other business that Lincoln Life may conduct. Income, gains and losses, whether realized or not, from assets allocated to the Annuity Accounts are, in accordance with the applicable annuity contracts, credited to or charged against the Annuity Accounts, and without regard to any other income, gains or losses of Lincoln Life. The Annuity Accounts satisfy the definition of a separate account under the federal securities law. The Annuity Accounts are registered on Form N–4 under the Act as unit investment trusts.

3. The Annuity Accounts fund the American Legacy Series of Variable Annuity Contracts (''Legacy Contracts'') that Lincoln Life and AFD have offered and sold for a number of years including the American Legacy Contract (''Legacy I'') and the American Legacy II Contract (''Legacy II''). The contracts are flexible premium deferred variable and fixed annuity contracts under which contract owners may pay one or more purchase payments over a period of time.

4. The subaccounts are invested in funds of the American Funds Insurance Series. To the extent that an owner selects one or more subaccounts, his or her investment in the contract will vary with the investment performance of the selected subaccount. To the extent that an owner selects the general account, Lincoln Life guarantees that the amount allocated to the general account will be credited with a minimum interest rate and Lincoln Life may credit additional interest which it may declare from time to time.

5. AFD is the distributor and primary underwriter of the contracts issued by Lincoln Life through the Annuity Accounts. AFD is registered as a broker-dealer under the Securities Exchange Act of 1934 and is a member of the National Association of Securities Dealers.

6. The Application relates to two Legacy Contracts. The Legacy I contracts issued through Account E have been registered under the Securities Act of 1933 pursuant to a registration statement on Form N–4. The Legacy II contracts issued through Account H have been registered under the Securities Act of 1933 pursuant to a registration statement on Form N–4.

7. During the accumulation period under the Legacy Contracts, based upon the contract owner's instructions, purchase payments are allocated to the selected subaccounts of the Annuity Accounts and/or Lincoln Life's general account. To the extent that an owner selects one or more subaccounts, his or her investment in the contract will vary with the investment performance of the selected subaccount(s).

8. A contract owner can elect to receive annuity payments under his or her contract. Under a contract, annuity payments are based upon the life of an annuitant and in some cases the lives of two (or joint) annuitants. Annuity options are available on a variable basis (*i.e.*, funded by the Annuity Accounts) and/or on a fixed basis (*i.e.*, funded through Lincoln Life's general account).

9. The Legacy I contract has been offered and sold for a number of years. The minimum purchase payment for Legacy I is $1500 for nonqualified contracts and $300 for qualified contracts. Legacy I contracts impose a surrender charge of up to 6% of any amount by which purchase payments withdrawn in any year exceed 10% of purchase payments (however, this 10% withdrawal exception does not apply to a surrender of a contract). The surrender charge associated with each purchase payment after year 2 declines 1% each year until it is 0% at the end of the seventh year after the payment was made.

10. The Legacy I contracts also impose the following charges: (a) a daily mortality and expense risk charge at an annual rate of 1.25% of the daily net asset value of Account E; (b) for contracts that include the Enhanced Guaranteed Minimum Death Benefit (''EGMDB''), an additional daily charge at an annual rate of 0.15% of the net asset value of Account E; (c) an annual contract maintenance charge of $35; and (d) a charge corresponding to any applicable state premium tax or other tax levied by any governmental entity.

11. The Legacy II contracts impose a minimum purchase payment of $1500 for nonqualified contracts and $300 for qualified contracts. The Legacy II contracts also impose a surrender charge of up to 6% of any amount by which purchase payments withdrawn in any year exceed 10% of purchase payments (however, this 10% withdrawal exception does not apply to a surrender of a contract). The surrender charge associated with each purchase payment after year 2 declines 1% each year until it is 0% at the end of the seventh year after the payment was made.

12. The Legacy II contracts also impose the following charges: (a) a daily mortality and expense risk charge at an annual rate of 1.25% of the daily net asset value of Account H; (b) a daily administrative charge at an annual rate of 0.10% of the daily net asset value of Account H; (c) for those contracts that include the EGMDB, a daily charge at an annual rate of 0.15% of the net asset value of Account H; (d) an annual contract maintenance charge of $35; and (e) a charge corresponding to any applicable state premium tax or other tax levied by any governmental entity.

13. Under both the Legacy I and Legacy II contracts, the death benefit equals the greater of: (a) the Guaranteed Minimum Death Benefit (''GMDB''), or if elected, the EGMDB, or (b) the current value of the contract as of the day Lincoln Life approves the claim for payment. For these contracts, the GMDB is equal to

a. The sum of all purchase payments, plus

b. any gain attributable to those purchase payments as of the seventh anniversary date of each payment, minus

c. any withdrawals.

The attributable gain consists of the earnings on each contract years' net purchase payments (purchase payments minus any withdrawals) as of the valuation date just before the seventh anniversary of the purchase payment (*i.e.* once the surrender charge period for the purchase payment has expired). For the GMDB to apply, the annuitant, as of the seventh anniversary of each eligible contract year, must still be living and must be less than 81 years of age.

14. For Legacy I and Legacy II, the EGMDB is an alternative to the GMDB for nonqualified contracts or contracts used under an IRA plan. Under the EGMDB, the death benefit payable is the amount equal to the greatest of:

a. Contract value as of the day on which Lincoln Life approves the payment of the claim; or

b. the sum of all purchase payments less the sum of all withdrawals, partial annuitizations and premium taxes incurred; or

c. the highest contract value determined as follows:

(i) When the first of the annuitant, sole contract owner or, in the event the contract is owned by more than one person, the named contract owner or pre-designated joint owner dies, we determine the highest contract value;

(ii) this highest contract value is as of any contract anniversary from the time the EGMDB takes effect up to and including the decedent's age 80;

(iii) this highest contract value is then increased by purchase payments and decreased by partial withdrawals, partial annuitizations and premium taxes made, effected or incurred subsequent to the anniversary date on which the highest contract value is attained.

15. If the Legacy I or Legacy II contract has more than one joint owner, the GMDB or EGMDB death benefit will only be paid on the death of the named contract owner or pre-designated joint owner. If the contract owner does not make this pre-designation, the youngest joint owner will be the pre-designated joint owner. Only the cash surrender values will be paid upon the death of a non-pre-designated joint owner. If there are two or more joint owners, the surrender charge is waived only on the death of the named contract owner or pre-designated joint owner.

16. Lincoln Life now proposes to offer an enhancement option (''Enhancement Offer'') to Legacy I and Legacy II contract owners whose contracts have surrender charges equal to 2% or less of their contract value. The Enhancement Offer consists of two options (collectively the ''Offers''): (a) an immediate bonus credit equal to 2% of contract value (''Bonus Offer); or (b) an EGMDB at no additional cost (''EGMDB Offer''). An owner can elect only one of the options.

17. The existing contract will remain in place. However, in exchange for the selected enhancement option the entire contract value (excluding any bonus credit, if that option was selected) will be subject to new surrender charges as of the date the option is accepted. For purposes of calculating surrender charges, the contract value (excluding the bonus credit) will be treated as a new purchase payment. Any remaining surrender charges existing prior to the time of the election of the option will be waived.

18. The offer is only available for contracts sold in the nonqualified and IRA markets (excluding SEP or SARSEP markets), and this offer is not available for those contracts in which the primary

owner, pre-designated joint owner, or annuitant is over age 76.

19. For contract owners who elect the Bonus Offer or the EGMDB Offer, there will be no additional charges or any increase in existing charges other than the imposition of the new surrender charge.

20. Contract owners who elect the EGMDB Offer receive the EGMDB at no additional cost on the date the Offer is accepted. If the contract owner had previously elected the EGMDB when he or she purchased the contract (or when the EGMDB became available in his or her state) and is thus paying for the EGMDB, under the EGMDB Offer, if elected, the 0.15% charge for the EGMDB will be discontinued as of the date the Offer is accepted, and the death benefit at all times after the enhancement will in no event be less than the death benefit that would have been payable if the Enhancement Offer had not been accepted.

21. Contract owners may cancel the elected option for any reason within ten days (in some states longer) of the date the rider adding the option was received. Upon cancellation, Lincoln Life will waive the new surrender charge and re-establish the prior existing surrender charges, if any, as of the date of the receipt of the cancellation. The contract owner assumes the investment risk on the contract value during this period. If the Bonus Offer is cancelled according to the Right to Examine provision, the bonus credits will be revoked; however, Lincoln Life will assume the risk of investment loss on the bonus credits. Lincoln Life will also re-credit the mortality and expense risk and administrative charges proportionately attributable to the bonus credits. The contract owner will be put back into the same position as if he or she had never elected the Bonus Offer. Lincoln Life will recapture the bonus credit only upon the exercise of the free look privilege.

22. Regarding the implementation of the Offers, Lincoln proposes to make the offers directly, by providing eligible contract owners with information about the offers through an ''Offering Document'' sent from the Home Office. Contract owners will be directed to Lincoln Life or their registered representatives for further information. Contract owners who express an interest in the Offers will be given a prospectus.

23. Registered representatives who are responsible for a contract owner accepting the Bonus Offer or the EGMDB Offer will be paid a commission. The commission is less than what the registered representative would receive on the sale of a new Legacy contract.

24. The Offering Document will advise such contract owners that the Offers have been designed for those contract owners who intend to continue to hold their contracts as long-term investments. An explanation of the terms of each offer will be provided. The Offering Document will state that the offers are not intended for all contract owners, and that they are especially not appropriate for any contract owner who anticipates surrendering more than a portion of his or her contract in excess of the free withdrawal amount (greater of 10% of the contract value or 10% of purchase payments) within the surrender charge period. In this regard, the Offering Document will encourage contract owners to carefully evaluate their personal financial situation when deciding whether to accept or reject the Offers. In addition, the Offering Document will explain how a contract owner who elects to participate in one of the offers may avoid the applicable surrender charge if no more than the annual free withdrawal amount (10% of purchase payments) is surrendered and any subsequent purchase payments are maintained until the expiration of the applicable surrender charge period. In this regard, the Offering Document will state in clear plain English that if the amended contract is surrendered during the new surrender charge period: (a) The contract owner will pay surrender charges which may be substantial, that he or she would not have paid if the offer had not been accepted; and (b) a contract owner may be worse off than if he or she had rejected the offer. The Offering Document also will state that if the contract is owned by three or more persons and an owner who is not the named contract owner or a pre-designated joint owner dies during the new surrender period, the remaining contract owners could be worse off having accepted the Enhancement Offer because a new surrender charge will apply.

Applicants' Legal Analysis

1. The purpose of Section 11 is to prevent the practice of inducing exchanges solely for the purpose of exacting additional selling charges. While the sales representatives will receive a commission and there will be imposed a surrender charge, Applicants argue that based on the foregoing, one should readily conclude that the sole purpose of the Offer is not to exact selling charges but to offer significant benefits to the contact owners as inducement for them to remain contract owners of Lincoln Life.

2. Section 11(a) of the Act makes it unlawful for any registered open-end company, or any principal underwriter for such company, to make or cause to be made an offer to the holder of a security of such company, or of any other open-end investment company to exchange his security for a security in the same or another such company on any basis other than the relative net asset values of the respective securities to be exchanged, unless the terms of the offer have first been submitted to and approved by the Commission or are in accordance with Commission rules adopted under Section 11.

3. Section 11(c) of the Act, in pertinent part, requires, in effect, that any offer of exchange of the securities of a registered unit investment trust for the securities of any other investment company be approved by the Commission or satisfy applicable rules adopted under Section 11, regardless of the basis of the exchange.

4. The Annuity Accounts are registered under the Act as unit investment trusts. Thus, the exchange offer constitutes an offer of exchange of two securities, each of which is offered by a registered unit investment trust. While Applicants would argue that the enhancement offer on its face is not subject to Section 11 because it does not involve the offer of exchange of two securities, nonetheless, it would appear that it is the Commission's current position that offers such as the Enhancement Offer do fall within the ambit of Section 11.

5. According to the Commission, Congress enacted Section 11 to prevent ''switching,'' *i.e.*, ''the practice of inducing security holders of one investment company to exchange their securities for those of a different investment company solely for the purpose of exacting additional selling charges.'' According to the Commission, ''[I]nvestors in 'fixed trusts,' now known as unit investment trusts (''UIT''), were found to be particularly vulnerable to switching operations. In order to earn another sales commission, a UIT sponsor would often pressure unit holders into exchanging their units for those of another of the sponsor's trusts.''

6. Section 11(c) of the Act requires Commission approval (by order or by rule) of any exchange, regardless of its basis, involving securities issued by a unit investment trust because investors in unit investment trusts were found by Congress to be particularly vulnerable to switching transactions. Applicants believe that the potential for harm to investors perceived in switching by

Congress was its use to extract additional sales charges from those investors.

7. As opposed to providing a means of extracting additional sales charges, as contemplated by the prohibitions of Section 11, Applicants argue that the proposed Offers provide enduring benefits to the contract owners. To the extent that a contract owner ultimately did not benefit from accepting the offer, it would be as a result of his or her own subsequent decision to surrender the enhanced contract in circumstances that would have been the subject of very explicit disclosure. If the contract is owned by three or more persons an an owner who is not the named contract owner or a pre-designated joint owner dies during the new surrender charge period, the remaining contract owners also could be worse off having accepted the Enhancement Offer because the new CDSC will apply. This disclosure provided in the offering materials will give contract owners sufficient information to determine what is best for them.

8. Rule 11a–2, by its express terms, provides for Commission approval of certain types of offers of exchange of one variable annuity contract for another. Other than the relative net asset value requirement for the Bonus Offer, the only part of Rule 11a–2 that would not be satisfied by the proposed Offers is the requirement that payments under the existing Legacy contracts be treated as if they had been made under the enhanced contracts on the dates actually made. This provision of Rule 11a–2 is often referred to as a ''tacking'' requirement because it has the effecting of ''tacking together'' the CDSC expiration periods of the exchanged and acquired contracts.

9. Applicants believe that tacking should be viewed as a useful way to avoid the need to scrutinize the terms of an offer of exchange to make sure that there is no abuse. Tacking is not a requirement of Section 11. Rather, it is a creation of a rule designed to approve the terms of offers of exchange ''sight unseen.'' Tacking focuses on the closest thing to multiple deduction of sales loads that is possible in a CDSC contract—multiple exposure to sales loads upon surrender or redemption. If tacking and other safeguards of Rule 11a–2 are present, there is no need for the Commission or its staff to evaluate the terms of the offer. The absence of tacking in this fully scrutinized Section 11 application will have no import in offers made pursuant to the rule on a ''sight unseen'' basis.

10. In addition to providing extensive disclosure, the Offers will only be made to contract owners who are at or close to the expiration of their surrender charge period.

11. No tacking is required when Lincoln Life's competitors offer their variable annuity contracts to owners of the Legacy I and Legacy II contracts or indeed when Lincoln makes such an offer to competitors' contract owners. In those exchanges, unlike the Offers proposed here, the exchanging contract owner actually must pay any remaining CDSC on the exchanged contract at the time of the exchange. The broker/dealers that will be making recommendations to their customers regarding these offers are required to satisfy the suitability requirements. Therefore, while tacking is not present, the investor protection afforded by the suitability requirements imposed upon the broker/dealer and the additional disclosure will be. The contract owner who is fully informed of the advantages and disadvantages of the proposed offers is the person who knows best whether the benefits of the offer are appropriate for him or her.

12. By this Application, Applicants are seeking a ''level playing field'' to permit Lincoln to compete with offers of competitors to its longstanding contract owners. Absent the requested relief, there can be no such offers, as imposition of the Rule 11a–2 tacking requirement would make it unfeasible for the offers to be made. Applicants assert that approval of the terms of the Offers is warranted, among other reasons, because it will promote competition in the variable annuity marketplace. Such approval will foster competition by allowing Lincoln Life to make an offer to its own contract owners which would provide an attractive additional option for contract owners' consideration. Applicants argue that the Offers do not remove choices available; rather competition is increased if Lincoln Life is able to compete on a ''level playing field'' with its competitors.

Applicants' Conditions

If the requested order is granted, Applicants consent to the following conditions, which are intended to support the understanding that the Offers are being made to contract owners who expect to persist:

1. The Offering Document will contain, as relevant, concise, plain English statements that:

(a) The Enhancement Offer is suitable only for contract owners who expect to hold their contracts as long term investments; and

(b)(i) if a contract owner surrenders contract value over and above the free withdrawal amount before the expiration of the new surrender charge period that applies to the contract value as of the date the Enhancement Offer is accepted, the contract owner will pay surrender charges, which may be substantial, that he or she would not have paid had the offer not been accepted;

(ii) if the contract is owned by three or more persons and an owner who is not the named contract owner or a pre-designated joint owner dies during the new surrender charge period, the remaining contract owners could be worse off having accepted the Enhancement Offer because a new surrender charge will apply; and

(iii) the contract owner may be worse off than if he or she had rejected the Enhancement Offer.

2. Lincoln Life will send the Offering Document directly to eligible contract owners. A contract owner choosing either the Bonus Offer or the EGMDB Offer will then complete and sign an election form which will prominently restate in concise, plain English the statements required in Condition No. 1, and will return it to Lincoln Life. If the election form or the internal exchange form is more than two pages long, Lincoln Life will use a separate document to obtain the contract owner's acknowledgment of the statements referred to in Condition No. 1.

3. Lincoln Life will maintain the following separately identifiable records in an easily accessible place, for the time periods specified below in this Condition 3 for review by the Commission upon request:

(a) Records showing the level of acceptances of the Enhancement Offer and how these acceptances relate to the total number of contract owners eligible to participate in the offer (quarterly as a percentage of the number eligible);

(b) copies of any form of Offering Document, and any other written materials or scripts for presentations by representatives regarding the Enhancement Offer that Lincoln Life either prepares or approves, including the dates that such Offering Document and materials were used;

(c) records containing information about each Enhancement Offer election that occurs, including the name of the contract owner; the old and new contract numbers; the amount of CDSC waived on the transaction; bonus credit paid; if the EGMDB is elected or the EGMDB fee is waived; the name and CRD number of the registered representative soliciting the Enhancement Offer, firm affiliation, branch office address and telephone number of the registered representative

soliciting the Enhancement Offer; the name and CRD number of the registered representative's broker-dealer; commission paid; the election form (and separate document, if any, used to obtain the contract owner's acknowledgment of the statements required in Condition No. 1) showing the name, date of birth, address and telephone number of the contract owner and the date the election form (or separate document) was signed; amount of contract value at the time of election of the Enhancement Offer; and persistency information relating to the enhanced contract, including the date of any subsequent surrender and the amount of CDSC paid on the surrender; and

(d) logs showing a record of any contract owner complaint about the Enhancement Offer; state insurance department inquiries about the Enhancement Offer; or litigation, arbitration or other proceedings regarding any enhanced contract. The logs will include the date of the complaint or commencement of the proceeding, name and address of the person making the complaint or commencing the proceeding, nature of the complaint or proceeding, and the persons named or involved in the complaint or proceeding.

Applicants will retain records specified in (a) and (d) for a period of six years after the date the records are created; records specified in (b) for a period of six years after the date of last use; and records specified in (c) for a period of two years after the date that the CDSC period of the Enhanced Contract ends with respect to contract value as of the date the Enhancement Offer is accepted.

4. The Offering Document will disclose in concise plain English each aspect of the enhanced contracts that will be less favorable than the old contracts.

Conclusion

For all the reasons discussed above, Applicants submit (1) that the Offers provide additional benefits to contract owners, may be advantageous for the owners to whom they will be offered, and do not contravene any policy or purpose of Section 11, and (2) that approval of Applicants' Offers as described, and subject to the conditions set forth in this Application, is appropriate in the public interest and consistent with the protection of investors and the purposes fairly intended by the policies and provisions of the Act. Therefore, Applicants submit that the Commission should grant the approval sought by this Application.

For the Commission, by the Division of Investment Management, pursuant to delegated authority.

Margaret H. McFarland,

Deputy Secretary.

[FR Doc. 03–4506 Filed 2–25–03; 8:45 am]

BILLING CODE 8010–01–P

SECURITIES AND EXCHANGE COMMISSION

[Release No. 34–47372; File No. SR–CHX–2003–02]

Self-Regulatory Organizations; Notice of Filing and Immediate Effectiveness of Proposed Rule Change by the Chicago Stock Exchange, Incorporated to Reinstate and Extend a Pilot Rule Interpretation Relating to Trading of Nasdaq/NM Securities in Subpenny Increments

February 14, 2003.

Pursuant to Section 19(b)(1) of the Securities Exchange Act of 1934 (''Act''),[1] and Rule 19b–4 thereunder,[2] notice is hereby given that on January 30, 2003, the Chicago Stock Exchange, Incorporated (''CHX'' or ''Exchange'') filed with the Securities and Exchange Commission (''Commission'') the proposed rule change as described in Items I, II and III below, which Items have been prepared by the Exchange. The Exchange filed the proposal pursuant to Section 19(b)(3)(A) of the Act,[3] and Rule 19b–4(f)(6)[4] thereunder, which renders the proposal effective upon filing with the Commission. The Commission is publishing this notice to solicit comments on the proposed rule change from interested persons.

I. Self-Regulatory Organization's Statement of the Terms of Substance of the Proposed Rule Change

The Exchange proposes to extend through May 31, 2003, the pilot rule interpretation relating to the trading of Nasdaq/NM securities in subpenny increments. The CHX does not propose to make any substantive or typographical changes to the pilot; the only change is to extend the pilot's expiration date through May 31, 2003. The text of the proposal is available at the Commission and at the CHX.

[1] 15 U.S.C. 78s(b)(1).

[2] 17 CFR 240.19b–4.

[3] 15 U.S.C. 78s(b)(3)(A).

[4] 17 CFR 240.19b–4(f)(6). The Commission waived the 5-day pre-filing notice requirement.

II. Self-Regulatory Organization's Statement of the Purpose of, and Statutory Basis for, the Proposed Rule Change

In its filing with the Commission, the CHX included statements concerning the purpose of and basis for its proposal and discussed any comments it received regarding the proposal. The text of these statements may be examined at the places specified in Item IV below. The CHX has prepared summaries, set forth in Sections A, B and C below, of the most significant aspects of such statements.

A. Self-Regulatory Organization's Statement of the Purpose of, and Statutory Basis for, the Proposed Rule Change

1. Purpose

On April 6, 2001, the Commission approved, on a pilot basis through July 9, 2001, a pilot rule interpretation (CHX Article XXX, Rule 2, Interpretation and Policy .06 ''Trading in Nasdaq/NM Securities in Subpenny Increments'')[5] that requires a CHX specialist (including a market maker who holds customer limit orders) to better the price of a customer limit order in his book which is priced at the national best bid or offer by at least one penny if the specialist determines to trade with an incoming market or marketable limit order. The pilot has been extended five times and is set to expire on January 31, 2003.[6] The CHX now proposes to extend the pilot through May 31, 2003. The CHX proposes no other changes to the pilot, other than extending it through May 31, 2003.

2. Statutory Basis

The CHX believes the proposal is consistent with the requirements of the Act and the rules and regulations thereunder that are applicable to a national securities exchange, and, in particular, with the requirements of Section 6(b).[7] In particular, the CHX believes the proposal is consistent with

[5] *See* Securities Exchange Act Release No. 44164 (April 6, 2001), 66 FR 19263 (April 13, 2001) (SR–CHX–2001–07).

[6] *See* Securities Exchange Act Release Nos. 44535 (July 10, 2001), 66 FR 37251 (July 17, 2001) (extending the pilot through November 5, 2001); 45062 (November 15, 2001), 66 FR 58758 (November 23, 2001) (extending the pilot through January 14, 2002); 45386 (February 1, 2002), 67 FR 6062 (February 8, 2002) (extending the pilot through April 15, 2002); 45755 (April 15, 2002), 67 FR 19607 (April 22, 2002) (extending the pilot through September 30, 2002); and 46587 (October 2, 2002), 67 FR 63180 (October 10, 2002) (extending the pilot through January 31, 2003).

[7] 15 U.S.C. 78f(b).

Section 6(b)(5) of the Act[8] in that it is designed to promote just and equitable principles of trade, to remove impediments to, and to perfect the mechanism of, a free and open market and a national market system, and, in general, to protect investors and the public interest.

B. Self-Regulatory Organization's Statement on Burden on Competition

The Exchange does not believe that the proposed rule change will impose any inappropriate burden on competition.

C. Self-Regulatory Organization's Statement on Comments on the Proposed Rule Change Received From Members, Participants or Others

No written comments were either solicited or received.

III. Date of Effectiveness of the Proposed Rule Change and Timing for Commission Action

Because the foregoing proposed rule change does not:

(i) Significantly affect the protection of investors or the public interest;

(ii) impose any significant burden on competition; and

(iii) become operative for 30 days from the date on which it was filed, or such shorter time as the Commission may designate,

it has become effective pursuant to Section 19(b)(3)(A) of the Act[9] and Rule 19b–4(f)(6) thereunder.[10] At any time within 60 days of the filing of the proposed rule change, the Commission may summarily abrogate such rule change if it appears to the Commission that such action is necessary or appropriate in the public interest, for the protection of investors, or otherwise in furtherance of the purposes of the Act.

The Exchange has requested that the Commission waive both the 5-day notice and the 30-day operative delay. The Commission believes waiving the 5-day notice and 30-day operative delay is consistent with the protection of investors and the public interest. Acceleration of the operative date will allow the pilot to continue uninterrupted through May 31, 2003, and allow the Commission to further study the trading of Nasdaq/NM securities in subpenny increments. For these reasons, the Commission designates the proposal to be effective and operative upon filing with the Commission.[11]

IV. Solicitation of Comments

Interested persons are invited to submit written data, views, and arguments concerning the foregoing, including whether the proposal is consistent with the Act. Persons making written submissions should file six copies thereof with the Secretary, Securities and Exchange Commission, 450 Fifth Street, NW, Washington, DC 20549–0609. Copies of the submission, all subsequent amendments, all written statements with respect to the proposed rule change that are filed with the Commission, and all written communications relating to the proposed rule change between the Commission and any person, other than those that may be withheld from the public in accordance with the provisions of 5 U.S.C. 552, will be available for inspection and copying in the Commission's Public Reference Room. Copies of such filing will also be available for inspection and copying at the principal office of the CHX. All submissions should refer to file number SR–CHX–2003–02 and should be submitted by March 19, 2003.

For the Commission, by the Division of Market Regulation, pursuant to delegated authority.[12]

Margaret H. McFarland,

Deputy Secretary.

[FR Doc. 03–4505 Filed 2–25–03; 8:45 am]

BILLING CODE 8010–01–P

[8] 15 U.S.C. 78f(b)(5).

[9] 15 U.S.C. 78s(b)(3)(A).

[10] 17 CFR 240.19b–4(f)(6).

[11] For purposes only of accelerating the operative date of this proposal, the Commission has considered the proposed rule's impact on efficiency, competition, and capital formation. 15 U.S.C. 78c(f).

[12] 17 CFR 200.30–3(a)(12).

SECURITIES AND EXCHANGE COMMISSION

[Release No. 34–47383; File No. SR–Phlx–2002–79]

Self-Regulatory Organizations; Order Granting Approval of Proposed Rule Change by the Philadelphia Stock Exchange, Inc., Relating to the Application Fee and the ETP Application Fee

February 20, 2003.

On December 17, 2002, the Philadelphia Stock Exchange, Inc. (''Phlx''), filed with the Securities and Exchange Commission (''Commission''), pursuant to section 19(b)(1) of the Securities Exchange Act of 1934 (''Act''),[1] and rule 19b–4 thereunder,[2] a proposed rule change relating to its Application and ETP Application Fees. Notice of the proposed rule change was published for comment in the **Federal Register** on January 17, 2003.[3] No comments were received on the proposed rule change.

In order to generate additional revenue, the Exchange has proposed to amend its schedule of dues, fees and charges to increase its current Application Fee from $200 to $350. The Exchange also proposes to delete a separate reference to the ETP Application Fee in order to prevent confusion.

The Commission finds that the proposed rule change is consistent with the requirements of the Act and the rules and regulations thereunder applicable to a national securities exchange.[4] Specifically, the Commission believes that the proposal is consistent with section 6(b)(4) of the Act,[5] in that it equitably allocates reasonable dues, fees, and other charges among Exchange members and issuers and other persons using its facilities, and that it fairly allocates costs associated with application processing to those individuals and firms making such applications.

It is therefore ordered, pursuant to section 19(b)(2) of the Act,[6] that the proposed rule change (File No. SR–Phlx–2002–79) be, and it hereby is, approved.

For the Commission, by the Division of Market Regulation, pursuant to delegated authority.[7]

Margaret H. McFarland,

Deputy Secretary.

[FR Doc. 03–4504 Filed 2–25–03; 8:45 am]

BILLING CODE 8010–01–P

[1] 15 U.S.C. 78s(b)(1).

[2] 17 CFR 240.19b–4.

[3] *See* Securities Exchange Act Release No. 47148 (January 9, 2003), 68 FR 2614.

[4] In approving this proposal, the Commission has considered the proposed rule's impact on efficiency, competition, and capital formation. 15 U.S.C. 78(c)(f).

[5] 15 U.S.C. 78f(b)(4).

[6] 15 U.S.C. 78s(b)(2).

[7] 17 CFR 200.30–3(a)(12).

DEPARTMENT OF TRANSPORTATION

Research and Special Programs Administration

Office of Hazardous Materials Safety; Notice of Application for Modification of Exemption

AGENCY: Research and Special Programs Administration, DOT.

ACTION: List of Applications for Modification of Exemptions.

SUMMARY: In accordance with the procedures governing the application for, and the processing of, exemptions from the Department of Transportation's Hazardous Materials Regulations (49 CFR Part 107, Subpart B), notice is hereby given that the Office of Hazardous Materials Safety has received the applications described herein. This notice is abbreviated to expedite docketing and public notice. Because the sections affected, modes of transportation, and the nature of application have been shown in earlier Federal Register publications, they are not repeated here. Requests for modifications of exemptions (*e.g.* to provide for additional hazardous materials, packaging design changes, additional mode of transportation, *etc.*) are described in footnotes to the application number. Application numbers with the suffix ''M'' denote a modification request. These applications have been separated from the new applications for exemptions to facilitate processing.

DATES: Comments must be received on or before March 13, 2003.

ADDRESS COMMENTS TO: Records Center, Research and Special Programs, Administration, U.S. Department of Transportation, Washington, DC 20590.

Comments should refer to the application number and be submitted in triplicate. If confirmation of receipt of comments is desired, include a self-addressed stamped postcard showing the exemption number.

FOR FURTHER INFORMATION CONTACT: Copies of the applications are available for inspection in the Records Center, Nassif Building, 400 7th Street SW., Washington, DC or at *http://dms.dot.gov.*

This notice of receipt of applications for modification of exemptions is published in accordance with Part 107 of the Federal hazardous materials transportation law (49 U.S.C. 5117(b); 49 CFR 1.53(b)).

Issued in Washington, DC, on February 20, 2003.

R. Ryan Posten,

Exemptions Program Officer, Office of Hazardous Materials, Exemptions and Approvals.

Application No.	Docket No.	Applicant	Modification of exemption
10232–M		Sexton Can Company, Inc., Cambridge, MA [1]	10232
11670–M		Schlumberger-Oilphase, Dyce, Aberdeen Scotland, UK [2]	11670
11691–M		Cott Concentrates, Columbus, GA [3]	11691
11970–M	RSPA–97–2993	ExxonMobil Chemical Company, Houston, TX [4]	11970
13143–M	RSPA–02–13568.	GS Battery USA, Inc., City of Industry, CA [5]	13143
13187–M		Syncor Radiation Mgmt, Cleveland, OH [6]	13187

[1] To modify the exemption to authorize a capacity increase to 40 cubic inches of the non-refillable, non-DOT specification container for the transportation of Division 2.2 materials.

[2] To modify the exemption to authorize the use of two newly designed non-DOT specification oil well sampling cylinders with an increased service pressure to 25,000 psig for the transportation of Division 2.1 materials.

[3] To modify the exemption to authorize the transportation of an additional Class 8 material via cargo vessel.

[4] To modify the exemption to authorize the transportation of a hazardous material using an alternative shipping description of Division 4.2, 4.3 transported in non-DOT specification steel portable tanks.

[5] To reissue the exemption originally issued on an emergency basis for the transportation of a Class 8 material in non-DOT specification packaging.

[6] To reissue the exemption originally issued on an emergency basis for the use of non-DOT specification packaging for the transportation of Division 2.2 materials.

[FR Doc. 03–4556 Filed 2–25–03; 8:45 am]

BILLING CODE 4910–60–M

DEPARTMENT OF TRANSPORTATION

Research and Special Programs Administration

Office of Hazardous Materials Safety; Notice of Applications for Exemptions

AGENCY: Research and Special Programs Administration, DOT.

ACTION: List of Applicants for Exemptions.

SUMMARY: In accordance with the procedures governing the application for, and the processing of, exemptions from the Department of Transportation's Hazardous Materials Regulations (49 CFR Part 107, Subpart B), notice is hereby given that the Office of Hazardous Materials Safety has received the applications described herein. Each mode of transportation for which a particular exemption is requested is indicated by a number in the ''Nature of Application'' portion of the table below as follows: 1—Motor vehicle, 2—Rail freight, 3—Cargo vessel, 4—Cargo aircraft only, 5—Passenger-carrying aircraft.

DATES: Comments must be received on or before March 28, 2003.

ADDRESS COMMENTS TO: Records Center, Research and Special Programs Administration, U.S. Department of Transportation, Washington, DC 20590.

Comments should refer to the application number and be submitted in triplicate. If confirmation of receipts of comments is desired, include a self-addressed stamped postcard showing the exemption application number.

FOR FURTHER INFORMATION: Copies of the application (See Docket Number) are available for inspection at the New Docket Management Facility, PL–401, at the U.S. Department of Transportation, Nassif Building, 400 7th Street, SW., Washington, DC 20590 or at *http://dms.dot.gov.*

This notice of receipt of applications for new exemption is published in accordance with Part 107 of the Federal hazardous materials transportation law (49 U.S.C. 5117(b); 49 CFR 1.53(b)).

Issued in Washington, DC, on February 20, 2003.

R. Ryan Posten,

Exemptions Program Officer, Office of Hazardous Materials, Exemptions and Approvals.

NEW EXEMPTIONS

Application No.	Docket No.	Applicant	Regulation(s) Affected	Nature of Exemption Thereof
13167–N	.....	Eastman Kodak Company, Rochester, NY.	49 CFR 173.301(f), 173.304	To authorize the transportation in commerce of anhydrous ammonia in a DOT–E 11725 cylinder which is removed from its original outer packaging and installed in a device as part of an environmental conditioning system. (Mode 1.)
13199–N	.....	HVAC Portable Systems, Inc., Houston, TX.	49 CFR 173.302(c), 173.306(e)(1).	To authorize the transportation in commerce of reconditioned refrigeration units containing Division 2.2 hazardous materials. (Mode 1.)
13200–N	.....	Southern Air Inc., Columbus, OH.	49 CFR 172.101 Col. 9B, 172.204(c)(3), 173.27(b)(2)(3), 175.30(a)(1).	To authorize the transportation in commerce of Class 1 explosives which are forbidden or exceed quantities as presently authorized. (Mode 4.)
13201–N	.....	Powsus Inc., Fort Pierce, FL.	49 CFR 173.309	To authorize the transportation in commerce of fire extinguishers of plastic construction equipped with steel or aluminum fittings. (Modes 1, 2, 3, 4, 5.)
13202–N	.....	CyPlus Corporation, Parsippany, NJ.	49 CFR 173.242	To authorize the transportation in commerce of dry sodium cyanide, Division 6.1 in alternative bulk packaging inside trailers or freight containers. (Modes 1, 3.)

[FR Doc. 03–4557 Filed 2–25–03; 8:45 am]

BILLING CODE 4910–60–M

DEPARTMENT OF TRANSPORTATION

Bureau of Transportation Statistics

Agency Information Collection; Activity Under OMB Review; Part 249 Preservation of Records

AGENCY: Bureau of Transportation Statistics (BTS), DOT.

ACTION: Notice.

SUMMARY: In compliance with the Paperwork Reduction Act of 1995, Public Law 104–13, the Bureau of Transportation Statistics invites the general public, industry and other governmental parties to comment on the continuing need for and usefulness of BTS requiring certificated air carriers to preserve accounting, records, consumer complaint letters, reservation reports and records, system reports of aircraft movements, etc.

DATES: Written comments should be submitted by April 28, 2003.

ADDRESSES: Comments should be directed to: Office of Airline Information, K–14, Room 4125, Bureau of Transportation Statistics, 400 Seventh Street, SW., Washington, DC 20590–0001, FAX NO. 366–3383 or e-mail *bernard.stankus@bts.gov.*

Comments: Comments should identify the associated OMB approval # 2138–0006. Persons wishing the Department to acknowledge receipt of their comments must submit with those comments a self-addressed stamped postcard on which the following statement is made: Comments on OMB # 2138–0006. The postcard will be date/time stamped and returned.

FOR FURTHER INFORMATION CONTACT: Bernie Stankus, Office of Airline Information, K–14, Room 4125, Bureau of Transportation Statistics, 400 Seventh Street, SW., Washington, DC 20590–0001, (202) 366–4387.

SUPPLEMENTARY INFORMATION:

OMB Approval No. 2138–0006.

Title: Preservation of Air Carrier Records—14 CFR part 249.

Form No.: None.

Type Of Review: Extension of a currently approved recordkeeping requirement.

Respondents: Certificated air carriers and public charter operators.

Number of Respondents: 120 certificated air carriers. 300 public charter operators.

Estimated Time per Response: 3 hours per certificated air carrier. 1 hour per public charter operator.

Total Annual Burden: 660 hours.

Needs and Uses: Part 249 requires the retention of records such as: general and subsidiary ledgers, journals and journal vouchers, voucher distribution registers, accounts receivable and payable journals and ledgers, subsidy records documenting underlying financial and statistical reports to DOT, funds reports, consumer records, sales reports, auditors' and flight coupons, air waybills, etc. Depending on the nature of the document, the carrier may be required to retain the document for a period of 30 days to 3 years. Public charter operators and overseas military personnel charter operators must retain documents which evidence or reflect deposits made by each charter participant and commissions received by, paid to, or deducted by travel agents, and all statements, invoices, bills and receipts from suppliers or furnishers of goods and services in connection with the tour or charter. These records are retained for 6 months after completion of the charter program.

Not only is it imperative that carriers and charter operators retain source documentation, but it is critical that we ensure that DOT has access to these records. Given DOT's established information needs for such reports, the underlying support documentation must be retained for a reasonable period of time. Absent the retention requirements, the support for such reports may or may not exist for audit/validation purposes and the relevance and usefulness of the carrier submissions would be impaired, since the data could not be verified to the source on a test basis.

Under the Confidential Information Protection and Statistical Efficiency Act of 2002 (44 U.S.C. 3501 note), a statistical agency must clearly distinguish any information it collects for non-statistical purposes. Respondents and the public are hereby notified that BTS uses the information it collects under this OMB approval for non-statistical purposes including, but not limited to, publication of both Respondent's identity and its data, submission of the information to agencies outside BTS for review, analysis and possible use in regulatory and other administrative matters.

Issued in Washington, DC, on February 14, 2003.

Donald W. Bright,

Assistant Director, Airline Information, Bureau of Transportation Statistics.

[FR Doc. 03–4554 Filed 2–25–03; 8:45 am]

BILLING CODE 4910–62–P

DEPARTMENT OF TRANSPORTATION

Bureau of Transportation Statistics

Agency Information Collection; Activity Under OMB Review; Report of Extension of Credit to Political Candidates—Form 183

AGENCY: Bureau of Transportation Statistics (BTS), DOT.

ACTION: Notice.

SUMMARY: In compliance with the Paperwork Reduction Act of 1995, Public Law 104–13, the Bureau of Transportation Statistics invites the general public, industry and other governmental parties to comment on the continuing need for and usefulness of BTS collecting reports from air carriers on the aggregated indebtedness balance of a political candidate or party for Federal office. The reports are required when the aggregated indebtedness is over $5,000 on the last day of a month.

DATES: Written comments should be submitted by April 28, 2003.

ADDRESSES: Comments should be directed to: Office of Airline Information, K–14, Room 4125, Bureau of Transportation Statistics, 400 Seventh Street, SW., Washington, DC 20590–0001, FAX NO. 366–3383 or e-mail *bernard.stankus@bts.gov*.

Comments: Comments should identify the associated OMB approval # 2138–0016. Persons wishing the Department to acknowledge receipt of their comments must submit with those comments a self-addressed stamped postcard on which the following statement is made: Comments on OMB # 2138–0016. The postcard will be date/time stamped and returned.

FOR FURTHER INFORMATION CONTACT: Bernie Stankus, Office of Airline Information, K–14, Room 4125, Bureau of Transportation Statistics, 400 Seventh Street, SW., Washington, DC 20590–0001, (202) 366–4387.

SUPPLEMENTARY INFORMATION:

OMB Approval No.: 2138–0016.

Title: Report of Extension of Credit to Political Candidates—Form 183 14 CFR part 374a.

Form No.: 183.

Type Of Review: Extension of a currently approved collection.

Respondents: Certificated air carriers.

Number of Respondents: 2 (Monthly Average).

Number of Responses: 24.

Estimated Time per Response: 1 hour.

Total Annual Burden: 24 hours.

Needs and Uses: The Department uses this form as the means to fulfill its obligation under the Federal Election Campaign Act of 1971 (the Act). The Act's legislative history indicates that one of its statutory goals is to prevent candidates for Federal political office from incurring large amounts of unsecured debt with regulated transportation companies (*e.g.* airlines). This information collection allows the Department to monitor and disclose the amount of unsecured credit extended by airlines to candidates for Federal office. All certificated air carriers are required to submit this information.

The Confidential Information Protection and Statistical Efficiency Act of 2002 (44 U.S.C. 3501 note), requires a statistical agency to clearly identify information it collects for non-statistical purposes. BTS hereby notifies the respondents and the public that BTS uses the information it collects under this OMB approval for non-statistical purposes including, but not limited to, publication of both Respondent's identity and its data, submission of the information to agencies outside BTS for review, analysis and possible use in regulatory and other administrative matters.

Issued in Washington, DC, on February 14, 2003.

Donald W. Bright,

Assistant Director, Airline Information, Bureau of Transportation Statistics.

[FR Doc. 03–4555 Filed 2–25–03; 8:45 am]

BILLING CODE 4910–62–P

DEPARTMENT OF THE TREASURY

Office of the Comptroller of the Currency

[Docket No. 03–04]

Notice of Request for Preemption Determination or Order

AGENCY: Office of the Comptroller of the Currency, Treasury.

ACTION: Notice and request for comments.

SUMMARY: The Office of the Comptroller of the Currency (OCC) is publishing for comment a request by National City Bank, N.A., National City Bank of Indiana, N.A., and their operating subsidiaries, National City Mortgage Company and First Franklin Financial Company (referred to collectively in this notice as National City) for a determination or order under 12 U.S.C. 24(Seventh), 12 U.S.C. 371 and the OCC's implementing regulations, that the Georgia Fair Lending Act does not apply to National City. The purpose of this notice is to afford interested persons and affected parties an opportunity to submit comments before the OCC issues any determination or order responding to this request.

DATES: Comments must be received on or before March 28, 2003.

ADDRESSES: Please direct your comments to: Office of the Comptroller of the Currency, 250 E Street, SW., Public Information Room, Mailstop 1–5, Attention: Docket No. 03–04, Washington, DC 20219, fax number (202) 874–4448, or Internet address: *regs.comments@occ.treas.gov*. Due to delays in paper mail delivery in the Washington area, commenters are encouraged to submit their comments by fax or e-mail. Comments may be inspected and photocopied at the OCC's Public Reference Room, 250 E Street, SW., Washington, DC 20219. You can make an appointment to inspect or photocopy the comments by calling (202) 874–5043.

FOR FURTHER INFORMATION CONTACT: Michele Meyer, Counsel, Legislative and Regulatory Activities Division, (202) 874–5090.

SUPPLEMENTARY INFORMATION: The Georgia Fair Lending Act (GFLA) [1] became effective October 1, 2002. The GFLA restricts the ability of creditors or servicers to charge certain fees and engage in certain practices for three categories of loans defined by the GFLA: ''home loans,'' ''covered home loans,'' and ''high-cost home loans.'' The characterization of a loan within each of these categories depends on the annual percentage rate and the amount of points and fees charged.[2] All ''home loans'' are subject to certain restrictions on the terms of credit and loan-related fees, including prohibitions on the financing of credit insurance, debt cancellation coverage or suspension coverage, and limitations on late fees and payoff statement fees.

In addition to the restrictions on ''home loans,'' ''covered home loans'' are subject to restrictions on the number of times a loan may be refinanced and the circumstances in which a refinancing may occur. For example, the GFLA prohibits a creditor from refinancing an existing home loan that is less than five years old with a ''covered home loan'' that does not provide a reasonable ''tangible net benefit'' to the borrower considering all the circumstances.

''High-cost home loans'' are subject to the restrictions on ''home loans'' and ''covered home loans,'' as well as numerous disclosure requirements and restrictions on the terms of credit and

[1] The GFLA is to be codified as GA Code. Ann. §§ 7–6A–1 *et seq.*

[2] *See* GFLA § 7–6A–2.

loan-related fees. Creditors must disclose to borrowers that the loan is high-cost, and borrowers must attend loan counseling before the creditor may make the loan. In addition, the GFLA prohibits pre-payment penalties, balloon payments, negative amortization, increases in the interest rates after default, advance payments from loan proceeds, fees to modify, renew, extend, amend or defer a payment, and accelerating payments at the creditor's or servicer's sole discretion.

National City requests the OCC to issue a determination or order that 12 U.S.C. 24(Seventh), 12 U.S.C. 371 and their implementing regulations preempt the GFLA. A copy of the request appears as an Appendix to this notice. We will publish any final determination or order responding to National City's request in the **Federal Register**.

Regardless of the ultimate conclusion reached regarding preemption of the GFLA or any other similar state or local law, abusive and predatory lending practices that take unfair advantage of borrowers, or have a detrimental effect on communities, may violate a number of *federal* laws, and do conflict with the high standards by which the OCC expects national banks to conduct their operations. Accordingly, concurrent with issuance of this Notice of Request for Preemption Determination or Order, the OCC is issuing two Advisory Letters. Advisory Letter 2003–2, ''Guidelines for National Banks to Guard Against Predatory and Abusive Lending Practices,'' February 21, 2003, and Advisory Letter 2003–3, ''Avoiding Predatory and Abusive Lending Practices in Brokered and Purchased Loans,'' February 21, 2003. Together these two Advisory Letters set forth standards that should assure that national banks are not directly involved, or indirectly associated with, predatory or abusive lending practices.

Issues Presented by National City's Request

National City has the asked the OCC to determine that 12 U.S.C. 24(Seventh) and 371 preempt the GFLA. This request requires determining whether ''Congress, in enacting the Federal Statute, intend[ed] to exercise its constitutionally delegated authority to set aside the laws of a State.'' *Barnett Bank of Marion County, N.A.* v. *Nelson, et al.*[3]

Central to the issues raised by National City is 12 U.S.C. 371, which vests in the OCC comprehensive authority to regulate and restrict the real estate lending activities of national banks. Section 371 provides:

> [a]ny national banking association may make, arrange, purchase or sell loans or extensions of credit secured by liens on interests in real estate, subject to section 1828(o) of this title and such restrictions and requirements as the Comptroller of the Currency may prescribe by regulation or order.

The exercise of the powers granted by section 371 is not conditioned on compliance with any state requirement.[4] Notably, the exercise of powers under that section is subject only to such rules and regulations as the Comptroller may prescribe.

In *Barnett,* the Supreme Court analyzed a similarly structured statute, 12 U.S.C. 92 and the extent to which section 92 leaves room for state regulation of the activities the statute authorizes. There, the Supreme Court stated that:

> [section 92's] language suggests a broad, not a limited, permission. That language says, without relevant qualification, that national banks ''may * * * act as the agent'' for insurance sales. 12 U.S.C. 92. It specifically refers to ''rules and regulations'' that will govern such sales, while citing as their source not state law, but the federal Comptroller of the Currency.[5]

The Court concluded that ''where Congress has not expressly conditioned the grant of ''power'' upon a grant of state permission, the Court has ordinarily found that no such condition applies.''[6]

The Congressional delegation to the Comptroller of authority under section 371 mentions only conditions imposed by the OCC for national banks pursuant to section 1828(o) and ''such restrictions and requirements as the Comptroller of the Currency may prescribe by regulation or order.'' It makes no mention of conditions imposed by state law. Citing the judicial maxim of statutory interpretation *expressio unius est exclusio alterius* (''mention of one thing implies exclusion of another''), National City contends that this plain language evidences a Congressional intent to permit only the OCC to impose conditions on national bank real estate lending regulation, leaving no room for state involvement.

The legislative history of section 371 lends support to this construction. National banks' real estate lending activities have consistently been subject to comprehensive Federal regulation ever since the authority to lend on the security of real estate was first granted to them in the Federal Reserve Act of 1913. For many years, national banks' real estate lending authority was governed by the express terms of section 371. As originally enacted in 1913, section 371 contained a limited grant of authority to national banks to lend on the security of ''improved and unencumbered farm land, situated within its Federal reserve district.''[7] In addition to the geographic limits inherent in this authorization, the Federal Reserve Act also imposed limits on the term and amount of each loan as well as an aggregate lending limit. Over the years, section 371 was repeatedly amended to broaden the types of real estate loans national banks were permitted to make, to expand geographic limits, and to modify loan term limits and per-loan and aggregate lending limits. In 1982, Congress removed these ''rigid statutory limitations''[8] in favor of a broad provision authorizing national banks to ''make, arrange, purchase, or sell loans or extensions of credit secured by liens on interest in real estate, subject to such terms, conditions, and limitations as may be prescribed by the Comptroller of the Currency by order, rule, or regulation.''[9] The purpose of the 1982 amendment was ''to provide national banks with the ability to engage in more creative and flexible financing, and to become stronger participants in the home financing market.''[10] In 1991, Congress removed the term ''rule'' from this phrase[11] and enacted an additional requirement, codified at 12 U.S.C. 1828(o), that national banks (and other insured depository institutions) conduct real estate lending pursuant to ''uniform standards'' adopted at the Federal level by regulation of the OCC and the other Federal banking agencies.[12] Thus, the history of national banks' real estate lending activities under section 371 is one of extensive Congressional involvement gradually giving way to a

[3] 517 U.S. 25, 30 (1996).

[4] Subsequent *Federal* legislation may provide, however, that national banks shall conduct certain activities subject to state law standards. For example, national banks conduct insurance sales, solicitation, and cross-marketing activities subject to certain types of state restrictions expressly set out in the Gramm-Leach-Bliley Act. *See* 15 U.S.C. 6701(d)(2)(B). There is no similar Federal legislation subjecting national banks' real estate lending activities to state law standards.

[5] *Barnett,* 517 U.S. at 32.

[6] *Id.* at 34.

[7] Federal Reserve Act, ch. 6, § 24, 38 Stat. 251, 273 (1913).

[8] S. Rep. No. 97–536, at 27 (1982).

[9] Garn-St Germain Depository Institutions Act of 1982, Pub. L. 97–320, § 403, 96 Stat. 1469, 1510–11 (1982).

[10] S. Rep. No. 97–536, at 27 (1982).

[11] This language was changed without explanation.

[12] Section 304 of the Federal Deposit Insurance Corporation Improvement Act, 12 U.S.C. 1828(o). These standards governing national banks' real estate lending are set forth in subpart D of part 34.

streamlined approach in which Congress has delegated broad authority to the Comptroller.[13] It may therefore be argued that section 371 evidences an intent for the OCC to occupy the field of regulation of national banks' real estate lending except, of course, where Congress in other legislation has made them subject to additional requirements, *e.g.* the Truth in Lending Act.[14]

The OCC has implemented section 371 in regulations set forth at 12 CFR part 34. Subpart A of part 34, by its terms, applies to both national banks and their operating subsidiaries.[15] Twelve CFR 34.3 establishes the general rule that a national bank and its operating subsidiaries may engage in real estate lending subject only to the ''terms, conditions, and limitations prescribed by the Comptroller of the Currency by regulation or order.'' Twelve CFR 34.4(a) expressly provides that five types of state law limitations are not applicable to real estate loans made by national banks and their operating subsidiaries:

(a) *Specific preemption.* A national bank may make real estate loans under 12 U.S.C. 371 and § 34.3 without regard to State law limitations concerning:

(1) The amount of a loan in relation to the appraised value of the real estate;

(2) The schedule for the repayment of principal and interest;

(3) The term to maturity of the loan;

(4) The aggregate amount of funds that may be loaned upon the security of real estate; and

(5) The covenants and restrictions that must be contained in a lease to qualify the leasehold as acceptable security for a real estate loan.

It would appear that a number of GFLA provisions fall within the scope of § 34.4(a). For example, National City argues that a number of GFLA prohibitions, including those on balloon payments, negative amortization, advance payments from the loan proceeds and acceleration at the creditor's or servicer's discretion, are state law limitations concerning the ''schedule for the repayment of principal and interest'' and are therefore preempted by § 34.4(a)(2).

Twelve CFR 34.4(b) states:

The OCC will apply recognized principles of Federal preemption in considering whether State laws apply to other aspects of real estate lending by national banks.[16]

It may be argued that the structure of § 371 and § 34.3, together with the express preemption delineated in § 34.4(a), evidence a presumption that state law does not apply to the real estate lending activities of national banks and their operating subsidiaries unless the OCC determines under § 34.4(b) that a particular state law is not preempted. In other words, in ''considering whether state laws apply'' for purposes of issuing an order under section 371, the OCC could either issue an order confirming that the law is not applicable or providing that it will be applicable after applying the ''recognized principles of preemption'' referred to in § 34.4(b). Thus, in effect, National City argues that section 371 authorizes the OCC to ''occupy the field'' of real estate lending regulation for national banks, and that, through its regulations, including § 34.4(a) and (b), the OCC has done so.

Thus, in order to implement § 34.4(b) to determine whether any of the GFLA provisions not otherwise preempted under § 34.4(a) apply to National City, the OCC examines whether the state law ''stands as an obstacle to the accomplishment and execution of the full purposes and objectives of Congress.'' [17] In the present context, the OCC must examine the effect that the state law provisions have on a national bank's exercise of the federally authorized power to engage in real estate lending granted by Federal statutes, including 12 U.S.C. 371.[18] As set out in detail in its request, National City asserts that various GFLA provisions place impermissible limits on the exercise of national banks' real estate lending powers under 12 U.S.C. 371 and place impermissible limits on the exercise of national banks' authority to lend money generally under 12 U.S.C. 24(Seventh) and to charge fees for lending products or services.[19]

National City accordingly requests the OCC to issue a determination or an order under 12 U.S.C. 24(Seventh) and 12 U.S.C. 371 that the identified provisions of the GFLA do not apply to National City.

Request for Comments

The OCC solicits comment on the issues raised by the National City request.

Dated: February 13, 2003.

John D. Hawke, Jr.,

Comptroller of the Currency.

Appendix—National City's Request

February 11, 2003.

Julie L. Williams, *First Senior Deputy Comptroller of the Currency and Chief Counsel, Office of the Comptroller of the Currency, 250 E. Street, SW., Washington, DC 20219.*

Re: Request for Preemption Determination or Order.

Dear Ms. Williams: On behalf of National City Bank, National City Bank of Indiana and its operating subsidiaries First Franklin Financial Corporation and National City Mortgage Co. we hereby request the Office of the Comptroller of the Currency (''OCC'') to issue a preemption determination or Order under 12 U.S.C. 371 that the Georgia Fair Lending Act (''GFLA'') is preempted by federal law and regulations, specifically 12 U.S.C. 24 (Seventh), 371 and 484 and 12 CFR 34.1(b), 34.3, 34.4, 7.4002 and 7.4006 as it relates to a national bank and its operating subsidiaries in the exercise of their federally granted real estate lending powers.

I. Background

A. The Requesting Parties

National City Bank and National City Bank of Indiana both are national banks, chartered, regulated, and supervised by the OCC. National City Mortgage Co. and First Franklin Financial Corporation are wholly owned operating subsidiaries of National City Bank of Indiana and are similarly regulated and supervised by the OCC.

National City Bank originates in its own name and funds home equity loans and lines of credit on a nationwide basis. National City Mortgage Co. originates in its own name and funds first and second mortgage loans throughout the United States for the purpose of financing and refinancing the acquisition and construction of real property consisting of one to four family residential dwellings. First Franklin Financial Corporation originates in its own name and funds first and second mortgage loans that enable borrowers to acquire and refinance one to four family residential real property. In this request, National City Bank, National City Mortgage Co. and First Franklin Financial Corporation are collectively referred to as ''National City.'' National City receives loan applications from third party mortgage brokers, and those mortgage brokers perform many services resulting in the origination of the loans and lines of credit by National City in its own name.

B. The Georgia Fair Lending Act

The GFLA became effective on October 1, 2002. In the enactment of GFLA the Georgia Legislature was attempting to address abuses

[13] We note that in *Rice* v. *Santa Fe Elevator Corp.,* 331 U.S. 218 (1946), the Supreme Court considered a statute that had been similarly revised to delegate exclusive authority under it to the Secretary of Agriculture. Even though the statutory revision in question in *Rice* authorized the Secretary ''to cooperate with State officials,'' the Supreme Court found the revision evidence that Congress acted ''so unequivocally as to make clear that it intends no regulation except its own.'' *Id.* at 236.

[14] 15 U.S.C. 1601 *et seq.*

[15] *See* 12 CFR 34.1(b).

[16] *See* 12 CFR 24.4(b).

[17] *Barnett,* 517 U.S. at 31, *quoting Hines v. Davidowitz,* 312 U.S. 52, 67 (1941).

[18] As explained below, National City also argues that a number of GFLA provisions impair the bank's ability to exercise its general lending authority under 12 U.S.C. 24 (Seventh).

[19] The OCC's regulation at 12 CFR 7.4002 reaffirms that ability to charge a fee for a bank's services.

it perceived in the marketplace that disadvantaged persons who may have impaired credit or were unfamiliar with real estate lending procedures and terms. There may be a legitimate state purpose for regulation of lending practices which are otherwise unsupervised. However, that purpose has no applicability to national banks and their operating subsidiaries, which are subject to comprehensive regulation and supervision by the OCC as required by federal law.

GFLA restricts national banks and their operating subsidiaries' ability to originate mortgage loans in the state of Georgia, set interest rates, fees and credit terms, establish disclosures and utilize the services of third party mortgage brokers in the origination process. GFLA applies to all consumer-purpose loans and lines of credit secured by borrower-occupied one to four family residential property within the conforming loan limit set by FNMA for a single-family dwelling except reverse mortgages, bridge loans and loans which are also secured by personal property (''Home Loan''). Certain of GFLA's restrictions apply to all Home Loans. Other limitations apply to one or both of the two sub-categories of Home Loans created by GFLA as it was originally enacted: Covered Home Loans and High Cost Home Loans. Whether a Home Loan fits into these categories depends on the loan's interest rate and fees and charges. The fees and charges which cause a Home Loan to be categorized as a Covered Home Loan or High Cost Home Loan include the fees paid to a third party mortgage broker.

GFLA establishes specific and burdensome limitations on mortgage-secured loans and lines of credit that significantly interfere with National City's ability to make these loans. All Home Loans are subject to restrictions on the terms of credit and certain loan related fees, including the prohibition of financing of credit insurance, debt cancellation and suspension coverage, and limiting late charges and prohibiting payoff and release fees. If the loan or line of credit is a Covered Home Loan which refinances a Home Loan which was closed within the previous five years, National City is restricted from originating it unless the refinanced transaction meets standards established by GFLA. If the loan or line of credit is a High Cost Home Loan, GFLA does not permit National City to originate it unless the borrower has received advance counseling with respect to the advisability of the transaction from a third party nonprofit organization. GFLA regulates National City's ability to determine the borrower's ability to repay the High Cost Home Loan. GFLA restricts, and in some cases prohibits, the imposition by National City of certain credit terms or servicing fees on High Cost Home Loans, including: prepayment penalties, balloon payments, advance loan payments, acceleration in the lender's discretion, negative amortization, post-default interest and fees to modify, renew, amend or extend the loan or defer a payment. Any High Cost Home Loan must contain a specific disclosure that it is subject to special rules, including purchaser and assignee liability, under GFLA. Finally, GFLA imposes pre-foreclosure requirements.

GFLA currently creates strict assignee liability for all subsequent holders of a home loan. GFLA provides a private right of action for borrowers against lenders, mortgage brokers, assignees and servicers for injunctive and declaratory relief as well as actual damages, including incidental and consequential damages, statutory damages equal to forfeiture of all interest or twice the interest paid, punitive damages, attorneys' fees and costs. In addition, the Georgia Attorney General, district attorneys, the Commissioner of Banking and Finance and, with respect to the insurance provisions, the Commissioner of Insurance has the jurisdiction to enforce GFLA through their general state regulatory powers and civil process. Criminal penalties are also available.

The uncapped investor liability caused Standard & Poors, Moody's Investor Services and Fitch Ratings to cease rating any security that includes GFLA-governed loans. As of February 4, 2003 Fitch Ratings declined to rate Georgia Home Loans in RMBS pools. Fitch ratings also announced that it was considering the impact of further state and local predatory lending legislation on its ability to rate transactions. As a result, the GFLA impairs National City's ability to securitize or sell their loans on the secondary market.

In light of the recent pronouncements by the securities rating agencies, the Georgia Legislature is considering amendments to GFLA which could limit or eliminate liability for assignees and purchasers, remove the category of Covered Loans and make other substantive changes to the law. These proposed changes, if enacted, will reduce the number of loans categorized as High Cost Home Loans and might provide limited safe harbors for refinancings. However, the proposed amendments would not affect the restrictions on loan fees and terms for Home Loans and High Cost Home Loans and the preconditions for originating a High Cost Home Loan. One proposal would also restrict the refinancing of any Home Loan originated in the previous five years unless the refinancing meets GFLA's standards. Therefore, the proposed amendments do not obviate National City or any other national banking organization's need for a preemption determination.

C. Impact of GFLA on National City's Real Estate Lending in Georgia

The effect of GFLA is to limit National City's ability to originate and to establish the terms of credit on residential real estate loans and lines of credit, including loans or lines of credit submitted by a third party mortgage broker. GFLA has significantly impaired National City's ability to originate residential real estate loans in Georgia.

In addition to preventing National City from exercising its fundamental powers to engage in residential real estate transactions and to incorporate credit terms that National City feels may be necessary to lend in a safe and sound manner, GFLA has also adversely affected the investor market for Georgia loans. The restrictions imposed by GFLA have lead the Government Sponsored Enterprises (''GSE's'') to limit the loans they will purchase from National City and other originators, and Standard and Poors, Fitch Ratings and Moody's Investor Service have publicly stated they will not allow a GFLA governed loan in a rated structured financial transaction. This is another example of how the GFLA adversely affects National City's ability to sell or securitize loans.[20]

II. Reasons Supporting the Requested Preemption of GFLA

A. GFLA Is Preempted by Paramount Federal Law

National banks and their operating subsidiaries have broad authority to originate and establish the terms and conditions of mortgage loans, subject only to the paramount regulations and orders established by the Office of the Comptroller of the Currency (''OCC'').

Federal law may preempt state law (1) where Congress has expressly preempted state law, (2) where Congress has occupied the field the state seeks to regulate, and (3) where state law actually conflicts with federal law. *Schneidewind* v. *ANR Pipeline Co.,* 485 U.S. 293, 299–300 (1988). In applying the test put forth by the United States Supreme Court in *Barnett Bank, N.A.* v. *Nelson,* 517 U.S. 25 (1996), 134 L. Ed.2d 237 to the facts here it is clear that Congress provided national banks with a broad grant of powers under 12 U.S.C. 24 (Seventh) and a specifically broad grant of powers for real estate lending pursuant to 12 U.S.C. 371. This grant of power to permit real estate lending is the exact activity which GFLA restricts. The State's prohibitions under GFLA ''stand as an obstacle to the accomplishment'' of one of the federal statute's purposes, *Hines* v. *Davidowitz,* 312 U.S. 52, 67, 85 L. Ed. 581, 61 S. Ct. 399 (1941).

Twelve U.S.C. § 371 occupies the field of mortgage lending subject only to such regulations and orders as are adopted by the OCC. The Supreme Court has recognized that state law generally should not limit powers granted by Congress—

In using the word ''powers,'' the statute chooses a legal concept that, in the context of national bank legislation, has a history. That history is one of interpreting grants of both enumerated and incidental ''powers'' to national banks as grants of authority not normally limited by, but rather ordinarily preempting, contrary state law. Barnet Bank v. Nelson, 517 U.S. 25 at 32 (1996). See also Bank One v. Guttau, 190 F.3d 844, 847 (8th Cir. 1999).

The Supreme Court has held that federal law preempts not only state laws that purport to prohibit a national bank from engaging in an activity permissible under federal law but also state laws that condition the exercise by a national bank of a federally authorized activity.

[W]here Congress has not expressly conditioned the grant of ''power'' upon a grant of state permission, the Court has ordinarily found that no such condition applies. In Franklin Nat. Bank, the Court

[20] We note that other states and localities have passed similar restrictions that also adversely affect National City's real estate lending.

made this point explicit. It held that Congress did not intend to subject national banks' power to local restrictions because the federal power-granting statute there in question contained 'no indication that Congress [so] intended* * * as it has done by express language in several other instances.' Barnett, 517 U.S. at 34 (citations omitted; emphasis in original).

As was the case in *Barnett,* Congress placed no restrictions in 12 U.S.C. 371 on the ability to conduct real estate lending activities other than by rules and/or regulations as may be promulgated by the OCC. The OCC has done so by promulgating 12 CFR 34, which by its terms reserves no right to the states to regulate in the area of real estate lending by a national bank or its operating subsidiary. National City is of the opinion as supported by the Supreme Court's decision in *Barnett* that the federal statute governing the power of a national bank to lend creates a scheme of federal law and regulation so pervasive as to make reasonable the inference that Congress left no room for the States to supplement it.

Therefore, a conflict between GFLA and federal law need not be complete in order for federal law to have preemptive effect. If, as here, the state law (GFLA) places limits on an unrestricted grant of authority under federal law, the state law (GFLA) is preempted.

B. The Preemption Analysis Applicable to National Banks Applies With Equal Force to National Bank Operating Subsidiaries

In section 121 of the Gramm Leach Bliley Act (''GLBA''), Congress expressly acknowledged that national banks may own subsidiaries that engage ''solely in activities that national banks are permitted to engage in directly and are conducted subject to the same terms and conditions that govern the conduct of such activities by national banks.'' 12 U.S.C. 24 a(g)(3).

Consistent with section 121, the OCC regulations state that ''[a]n operating subsidiary conducts activities authorized under [12 CFR 5.34] pursuant to the same authorization, terms and conditions that apply to the conduct of such activities by its parent national bank. 12 CFR 5.34(e)(3); See also 12 CFR 7.4006.

National City's operating subsidiaries are conducting mortgage lending and servicing activities as permitted for a national bank pursuant to 12 U.S.C. 24(Seventh), 12 U.S.C. 371, and 12 CFR 5.34(e)(5)(v). As such, they are subject to federal law and States do not have the right to limit the powers over a national bank or its operating subsidiaries in the conduct of these real estate lending activities, except where such authority is specifically granted by federal law, which is not the case here. Like the Bank, the operating subsidiaries are examined on a continuous basis by OCC examiners specifically assigned to, and in most cases physically present at, the facilities of the Banks and their operating subsidiaries.

C. National Bank Real Estate Powers and Part 34 of the Comptroller's Regulations

The National Bank Act's underlying objective is to create a uniformly regulated national banking system. The National Bank Act is a comprehensive statute which governs not only the internal workings of national banks, but also their powers, and virtually all aspects of their regulation is the exclusive responsibility of the OCC. See OCC Unpublished Interpretive Letter dated September 5, 1989 (holding that a Wisconsin statute imposing notification filing and fee requirements on lenders making certain consumer loans was preempted for national banks); OCC Advisory Letter 2002–9. In section 24 (Seventh) of the National Bank Act, 12 U.S.C. 24(Seventh) Congress granted national banks the power to exercise, ''by its board of directors or duly authorized officers or agents, * * * all such incidental powers as shall be necessary to carry out the business of banking; by discounting and negotiating promissory notes, drafts, bills of exchange, and other evidences of debt; * * * [and] by loaning money on personal security;* * *'' Congress further specifically authorized national banks to engage in real estate lending beginning with the Act of September 7, 1916. From 1916 to 1982, in the statutory predecessors to the present 12 U.S.C. 371, Congress gradually broadened the scope of national bank authority to make real estate loans, culminating in the enactment of the Garn-St. Germain Depository Institutions Act of 1982 (Garn-St. Germain''). Prior to Garn-St. Germain, 12 U.S.C. 371 contained specific provisions establishing maximum loan to value ratios, amortization requirements, maximum loan maturity and aggregate limits on the amount of real estate loans a national bank could make or purchase. In Garn-St. Germain, Congress removed these limitations entirely, and gave national banks unlimited power to engage in real estate lending subject only to the regulations and orders established by the OCC. Thus, the history of national bank power to engage in real estate lending demonstrates Congressional intent to occupy the field, and to replace Congressional control over the terms of national banks' real estate lending with a complete delegation of control to the OCC as the ultimate arbiter of the national bank's exercise of those powers. Further, section 371 is an illustration of the familiar maxim of statutory construction: *expressio unius est exclusio alterius;* in that the specificity of the grant of authority to engage in real estate lending leaves no room for state law or regulation.

Currently, section 371 provides as follows:

Authorization to make real estate loans; orders, rules and regulations of Comptroller of the Currency. Any national banking association may make, arrange, purchase or sell loans or extension of credit secured by liens on interests in real estate, subject to section 18(o) of the Federal Deposit Insurance Act [12 USCS 1828(o)] and such restrictions and requirements as the Comptroller of the Currency may prescribe by regulation or order.[21]

The OCC fully implemented the authority granted by Garn-St. Germain in 1983 by amending or removing the interpretive rulings regarding real estate lending that had their origins in earlier versions of 12 U.S.C. 371 and promulgated Part 34, which comprehensively defines real estate lending by national banks. Part 34 recognizes that the forms and terms of national bank lending must be determined by the management of national banks themselves, to enable the banks to have the necessary flexibility to respond to market conditions. OCC regulatory authority insures that national banks do so prudently and in a safe and sound manner. Part 34 also clarifies the scope of federal preemption of state laws that could impact real estate lending activities by national banks.

The pertinent regulations provide:

§ 34.3 General rule

A national bank may make, arrange, purchase or sell loans or extensions of credit, or interests therein, that are secured by liens on, or interests in, real estate, subject to terms, conditions, and limitations prescribed by the Comptroller of the Currency by regulation or order.

§ 34.4 Applicability of State law

(a) Specific preemption. National banks may make real estate loans under 12 U.S.C. 371 and § 34.3 without regard to state law limitations concerning:

(1) The amount of a loan in relation to the appraisal value of the real estate;

(2) The schedule for the repayment of principal and interest;

(3) The term to maturity of the loan;

(4) The aggregate amount of funds that may be loaned upon the security of real estate; and

(5) The covenants and restrictions that must be contained in a lease to qualify the leasehold as acceptable security for a real estate loan.

(b) General standards. The OCC will apply recognized principles of Federal preemption in considering whether State laws apply to other real estate lending activities of national banks.

The provisions of GFLA which fall within the scope of 12 CFR 34.4(a)'s specific state law preemptions fall without need for further analysis. Other provisions of GFLA can be analyzed under 12 CFR 34.4(b). OCC regulations specifically provide that the provisions of 12 CFR 34.4 are applicable to both national banks and their operating subsidiaries. See 12 CFR 34.1(b).

1. Provisions of GFLA Which Are Preempted Under 12 CFR 34.4(a)

Taken together, the provisions of 12 CFR 34.4(a)(1)–(4) which remove any limits on loan to value ratios, amortization requirements, maturity requirements and aggregate loan limits preempt state laws

[21] 12 U.S.C. § 1828(o) authorized the OCC to establish uniform regulations for real estate secured extensions of credit. In adopting such regulations, the OCC is required to consider: the risk posed to the deposit insurance funds by real estate lending; the need for safe and sound operation of the insured institutions; and the availability of credit. The OCC is authorized to permit differing standards among the types of real estate-secured loans, as warranted by federal law, the risk to the federal deposit insurance fund, and based on considerations of institutional safety and soundness. Thus, Congress has instructed the OCC to exercise its supervisory authority over real estate lending in support of mandates found in federal law alone.

which impair a national bank or its operating subsidiary's ability to make *any* real estate-secured loan. Three aspects of GFLA run afoul of this preemption; the restrictions on a national bank's ability to refinance certain Home Loans made in the previous five years; the prohibition on making a High Cost Home Loan unless the borrower has first received counseling from a third party regarding the advisability of the transaction; and the prohibition on making a High Cost Home Loan unless the borrower meets GFLA's standards as to his or her ability to repay the loan. These restrictions not only impair National City's ability to determine the aggregate amount of loans it will originate in Georgia, they also impact loan to value ratios, amortization requirements and determination of loan maturity.

GFLA's prohibition of balloon payments, negative amortization and advance payments from the loan proceeds are specifically preempted under 12 CFR 34.4(a)(2), and 12 CFR 34.4(a)(3) preempts GFLA's prohibition of a loan term that prevents the lender from accelerating a High Cost Home Loan in the exercise of its discretion. See OCC Unpublished Interpretive Letter dated December 8, 1983 (preempting a Massachusetts law restricting balloon and demand payment terms) and OCC Unpublished Interpretive Letter dated May 9, 1988 (national banks are not required to amortize real estate loans and contrary state laws are preempted). The OCC has also held that all state law disclosure requirements for real estate secured loans are preempted. See OCC Unpublished Interpretive Letter dated March 30, 1988.

2. Provisions of GFLA Which Are Preempted Under 12 CFR 34.4(b)

The five areas delineated in 12 CFR 34.4(a) are not the exclusive areas where federal law preempts state laws affecting national bank real estate lending activities. 61 FR 11294 (March 20, 1996). Those provisions of the GFLA that are not already preempted under 12 CFR 34.4(a) are preempted under 12 CFR 34.4(b) *either* because they are inconsistent with the comprehensive authority granted to the OCC under section 371 to regulate the real estate lending activities of national banks *or* applying the conflict analysis in *Barnett.* With regard to the latter analysis, the provisions of GFLA which prohibit the financing of credit insurance, debt cancellation or suspension coverage, limit late payment charges and prohibit payoff and release fees for Home Loans and restrict or prohibit prepayment penalties, post-default interest and fees for modification, extension or deferral of payments for High Cost Home Loans would seem to ''stand as an obstacle to the accomplishment'' of one of the federal statute's purpose—that being the authorization to make real estate loans subject only to such restrictions and regulations as the OCC may prescribe. See *Barnett* 517 U.S. 25, at 31; and 12 U.S.C. § 1828(o). These provisions are an impermissible attempt by the state of Georgia to condition the exercise of national bank lending powers which are authorized by federal law. *Bank of America, National Trust & Sav. Asso.* v. *Lima,* 103 F. Supp. 916 (D. Mass. 1952). GFLA's compliance provisions include the potential threat of litigation including uncapped damages and the application of the foreclosure provisions. These aspects of GFLA not only have more than an incidental chilling affect on the operations of national banks and their operating subsidiaries, but the compliance scheme, which includes enforcement by state regulators, directly conflicts with the exclusive grant of visitorial power to the OCC in 12 U.S.C. 484. See OCC Advisory Letter 2002–9.

D. Preemption of GFLA's Restrictions on the Use of Mortgage Brokers in the Loan Origination Process

12 U.S.C. 24 (Seventh) and 12 CFR 7.1004 permit a national bank to use third party services in the organization process; this is restricted by the limitations contained in GFLA as a whole and through its impact on broker compensation.

Section 24(Seventh) specifically authorizes national banks to make loans. Section 24(Seventh) also authorizes national banks to engage in the more general ''business of banking'' and activities incidental thereto. The Supreme Court has expressly held that the ''business of banking'' is not limited to the enumerated powers in section 24(Seventh) and that the Comptroller therefore has discretion to authorize activities beyond those specifically enumerated. See *NationsBank of North Carolina, N.A.* v. *Variable Annuity Life Ins. Corp.,* 513 U.S. 251, 258, n.2 (1995). An activity will be deemed ''incidental'' to the business of banking if it is ''convenient or useful in connection with the performance of'' a power authorized under federal law. *Arnold Tours, Inc.* v. *Camp,* 472 F.2d 427, 432 (1st Cir. 1972).

The authority of national banks under section 24(Seventh) permits a national bank to use the services of agents and other third parties in connection with a bank's lending business. Federal banking regulations specifically provide that a national bank may ''use the services of, and compensate persons not employed by, the bank for originating loans''. 12 CFR 7.1004(a). Likewise, the regulations permit national banks to utilize the services of third parties to disburse loan proceeds. 12 CFR 7.1003(b). These agents may undertake these activities at sites that are neither the main office nor a branch office of the bank provided the requirements of those regulations are satisfied. 12 CFR 7.1003(b), 7.1004(b). This authority applies equally to an operating subsidiary of a national bank. 12 CFR 7.1004(b).

Therefore, the provisions of GFLA which have the effect of denying national banks and their operating subsidiaries from being able to use third party mortgage brokers and compensating them for the services they provide as permitted by federal law must be preempted.

For the foregoing reasons, National City requests that the OCC issue a determination, and/or an order pursuant to 12 U.S.C. 371, that GFLA is preempted as it applies to a national bank and its operating subsidiaries, and further restate the long held position of the OCC with respect to the permitted use of third parties to facilitate the making of real estate loans in Georgia and elsewhere.

Very truly yours,

Thomas A. Plant.

TAP/gs

[FR Doc. 03–4507 Filed 2–25–03; 8:45 am]

BILLING CODE 4813–33–P

DEPARTMENT OF THE TREASURY

Financial Management Service

Privacy Act of 1974; System of Records

AGENCY: Financial Management Service, Treasury.

ACTION: Notice of alterations to three Department of the Treasury, Financial Management Service (FMS), Privacy Act Systems of Records.

SUMMARY: In accordance with the Privacy Act of 1974 (5 U.S.C. 552a), the Department of the Treasury, Financial Management Service (FMS), gives notice of proposed alterations to three of its existing systems of records, as follows: ''Treasury/FMS .002—Payment Issue Records for Regular Recurring Benefit Payments,'' ''Treasury/FMS .014—Debt Collection Operations System,'' and Treasury/FMS .016—Payment Records for Other Than Regular Recurring Benefit Payments.''

DATES: Comments must be received no later than March 28, 2003. The proposed systems of records will be effective April 7, 2003 unless FMS receives comments which would result in a contrary determination.

ADDRESSES: Comments must be submitted to the Debt Management Services, Financial Management Service, 401 14th Street, SW., Room 448B, Washington, DC 20227, or by electronic mail to *gerald.isenberg@fms.treas.gov*. Comments received will be available for inspection at the same address between the hours of 9 a.m. and 4 p.m. Monday through Friday.

FOR FURTHER INFORMATION CONTACT: Gerry Isenberg, Financial Management Service, Debt Management Services, (202) 874–7131.

SUPPLEMENTARY INFORMATION: The Financial Management Service (FMS) is the money manager for the Federal Government. As such, FMS disburses over 900 million payments totaling more than $1.2 trillion in social security and veterans' benefits, income tax refunds, and other federal payments. In addition, FMS operates several programs to facilitate collection or resolution of delinquent debts owed to the Federal Government and states, including past due support being enforced by states. In the operation of its

payment and debt collection programs, FMS maintains records on individuals who receive payments from the Federal Government, as well as individuals who owe delinquent debts to the Federal Government and states. Records on individuals who receive Federal payments are maintained in FMS's ''Payment Issue Records for Regular Recurring Benefit Payments,'' and ''Payment Records for Other Than Regular Recurring Benefit Payments.'' Records on individuals who owe delinquent debts are maintained in its ''Debt Collection Operations System'' system of records. The systems of records were last published in the **Federal Register** in their entirety on August 22, 2001, beginning in 66 FR 44204.

In keeping with the Government's policy to rely on commercial sources to supply the products and services the Government needs, FMS sometimes retains the services of contractors to perform certain routine functions related to payment and debt collection processing. Disclosures of information maintained in FMS'' systems of records may be required in order for the contractor to perform the services for which it has been hired. If disclosure is necessary, the contractor to which disclosure is made will be subject to the same limitations applicable to FMS officers and employees under the Privacy Act. This means that the contractor is required to safeguard Privacy Act information to prevent unauthorized use or disclosure of any Privacy Act records. FMS is altering the referenced systems of records to allow disclosure of information from such systems to a private contractor to the extent necessary for the contractor to accomplish an FMS function related to payment processing and/or debt collection.

The report required by 5 U.S.C. 552a(r) of the Privacy Act, has been submitted to the Committee on Government Reform and Oversight of the House of Representatives, the Committee on Governmental Affairs of the Senate, and the Office of Management and Budget, pursuant to Appendix I to OMB Circular A–130, Federal Agency Responsibilities for Maintaining Records About Individuals, dated November 30, 2000.

For the reasons set forth above, FMS proposes to alter its systems of records as follows:

TREASURY/FMS .002

SYSTEM NAME:

Payment Issue Records for Regular Recurring Benefit Payments—Treasury/Financial Management Service.

Description of change: Remove current entry and add the following to read as follows:

SYSTEM LOCATION:

''The Financial Management Service, U.S. Department of the Treasury, Washington, DC 20227 and Hyattsville, MD 20782. Records maintained at Financial Centers in five regions: Austin, TX; Birmingham, AL; Kansas City, MO; Philadelphia, PA; and San Francisco, CA.''

* * * * *

ROUTINE USES OF RECORDS MAINTAINED IN THE SYSTEM, INCLUDING CATEGORIES OF USERS AND PURPOSES OF SUCH USES:

* * * * *

Description of change: The period ''.'' at the end of routine use (13) is replaced with a semicolon '';'', and the following routine use is added at the end thereof:

''(14) Disclose information to a contractor of the Financial Management Service for the purpose of performing routine payment processing services, subject to the same limitations applicable to FMS officers and employees under the Privacy Act.''

* * * * *

TREASURY/FMS .014

SYSTEM NAME:

Debt Collection Operations System-Treasury/Financial Management Service.

* * * * *

ROUTINE USES OF RECORDS MAINTAINED IN THE SYSTEM, INCLUDING CATEGORIES OF USERS AND PURPOSES OF SUCH USES:

* * * * *

Description of change: The period ''.'' at the end of routine use (8) paragraph c is replaced with a semicolon '';'', and the following language is added before the period ''.'':

(8) c. * * *

''including for the provision of routine debt collection services by an FMS contractor subject to the same limitations applicable to FMS officers and employees under the Privacy Act.''

* * * * *

TREASURY/FMS .015

SYSTEM NAME:

Payment Records for Other Than Regular Recurring Benefit Payments—Treasury/Financial Management Service.

Description of change: Remove current entry and add the following to read as follows:

SYSTEM LOCATION:

''The Financial Management Service, U.S. Department of the Treasury, Washington, DC 20227 and Hyattsville, MD 20782. Records maintained at Financial Centers in five regions: Austin, TX; Birmingham, AL; Kansas City, MO; Philadelphia, PA; and San Francisco, CA.''

* * * * *

ROUTINE USES OF RECORDS MAINTAINED IN THE SYSTEM, INCLUDING CATEGORIES OF USERS AND PURPOSES OF SUCH USES:

* * * * *

Description of change: The period ''.'' at the end of routine use (13) is replaced with a semicolon '';'', and the following routine use is added at the end thereof:

''(14) Disclose information to a contractor of the Financial Management Service for the purpose of performing routine payment processing services, subject to the same limitations applicable to FMS officers and employees under the Privacy Act.''

* * * * *

Dated: February 11, 2003.

W. Earl Wright, Jr.,

Chief Management and Administrative Program Officer.

[FR Doc. 03–4457 Filed 2–25–03; 8:45 am]

BILLING CODE 4810–35–P

DEPARTMENT OF THE TREASURY

Internal Revenue Service

Proposed Collection; Comment Request for Form 4255

AGENCY: Internal Revenue Service (IRS), Treasury.

ACTION: Notice and request for comments.

SUMMARY: The Department of the Treasury, as part of its continuing effort to reduce paperwork and respondent burden, invites the general public and other Federal agencies to take this opportunity to comment on proposed and/or continuing information collections, as required by the Paperwork Reduction Act of 1995, Public Law 104–13(44 U.S.C. 3506(c)(2)(A)). Currently, the IRS is soliciting comments concerning Form 4255, Recapture of Investment Credit.

DATES: Written comments should be received on or before April 28, 2003 to be assured of consideration.

ADDRESSES: Direct all written comments to Glenn Kirkland, Internal Revenue

Service, room 6411, 1111 Constitution Avenue NW., Washington, DC 20224.

FOR FURTHER INFORMATION CONTACT: Requests for additional information or copies of the form and instructions should be directed to Larnice Mack, at (202) 622–3179, or *Larnice.Mack@irs.gov,* or Internal Revenue Service, room 6407, 1111 Constitution Avenue NW., Washington, DC 20224.

SUPPLEMENTARY INFORMATION:

Title: Recapture of Investment Credit.

OMB Number: 1545–0166.

Form Number: 4255.

Abstract: Internal Revenue Code section 50(a) requires that a taxpayer's income tax be increased by the investment credit recapture tax if the taxpayer disposes of investment credit property before the close of the recapture period used in figuring the original investment credit. Form 4255 provides for the computation of the recapture tax.

Current Actions: There are no changes being made to the form at this time.

Type of Review: Extension of a currently approved collection.

Affected Public: Business or other for-profit organizations, individuals, and farms.

Estimated Number of Respondents: 20,000.

Estimated Time Per Respondent: 9 hrs. 49 min.

Estimated Total Annual Burden Hours: 196,400.

The following paragraph applies to all of the collections of information covered by this notice:

An agency may not conduct or sponsor, and a person is not required to respond to, a collection of information unless the collection of information displays a valid OMB control number. Books or records relating to a collection of information must be retained as long as their contents may become material in the administration of any internal revenue law. Generally, tax returns and tax return information are confidential, as required by 26 U.S.C. 6103.

Request for Comments

Comments submitted in response to this notice will be summarized and/or included in the request for OMB approval. All comments will become a matter of public record. Comments are invited on: (a) Whether the collection of information is necessary for the proper performance of the functions of the agency, including whether the information shall have practical utility; (b) the accuracy of the agency's estimate of the burden of the collection of information; (c) ways to enhance the quality, utility, and clarity of the information to be collected; (d) ways to minimize the burden of the collection of information on respondents, including through the use of automated collection techniques or other forms of information technology; and (e) estimates of capital or start-up costs and costs of operation, maintenance, and purchase of services to provide information.

Approved: February 19, 2003.

Glenn Kirkland,

IRS Reports Clearance Officer.

[FR Doc. 03–4547 Filed 2–25–03; 8:45 am]

BILLING CODE 4830–01–P

DEPARTMENT OF THE TREASURY

Internal Revenue Service

Open Meeting of the Area 6 Taxpayer Advocacy Panel (Including the States of Alaska, Arizona, Colorado, Hawaii, Idaho, Montana, Nevada, New Mexico, Oregon, Utah, Washington, and Wyoming)

AGENCY: Internal Revenue Service (IRS), Treasury.

ACTION: Notice.

SUMMARY: An open meeting of the Area 6 Committee of the Taxpayer Advocacy Panel will be conducted (via teleconference).

DATES: The meeting will be held Monday, March 17, 2003.

FOR FURTHER INFORMATION CONTACT: Anne Gruber at 1–888–912–1227, or 206–220–6096.

SUPPLEMENTARY INFORMATION: Notice is hereby given pursuant to section 10(a)(2) of the Federal Advisory Committee Act, 5 U.S.C. App. (1988) that an open meeting of the Area 6 Committee of the Taxpayer Advocacy Panel will be held Monday, March 17, 2003 from 2 p.m. PST to 4 p.m. PST via a telephone conference call. The public is invited to make oral comments. Individual comments will be limited to 5 minutes. If you would like to have the TAP consider an oral or written statement, please call 1–888–912–1227 or 206–220–6096, or write Anne Gruber, TAP Office, 915 2nd Ave, M/S W406, Seattle, WA 98174. Due to limited conference lines, notification of intent to participate in the telephone conference call meeting must be made with Anne Gruber. Ms. Gruber can be reached at 1–888–912–1227 or 206–220–6096.

The agenda will include the following: Various IRS issues.

Note: Last minute changes to the agenda are possible and could prevent effective advance notice.

Dated: February 19, 2003.

Deryle J. Temple,

Director, Taxpayer Advocacy Panel.

[FR Doc. 03–4414 Filed 2–25–03; 8:45 am]

BILLING CODE 4830–01–P

Corrections

Federal Register
Vol. 68, No. 38
Wednesday, February 26, 2003

This section of the FEDERAL REGISTER contains editorial corrections of previously published Presidential, Rule, Proposed Rule, and Notice documents. These corrections are prepared by the Office of the Federal Register. Agency prepared corrections are issued as signed documents and appear in the appropriate document categories elsewhere in the issue.

DEPARTMENT OF AGRICULTURE

Forest Service

Flagtail Fire Recovery Project, Malheur National Forest, Grant County, OR

Correction

In notice document 03–2836 beginning on page 6110 in the issue of Thursday, February 6, 2003, make the following correction:

On page 6110, in the second column, under the heading **Proposed Action**, in the first full paragraph, in the sixth line, after ''construction'', add the following text:

''of approximately 4 miles of temporary road, reconstruction of approximately 1/2 mile of existing road, and maitenance''.

[FR Doc. C3–2836 Filed 2–25–03; 8:45 am]

BILLING CODE 1505–01–D

DEPARTMENT OF JUSTICE

Immigration and Naturalization Service

[INS No. 2248–02]

Notice Designating Additional Ports-of-Entry for Departure of Aliens Who Are Subject to Special Registration

Correction

In notice document 03–4130 beginning on page 8047 in the issue of Wednesday, February 19, 2003, make the following correction:

On page 8047, in the third column, under the heading **Ports-of-Entry Designated for Final Registration and Departure by Nonimmigrant Aliens Subject to Special Registration** , in the last two lines, the list is corrected to read as set forth below.

Amistad Dam POE, Texas;
*Alcan POE, Alaska;
Anchorage International Airport, Alaska;
Atlanta Hartsfield International Airport, Georgia;
*Baltimore Washington International Airport, Maryland;
Bell Street Pier 66 (Seattle) Cruise Ship Terminal, Washington;
Bridge of the Americas POE, Texas;
Brownsville/Matamoros POE, Texas;
Buffalo Peace Bridge POE, New York;
Cape Vincent POE, New York;
Calexico POE, California;
*Calais POE, Maine;
* Cape Canaveral Seaport, Florida;
*Chicago Midway Airport, Illinois;
Chicago O'Hare International Airport, Illinois;
Champlain POE, New York;
*Charlotte International Airport, North Carolina;
Chateaugay POE, New York;
*Cleveland International Airport, Ohio;
Columbus POE, New Mexico;
Dallas/Fort Worth International Airport, Texas;
Del Rio International Bridge POE, Texas;
Denver International Airport, Colorado;
*Derby Line POE, Vermont;
*Detroit International (Ambassador) Bridge POE, Michigan;
Detroit Canada Tunnel, Michigan;
Detroit Metro Airport, Michigan;
Douglas POE, Arizona;
Eagle Pass POE, Texas;
*Eastport POE, Idaho;
Fort Covington POE, New York;
*Fort Duncan Bridge POE, Texas;
Galveston POE, Texas;
*Grand Portage POE, Minnesota;
Guam International Airport;
Heart Island POE, New York;
Hidalgo POE, Texas;
Highgate Springs POE, Vermont;
Honolulu International Airport, Hawaii;
Honolulu Seaport, Hawaii;
*Houlton POE, Maine;
Houston George Bush Intercontinental Airport, Texas;
Houston Seaport, Texas;
International Falls POE, Minnesota;
John F. Kennedy International Airport, New York;
*Ketchikan Seaport, Alaska;
*Kona International Airport and Seaport, Hawaii;
Gateway to the Americas Bridge POE, Laredo, Texas;
*Las Vegas (McCarran) International Airport, Nevada;
Lewiston Bridge POE, New York;
Logan International Airport, Massachusetts;
Long Beach Seaport, California;
Los Angeles International Airport, California;
*Madawaska POE, Maine;
Miami International Airport, Florida;
Miami Marine Unit, Florida;
Minneapolis/St. Paul International Airport, Minnesota;
Mooers POE, New York;
Niagara Falls, Rainbow Bridge, New York;
Newark International Airport, New Jersey;
Nogales POE, Arizona;
Ogdensburg POE, New York;
Orlando, Florida;
Oroville POE, Washington;
Otay Mesa POE, California;
Pacific Highway POE, Washington;
Pembina POE, North Dakota;
*Philadelphia International Airport, Pennsylvania;
*Phoenix (Sky Harbor) International Airport, Arizona;
Piegan POE, Montana;
*Pittsburgh International Airport, Pennsylvania;
*Point Roberts POE, Washington;
*Port Everglades Seaport, Florida;
Port Arthur POE, Texas;
*Port Huron POE, Michigan;
Portal POE, North Dakota;
*Portland International Airport, Oregon;
Progreso Bridge POE, Texas;
Raymond POE, Montana;
Roosville POE, Montana;
Rouses Point POE, New York;
San Antonio International Airport, Texas;
*San Diego (Lindbergh Field) International Airport, California;
San Diego Seaport, California;
San Francisco International Airport, California;
*San Juan International Airport and Seaport, Puerto Rico;
*Sanford International Airport, Florida;
*Sault St. Marie POE, Michigan;
Seattle Seaport, Washington;
Seaway International Bridge/Massena POE, New York;
Seattle Tacoma International Airport, Washington;
*St. Louis International Airport (Lambert Field), Missouri;
*St. Thomas Seaport, U.S. Virgin Islands;
Sweetgrass POE, Montana;
*Tampa International Airport and Seaport, Florida;

Thousand Islands POE, New York;

Trout River POE, New York

Washington Dulles International Airport, Virginia; and

Ysleta POE, Texas.

[FR Doc. C3–4130 Filed 2–25–03; 8:45 am]

BILLING CODE 1505–01–D

Federal Register

Wednesday,
February 26, 2003

Part II

Department of Education

Experimental and Innovative Training and Notice Inviting Applications for New Awards for Fiscal Year (FY) 2003; Notices

DEPARTMENT OF EDUCATION

Experimental and Innovative Training

AGENCY: Office of Special Education and Rehabilitative Services, Department of Education.

ACTION: Notice of final priority.

SUMMARY: The Assistant Secretary for the Office of Special Education and Rehabilitative Services announces a priority under the Experimental and Innovative Training program. The Assistant Secretary may use this priority for competitions in fiscal year (FY) 2003 and in later years.

We intend for the grantee to develop and disseminate rehabilitation training curriculum modules that can be incorporated into rehabilitation training programs. The purpose of the curriculum modules is to increase student contact with individuals with disabilities and to enhance student understanding of disability culture and counselor skills that support the empowerment of vocational rehabilitation (VR) customers with disabilities.

EFFECTIVE DATE: This priority is effective March 28, 2003.

FOR FURTHER INFORMATION CONTACT: Edward R. Smith, U.S. Department of Education, 400 Maryland Avenue, SW., room 3318, Switzer Building, Washington, DC 20202–2649. *Telephone:* (202) 205–0136 or via Internet: *Edward.Smith@ed.gov.*

If you use a telecommunications device for the deaf (TDD), you may call the TDD number at (202) 205–8133.

Individuals with disabilities may obtain this document in an alternative format (*e.g.*, Braille, large print, audiotape, or computer diskette) on request to the contact person listed under **FOR FURTHER INFORMATION CONTACT.**

SUPPLEMENTARY INFORMATION: The Experimental and Innovative Training program provides financial assistance—

(1) To develop new types of training programs for rehabilitation personnel and to demonstrate the effectiveness of those new types of training programs for rehabilitation personnel in providing rehabilitation services to individuals with disabilities; and

(2) To develop new and improved methods of training rehabilitation personnel so that there may be a more effective delivery of rehabilitation services by State and other rehabilitation agencies.

This priority will increase the knowledge and skills of rehabilitation personnel in disability culture and customer empowerment.

We published a notice of proposed priority for this program in the **Federal Register** on October 4, 2002 (67 FR 62308). The notice of proposed priority included a discussion of the significant issues and analysis used in the determination of this priority.

There are no differences between the notice of proposed priority and this notice of final priority.

Analysis of Comments and Changes

In response to our invitation in the notice of proposed priority, six parties submitted comments on the proposed priority. An analysis of the comments and of any changes in the priority since publication of the notice of proposed priority follows.

Generally, we do not address technical and other minor changes—and suggested changes the law does not authorize us to make under the applicable statutory authority.

Comment: One commenter recommended that applicants with experience in regional cooperative relationships with other agencies be given a preference when we award grants.

Discussion: We agree that experience in regional cooperation with other agencies is important, but we do not believe it should be required of all projects or be given greater emphasis than other models. The peer review process will determine the merits of each proposal.

Change: None.

Comment: One commenter recommended that the priority address people with disabilities from minority communities.

Discussion: Section 21(c) of the Rehabilitation Act of 1973, as amended, requires all projects funded under this priority to address the needs of ethnic and racial minorities with disabilities.

Change: None.

Comment: One commenter recommended that the priority allow for the training of both students and VR counselors.

Discussion: VR counselors as well as other students may enroll in rehabilitation training programs. This priority does not preclude the commenter's recommendation.

Change: None.

Comments: Two commenters recommended that the priority be amended to include the training of non-degree personnel and consumers with disabilities.

Discussion: The training of consumers is inconsistent with the statutory and regulatory authority of the Experimental and Innovative Training program. While this suggestion has merit for non-degree personnel, the focus of this priority is on the training of students who will become qualified rehabilitation counselors in the vocational rehabilitation system.

Change: None.

Comment: One commenter recommended that the curricula modules include an introduction to advocacy skills.

Discussion: This priority does not preclude the commenter's recommendation. The peer review process will determine the merits of such a proposal.

Change: None.

Comment: One commenter recommended that the priority require experiential activities that focus on the counseling needs of particular disability groups and specific areas within rehabilitation counseling, such as multicultural competency.

Discussion: While the comment has merit, we do not believe it should be required for all applicants. The peer review process will determine the merits of such a proposal.

Change: None.

Comment: One commenter recommended that applicants be restricted to entities that have demonstrated long-term successful collaborations with disability advocates and self-help groups.

Discussion: The program authority establishes eligible applicants for this program. We have no authority to further restrict applicant eligibility.

Change: None.

Note: This notice does *not* solicit applications. In any year in which we choose to use this priority, we invite applications through a notice in the **Federal Register**. When inviting applications we designate the priority as absolute, competitive preference, or invitational. The effect of each type of priority follows:

Absolute priority: Under an absolute priority, we consider only applications that meet the priority (34 CFR 75.105(c)(3)).

Competitive preference priority: Under a competitive preference priority, we give competitive preference to an application by either (1) awarding additional points, depending on how well or the extent to which the application meets the competitive priority (34 CFR 75.105(c)(2)(i)); or (2) selecting an application that meets the competitive priority over an application of comparable merit that does not meet the priority (34 CFR 75.105(c)(2)(ii)).

Invitational priority: Under an invitational priority, we are particularly interested in applications that meet the invitational priority. However, we do not give an application that meets the

invitational priority a competitive or absolute preference over other applications (34 CFR 75.105(c)(1)).

Priority

Curriculum Modules: Experiential Activities To Enhance Rehabilitation Empowerment

For the purposes of this priority, empowerment is defined as individuals having the information, education, training, confidence, and high expectations needed to make effective employment and life-related decisions.

This priority supports projects that provide experiential activities that increase the amount of personal contact and experience of VR students with individuals with disabilities in non-counseling settings. This priority is intended to support the design, piloting, evaluation, and dissemination of course modules to be incorporated into rehabilitation training program curricula that enhance student understanding of the culture of individuals with disabilities and of the behaviors that enhance empowerment from the perspective of individuals with disabilities.

Projects funded under this priority must incorporate experiential activities in which students interact directly with persons with disabilities in situations other than traditional and hierarchical student counselor to consumer relationships.

Projects must include an evaluation of the impact of the course module or modules and a dissemination plan to be carried out in the last year of the project period.

Intergovernmental Review

This program is subject to Executive Order 12372 and the regulations in 34 CFR part 79. One of the objectives of the Executive order is to foster an intergovernmental partnership and a strengthened federalism. The Executive order relies on processes developed by State and local governments for coordination and review of proposed Federal financial assistance.

This document provides early notification of our specific plans and actions for this program.

Applicable Program Regulations: 34 CFR parts 385 and 387.

Electronic Access to This Document

You may view this document, as well as all other Department of Education documents published in the **Federal Register**, in text or Adobe Portable Document Format (PDF) on the Internet at the following site: *www.ed.gov/legislation/FedRegister*.

To use PDF you must have Adobe Acrobat Reader, which is available free at this site. If you have questions about using PDF, call the U.S. Government Printing Office (GPO), toll free, at 1–888–293–6498; or in the Washington, DC, area at (202) 512–1530.

Note: The official version of this document is the document published in the **Federal Register**. Free Internet access to the official edition of the **Federal Register** and the Code of Federal Regulations is available on GPO Access at: *http://www.access.gpo.gov/nara/index.html*.

(Catalog of Federal Domestic Assistance Number 84.263A Experimental and Innovative Training)

Program Authority: 29 U.S.C. 772.

Dated: February 20, 2003.

Robert H. Pasternack,

Assistant Secretary for Special Education and Rehabilitative Services.

[FR Doc. 03–4549 Filed 2–25–03; 8:45 am]

BILLING CODE 4000–01–U

DEPARTMENT OF EDUCATION

[CFDA No.: 84.263A]

Experimental and Innovative Training; Notice Inviting Applications for New Awards for Fiscal Year (FY) 2003

Purpose of Program: The Experimental and Innovative Training program provides financial assistance for projects designed—

(1) To develop new types of training programs for rehabilitation personnel and demonstrate the effectiveness of these new types of training programs for rehabilitation personnel in providing rehabilitation services to individuals with disabilities; and

(2) To develop new and improved methods of training rehabilitation personnel so that there may be a more effective delivery of rehabilitation services by State and other rehabilitation agencies.

Eligible Applicants: States and public or nonprofit agencies and organizations, including Indian tribes and institutions of higher education, are eligible for assistance under this program.

Applications Available: February 27, 2003.

Deadline for Transmittal of Applications: April 15, 2003.

Deadline for Intergovernmental Review: June 14, 2003.

Estimated Available Funds: The Administration has requested $42,629,000 for the Rehabilitation Training program for FY 2003, of which an estimated $400,000 would be allocated for this competition. The actual level of funding, if any, depends on final congressional action. However, we are inviting applications to allow enough time to complete the grant process if Congress appropriates funds for this program.

Estimated Range of Awards: $75,000 to $100,000.

Estimated Average Size of Awards: $100,000.

Estimated Number of Awards: 4.

Note: The Department is not bound by any estimates in this notice.

Project Period: Up to 36 months.

Page Limit: Part III of the application, the application narrative, is where you, the applicant, address the selection criteria that reviewers use to evaluate your application. You must limit Part III to the equivalent of no more than 50 pages, using the following standards:

- A ''page'' is 8.5″ × 11″, on one side only, with 1″ margins at the top, bottom, and both sides.
- Double space (no more than three lines per vertical inch) all text in the application narrative, including titles, headings, footnotes, quotations, references, and captions, as well as all text in charts, tables, figures, and graphs.
- Use a font that is either 12-point or larger or no smaller than 10 pitch (characters per inch).

The page limit does not apply to Part I, the cover sheet, Part II, the budget section, including the narrative budget justification; Part IV, the assurances and certifications; or the one-page abstract, the resumes, the bibliography, or the letters of support. However, you must include all of the application narrative in Part III.

We will reject your application if—

- You apply these standards and exceed the page limit; or
- You apply other standards and exceed the equivalent of the page limit.

Applicable Regulations: (a) The Education Department General Administrative Regulations (EDGAR) in 34 CFR parts 74, 75, 77, 79, 80, 81, 82, 85, 86, and 99. (b) The regulations for this program in 34 CFR parts 385 and 387.

Note: The regulations in 34 CFR part 79 apply to all applicants except federally recognized Indian tribes.

Note: The regulations in 34 CFR part 86 apply to institutions of higher education only.

Selection Criteria: In evaluating an application for a new grant under this competition, we use the selection criteria in 34 CFR 385.31 and 387.30. The selection criteria to be used for this competition will be provided in the application package for this competition.

Priority: This competition focuses on projects designed to meet the priority in the notice of final priority for this program, published elsewhere in this issue of the **Federal Register**.

For FY 2003, this priority is an absolute priority. Under 34 CFR 75.105(c)(3), we consider only applications that meet the priority.

Application Procedures

Note: Some of the procedures in these instructions for transmitting applications differ from those in the Education Department General Administrative Regulations (EDGAR) (34 CFR 75.102). Under the Administrative Procedure Act (5 U.S.C. 553) the Department generally offers interested parties the opportunity to comment on proposed regulations. However, these amendments make procedural changes only and do not establish new substantive policy. Therefore, under 5 U.S.C. 553(b)(A), the Secretary has determined that proposed rulemaking is not required.

Pilot Project for Electronic Submission of Applications

In FY 2003, the U.S. Department of Education is continuing to expand its pilot project for electronic submission of applications to include additional formula grant programs and additional discretionary grant competitions. The Experimental and Innovative Training program, CFDA No. 84.263A, is one of the programs included in the pilot project. If you are an applicant under the Experimental and Innovative Training program, you may submit your application to us in either electronic or paper format.

The pilot project involves the use of the Electronic Grant Application System (e-Application) portion of the Grant Administration and Payment System (GAPS). Users of e-Application will be entering data on-line while completing their applications. You may not e-mail a soft copy of a grant application to us. If you participate in this voluntary pilot project by submitting an application electronically, the data you enter on-line will be saved into a database. We request your participation in e-Application. We shall continue to evaluate its success and solicit suggestions for improvement.

If you participate in e-Application, please note the following:

- Your participation is voluntary.
- You will not receive any additional point value because you submit a grant application in electronic format, nor will we penalize you if you submit an application in paper format. When you enter the e-Application system, you will find information about its hours of operation.
- You may submit all documents electronically, including the Application for Federal Assistance (ED 424), Budget Information—Non-Construction Programs (ED 524), and all necessary assurances and certifications.
- After you electronically submit your application, you will receive an automatic acknowledgement, which will include a PR/Award number (an identifying number unique to your application).
- Within 3 working days after submitting your electronic application, fax a signed copy of the Application for Federal Assistance (ED 424) to the Application Control Center after following these steps:

(1) Print ED 424 from the e-Application system.

(2) The institution's Authorizing Representative must sign this form.

(3) Place the PR/Award number in the upper right hand corner of the hard copy signature page of the ED 424.

(4) Fax the signed ED 424 to the Application Control Center at (202) 260–1349.

- We may request that you give us original signatures on all other forms at a later late.
- Closing Date Extension in Case of System Unavailability: If you elect to participate in the e-Application pilot for the Experimental and Innovative Training program and you are prevented from submitting your application on the closing date because the e-Application system is unavailable, we will grant you an extension of 1 business day in order to transmit your application electronically, by mail, or by hand delivery. For us to grant this extension—

(1) You must be a registered user of e-Application, and have initiated an e-Application for this competition; and

(2)(a) The e-Application system must be unavailable for 60 minutes or more between the hours of 8:30 a.m. and 3:30 p.m., Washington, DC time, on the deadline date; or

(b) The e-Application system must be unavailable for any period of time during the last hour of operation (that is, for any period of time between 3:30 and 4:30 p.m., Washington, DC time) on the deadline date.

The Department must acknowledge and confirm these periods of unavailability before granting you an extension. To request this extension you must contact either (1) the person listed elsewhere in this notice under **FOR FURTHER INFORMATION CONTACT** or (2) the e-Grants help desk at 1–888–336–8930.

You may access the electronic grant application for the Experimental and Innovative Training program at: *http://e-grants.ed.gov*.

We have included additional information about the e-Application pilot project (see Parity Guidelines between Paper and Electronic Applications) in the application package.

For Applications Contact: Education Publications Center (ED Pubs), PO Box 1398, Jessup, MD 20794–1398. Telephone (toll free): 1–877–433–7827. FAX: (301) 470–1244. If you use a telecommunications device for the deaf (TDD), you may call (toll free): 1–877–576–7734.

You may also contact ED Pubs at its Web site: *http://www.ed.gov/pubs/edpubs.html*.

Or you may contact ED Pubs at its e-mail address: *edpubs@inet.ed.gov*.

If you request an application from ED Pubs, be sure to identify this competition as follows: CFDA number 84.263A.

Individuals with disabilities may obtain a copy of the application package in an alternative format by contacting the Grants and Contracts Services Team, U.S. Department of Education, 400 Maryland Avenue, SW., room 3317, Switzer Building, Washington, DC 20202–2550. Telephone: (202) 205–8207. If you use a telecommunications device for the deaf (TDD), you may call the Federal Information Relay Service (FIRS) at 1–800–877–8339. However, the Department is not able to reproduce in an alternative format the standard forms included in the application package.

FOR FURTHER INFORMATION CONTACT: Edward R. Smith, U.S. Department of Education, 400 Maryland Avenue, SW., (room 3318, Switzer Building), Washington, DC 20202–2649. Telephone: (202) 205–0136 or via Internet: *Edward.Smith@ed.gov*.

If you use a telecommunications device for the deaf (TDD), you may call the Federal Information Relay Service (FIRS) at 1–800–877–8339.

Individuals with disabilities may obtain this document in an alternative format (*e.g.*, Braille, large print, audiotape, or computer diskette) on request to the program contact person listed under **FOR FURTHER INFORMATION CONTACT**.

Electronic Access to This Document

You may view this document, as well as all other Department of Education documents published in the **Federal Register**, in text or Adobe Portable Document Format (PDF) on the Internet at the following site: *http://www.ed.gov/legislation/FedRegister*.

To use PDF you must have Adobe Acrobat Reader, which is available free at this site. If you have questions about using PDF, call the U.S. Government Printing Office (GPO), toll free, at 1–888–293–6498; or in the Washington, DC, area at (202) 512–1530.

Note: The official version of this document is the document published in the **Federal Register**. Free Internet access to the official edition of the **Federal Register** and the Code of Federal Regulations is available on GPO Access at: *http://www.access.gpo.gov/nara/index.html*.

Program Authority: 29 U.S.C. 772.

Dated: February 20, 2003.

Robert H. Pasternack,

Assistant Secretary for Special Education and Rehabilitative Services.

[FR Doc. 03–4550 Filed 2–25–03; 8:45 am]

BILLING CODE 4000–01–U

Federal Register

Wednesday,
February 26, 2003

Part III

Environmental Protection Agency

Fifty-First Report of the TSCA Interagency Testing Committee to the Administrator, Receipt of Report and Request for Comments; Notice

ENVIRONMENTAL PROTECTION AGENCY

[OPPT–2002–0075; FRL–7285–7]

Fifty-First Report of the TSCA Interagency Testing Committee to the Administrator; Receipt of Report and Request for Comments

AGENCY: Environmental Protection Agency (EPA).

ACTION: Notice.

SUMMARY: The Toxic Substances Control Act (TSCA) Interagency Testing Committee (ITC) transmitted its 51st ITC Report to the Administrator of the United States Environmental Protection Agency on November 26, 2002. In the 51st ITC Report, which is included in this notice, the ITC is adding 43 vanadium compounds to its *Priority Testing List* and removing 39 chemicals from the *Priority Testing List*.

The ITC is asking EPA to add 43 vanadium compounds to the TSCA section 8(a) Preliminary Assessment Information Reporting (PAIR) rule and rescinding its requests to add 2 chemicals to the TSCA section 8(a) PAIR rule and 36 chemicals to the TSCA section 8(d) Health and Safety Data Reporting rule.

The ITC continues to request voluntary information submissions directly from trade organizations, producers, and importers, while working to improve the utility of the Voluntary Information Submissions Innovative Online Network (VISION) and Voluntary Information Submissions Policy (VISP).

DATES: Comments, identified by docket ID number OPPT–2002–0075, must be received on or before March 28, 2003.

ADDRESSES: Comments may be submitted electronically, by mail, or through hand delivery/courier. Follow the detailed instructions as provided in Unit I. of the **SUPPLEMENTARY INFORMATION.**

FOR FURTHER INFORMATION CONTACT: *For general information contact*: Barbara Cunningham, Acting Director, Environmental Assistance Division (7408M), Office of Pollution Prevention and Toxics, Environmental Protection Agency, 1200 Pennsylvania Ave., NW., Washington, DC 20460–0001; telephone number: (202) 554–1404; e-mail address: TSCA-Hotline@epa.gov.

For technical information contact: John D. Walker, ITC Executive Director (7401M), Environmental Protection Agency, 1200 Pennsylvania Ave., NW., Washington, DC 20460–0001; telephone number: (202) 564–7526; fax: (202) 564–7528; e-mail address: walker.johnd@epa.gov.

SUPPLEMENTARY INFORMATION:

I. General Information

A. Does this Action Apply to Me?

This notice is directed to the public in general. It may, however, be of particular interest to you if you manufacture (defined by statute to include import) and/or process TSCA-covered chemicals and you may be identified under the North American Industrial Classification System (NAICS) codes 325 (Chemical Manufacturing) and 32411(Petroleum Refineries). Because this notice is directed to the general public and other entities may also be interested, the Agency has not attempted to describe all the specific entities that may be interested in this action. If you have any questions regarding the applicability of this action to a particular entity, consult the technical person listed under **FOR FURTHER INFORMATION CONTACT.**

B. How Can I Get Copies of this Document and Other Related Information?

1. *Docket*. EPA has established an official public docket for this action under docket identification (ID) number OPPT–2002–0075. The official public docket consists of the documents specifically referenced in this action, any public comments received, and other information related to this action. Although a part of the official docket, the public docket does not include Confidential Business Information (CBI) or other information whose disclosure is restricted by statute. The official public docket is the collection of materials that is available for public viewing at the EPA Docket Center, Rm. B102–Reading Room, EPA West, 1301 Constitution Ave., NW., Washington, DC. The EPA Docket Center is open from 8:30 a.m. to 4:30 p.m., Monday through Friday, excluding legal holidays. The EPA Docket Center Reading Room telephone number is (202) 566–1744 and the telephone number for the OPPT Docket, which is located in EPA Docket Center, is (202) 566–0280.

2. *Electronic access*. You may access this **Federal Register** document electronically through the EPA Internet under the ''**Federal Register**'' listings at http://www.epa.gov/fedrgstr/.

An electronic version of the public docket is available through EPA's electronic public docket and comment system, EPA Dockets. You may use EPA Dockets at http://www.epa.gov/edocket/ to submit or view public comments, access the index listing of the contents of the official public docket, and to access those documents in the public docket that are available electronically. Although not all docket materials may be available electronically, you may still access any of the publicly available docket materials through the docket facility identified in Unit I.B.1. Once in the system, select ''search,'' then key in the appropriate docket ID number.

Certain types of information will not be placed in the EPA Dockets. Information claimed as CBI and other information whose disclosure is restricted by statute, which is not included in the official public docket, will not be available for public viewing in EPA's electronic public docket. EPA's policy is that copyrighted material will not be placed in EPA's electronic public docket but will be available only in printed, paper form in the official public docket. To the extent feasible, publicly available docket materials will be made available in EPA's electronic public docket. When a document is selected from the index list in EPA Dockets, the system will identify whether the document is available for viewing in EPA's electronic public docket. Although not all docket materials may be available electronically, you may still access any of the publicly available docket materials through the docket facility identified in Unit I.B.1. EPA intends to work towards providing electronic access to all of the publicly available docket materials through EPA's electronic public docket.

For public commenters, it is important to note that EPA's policy is that public comments, whether submitted electronically or in paper, will be made available for public viewing in EPA's electronic public docket as EPA receives them and without change, unless the comment contains copyrighted material, CBI, or other information whose disclosure is restricted by statute. When EPA identifies a comment containing copyrighted material, EPA will provide a reference to that material in the version of the comment that is placed in EPA's electronic public docket. The entire printed comment, including the copyrighted material, will be available in the public docket.

Public comments submitted on computer disks that are mailed or delivered to the docket will be transferred to EPA's electronic public docket. Public comments that are mailed or delivered to the docket will be scanned and placed in EPA's electronic public docket. Where practical, physical objects will be photographed, and the photograph will be placed in EPA's electronic public docket along with a

brief description written by the docket staff.

C. How and To Whom Do I Submit Comments?

You may submit comments electronically, by mail, or through hand delivery/courier. To ensure proper receipt by EPA, identify the appropriate docket ID number in the subject line on the first page of your comment. Please ensure that your comments are submitted within the specified comment period. Comments received after the close of the comment period will be marked ''late.'' EPA is not required to consider these late comments. If you wish to submit CBI or information that is otherwise protected by statute, please follow the instructions in Unit I.D. Do not use EPA Dockets or e-mail to submit CBI or information protected by statute.

1. *Electronically*. If you submit an electronic comment as prescribed in this unit, EPA recommends that you include your name, mailing address, and an e-mail address or other contact information in the body of your comment. Also include this contact information on the outside of any disk or CD ROM you submit, and in any cover letter accompanying the disk or CD ROM. This ensures that you can be identified as the submitter of the comment and allows EPA to contact you in case EPA cannot read your comment due to technical difficulties or needs further information on the substance of your comment. EPA's policy is that EPA will not edit your comment, and any identifying or contact information provided in the body of a comment will be included as part of the comment that is placed in the official public docket, and made available in EPA's electronic public docket. If EPA cannot read your comment due to technical difficulties and cannot contact you for clarification, EPA may not be able to consider your comment.

i. *EPA Dockets*. Your use of EPA's electronic public docket to submit comments to EPA electronically is EPA's preferred method for receiving comments. Go directly to EPA Dockets at http://www.epa.gov/edocket, and follow the online instructions for submitting comments. Once in the system, select ''search,'' and then key in docket ID number OPPT–2002–0075. The system is an ''anonymous access'' system, which means EPA will not know your identity, e-mail address, or other contact information unless you provide it in the body of your comment.

ii. *E-mail*. Comments may be sent by e-mail to oppt.ncic@epa.gov, Attention: Docket ID Number OPPT–2002–0075. In contrast to EPA's electronic public docket, EPA's e-mail system is not an ''anonymous access'' system. If you send an e-mail comment directly to the docket without going through EPA's electronic public docket, EPA's e-mail system automatically captures your e-mail address. E-mail addresses that are automatically captured by EPA's e-mail system are included as part of the comment that is placed in the official public docket, and made available in EPA's electronic public docket.

iii. *Disk or CD ROM*. You may submit comments on a disk or CD ROM that you mail to the mailing address identified in Unit I.C.2. These electronic submissions will be accepted in WordPerfect or ASCII file format. Avoid the use of special characters and any form of encryption.

2. *By mail*. Send your comments to: Document Control Office (7407M), Office of Pollution Prevention and Toxics (OPPT), Environmental Protection Agency, 1200 Pennsylvania Ave., NW., Washington, DC 20460–0001.

3. *By hand delivery or courier*. Deliver your comments to: OPPT Document Control Office (DCO) in EPA East Building Rm. 6428, 1201 Constitution Ave., NW., Washington, DC. Attention: Docket ID Number OPPT–2002–0075. The DCO is open from 8 a.m. to 4 p.m., Monday through Friday, excluding legal holidays. The telephone number for the DCO is (202) 564–8930.

D. How Should I Submit CBI To the Agency?

Do not submit information that you consider to be CBI electronically through EPA's electronic public docket or by e-mail. You may claim information that you submit to EPA as CBI by marking any part or all of that information as CBI (if you submit CBI on disk or CD ROM, mark the outside of the disk or CD ROM as CBI and then identify electronically within the disk or CD ROM the specific information that is CBI). Information so marked will not be disclosed except in accordance with procedures set forth in 40 CFR part 2.

In addition to one complete version of the comment that includes any information claimed as CBI, a copy of the comment that does not contain the information claimed as CBI must be submitted for inclusion in the public docket and EPA's electronic public docket. If you submit the copy that does not contain CBI on disk or CD ROM, mark the outside of the disk or CD ROM clearly that it does not contain CBI. Information not marked as CBI will be included in the public docket and EPA's electronic public docket without prior notice. If you have any questions about CBI or the procedures for claiming CBI, please consult the technical person listed under **FOR FURTHER INFORMATION CONTACT**.

E. What Should I Consider as I Prepare My Comments for EPA?

We invite you to provide your views on the various options we propose, new approaches we have not considered, the potential impacts of the various options (including possible unintended consequences), and any data or information that you would like the Agency to consider during the development of the final action. You may find the following suggestions helpful for preparing your comments:

1. Explain your views as clearly as possible.
2. Describe any assumptions that you used.
3. Provide copies of any technical information and/or data you used that support your views.
4. If you estimate potential burden or costs, explain how you arrived at the estimate that you provide.
5. Provide specific examples to illustrate your concerns.
6. Offer alternative ways to improve the notice or collection activity.
7. Make sure to submit your comments by the deadline in this notice.
8. To ensure proper receipt by EPA, be sure to identify the docket ID number assigned to this action in the subject line on the first page of your response. You may also provide the name, date, and **Federal Register** citation.

II. Background

The Toxic Substances Control Act (TSCA) (15 U.S.C. 2601 *et seq.*) authorizes the Administrator of the EPA to promulgate regulations under section 4(a) of TSCA requiring testing of chemicals and chemical mixtures in order to develop data relevant to determining the risks that such chemicals and chemical mixtures may present to health or the environment. Section 4(e) of TSCA established the ITC to recommend chemicals and chemical mixtures to the Administrator of the EPA for priority testing consideration. Section 4(e) of TSCA directs the ITC to revise the TSCA section 4(e) *Priority Testing List* at least every 6 months.

A. The 51th ITC Report

The 51th ITC Report was transmitted to the EPA's Administrator on November 26, 2002, and is included in this notice. In the 51st ITC Report, the ITC:

1. Adds 43 vanadium compounds to its *Priority Testing List* and removes

thiophenol, 7 alkylphenols and alkylphenol ethoxylates, 3 Degradation Effects Bioconcentration Information Testing Strategies (DEBITS) chemicals, and 28 indium chemicals from the *Priority Testing List*.

2. Asks EPA to add 43 vanadium compounds to the TSCA section 8(a) PAIR rule and rescinds its request to add 3H-pyrazol-3-one, 5-((2-chloro-5-nitrophenyl)amino)-2,4-dihydro-2-(2,4,6-trichlorophenyl)- (CAS No. 30707–68–7) and phenol, 4,4'-[2,2,2-trifluoro-1-(trifluoromethyl)ethylidene]bis- (CAS No. 1478–61–1) to the TSCA section 8(a) PAIR rule.

3. Rescinds its request to EPA to add 8 nonylphenol polyethoxylate degradation products and 28 indium compounds to the TSCA section 8(d) Health and Safety Data Reporting rule.

4. Continues to request voluntary information submissions directly from trade organizations, producers, and importers, while working to improve the utility of VISION and VISP.

B. Status of the Priority Testing List

The current TSCA 4(e) *Priority Testing List* as of November 2002 can be found in Table 1 of the 51st ITC Report, which is included in this notice.

List of Subjects

Environmental protection, Chemicals, Hazardous substances.

Dated: February 19, 2003.

Wardner G. Penberthy,

Acting Director, Chemical Control Division, Office of Pollution Prevention and Toxics.

Fifty-First Report of the TSCA Interagency Testing Committee to the Administrator, U.S. Environmental Protection Agency

Table of Contents

Summary

The TSCA Section 4(e) *Priority Testing List* (November 2002)

I. Background
II. TSCA Section 8 Reporting
A. TSCA Section 8 Reporting Rules
B. ITC's Use of TSCA Section 8 and Other Information
C. Previous and New Requests to Add Chemicals to TSCA Section 8(a) PAIR Rule
D. Rescinding Requests to Add Chemicals to TSCA Section 8(a) PAIR Rules
E. Previous Requests to Add Chemicals to TSCA Section 8(d) HaSDR Rules
F. Rescinding Requests to Add Chemicals to TSCA Section 8(d) HaSDR Rules
III. ITC's Activities During this Reporting Period (May to November 2002)
A. Voluntary Information Submissions
B. DEBITS
IV. Revisions to the TSCA Section 4(e) *Priority Testing List*
A. Chemicals Added to the *Priority Testing List*: Vanadium Compounds
B. Chemicals Removed From the *Priority Testing List*
1. Thiophenol.
2. Seven alkylphenols and alkylphenol ethoxylates.
3. DEBITS 1 chemical.
4. Indium compounds.
V. References
VI. TSCA Interagency Testing Committee

Summary

In this 51st Report, the ITC is adding 43 vanadium compounds to the *Priority Testing List*. The ITC is removing thiophenol, 7 alkylphenols and alkylphenol ethoxylates, 3 Degradation Effects Bioconcentration Information Testing Strategies (DEBITS) chemicals, and 28 indium chemicals from the *Priority Testing List*.

The ITC is asking the United States Environmental Protection Agency (USEPA) to add 43 vanadium compounds to the Toxic Substances Control Act (TSCA) section 8(a) Preliminary Assessment Information Reporting (PAIR) rule and rescinding its request to add 3H-pyrazol-3-one, 5-((2-chloro-5-nitrophenyl)amino)-2,4-dihydro-2- (2,4,6-trichlorophenyl)- (CAS No. 30707–68–7) and phenol, 4,4'-[2,2,2-trifluoro-1-(trifluoromethyl)ethylidene]bis- (CAS No. 1478–61–1) to the TSCA section 8(a) PAIR rule. The ITC is rescinding its request to USEPA to add 8 nonylphenol polyethoxylate degradation products, and 28 indium compounds to the TSCA section 8(d) Health and Safety Data Reporting (HaSDR) rule.

The ITC will continue to request voluntary information submissions directly from trade organizations, producers, and importers, while working to improve the utility of the Voluntary Information Submissions Innovative Online Network (VISION) and Voluntary Information Submissions Policy (VISP).

The revised TSCA section 4(e) *Priority Testing List* follows as Table 1.

TABLE 1.—THE TSCA SECTION 4(E) PRIORITY TESTING LIST (NOVEMBER 2002)

ITC Report	Date	Chemical name/Group	Action
31	January 1993	13 Chemicals with insufficient dermal absorption rate data	Designated
32	May 1993	16 Chemicals with insufficient dermal absorption rate data	Designated
35	November 1994	4 Chemicals with insufficient dermal absorption rate data	Designated
37	November 1995	2 Alkylphenols	Recommended
41	November 1997	1 Alkylphenol	Recommended
42	May 1998	3-Amino-5-mercapto-1,2,4-triazole	Recommended
42	May 1998	Glycoluril	Recommended
47	November 2000	9 Indium compounds	Recommended
48	May 2001	Benzenamine, 3-chloro-2,6-dinitro-N,N-dipropyl-4-(trifluoromethyl)-	Recommended

TABLE 1.—THE TSCA SECTION 4(E) PRIORITY TESTING LIST (NOVEMBER 2002)—Continued

ITC Report	Date	Chemical name/Group	Action
49	November 2001	Stannane, dimethylbis[(1-oxoneodecyl)oxy]-	Recommended
50	May 2002	Benzene, 1,3,5-tribromo-2-(2-propenyloxy)-	Recommended
50	May 2002	1-Triazene, 1,3-diphenyl-	Recommended
51	November 2002	43 Vanadium compounds	Recommended

I. Background

The ITC was established by section 4(e) of TSCA ''to make recommendations to the Administrator respecting the chemical substances and mixtures to which the Administrator should give priority consideration for the promulgation of a rule for testing under section 4(a).... At least every six months ..., the Committee shall make such revisions to the *Priority Testing List* as it determines to be necessary and transmit them to the Administrator together with the Committee's reasons for the revisions'' (Public Law 94–469, 90 Stat. 2003 *et seq.*, 15 U.S.C. 2601 *et seq.*). Since its creation in 1976, the ITC has submitted 50 semi-annual (May and November) Reports to the USEPA Administrator transmitting the *Priority Testing List* and its revisions. ITC Reports are available from the ITC's web site (http://www.epa.gov/opptintr/itc) within a few days of submission to the Administrator and from http://www.epa.gov/fedrgstr after publication in the **Federal Register**. The ITC meets monthly and produces its revisions to the *Priority Testing List* with administrative and technical support from the ITC Staff and ITC Members and their U.S. Government organizations and contract support provided by USEPA. ITC Members and Staff are listed at the end of this report.

II. TSCA Section 8 Reporting

A. TSCA Section 8 Reporting Rules

Following receipt of the ITC's Report (and the revised *Priority Testing List*) by the USEPA Administrator, the USEPA's Office of Pollution Prevention and Toxics (OPPT) appends the chemicals added to the *Priority Testing List* to TSCA section 8(a) PAIR and TSCA section 8(d) HaSDR rules. The PAIR rule requires producers and importers of Chemical Abstract Service (CAS)-numbered chemicals added to the *Priority Testing List* to submit production and exposure reports (http://www.epa.gov/opptintr/chemtest/pairform.pdf). The HaSDR rule requires producers, importers, and processors of all chemicals (including those with no CAS numbers) added to the *Priority Testing List* to submit unpublished health and safety studies under TSCA section 8(d) that must be in compliance with the revised HaSDR rule (Ref. 1). All submissions must be received by USEPA within 90 days of the reporting rules **Federal Register** publication date. The reporting rules are automatically promulgated by OPPT unless otherwise requested by the ITC.

B. ITC's Use of TSCA Section 8 and Other Information

The ITC reviews the TSCA section 8(a) PAIR rule reports, TSCA section 8(d) HaSDR rule studies, and other information that becomes available after the ITC adds chemicals to the *Priority Testing List*. Other information includes TSCA section 4(a) and 4(d) studies, TSCA section 8(c) submissions, TSCA section 8(e) ''substantial risk'' notices, ''For Your Information'' (FYI) submissions, unpublished data submitted to and from U.S. Government organizations represented on the ITC, published papers, as well as use, exposure, effects, and persistence data that are voluntarily submitted to the ITC by manufacturers, importers, processors, and users of chemicals recommended by the ITC. The ITC reviews this information and determines if data needs should be revised, if chemicals should be removed from the *Priority Testing List* or if recommendations should be changed to designations. To avoid duplicate reporting, the ITC carefully coordinates its information solicitations and reporting requirements with other national and international testing programs, e.g., the National Toxicology Program (NTP) (http://ntp-server.niehs.nih.gov/), the Organization for Economic Cooperation and Development (OECD) Screening Information Data Set (SIDS) Program (http://www.oecd.org), and the USEPA's High Production Volume (HPV) Challenge Program (http://www.epa.gov/opptintr/chemrtk/volchall.htm).

C. Previous and New Requests to Add Chemicals to TSCA Section 8(a) PAIR Rules

The ITC has requested in previous reports that USEPA add the following chemicals to the TSCA section 8(a) PAIR rules: Benzenamine, 3-chloro-2,6-dinitro-N,N-dipropyl-4-(trifluoromethyl)- (CAS No. 29091–20–1) (48th Report, Ref. 2); stannane, dimethylbis[(1-oxoneodecyl)oxy]- (CAS No. 68928–76–7) (49th Report, Ref. 3); and benzene, 1,3,5-tribromo-2-(2-propenyloxy)- (CAS No. 3278–89–5) and 1-triazene, 1,3-diphenyl- (CAS No.136–35–6) (50th Report, Ref. 4).

The ITC requests that USEPA add the 43 vanadium compounds described in this 51st Report to the TSCA section 8(a) PAIR rule.

D. Rescinding Requests to Add Chemicals to TSCA Section 8(a) PAIR Rules

The ITC is rescinding its 48th Report (Ref. 2) request to add 3H-pyrazol-3-one, 5-[(2-chloro-5-nitrophenyl)amino]-2,4-dihydro-2- (2,4,6-trichlorophenyl)- (CAS No. 30707–68–7) to the TSCA section 8(a) PAIR rule because of decreasing production volume trends from 1990 to the present. The ITC is also rescinding its 48th Report (Ref. 2) request to add phenol, 4,4'-[2,2,2-trifluoro-1-(trifluoromethyl)ethylidene]bis- (CAS No. 1478–61–1) to the TSCA section 8(a) PAIR rule because the ITC has learned that the predicted bioconcentration factor (BCF) of 500 is below the BCF threshold currently considered for action by USEPA under its Persistent, Bioaccumulative and Toxic (PBT) Chemical Program (http://www.epa.gov/opptintr/pbt).

E. Previous Requests to Add Chemicals to TSCA Section 8(d) HaSDR Rules

The ITC has requested in previous reports to the USEPA Adminstrator that the following chemicals be added to TSCA section 8(d) HaSDR rules: 3H-1,2,4-triazole-3-thione, 5-amino-1,2-dihydro- (3-amino-5-mercapto-1,2,4-triazole) (CAS No. 16691–43–3) and imidazo[4,5-d]imidazole-2,5(1H,3H)-dione, tetrahydro- (glycoluril) (CAS No.

496–46–8) (42nd Report, Ref. 5); 9 indium compounds (47th Report, Ref. 6); benzenamine, 3-chloro-2,6-dinitro-N,N-dipropyl-4- (trifluoromethyl)- (CAS No. 29091–20–1) (48th Report, Ref. 2); stannane, dimethylbis[(1-oxoneodecyl)oxy]- (CAS No. 68928–76–7) (49th Report, Ref. 3); and benzene, 1,3,5-tribromo-2-(2-propenyloxy)- (CAS No. 3278–89–5) and 1-triazene, 1,3-diphenyl- (CAS No.136–35–6) (50th Report, Ref. 4). At this time, the ITC is requesting that USEPA not add vanadium compounds to the TSCA section 8(d) HaSDR rule to allow producers and importers of vanadium compounds an opportunity to voluntarily provide the information requested in section IV.A.3. of this report.

For 3H-1,2,4-triazole-3-thione, 5-amino-1,2-dihydro- (3-amino-5-mercapto-1,2,4-triazole) and imidazo[4,5-d]imidazole-2,5-(1H,3H)-dione, tetrahydro- (glycoluril), the ITC requests that the TSCA section 8(d) HaSDR rule require the submission of pharmacokinetics, subchronic toxicity, immunotoxicity, genotoxicity, carcinogenicity, reproductive effects and developmental toxicity, and ecological effects studies. Only studies for which 3-amino-5-mercapto-1,2,4-triazole or glycoluril is ≥ 90% of the test substance by weight should be submitted.

For the 9 indium compounds remaining on the *Priority Testing List*, the ITC requests that the TSCA section 8(d) HaSDR rule require the submission of pharmacokinetics, genotoxicity, subchronic and chronic toxicity, and reproductive effects and developmental toxicity studies. Only studies where indium compounds are ≥ 90% of the test substance by weight should be submitted.

For benzenamine, 3-chloro-2,6-dinitro-N,N-dipropyl-4-(trifluoromethyl)-, the ITC requests that the TSCA section 8(d) HaSDR rule require the submission of biodegradation, bioconcentration, pharmacokinetics, subchronic toxicity, mutagenicity, reproductive effects and developmental toxicity, carcinogenicity, and ecological effects studies. Only studies where benzenamine, 3-chloro-2,6-dinitro-N,N-dipropyl-4-(trifluoromethyl)- is ≥ 90% of the test substance by weight should be submitted.

For stannane, dimethylbis[(1-oxoneodecyl)oxy]-, the ITC requests that the TSCA section 8(d) HaSDR rule require the submission of hydrolysis, biodegradation, bioconcentration, pharmacokinetics, subchronic toxicity, mutagenicity, neurotoxicity, reproductive effects and developmental toxicity, carcinogenicity, and ecological effects studies. Only studies where stannane, dimethylbis[(1-oxoneodecyl)oxy]- is ≥ 90% of the test substance by weight should be submitted.

For benzene, 1,3,5-tribromo-2-(2-propenyloxy)-, the ITC requests that the TSCA section 8(d) HaSDR rule require the submission of biodegradation, bioconcentration, pharmacokinetics, subchronic toxicity, neurotoxicity, reproductive effects and developmental toxicity, carcinogenicity, and ecological effects studies. Only studies where benzene, 1,3,5-tribromo-2-(2-propenyloxy)- is ≥ 90% of the test substance by weight should be submitted.

For 1-triazene, 1,3-diphenyl-, the ITC requests that the TSCA section 8(d) HaSDR rule require the submission of pharmacokinetics, genotoxicity, subchronic and chronic toxicity, reproductive effects and developmental toxicity studies. Only studies where 1-triazene, 1,3-diphenyl- is ≥ 90% of the test substance by weight should be submitted.

F. Rescinding Requests to Add Chemicals to TSCA Section 8(d) HaSDR Rules

The ITC is rescinding its request to USEPA to add 8 nonylphenol polyethoxylate degradation products and 28 indium compounds to the TSCA section 8(d) HaSDR rule. The request to add 8 nonylphenol polyethoxylate degradation products to the TSCA section 8(d) HaSDR rule is being rescinded because the ITC learned that they are not commercially produced (Table 2 of this unit). Data on the 8 nonylphenol polyethoxylate degradation products were summarized in the 46th Report (Ref. 7). The ITC is rescinding its request to add 28 indium compounds to the TSCA section 8(d) HaSDR rule because no PAIR reports were submitted for these chemicals in response to the July 26, 2001, PAIR rule (1,000 pound reporting threshold) (Ref. 8). Data on the indium compounds were summarized in the 47th Report (Ref. 6).

TABLE 2.—NONYLPHENOL POLYETHOXYLATE (NPE) DEGRADATION PRODUCTS BEING REMOVED FROM THE PRIORITY TESTING LIST

CAS No.	Nonylphenol polyethoxylate degradation product
104–35–8	4-nonylphenol ethoxylate (NP1EO)
20427–84–3	4-nonylphenol diethoxylate (NP2EO)
51437–95–7	4-nonylphenol triethoxylate (NP3EO)
7311–27–5	4-nonylphenol tetraethoxylate (NP4EO)
3115–49–9	4-nonylphenoxy acetic acid (NP1EC)
106807–78–7	4-nonylphenoxy ethoxy acetic acid (NP2EC)
108149–59–3	4-nonylphenoxy diethoxy acetic acid (NP3EC)
184007–22–5	4-nonylphenoxy triethoxy acetic acid (NP4EC)

III. ITC's Activities During this Reporting Period (May to November 2002)

A. Voluntary Information Submissions

To promote more efficient use of information submission resources, the ITC developed the VISP and the VISION. The VISP is described in the ITC's 41st Report (Ref. 9), while the VISION is described in the ITC's 42nd Report (Ref. 5). The ITC developed the VISP and VISION as tools to provide a more cost-effective method for chemical producers, importers, processors, and users of ITC-recommended chemicals to provide voluntary information. Except for a few industries, the ITC received voluntary information submissions through the VISION on < 15% of the chemicals for which voluntary information was solicited. The ITC has not yet determined the reasons for the apparent low utilization of the VISION. In its 50th Report (Ref. 4), the ITC requested comments on procedures that could be implemented to make the VISION or other procedures for submitting voluntary information more effective.

The American Chemistry Council (ACC) provided an explanation of the chemical industry's limited participation in the VISION (Ref. 10). The ACC expressed concerns about the need to protect Confidential Business Information (CBI), the problems associated with soliciting voluntary submissions on non-HPV chemicals, the potential non-existence of specific data being requested by the ITC, and the resources required to submit studies in portable document format (PDF).

To supplement the efforts to obtain studies in PDF through the VISION, the ITC Staff has been contacting the producers and importers of ITC-recommended chemicals to obtain voluntary information submissions. These efforts were highly successful for the chemicals identified through DEBITS. The ITC Staff will continue to contact the producers and importers of ITC-recommended chemicals to obtain voluntary information submissions as it continues its efforts to improve the utility of the VISP and VISION.

During this reporting period, the ITC acknowledges the voluntary information submissions from the following organizations: 3M Corporation; Albemarle Corporation; Amfine Chemical Corporation; Alkylphenol & Ethoxylates Research Council; Akzo Nobel Chemicals, Inc.; BASF Corporation; Bayer Corporation; Biddle Sawyer Corporation; Canon USA, Inc.; Ciba Specialty Chemicals Corporation; Cognis Corporation; Crompton Corporation; E.I. duPont de Nemours and Company; Eastman Chemical Company; ExxonMobil Corporation; Great Lakes Chemical Company; Hercules, Inc.; Lonza, Inc.; Lubrizol Corporation; Magruder Color Company; Noveon, Inc.; Schenectady International, Inc.; Society of Plastics Industry; and Strucktol Company.

Following the transmittal of this 51st Report to the USEPA Administrator, the ITC Staff will contact the producers and importers of the 9 indium compounds remaining on the *Priority Testing List* to obtain the following information to adequately access the extent and degree of exposure and potential hazard associated with indium compounds:

1. Recent non-CBI estimates of annual production or importation volume trends.
2. Use information, including percentages of production or importation that are associated with different uses.
3. Estimates of the number of workers and concentrations of indium compounds to which workers may be exposed during manufacture or processing including smelting processes, leaching processes, recovery of scrap material, deposition of film coatings, soldering, and production of electrical components including, but not limited to semiconductors.

B. DEBITS

In its 45th through 50th Reports (Refs. 2–4, 6, 7, and 11), the ITC described its strategies to screen and evaluate chemicals with persistence and bioconcentration potential. These activities are referred to as DEBITS. DEBITS provides a means to prioritize chemicals for information reporting and testing based on degradation and bioconcentration potential and availability of effects data. For DEBITS 1, the ITC used criteria to screen 12,685 chemicals and ultimately review 458, the disposition of which was described in the 45th through 50th Reports (Refs. 2–4, 6, 7, and 11). As a result of implementing DEBITS 1, the *Priority Testing List* contains three chemicals with persistence and bioconcentration potential that the USEPA may consider for its PBT Program: Benzenamine, 3-chloro-2,6-dinitro-N,N-dipropyl-4-(trifluoromethyl)-; stannane, dimethylbis[(1-oxoneodecyl)oxy]-; and benzene, 1,3,5-tribromo-2-(2-propenyloxy)-.

DEBITS 2 started with 8,511 chemicals with production volumes > 10,000 lbs reported to USEPA in response to the 1998 Inventory Update Rule (IUR). From these 8,511 chemicals, 30 non-HPV chemicals were identified that had 1998 production volumes > 50,000 lbs, predicted biodegradation half-lives > 2 months and predicted bioconcentration factors > 1,000. The ITC contacted manufacturers and importers of these 30 DEBITS 2 chemicals to solicit voluntary information on production and uses, and unpublished toxicity data. The ITC received production and use information for 22 DEBITS 2 chemicals and unpublished toxicity studies for 13 DEBITS 2 chemicals. After reviewing this and other available information the ITC deferred the 30 DEBITS 2 chemicals for information reporting rules. A brief rationale for deferring each DEBITS 2 chemical is given in Table 3 of this unit.

TABLE 3.—RATIONALES FOR DEFERRING 30 DEBITS 2 CHEMICALS

CAS No.	Chemical name	Rationale
118–74–1	Benzene, hexachloro-	Not domestically produced or imported
128–69–8	Perylo[3,4-cd:9,10-c'd']dipyran-1,3,8,10-tetrone	Potential low bioavailability
133–14–2	Peroxide, bis(2,4-dichlorobenzoyl)	Low exposure potential from use
423–50–7	1-Hexanesulfonyl fluoride, 1,1,2,2,3,3,4,4,5,5,6,6,6-tridecafluoro-	Perfluorinated chemical referred to USEPA
509–34–2	Spiro[isobenzofuran-1(3H),9'-[9H]xanthen]-3-one, 3',6'-bis(diethylamino)-	Not domestically produced or imported

TABLE 3.—RATIONALES FOR DEFERRING 30 DEBITS 2 CHEMICALS—Continued

CAS No.	Chemical name	Rationale
678–39–7	1-Decanol, 3,3,4,4,5,5,6,6,7,7,8,8,9,9,10,10,10-heptadecafluoro-	Perfluorinated chemical referred to USEPA
3006–86–8	Peroxide, cyclohexylidenebis[(1,1-dimethylethyl)	Low exposure potential from use
3864–99–1	Phenol, 2-(5-chloro-2H-benzotriazol-2-yl)-4,6-bis(1,1-dimethylethyl)-	Adequate toxicity studies available
4051–63–2	[1,1'-Bianthracene]-9,9',10,10'-tetrone, 4,4'-diamino-	Potential low bioavailability
4162–45–2	Ethanol, 2,2'-[(1-methylethylidene)bis[(2,6-dibromo-4,1-phenylene)oxy]]bis-	Not domestically produced or imported
13417–01–1	1-Octanesulfonamide, N-[3-(dimethylamino)propyl]-1,1,2,2,3,3,4,4,5,5,6,6,7,7,8,8,8-heptadecafluoro-	Perfluorinated chemical referred to USEPA
15667–10–4	Peroxide, cyclohexylidenebis[(1,1-dimethylpropyl)	Low exposure potential from use
16090–14–5	Ethanesulfonyl fluoride, 2-[1-[difluoro[(trifluoroethenyl)oxy]methyl]-1,2,2,2-tetrafluoroethoxy]-1,1,2,2-tetrafluoro-	Perfluorinated chemical referred to USEPA
25637–99–4	Cyclododecane, hexabromo- (HBCD)	Included in OECD Risk Assessment of brominated flame retardants and specific isomer of HBCD previously designated in ITC's 25th Report (Ref. 12)
29512–49–0	Spiro[isobenzofuran-1(3H),9'-[9H]xanthen]-3-one, 6'-(diethylamino)-3'-methyl-2'-(phenylamino)-	Not domestically produced or imported
31148–95–5	1-Phenanthrenecarbonitrile, 1,2,3,4,4a,9,10,10a-octahydro-1,4a-dimethyl-7-(1-methylethyl)-, (1R,4aS,10aR)-	Low exposure potential from use
40567–16–6	Butanoyl chloride, 2-[2,4-bis(1,1-dimethylpropyl)phenoxy]-	Low exposure potential from use
41556–26–7	Decanedioic acid, bis(1,2,2,6,6-pentamethyl-4-piperidinyl) ester	Low measured BCF
50598–28–2	1-Hexanesulfonamide, N-[3-(dimethylamino)propyl]-1,1,2,2,3,3,4,4,5,5,6,6,6-tridecafluoro-	Perfluorinated chemical referred to USEPA
51461–11–1	Butanamide, N-(3-amino-4-chlorophenyl)-4-[2,4-bis(1,1-dimethylpropyl)phenoxy]-	Not domestically produced or imported
51772–35–1	1-Naphthalenamine, N-[(1,1,3,3-tetramethylbutyl)phenyl]-	Low exposure potential from use
58798–47–3	3H-Indolium, 2-[[(4-methoxyphenyl)methylhydrazono]methyl]-1,3,3-trimethyl-, acetate	Not domestically produced or imported
64022–61–3	1,2,3,4-Butanetetracarboxylic acid, tetrakis(2,2,6,6-tetramethyl-4-piperidinyl) ester	Low exposure potential from use
67584–57–0	2-Propenoic acid, 2-[methyl[(tridecafluorohexyl)sulfonyl]amino]ethyl ester	Perfluorinated chemical referred to USEPA
68259–36–9	1-Naphthalenamine, N-phenyl-ar-(1,1,3,3-tetramethylbutyl)-	Low measured BCF
68555–73–7	1-Heptanesulfonamide, N-ethyl-1,1,2,2,3,3,4,4,5,5,6,6,7,7,7-pentadecafluoro-N-(2-hydroxyethyl)-	Perfluorinated chemical referred to USEPA
68555–76–0	1-Heptanesulfonamide, 1,1,2,2,3,3,4,4,5,5,6,6,7,7,7-pentadecafluoro-N-(2-hydroxyethyl)-N-methyl-	Perfluorinated chemical referred to USEPA
72869–85–3	Chromate(1-), bis[3,5-bis(1,1-dimethylethyl)-2-(hydroxy-.kappa.O)benzoato(2-)-.kappa.O]-, hydrogen, (T-4)-	Low exposure potential from use

TABLE 3.—RATIONALES FOR DEFERRING 30 DEBITS 2 CHEMICALS—Continued

CAS No.	Chemical name	Rationale
75627–12–2	Xanthylium, 3,6-bis(ethylamino)-9-[2-(methoxycarbonyl)phenyl]-2,7-dimethyl-, molybdatesilicate	Potential low bioavailability
106246–33–7	Benzenamine, 4,4'-methylenebis[3-chloro-2,6-diethyl-	Low exposure potential from use

IV. Revisions to the TSCA Section 4(e) Priority Testing List

A. Chemicals Added to the Priority Testing List: Vanadium Compounds

1. *Recommendation*. Forty-three vanadium compounds are being added to the *Priority Testing List* to obtain importation, production, use, exposure, and health effects information to meet U.S. Government data needs (Table 4 of this unit). These compounds were identified by searching reference sources and chemical databases maintained by agencies in the United States and Canada. The ITC believes the list of vanadium compounds in Table 4 of this unit includes those most likely to be in current use. Toxicological effects of vanadium compounds were recently summarized by the International Program on Chemical Safety under the auspices of the World Health Organization (WHO) (Ref. 13).

TABLE 4.—VANADIUM COMPOUNDS BEING ADDED TO THE PRIORITY TESTING LIST

CAS No.	Vanadium compounds
1314–34–7	Vanadium oxide (V2O3) [Vanadium trioxide]
1314–62–1	Vanadium oxide (V2O5) [Vanadium pentoxide]
1686–22–2	Vanadium, triethoxyoxo-, (T-4)- [Triethyl orthovanadate]
3153–26–2	Vanadium, oxobis (2,4-pentanedionato-.kappa.O,.kappa.O')-, (SP-5-21)-
5588–84–1	Vanadium, oxotris(2-propanolato)-, (T-4)- [Vanadium triisopropoxide oxide]
7440–62–2	Vanadium
7632–51–1	Vanadium chloride (VCl4), (T-4)- [Vanadium tetrachloride]
7718–98–1	Vanadium chloride (VCl3) [Vanadium trichloride]
7727–18–6	Vanadium, trichlorooxo-, (T-4)- [Vanadium oxytrichloride]
7803–55–6	Vanadate (VO31-), ammonium [Ammonium metavanadate]
10049–16–8	Vanadium fluoride (VF4) [Vanadium tetrafluoride]
10213–09–9	Vanadium, dichlorooxo- [Vanadyl dichloride]
10580–52–6	Vanadium chloride (VCl2) [Vanadium dichloride]
11099–11–9	Vanadium oxide [Polyvanadic acid]
11115–67–6	Ammonium vanadium oxide
11130–21–5	Vanadium carbide
12007–37–3	Vanadium boride (VB2)
12035–98–2	Vanadium oxide (VO)
12036–21–4	Vanadium oxide (VO2)
12070–10–9	Vanadium carbide (VC)
12083–48–6	Vanadium, dichlorobis (.eta.5-2,4-cyclopentadien-1-yl)-
12166–27–7	Vanadium sulfide (VS)
12439–96–2	Vanadium, oxo[sulfato(2-)-kappa.O]-, pentahydrate [Vanadyl sulfate (VOSO4), pentahydrate]
12604–58–9	Vanadium alloy, base, V,C,Fe (Ferrovanadium)
13470–26–3	Vanadium bromide (VBr3)
13476–99–8	Vanadium, tris(2,4-pentanedionato-.kappa.O,.kappa.O')-, (OC-6-11)- [Vanadium tris(acetylacetonate)]

TABLE 4.—VANADIUM COMPOUNDS BEING ADDED TO THE PRIORITY TESTING LIST—Continued

CAS No.	Vanadium compounds
13497–94–4	Silver vanadium oxide (AgVO3)
13517–26–5	Sodium vanadium oxide (Na4V2O7) [Sodium pyrovanadate]
13718–26–8	Vanadate (VO31-), sodium [Sodium metavanadate]
13721–39–6	Sodium vanadium oxide (Na3VO4) [Sodium orthovanadate]
13769–43–2	Vanadate (VO31-), potassium [Potassium metavanadate]
13930–88–6	Vanadium, oxo[29H,31H-phthalocyaninato(2-)-.kappa.N29,.kappa.N30,.kappa.N31,.kappa.N32]-, (SP-5-12)-
14059–33–7	Bismuth vanadium oxide (BiVO4)
19120–62–8	Vanadium, tris(2-methyl-1-propanolato)oxo-, (T-4)- [Isobutyl orthovanadate]
24646–85–3	Vanadium nitride (VN)
27774–13–6	Vanadium, oxo[sulfato(2-)-.kappa.O]- [Vanadyl sulfate]
30486–37–4	Vanadium hydroxide oxide (V(OH)2O)
39455–80–6	Ammonium sodium vanadium oxide
53801–77–7	Bismuth vanadium oxide
65232–89–5	Vanadium hydroxide oxide phosphate
68130–18–7	Vanadium hydroxide oxide phosphate (V6(OH)3O3(PO4)7)
68815–09–8	Naphthenic acids, vanadium salts
68990–29–4	Balsams, copaiba, sulfurized, vanadium salts

2. *Rationale for recommendation.* Long-term inhalation exposure to vanadium pentoxide increased the incidence of lung tumors in male and female mice. As a result, vanadium pentoxide and other vanadium compounds may be potentially carcinogenic to humans. Existing occupational exposure limits for vanadium dusts were primarily developed to protect workers from irritation and acute pulmonary effects and may not be sufficiently protective against an increased risk of lung cancer.

3. *Information needs.* The ITC needs:

i. Recent non-CBI estimates of annual production or importation volume data and trends, and use information, including percentages of production or importation that are associated with different uses.

ii. Estimates of the number of humans and concentrations of vanadium chemicals to which humans may be exposed in each relevant manufacturing or processing scenario.

iii. Health effects data including pharmacokinetics, genotoxicity, subchronic toxicity, reproductive and developmental toxicity, and any human data from occupationally exposed workers. The ITC seeks this information in order to adequately assess the extent and degree of exposure and potential hazard associated with the various forms of vanadium.

4. *Supporting information.* Vanadium is widely distributed in low amounts as a constituent of mineral ores and crude petroleum deposits. The U.S. consumption of vanadium compounds was reported to be 3,210 metric tons in 2001 (Ref. 14). The majority of vanadium was utilized as an alloying agent in the steel industry or in the production of ferrovanadium and other metal alloys. A smaller portion of vanadium was used as industrial catalysts and in the production of pesticides, dyes, inks, and pigments. More recent applications of vanadium compounds are thought to include manufacture of semiconductors, vanadate glasses, and electro-optical switches. There were over 5,000 potentially exposed workers reported in the National Occupational Exposure Survey conducted between 1980 and 1983. Vanadium exposure has been found in over 300 personal air samples reported in OSHA's Integrated Management Information System since 1995. Worker exposures are known to occur during manufacture and handling of vanadium containing materials, such as welding operations or during cleaning of oil-fired furnaces and boilers. General population exposure to vanadium most likely occurs through ingestion of food-bearing soil residue and inhaled air in areas with high levels of residual fuel oil consumption (Ref. 15).

For vanadium pentoxide and most vanadium dusts and fumes, NIOSH's Recommended Exposure Limit (REL) is a ceiling value of 0.05 milligram/meter cubed (mg/m^3). The American Council of Government Industrial Hygienists (ACGIH) threshold limit value (TLV) for vanadium pentoxide is 0.05 mg/m^3 as an 8–hour time weighted average. OSHA's Permissible Exposure Limit (PEL) is a 0.1 mg/m^3 ceiling for vanadium pentoxide fumes and a 0.5 mg/m^3 ceiling for respirable dust. These occupational exposure limits were developed to protect against respiratory tract irritation and acute pulmonary effects and may not be adequate against an increased risk of lung cancer.

In a 2-year inhalation study, NTP found clear evidence of carcinogenic activity of vanadium pentoxide (CAS No. 1314–62–1) in male and female

B6C3F1 mice (http://ntp-server.niehs.nih.gov/htdocs/LT-studies/tr507.html). The incidence of benign and malignant neoplasms was increased in the lungs of the experimental animals at doses of 1, 2, and 4 mg/m^3. There was also some lesser evidence of increased lung tumor incidence in male and female rats at similar exposure levels. Exposures to vanadium pentoxide caused a spectrum of nonneoplastic lesions in the respiratory tracts of rats and mice, including epithelial hyperplasia, inflammation and fibrosis. The NTP report raises concerns for other vanadium chemicals and their potential health effects.

B. Chemicals Removed From the Priority Testing List

1. *Thiophenol*. Thiophenol (CAS No. 108–98–5) was designated in the ITC's 28thReport (Ref. 16) because there was a low confidence in the Reference Dose (RfD) and no Reference Concentration (RfC). The USEPA's RfC/RfD Workgroup requested that the ITC review health effects data for thiophenol and recommend health effects testing that would increase the confidence in the RfD and provide a RfC. Since thiophenol was designated, the ITC has learned that it is not currently produced in the United States, that the NTP has conducted developmental toxicity (Refs. 17 and 18) and reproductive effects (Ref. 19) studies, and that Japan is developing a SIDS dossier. Thiophenol is being removed from the *Priority Testing List* because it is no longer produced and the ITC anticipates the SIDS dossier will address the testing data needs recommended by the ITC.

2. *Seven alkylphenols and alkylphenol ethoxylates*. The ITC is continuing to review data on the alkylphenols and alkylphenol ethoxylates that were recommended in ITC Reports 37 (Ref. 20), 39 (Ref. 21), and 41 (Ref. 9). For these chemicals the ITC has reviewed the PAIR reports submitted by producers and voluntary information provided by the Alkylphenol & Ethoxylates Research Council (APERC). At this time the ITC is removing from the *Priority Testing List* 4 alkylphenols from the 37th Report (Ref. 20) 1 nonylphenol ethoxylate from the 39th Report (Ref. 21) and 2 alkylphenols from the 41st Report (Ref. 9) (Table 5 of this unit).

TABLE 5.—ALKYLPHENOLS AND ALKYLPHENOL ETHOXYLATES BEING REMOVED FROM THE PRIORITY TESTING LIST

ITC Report	CAS No.	Chemical name	Rationale for removal
37	80–46–6	Phenol, 4-(1,1-dimethylpropyl)-	Sponsored in HPV Challenge Program
37	88–18–6	Phenol, 2-(1,1-dimethylethyl)-	Sponsored in HPV Challenge Program
37	1806–26–4	Phenol, 4-octyl-	No longer used by APERC Members
37	25154–52–3	Phenol, nonyl-	Not commercially available
39	27986–36–3	Ethanol, 2-(nonylphenoxy)-	[1]
41	1987–50–4	Phenol, 4-heptyl-	[2]
41	72624–02–3	Phenol, heptyl derivs.	Sponsored in HPV Challenge Program

[1] Ethanol, 2-(nonylphenoxy)- (CAS No. 27986–36–3) is likely to be degraded in the environment to branched 4-nonylphenol (CAS No. 84852–15–3); data developed from testing branched 4-nonylphenol (CAS No. 84852–15–3) in response to the HPV Challenge Program may be used to predict toxicity of 2-(nonylphenoxy)ethanol.

[2] The ITC learned that there is only a single product being sold and purchased as heptylphenol (phenol, heptyl derivs., CAS No. 72624–02–3). CAS No. 1987–50–4 for Phenol, 4-heptyl- denotes a linear structure of the C7 chain and was previously used and reported on the IUR though it is not the most appropriate CAS number for the commercial heptylphenol product.

There are 2 alkylphenols from the 37th Report (Ref. 20) and 1 alkylphenol from the 41st Report (Ref. 9) remaining on the *Priority Testing List* (Table 6 of this unit).

TABLE 6.—ALKYLPHENOLS REMAINING ON THE PRIORITY TESTING LIST

ITC Report	CAS No.	Chemical name
37	98–54–4	Phenol, 4-(1,1-dimethylethyl)-
37	84852–15–3	Phenol, 4-nonyl-, branched
41	140–66–9	Phenol, 4-(1,1,3,3-tetramethylbutyl)-

For phenol, 4-(1,1-dimethylethyl)- (CAS No. 98–54–4), the ITC anticipates reviewing the SIDS dossier and the ongoing reproductive effects study. For phenol, 4-(1,1,3,3-tetramethylbutyl)- (CAS No. 140–66–9) and phenol, 4-nonyl-, branched (CAS No. 84852–15–3), the ITC anticipates receiving amphibian toxicity data, avian reproductive effects data, and fish reproductive effects data.

3. *DEBITS 1 chemical*. 3H-Pyrazol-3-one, 5-((2-chloro-5- nitrophenyl)amino)-2,4-dihydro-2-(2,4,6-trichlorophenyl)- is being removed from the *Priority Testing List* because of decreasing production volume trends from 1990 to the present. Phenol, 4,4'-[2,2,2-trifluoro-1-(trifluoromethyl)ethylidene]bis- is being removed from the *Priority Testing List* because the ITC has learned that the predicted BCF of approximately 500 is not sufficient to be considered by USEPA's PBT Program. Pentachlorothiophenol (CAS No. 133–49–3) is being removed from the *Priority Testing List* because of low exposure potential from current use.

4. *Indium compounds*. Twenty-eight indium compounds are being removed from the *Priority Testing List* because no production or importation data were submitted to USEPA in response to the July 26, 2001, PAIR rule (Ref. 8) (Table 7 of this unit).

TABLE 7.—INDIUM COMPOUNDS BEING REMOVED FROM THE PRIORITY TESTING LIST

CAS No.	Chemical name
923–34–2	Indium, triethyl-
1303–11–3	Indium arsenide (InAs)
1312–41–0	Antimony, compd. with indium (1:1)
1312–45–4	Indium telluride (In2Te3)
4194–69–8	1,2,3-Propanetricarboxylic acid, 2-hydroxy-, indium(3+) salt
7783–52–0	Indium fluoride (InF3)
12018–95–0	Copper indium selenide (CuInSe2)
12030–14–7	Indium sulfide (InS)
12030–24–9	Indium sulfide (In2S3)
12056–07–4	Indium selenide (In2Se3)
12672–70–7	Indium chloride
12672–71–8	Indium oxide
13510–35–5	Indium iodide (InI3)
13770–61–1	Nitric acid, indium(3+) salt
13966–94–4	Indium iodide (InI)
14166–78–0	Indium fluoride (InF3), trihydrate
14280–53–6	Indium bromide (InBr)
14405–45–9	Indium, tris(2,4-pentanedionato-.kappa.O,.kappa.O')-, (OC-6-11)-
25617–98–5	Indium nitride (InN)
55326–87–9	Indium hydroxide
71243–84–0	Indium tin oxide (In1.69Sn0.15O2.85)
13465–09–3	Indium bromide (InBr3)
13465–10–6	Indium chloride (InCl)
13709–93–8	Boric acid (H3BO3), indium(3+) salt (1:1)
27765–48–6	Borate(1-), tetrafluoro-, indium(3+) (3:1)
66027–94–9	Indium, hydroxybis(trifluoroacetato-.kappa.O)-
67816–06–2	Hexanoic acid, 2-ethyl-, indium(3+) salt
68310–35–0	Neodecanoic acid, indium(3+) salt

With these actions, there are nine indium compounds remaining on the *Priority Testing List* (Table 8 of this unit). Indium phosphide remains on the *Priority Testing List* due to carcinogenicity concerns based on experimental animal studies (Ref. 22). The other eight indium compounds remain on the *Priority Testing List* because PAIR reports were submitted for these chemicals and the ITC needs health effects data (see section II.E. of this report).

TABLE 8.—INDIUM COMPOUNDS REMAINING ON THE PRIORITY TESTING LIST

CAS No.	Chemical name
1312–43–2	Indium oxide (In2O3)

TABLE 8.—INDIUM COMPOUNDS REMAINING ON THE PRIORITY TESTING LIST—Continued

CAS No.	Chemical name
7440–74–6	Indium
10025–82–8	Indium chloride (InCl3)
13464–82–9	Sulfuric acid, indium(3+) salt (3:2)
20661–21–6	Indium hydroxide (In(OH)3)
25114–58–3	Acetic acid, indium(3+) salt
22398–80–7	Indium phosphide (InP)
17906–67–7	Indium tin oxide
66027–93–8	Sulfamic acid, indium(3+) salt

V. References

1. USEPA. 1998. Revisions to Reporting Regulations Under TSCA Section 8(d) (63 FR 15765, April 1, 1998) (FRL–5750–4). Available online at: http://www.epa.gov/fedrgstr/.

2. ITC. 2001. Forty-Eighth Report of the ITC. **Federal Register** (66 FR 51276, October 5, 2001) (FRL–6786–7). Available online at: http://www.epa.gov/fedrgstr/.

3. ITC. 2001. Forty-Ninth Report of the ITC. **Federal Register** (67 FR 10298, March 6, 2002) (FRL–6820–8). Available online at: http://www.epa.gov/fedrgstr/.

4. ITC. 2001. Fiftieth Report of the ITC. **Federal Register** (67 FR 49530, July 30, 2002) (FRL–7183–7). Available online at: http://www.epa.gov/fedrgstr/.

5. ITC. 1998. Forty-Second Report of the ITC. **Federal Register** (63 FR 42554, August 7, 1998) (FRL–5797–8). Available online at: http://www.epa.gov/fedrgstr/.

6. ITC. 2001. Forty-Seven Report of the ITC. **Federal Register** (66 FR 17768 April 3, 2001) (FRL–6763–6). Available online at: http://www.epa.gov/fedrgstr/.

7. ITC. 2000. Forty-Sixth Report of the ITC. **Federal Register** (65 FR 75552 December 1, 2000) (FRL–6594–7). Available online at: http://www.epa.gov/fedrgstr/.

8. USEPA. 2001. Preliminary Assessment Information Reporting; Addition of Certain Chemicals (66 FR 38955, July 26, 2001) (FRL–6783–6). Available online at: http://www.epa.gov/fedrgstr/.

9. ITC. 1998. Forty-First Report of the ITC. **Federal Register** (63 FR 17658, April 9, 1998) (FRL–5773–5). Available online at: http://www.epa.gov/fedrgstr/.

10. ACC. 2002. Comments on 50th TSCA Interagency Testing Committee Report. Docket ID Number OPPT–2002–0026 (67 FR 45929, July 30, 2002). September 13, 2002 letter from the American Chemistry Council, Arlington, VA.

11. ITC. 2000. Forty-Fifth Report of the ITC. **Federal Register** (65 FR 75544, December 1, 2000) (FRL–6399–5). Available online at: http://www.epa.gov/fedrgstr/.

12. ITC. 1989. Twenty-Fifth Report of the ITC, Receipt of Report and Request for Comments Regarding Priority Testing List of Chemicals. **Federal Register** (54 FR 51114, December 12, 1989). Available online at: http://www.epa.gov/fedrgstr/EPA-TOX/pre1994/hisindex.htm#Toxic Substances Control Act (TSCA) Interagency Testing Committee (ITC) Reports.

13. WHO. 2001. Vanadium Pentoxide and Other Inorganic Vanadium Compounds. Concise International Chemical Assessment Document 29. World Health Organization, Geneva, Switzerland. Available online at: http://www.inchem.org/documents/cicads/cicad29.htm.

14. Reese, Robert G., Jr. 2001. Vanadium. *The Mineral Yearbook—Minerals and Metals*. Available online at: (http://minerals.usgs.gov/minerals/pubs/commodity/vanadium/700401.pdf).

15. ATSDR. 1992. Toxicological Profile of Vanadium. Available online at: http://www.atsdr.cdc.gov/toxprofiles/tp58.html.

16. ITC. 1991. Twenty-Eighth Report of the ITC, Receipt of Report and Request for Comments Regarding *Priority List* of Chemicals. **Federal Register** (56 FR 41212, August 19, 1991). Available online at: http://www.epa.gov/fedrgstr/EPA-TOX/pre1994/hisindex.htm#Toxic Substances Control Act (TSCA) Interagency Testing Committee (ITC) Reports.

17. NTP. 1994. Developmental Toxicity of Thiophenol (CAS No. 108–98–5) in Sprague-Dawley (CD®) Rats. NTIS# PB94–155009. Available online at: http://ntp-server.niehs.nih.gov/htdocs/TT-studies/TER92133.html.

18. NTP. 1994. Developmental Toxicity of Thiophenol (CAS No. 108–98–5) in New Zealand White Rabbits. NTIS# PB94–201183 . Available online at: http://ntp-server.niehs.nih.gov/htdocs/TT-studies/TER92134.html.

19. NTP. 1996. Reproductive Toxicity of Thiophenol II (CAS No: 108–98–5) Administered by Gavage to Sprague-Dawley Rats. National Toxicology Program. NTIS# PB96–211735. Available online at: http://ntp-server.niehs.nih.gov/htdocs/RT-studies/RACB94001.html.

20. ITC. 1996. Thirty-Seventh Report of the ITC. **Federal Register** (61 FR 4188, February 2, 1996) (FRL–4991–6). Available online at: http://www.epa.gov/fedrgstr/.

21. ITC. 1997. Thirty-Ninth Report of the ITC. **Federal Register** (62 FR 8578, February 25, 1997) (FRL–5580–9). Available online at: http://www.epa.gov/fedrgstr/.

22. NTP. 2001. Toxicology and carcinogenesis studies of indium phosphide (CAS No. 22398–80–7) in F344/Nrats and B6C3F1 mice (inhalation studies). National Toxicology Program Technical Report. 2001 July; 499:1–4433 (http://ehp.niehs.nih.gov/ntp/members/tr499/tr499-full.pdf).

VI. TSCA Interagency Testing Committee

Statutory Organizations and Their Representatives

Council on Environmental Quality
Vacant

Department of Commerce

National Institute of Standards and Technology
Robert Huie, Member

Barbara C. Levin, Alternate

National Oceanographic and Atmospheric Administration
Thomas P. O'Connor, Member
Teri Rowles, Alternate

Environmental Protection Agency
Gerry Brown, Member
Paul Campanella, Alternate

National Cancer Institute
Alan Poland, Member
David Longfellow, Alternate

National Institute of Environmental Health Sciences
Scott Masten, Member, Chair
William Eastin, Alternate

National Institute for Occupational Safety and Health
Mark Toraason, Member, Vice Chair
Dennis W. Lynch, Alternate

National Science Foundation
Marge Cavanaugh, Member

Occupational Safety and Health Administration
Val H. Schaeffer, Member
Lyn Penniman, Alternate

Liaison Organizations and Their Representatives

Agency for Toxic Substances and Disease Registry
William Cibulas, Member
Daphne Moffett, Alternate

Consumer Product Safety Commission
Treye Thomas, Member
Jacqueline Ferrante, Alternate

Department of Agriculture
Clifford P. Rice, Member
Laurau L. McConnell, Alternate

Department of Defense
Barbara Larcom, Member
Kenneth Still, Alternate
José Centeno, Alternate

Department of the Interior
Barnett A. Rattner, Member

Food and Drug Administration
David Hatten, Member

National Library of Medicine
Vera W. Hudson, Member

National Toxicology Program
NIEHS, FDA, and NIOSH Members

Technical Support Contractor
Syracuse Research Corporation

ITC Staff
John D. Walker, Director
Norma S. L. Williams, Executive Assistant

TSCA Interagency Testing Committee, Office of Pollution Prevention and Toxics (7401M), Environmental Protection Agency, 1200 Pennsylvania Ave., NW., Washington, DC 20460–0001; telephone number: (202) 564–7527; fax number: (202) 564–7528; e-mail address: williams.norma@epa.gov; url: http://www.epa.gov/opptintr/itc.

[FR Doc. 03–4522 Filed 2–25–03; 8:45 am]
BILLING CODE 6560–50–S

Reader Aids

Federal Register

Vol. 68, No. 38

Wednesday, February 26, 2003

CUSTOMER SERVICE AND INFORMATION

Federal Register/Code of Federal Regulations	
General Information, indexes and other finding aids	**202–741–6000**
Laws	**741–6000**
Presidential Documents	
Executive orders and proclamations	**741–6000**
The United States Government Manual	**741–6000**
Other Services	
Electronic and on-line services (voice)	**741–6020**
Privacy Act Compilation	**741–6064**
Public Laws Update Service (numbers, dates, etc.)	**741–6043**
TTY for the deaf-and-hard-of-hearing	**741–6086**

ELECTRONIC RESEARCH

World Wide Web

Full text of the daily Federal Register, CFR and other publications is located at: **http://www.access.gpo.gov/nara**

Federal Register information and research tools, including Public Inspection List, indexes, and links to GPO Access are located at: **http://www.archives.gov/federal__register/**

E-mail

FEDREGTOC-L (Federal Register Table of Contents LISTSERV) is an open e-mail service that provides subscribers with a digital form of the Federal Register Table of Contents. The digital form of the Federal Register Table of Contents includes HTML and PDF links to the full text of each document.

To join or leave, go to **http://listserv.access.gpo.gov** and select *Online mailing list archives, FEDREGTOC-L, Join or leave the list (or change settings);* then follow the instructions.

PENS (Public Law Electronic Notification Service) is an e-mail service that notifies subscribers of recently enacted laws.

To subscribe, go to **http://listserv.gsa.gov/archives/publaws-l.html** and select *Join or leave the list* (or change settings); then follow the instructions.

FEDREGTOC-L and **PENS** are mailing lists only. We cannot respond to specific inquiries.

Reference questions. Send questions and comments about the Federal Register system to: **info@fedreg.nara.gov**

The Federal Register staff cannot interpret specific documents or regulations.

FEDERAL REGISTER PAGES AND DATE, FEBRUARY

5203–5528 3
5529–5784 4
5785–6060 5
6061–6338 6
6339–6602 7
6603–6814 10
6815–7062 11
7063–7300 12
7301–7410 13
7411–7692 14
7693–7896 18
7897–8152 19
8153–8444 20
8445–8538 21
8539–8702 24
8703–8816 25
8817–8988 26

CFR PARTS AFFECTED DURING FEBRUARY

At the end of each month, the Office of the Federal Register publishes separately a List of CFR Sections Affected (LSA), which lists parts and sections affected by documents published since the revision date of each title.

3 CFR

Proclamations:
7644 6055
7645 6057
7646 6059
7647 7053
Executive Orders:
13285 5203
Presidential Determinations:
No. 2003-13 of January 29, 2003 5785
No. 2003-14 of January 30, 2003 5787

5 CFR

576 5529
875 5530
890 5470
Proposed Rules:
890 6649
2637 7844
2641 7844

7 CFR

1 6339
15f 7411
301 .....5793, 5794, 6603, 8817
318 .....5796, 5800
319 6544
330 6341
354 6341
762 7693
764 7693
774 7693
1000 7063
1001 7063
1005 7063
1006 7063
1007 7063
1030 7063
1032 .....7063, 7070
1033 7063
1124 7063
1126 7063
1131 7063
1135 7063
1413 5205
1755 7897
1910 7693
1924 7693
1941 7693
1943 7693
1951 7693
1955 7693
1956 7693
1962 7693
1965 7693
Proposed Rules:
319 6352
360 6653
1466 6655
1470 7720

9 CFR

4 6341
11 6341
12 6341
49 6341
50 6341
51 6341
52 6341
53 6341
54 6341
70 6341
71 6341
72 6341
73 6341
74 6341
75 6341
77 6341
78 6341
79 6341
80 6341
82 7412
85 6341
89 6341
91 6341
92 6341
93 .....6341, 7414
94 .....5802, 6341
95 6341
96 6341
97 6341
98 6341
99 6341
122 6341
123 6341
124 6341
130 6341
145 6341
147 6341
160 6341
161 6341
162 6341
166 .....6341, 7415
Proposed Rules:
94 .....6673, 7722
391 8858
590 8858
592 8858

10 CFR

72 8445
Proposed Rules:
72 8472

11 CFR

110 6346
Proposed Rules:
100 7728
110 7728

12 CFR

211 7898
272 6061

303 7301
1750 7309
1805 5704
1806 5717
Proposed Rules:
3 6363
5 6363
6 6363
7 6363
9 6363
28 6363
34 6363
609 5595
611 5587
612 5587
614 ....5587, 5595
615 5595
617 ....5587, 5595
709 8860

13 CFR

Proposed Rules:
120 5234
121 5234

14 CFR

23 5538
25 5208
39 ....5541, 5805, 5808, 5810, 5812, 5815, 5818, 5819, 5822, 6347, 6815, 7652, 7900, 7902, 7904, 7908, 7910, 7911, 8539
71 ....6606, 6607, 7652, 7913, 7914, 7915, 7916, 8703, 8704, 8705, 8706
73 7917
91 7684
95 7918
97 ....6816, 6818, 8707, 8709
119 5782
121 5782
129 5782
135 5782
150 6608
183 5782
Proposed Rules:
1 6802
39 ....5610, 5856, 6376, 6379, 6380, 6382, 6383, 7081, 7084, 7449, 7451, 7947, 8155, 8157, 8161, 8473, 8475, 8477, 8555, 8558, 8560, 8563, 8564, 8566, 8862, 8865
71 ....5613, 6677, 7949
91 6802
121 6802
125 ....5488, 6802
135 ....5488, 6802
255 7325

15 CFR

2016 5542

16 CFR

1512 7072
305 8448

17 CFR

1 5545
30 5545
190 5545
205 6296
210 6006
228 5982
229 5982
239 6564
240 ....5348, 6006, 8686
249 ....5348, 5982, 6006, 6564
270 ....5348, 6564, 8438
274 ....5348, 6006, 6564
275 6585
Proposed Rules:
201 8138
205 6324
240 6324
249 6324
270 7038
275 7038

18 CFR

157 8710
375 6608
390 7416

19 CFR

102 8711
141 8713
142 8713

20 CFR

260 6820
320 6820
404 5210
416 5210

21 CFR

58 6609
73 7416
201 6062
349 7919
522 8153
529 5562
558 6820
866 5825
Proposed Rules:
1 ....5378, 5428
101 8163
349 7951
1301 7728

22 CFR

120 7417
123 6609
Proposed Rules:
307 5857

23 CFR

450 7418
636 7921
Proposed Rules:
1225 6091

24 CFR

234 6396
Proposed Rules:
902 6262
3500 6385

26 CFR

1 ....5346, 6081, 6350
157 7922
602 7922
Proposed Rules:
1 ....7453, 7454, 8868
41 7454
48 7454
145 7454
157 7956
602 7956

27 CFR

Proposed Rules:
55 ....7410, 8331

28 CFR

65 8820
105 7313
522 5563

29 CFR

4022 7419
4044 7419
Proposed Rules:
403 8727
408 8727
4000 7454
4003 7454
4007 7454
4010 7454
4011 7454
4022 7454
4041 7454
4041a 7454
4043 7454
4050 7454
4062 7454
4203 7454
4204 7454
4207 7454
4208 7454
4211 7454
4219 7454
4220 7454
4221 7454
4231 7454
4245 7454
4281 7454
4901 7454
4902 7454
4903 7454
4907 7454

30 CFR

100 6609
250 ....7421, 8402
Proposed Rules:
206 ....7085, 7086
250 8480
917 6838
934 6842

31 CFR

103 6613
321 7427
351 7427
352 7427
353 7427
359 7427
360 7427
501 6820
Proposed Rules:
103 ....8480, 8568, 8571

32 CFR

171 8822
199 6617
254 6082
285 8825
311 8721
706 ....5827, 5828, 5829, 5830, 5831
Proposed Rules:
322 8179

33 CFR

117 ....5832, 6621, 7427
165 ....5833, 7073, 7075, 7078, 7701, 7926
Proposed Rules:
117 ....5858, 6100, 7087
165 ....5614, 6844, 7093, 7471, 7473, 7958, 7960
179 7096
181 7096
183 7096
385 5860

34 CFR

34 8142

36 CFR

242 ....7276, 7298, 7703
404 8825
Proposed Rules:
242 ....7294, 7734

37 CFR

Proposed Rules:
201 6678

38 CFR

14 8541
19 6621
36 6625
60 8547
Proposed Rules:
3 ....6679, 6998
4 6998

40 CFR

9 7176
52 ....5221, 5228, 6627, 6629, 7174, 7321, 7428, 7704, 8550, 8723, 8830, 8835, 8838, 8839, 8841, 8845
61 6082
62 ....6630, 6633
63 ....6635, 7706
81 ....7174, 7410, 8185
122 7176
123 7176
180 ....5835, 5839, 5847, 7428, 7931, 7935, 8847
261 8553
412 7176
Proposed Rules:
52 ....5246, 5263, 6681, 7327, 7330, 7476, 8574, 8727, 8868, 8869, 8871
60 8574
62 ....6681, 6682
63 7735
180 7097

41 CFR

109–6 7940
Ch. 302 7941

42 CFR

405 6636
419 6636
Proposed Rules:
413 6682

44 CFR

64 5852
65 ....6644, 6823, 6826
67 ....6828, 6830
Proposed Rules:
61 5264
67 ....6847, 6861

45 CFR

160 8334
162 ....8334, 8381
164 8334
1602 7433
1611 ....7718, 8856

46 CFR

356 5564

Proposed Rules:

401 7489

47 CFR

32 6351
52 7323
53 6351
54 ....6646, 6832
64 ....6351, 6352, 8553
73 ....5583, 5584, 5854, 5855, 6082, 7944, 8724, 8725

Proposed Rules:

0 6689
43 6689
63 6689
64 6689
73 ....5616, 5617, 5860, 5861, 5862, 7737, 7961, 7962, 7963, 7964, 8486, 8728, 8729, 8730
74 7737
76 7737
90 ....6687, 6688, 7737

48 CFR

201 7438
202 7438
204 7438
206 7438
209 7438
212 7438
214 7438
217 7438
219 7438
225 7441
230 7438
231 7438
232 ....7438, 8450
236 7438
237 7443
239 7438
242 7438
249 7438
250 7438
252 ....7441, 8450
253 7438
923 6355
936 6355
970 6355
1804 5230
1827 5230
1835 5230
1852 5230

Proposed Rules:

2 5774
31 5774
52 5778
228 7490
252 7491
532 8486
538 8486
552 8486

49 CFR

390 8580
396 8580
571 6359
1011 8725
1540 7444
1570 6083
1572 6083

Proposed Rules:

173 6689
192 6385
571 ....5863, 7100, 7747
1180 6695

50 CFR

17 8088
100 ....7276, 7298, 7703
222 8456
223 ....7080, 8456
224 8456
622 6360
648 6088
679 ....5585, 6833, 7323, 7448, 7719, 8153, 8154, 8726

Proposed Rules:

17 ....6863, 8487, 8730
20 6697
21 6697
92 6697
100 ....7294, 7734
300 6103
600 ....6863, 7492, 8487, 8871, 8872
648 ....7749, 7965, 8731
679 ....6386, 6865, 7750

REMINDERS

The items in this list were editorially compiled as an aid to Federal Register users. Inclusion or exclusion from this list has no legal significance.

RULES GOING INTO EFFECT FEBRUARY 26, 2003

AMERICAN BATTLE MONUMENTS COMMISSION

Freedom of Information Act and Electronic Freedom of Information Act; implementation; published 2-26-03

COMMERCE DEPARTMENT

Economic Analysis Bureau

International services surveys:

BE-605, etc.; transactions of U.S. affiliate, except U.S. banking affiliate, with foreign parent, and transactions of U.S. affiliate with foreign parent; published 1-27-03

ENVIRONMENTAL PROTECTION AGENCY

Air quality implementation plans; approval and promulgation; various States:

California; published 2-26-03

FEDERAL ELECTION COMMISSION

Bipartisan Campaign Reform Act; implementation:

Candidates opposing self-financed candidates; increased contribution and coordinated party expenditure limits; published 1-27-03

JUSTICE DEPARTMENT

Immigration and Naturalization Service

Emergency Federal law enforcement assistance:

Training waiver or abbreviation; State and local law enforcement officers authorized to enforce immigration law during mass influx of aliens; published 2-26-03

COMMENTS DUE NEXT WEEK

AGRICULTURE DEPARTMENT

Agricultural Marketing Service

Peaches, plums, and nectarines; grade standards; comments due by 3-7-03; published 1-31-03 [FR 03-02250]

AGRICULTURE DEPARTMENT

Forest Service

National Forest System land and resource management planning; comments due by 3-6-03; published 12-6-02 [FR 02-30683]

COMMERCE DEPARTMENT

National Institute of Standards and Technology

National Construction Safety Team Act; implementation; comments due by 3-3-03; published 1-30-03 [FR 03-02084]

DEFENSE DEPARTMENT

Federal Acquisition Regulation (FAR):

Section 508 micro-purchase exception sunset provision; comments due by 3-3-03; published 12-31-02 [FR 02-32743]

DEFENSE DEPARTMENT

Engineers Corps

Water pollution control:

Clean Water Act—

Waters of United States; definition; comments due by 3-3-03; published 1-15-03 [FR 03-00960]

ENVIRONMENTAL PROTECTION AGENCY

Air quality implementation plans:

Preparation, adoption, and submittal—

Prevention of significant deterioration and nonattainment new source review; routine maintenance, repair, and replacement; comments due by 3-3-03; published 12-31-02 [FR 02-31900]

Air quality implementation plans; approval and promulgation; various States; air quality planning purposes; designation of areas:

Missouri and Illinois; comments due by 3-3-03; published 1-30-03 [FR 03-01773]

Air quality implementation plans; approval and promulgation; various States:

California; comments due by 3-3-03; published 1-31-03 [FR 03-02174]

District of Columbia, Maryland, and Virginia; comments due by 3-5-03; published 2-3-03 [FR 03-02333]

Maryland; comments due by 3-5-03; published 2-3-03 [FR 03-02433]

Missouri; comments due by 3-3-03; published 1-30-03 [FR 03-01772]

Pesticides; tolerances in food, animal feeds, and raw agricultural commodities:

Lambda-cyhalothrin; comments due by 3-4-03; published 1-3-03 [FR 03-00006]

S-metolachlor; comments due by 3-4-03; published 1-3-03 [FR 03-00005]

Radiation protection programs:

Transuranic radioactive waste for disposal at Waste Isolation Pilot Plant; waste characterization program documents availability—

Argonne National Laboratory-East Site, NM; comments due by 3-3-03; published 1-31-03 [FR 03-02343]

Water pollution control:

Clean Water Act—

Waters of United States; definition; comments due by 3-3-03; published 1-15-03 [FR 03-00960]

FARM CREDIT ADMINISTRATION

Farm credit system:

Borrower rights; effective interest rates and related loan information; disclosure; comments due by 3-6-03; published 2-4-03 [FR 03-02401]

FEDERAL EMERGENCY MANAGEMENT AGENCY

National Flood Insurance Program:

Increased coverage rates; comments due by 3-5-03; published 2-3-03 [FR 03-02453]

GENERAL SERVICES ADMINISTRATION

Federal Acquisition Regulation (FAR):

Section 508 micro-purchase exception sunset provision; comments due by 3-3-03; published 12-31-02 [FR 02-32743]

HEALTH AND HUMAN SERVICES DEPARTMENT

Centers for Medicare & Medicaid Services

Medicare:

Physician fee schedule (2003 CY); payment policies and relative value unit adjustments; comments due by 3-3-03; published 12-31-02 [FR 02-32503]

HOUSING AND URBAN DEVELOPMENT DEPARTMENT

Grants:

Faith-based organizations; equal treatment with other participants in HUD programs; comments due by 3-7-03; published 1-6-03 [FR 03-00133]

JUSTICE DEPARTMENT

Privacy Act; implementation; comments due by 3-3-03; published 1-31-03 [FR 03-02251]

LIBRARY OF CONGRESS

Copyright Office, Library of Congress

Copyright Arbitration Royalty Panel rules and procedures:

Digital performance of sound recordings by preexisting subscription services; reasonable rates and terms determination; comments due by 3-3-03; published 1-30-03 [FR 03-02081]

NATIONAL AERONAUTICS AND SPACE ADMINISTRATION

Federal Acquisition Regulation (FAR):

Section 508 micro-purchase exception sunset provision; comments due by 3-3-03; published 12-31-02 [FR 02-32743]

PEACE CORPS

Standards of conduct; comments due by 3-7-03; published 2-5-03 [FR 03-02703]

POSTAL SERVICE

Domestic Mail Manual:

Outside-country periodicals co-palletization and drop-ship classification; experimental testing; comments due by 3-3-03; published 1-30-03 [FR 03-02198]

SMALL BUSINESS ADMINISTRATION

Business loans:

Certified Development Company Loan Program; comments due by 3-6-03; published 2-3-03 [FR 03-02399]

TRANSPORTATION DEPARTMENT

Federal Aviation Administration

Air carrier certification and operations:

Transport category airplanes—

Passenger and flight attendant seats; improved crashworthiness; comments due by 3-3-03; published 12-3-02 [FR 02-30695]
Airworthiness directives:
Boeing; comments due by 3-3-03; published 1-2-03 [FR 02-32884]
Bombardier; comments due by 3-3-03; published 1-30-03 [FR 03-02098]
Dassault; comments due by 3-3-03; published 1-30-03 [FR 03-02148]
Empresa Brasileira de Aeronautica S.A. (EMBRAER); comments due by 3-3-03; published 1-30-03 [FR 03-02096]
Eurocopter France; comments due by 3-3-03; published 12-31-02 [FR 02-32889]
Hartzell Propeller, Inc.; comments due by 3-3-03; published 1-2-03 [FR 02-33074]
Raytheon; comments due by 3-3-03; published 1-27-03 [FR 03-01678]
Rolls-Royce Ltd.; comments due by 3-3-03; published 1-2-03 [FR 02-32888]
Airworthiness standards:
Special conditions—
Bombardier Model BD-100-1A10 airplanes; comments due by 3-5-03; published 2-3-03 [FR 03-02422]

LIST OF PUBLIC LAWS

This is a continuing list of public bills from the current session of Congress which have become Federal laws. It may be used in conjunction with ''P L U S'' (Public Laws Update Service) on 202–741–6043. This list is also available online at *http://www.nara.gov/fedreg/plawcurr.html*.

The text of laws is not published in the **Federal Register** but may be ordered in ''slip law'' (individual pamphlet) form from the Superintendent of Documents, U.S. Government Printing Office, Washington, DC 20402 (phone, 202–512–1808). The text will also be made available on the Internet from GPO Access at *http://www.access.gpo.gov/nara/nara005.html*. Some laws may not yet be available.

H.J. Res. 2/P.L. 108–7
Consolidated Appropriations Resolution, 2003 (Feb. 20, 2003; 117 Stat. 11)

Last List February 18, 2003

Public Laws Electronic Notification Service (PENS)

PENS is a free electronic mail notification service of newly enacted public laws. To subscribe, go to *http://listserv.gsa.gov/archives/publaws-l.html*

Note: This service is strictly for E-mail notification of new laws. The text of laws is not available through this service. **PENS** cannot respond to specific inquiries sent to this address.