AUTHENTICATED U.S. GOVERNMENT INFORMATION GPO

Federal Register

5–2–03 Friday
Vol. 68 No. 85 May 2, 2003

Pages 23377–23568

The **FEDERAL REGISTER** is published daily, Monday through Friday, except official holidays, by the Office of the Federal Register, National Archives and Records Administration, Washington, DC 20408, under the Federal Register Act (44 U.S.C. Ch. 15) and the regulations of the Administrative Committee of the Federal Register (1 CFR Ch. I). The Superintendent of Documents, U.S. Government Printing Office, Washington, DC 20402 is the exclusive distributor of the official edition.

The **Federal Register** provides a uniform system for making available to the public regulations and legal notices issued by Federal agencies. These include Presidential proclamations and Executive Orders, Federal agency documents having general applicability and legal effect, documents required to be published by act of Congress, and other Federal agency documents of public interest.

Documents are on file for public inspection in the Office of the Federal Register the day before they are published, unless the issuing agency requests earlier filing. For a list of documents currently on file for public inspection, see http://www.archives.gov/federal__register/.

The seal of the National Archives and Records Administration authenticates the Federal Register as the official serial publication established under the Federal Register Act. Under 44 U.S.C. 1507, the contents of the **Federal Register** shall be judicially noticed.

The **Federal Register** is published in paper and on 24x microfiche. It is also available online at no charge as one of the databases on GPO Access, a service of the U.S. Government Printing Office.

The online edition of the **Federal Register** is issued under the authority of the Administrative Committee of the Federal Register as the official legal equivalent of the paper and microfiche editions (44 U.S.C. 4101 and 1 CFR 5.10). It is updated by 6 a.m. each day the **Federal Register** is published and it includes both text and graphics from Volume 59, Number 1 (January 2, 1994) forward.

GPO Access users can choose to retrieve online **Federal Register** documents as TEXT (ASCII text, graphics omitted), PDF (Adobe Portable Document Format, including full text and all graphics), or SUMMARY (abbreviated text) files. Users should carefully check retrieved material to ensure that documents were properly downloaded.

On the World Wide Web, connect to the **Federal Register** at http://www.access.gpo.gov/nara. Those without World Wide Web access can also connect with a local WAIS client, by Telnet to swais.access.gpo.gov, or by dialing (202) 512–1661 with a computer and modem. When using Telnet or modem, type swais, then log in as guest with no password.

For more information about GPO Access, contact the GPO Access User Support Team by E-mail at gpoaccess@gpo.gov; by fax at (202) 512–1262; or call (202) 512–1530 or 1–888–293–6498 (toll free) between 7 a.m. and 5 p.m. Eastern time, Monday–Friday, except Federal holidays.

The annual subscription price for the **Federal Register** paper edition is $699, or $764 for a combined **Federal Register, Federal Register** Index and List of CFR Sections Affected (LSA) subscription; the microfiche edition of the **Federal Register** including the **Federal Register** Index and LSA is $264. Six month subscriptions are available for one-half the annual rate. The charge for individual copies in paper form is $10.00 for each issue, or $10.00 for each group of pages as actually bound; or $2.00 for each issue in microfiche form. All prices include regular domestic postage and handling. International customers please add 25% for foreign handling. Remit check or money order, made payable to the Superintendent of Documents, or charge to your GPO Deposit Account, VISA, MasterCard or Discover. Mail to: New Orders, Superintendent of Documents, P.O. Box 371954, Pittsburgh, PA 15250–7954.

There are no restrictions on the republication of material appearing in the **Federal Register.**

How To Cite This Publication: Use the volume number and the page number. Example: 68 FR 12345.

SUBSCRIPTIONS AND COPIES

PUBLIC	
Subscriptions:	
Paper or fiche	**202–512–1800**
Assistance with public subscriptions	**202–512–1806**
General online information	**202–512–1530; 1–888–293–6498**
Single copies/back copies:	
Paper or fiche	**202–512–1800**
Assistance with public single copies	**1–866–512–1800 (Toll-Free)**
FEDERAL AGENCIES	
Subscriptions:	
Paper or fiche	**202–741–6005**
Assistance with Federal agency subscriptions	**202–741–6005**

What's NEW!

Federal Register Table of Contents via e-mail

Subscribe to FEDREGTOC, to receive the **Federal Register** Table of Contents in your e-mail every day.

If you get the HTML version, you can click directly to any document in the issue.

To subscribe, go to **http://listserv.access.gpo.gov** and select:

Online mailing list archives
FEDREGTOC-L
Join or leave the list

Then follow the instructions.

Printed on recycled paper.

Contents

Federal Register

Vol. 68, No. 85

Friday, May 2, 2003

Agricultural Marketing Service
RULES
Olives grown in—
California, 23378–23381
Perishable agricultural commodities:
Fresh and frozen fruits and vegetables that are coated or battered, 23377–23378
NOTICES
Pesticides, federally restricted use; certified applicators; recordkeeping requirements; Section 610 review, 23439

Agriculture Department
See Agricultural Marketing Service
See Animal and Plant Health Inspection Service
See Economic Research Service
See Forest Service

Animal and Plant Health Inspection Service
PROPOSED RULES
Noxious weeds:
Kikuyu grass cultivars, 23425

Arts and Humanities, National Foundation
See National Foundation on the Arts and the Humanities

Blind or Severely Disabled, Committee for Purchase From People Who Are
See Committee for Purchase From People Who Are Blind or Severely Disabled

Centers for Medicare & Medicaid Services
NOTICES
Agency information collection activities; proposals, submissions, and approvals, 23466–23467

Civil Rights Commission
NOTICES
Meetings; State advisory committees:
Georgia, 23441–23442
Meetings; Sunshine Act, 23442

Coast Guard
RULES
Drawbridge operations:
Connecticut, 23390
Ports and waterways safety:
Illinois Waterway System; Ninth Coast Guard District; regulated navigation area, 23399–23404
Inland rivers; Eighth Coast Guard District; regulated navigation areas, 23393–23399
Portland, OR—
Large passenger vessels protection; security and safety zones, 23390–23393

Commerce Department
See National Institute of Standards and Technology
See Technology Administration

Committee for Purchase From People Who Are Blind or Severely Disabled
NOTICES
Procurement list; additions and deletions, 23441

Defense Department
See Navy Department

Economic Research Service
NOTICES
Agency information collection activities; proposals, submissions, and approvals, 23439–23440

Education Department
NOTICES
Grants and cooperative agreements; availability, etc.:
Special education and rehabilitative services—
Technical Assistance ALLIANCE for Parents Centers, 23445–23446

Employment and Training Administration
NOTICES
Adjustment assistance:
Power One, 23499
Agency information collection activities; proposals, submissions, and approvals, 23499–23500

Employment Standards Administration
NOTICES
Minimum wages for Federal and federally-assisted construction; general wage determination decisions, 23500–23501

Energy Department
See Federal Energy Regulatory Commission
NOTICES
Grants and cooperative agreements; availability, etc.:
Onboard idle reduction technologies on Class 7 and 8 trucks; cost shared demonstration and information dissemination projects, 23446–23447
Meetings:
Basic Energy Sciences Advisory Committee, 23447
Environmental Management Site-Specific Advisory Board—
Fernald Site, OH, 23448
Idaho National Engineering and Environmental Laboratory, ID, 23447–23448

Environmental Protection Agency
RULES
Air quality implementation plans; approval and promulgation; various States:
Pennsylvania, 23404–23407
Hazardous waste program authorizations:
Virginia; withdrawn, 23407–23408
PROPOSED RULES
Air quality implementation plans; approval and promulgation; various States:
Pennsylvania, 23430–23431
NOTICES
Agency information collection activities; proposals, submissions, and approvals, 23454–23457
Air pollution control:
Citizens suits; proposed settlements—
Our Children's Earth Foundation, 23457
Environmental statements; availability, etc.:
Agency statements—
Weekly receipts, 23457–23458

Meetings:
Environmental Laboratory Advisory Board, 23458
Reports and guidance documents; availability, etc.:
Clean Water Act—
Section 319 nonpoint source grants awarded to Indian Tribes; guidelines, 23458–23461

Farm Credit Administration
PROPOSED RULES
Farm credit system:
Farmers, ranchers, and aquatic producers or harvesters; eligibility and scope of financing, 23425–23426
Meeting, 23426–23427
NOTICES
Meetings; Sunshine Act, 23461

Federal Aviation Administration
RULES
Airworthiness directives:
Boeing, 23384–23387
Pilatus Aircraft Ltd., 23387–23389
PROPOSED RULES
Airworthiness directives:
EXTRA Flugzeugbau GmbH, 23427–23430
NOTICES
Advisory circulars; availability, etc.:
Continuing analysis and surveillance system; development and implementation, 23518–23519
Passenger facility charges; applications, etc.:
North Bend Municipal Airport, OR, 23519

Federal Communications Commission
RULES
Practice and procedure:
Wireless telecommunications services—
Tribal lands bidding credits, 23417–23423
PROPOSED RULES
Practice and procedure:
Wireless telecommunications services—
Tribal lands bidding credits, 23431–23438
NOTICES
Agency information collection activities; proposals, submissions, and approvals, 23462–23463
Practice and procedure:
EEO Form 393; mandatory electronic filing; Media Bureau implementation, 23463–23464

Federal Emergency Management Agency
RULES
Flood insurance; communities eligible for sale:
Various States, 23408–23410
NOTICES
Agency information collection activities; proposals, submissions, and approvals, 23474

Federal Energy Regulatory Commission
NOTICES
Applications, hearings, determinations, etc.:
Devon Power LLC et al., 23448–23454

Federal Highway Administration
NOTICES
Environmental statements; notice of intent:
Salt Lake and Utah Counties, UT, 23519–23520

Federal Procurement Policy Office
NOTICES
Government contracts:
Executive compensation benchmark amount determination, 23501–23502

Federal Railroad Administration
NOTICES
Traffic control systems; discontinuance or modification:
CSX Transportation, Inc., 23520

Federal Reserve System
NOTICES
Banks and bank holding companies:
Formations, acquisitions, and mergers, 23464

Federal Retirement Thrift Investment Board
NOTICES
Meetings; Sunshine Act, 23464–23465

Federal Transit Administration
NOTICES
Environmental statements; notice of intent:
Salt Lake and Utah Counties, UT, 23519–23520

Food and Drug Administration
NOTICES
Meetings:
Cardiovascular and Renal Drugs Advisory Committee, 23467–23468

Forest Service
NOTICES
Meetings:
Resource Advisory Committees—
Madera County, 23440–23441

General Services Administration
NOTICES
Privacy Act:
Systems of records, 23465–23466

Health and Human Services Department
See Centers for Medicare & Medicaid Services
See Food and Drug Administration
See Health Resources and Services Administration
See Indian Health Service
See Substance Abuse and Mental Health Services Administration
RULES
Health care access:
Individual health insurance market—
Operation of qualified high risk pools; grants to States, 23410–23417

Health Resources and Services Administration
NOTICES
Agency information collection activities; proposals, submissions, and approvals, 23468

Homeland Security Department
See Coast Guard
See Federal Emergency Management Agency

Housing and Urban Development Department
NOTICES
Grants and cooperative agreements; availability, etc.:
Facilities to assist homeless—
Excess and surplus Federal property, 23474–23480

Indian Health Service
NOTICES
Grants and cooperative agreements; availability, etc.:
American Indian and Alaska Native Children, Youth, and Families Mental Health and Community Safety Initiative, 23468–23473

Interior Department
See Land Management Bureau
See National Park Service
See Surface Mining Reclamation and Enforcement Office

Internal Revenue Service
NOTICES
Agency information collection activities; proposals, submissions, and approvals, 23522–23523
Meetings:
Tax Exempt and Govenment Entities Advisory Committee, 23523–23524
Taxpayer Advocacy Panels, 23524

International Trade Commission
NOTICES
Import investigations:
Agricultural tractors, lawn tractors, riding lawnmowers, and components, 23497–23498

Labor Department
See Employment and Training Administration
See Employment Standards Administration
See Mine Safety and Health Administration
See Occupational Safety and Health Administration
NOTICES
Agency information collection activities; proposals, submissions, and approvals, 23498–23499

Land Management Bureau
NOTICES
Recreation management restrictions, etc.:
King Range National Conservation Area, CA; bear-proof food storage canisters; supplementary rules, 23480–23482
Resource management plans, etc.:
Richfield Field Office, UT, 23482–23483
Withdrawal and reservation of lands:
California, 23483–23484

Management and Budget Office
See Federal Procurement Policy Office

Mine Safety and Health Administration
NOTICES
Safety standard petitions:
Baylor Mining, Inc., et al., 23501

National Aeronautics and Space Administration
RULES
Acquisition regulations:
Contracting activity and head of contracting activity; definitions, 23423–23424
Government property; heritage assets, 23424

National Archives and Records Administration
PROPOSED RULES
NARA facilities:
Public use; threats added as prohibited behavior
Correction, 23430

National Credit Union Administration
RULES
Credit unions:
Advertising accuracy and insured status notice, 23381–23384

National Foundation on the Arts and the Humanities
NOTICES
Meetings; Sunshine Act, 23502

National Highway Traffic Safety Administration
NOTICES
Reports and guidance documents; availability, etc.:
Occupant crash protection—
NCAP Test Improvements with Pretensioners and Load Limiters, 23521–23522

National Institute of Standards and Technology
NOTICES
Inventions, Government-owned; availability for licensing, 23442–23443
Meetings:
Trade standards workshops; technical input request, 23443

National Park Service
NOTICES
Agency information collection activities; proposals, submissions, and approvals, 23484
Environmental statements; availability, etc.:
Biscayne National Park, FL, 23485
Denali National Park and Preserve, AK, 23485
Environmental statements; notice of intent:
Jean Lafitte National Historical Park and Preserve, LA, 23485–23486
Meetings:
Acadia National Park Advisory Commission, 23486
Gettysburg National Military Park Advisory Commission, 23486–23487
National Capital Memorial Commission, 23487
National Preservation Technology and Training Board, 23487–23488
National Register of Historic Places:
Pending nominations, 23488–23489
Native American human remains and associated funerary objects:
Alaska State Musuem, Juneau, AK—
Inventory from Tacoma area, Pierce County, WA, 23490
Bernice Pauahi Bishop Museum, Honolulu, HI—
Carved wooden human image and cowrie shell from Moloka'i, HI, 23491
Inventory from Moloka'i, HI, 23490–23491
Burke Museum, University of Washington, Seattle, WA—
Cultural items from Siskiyou County, CA and Klamath County, OR, 23492–23493
Inventory from Lake County, OR, 23491–23492
Springfield Science Museum, MA—
Inventory from Santa Barbara County, CA; correction, 23493–23494
University of California, Riverside, CA—
Inventory from Riverside County, CA, 23495
Inventory from Yucaipa, San Bernardino County, CA, 23496

Navy Department
NOTICES
Inventions, Government-owned; availability for licensing, 23444–23445

Nuclear Regulatory Commission
NOTICES
Agency information collection activities; proposals, submissions, and approvals, 23502–23503

Occupational Safety and Health Administration
PROPOSED RULES
Occcupational safety and health standards:
Walking and working surfaces; personal protective equipment (fall protection systems), 23527–23568

Personnel Management Office
NOTICES
Agency information collection activities; proposals, submissions, and approvals, 23503–23504
Excepted service:
Schedules A, B, and C; positions placed or revoked—Update, 23504–23506

Securities and Exchange Commission
NOTICES
Agency information collection activities; proposals, submissions, and approvals, 23506–23507
Self-regulatory organizations; proposed rule changes:
American Stock Exchange LLC, 23507
International Securities Exchange, Inc., 23507–23517

State Department
NOTICES
Agency information collection activities; proposals, submissions, and approvals, 23518

Substance Abuse and Mental Health Services Administration
NOTICES
Grants and cooperative agreements; availability, etc.:
Substance Abuse Treatment Center—
Screening, brief intervention, referral, and treatment, 23473–23474

Surface Mining Reclamation and Enforcement Office
NOTICES
Agency information collection activities; proposals, submissions, and approvals, 23496–23497

Surface Transportation Board
NOTICES
Railroad operation, acquisition, construction, etc.:
Burlington Northern & Santa Fe Railway Co., 23522

Technology Administration
NOTICES
Committees; establishment, renewal, termination, etc.:
United States-Israel Science and Technology Commission Joint High Level Advisory Panel, 23443–23444

Transportation Department
See Federal Aviation Administration
See Federal Highway Administration
See Federal Railroad Administration
See Federal Transit Administration
See National Highway Traffic Safety Administration
See Surface Transportation Board
NOTICES
Aviation proceedings:
Agreements filed; weekly receipts, 23518

Treasury Department
See Internal Revenue Service
See United States Mint

United States Mint
NOTICES
Committees; establishment, renewal, termination, etc.:
Citizens Coinage Advisory Committee, 23524–23525

Veterans Affairs Department
NOTICES
Meetings:
Captial Asset Realignment for Enhanced Services Commission, 23525
Geriatrics and Gerontology Advisory Committee, 23526
Vocational Rehabilitation and Employment Task Force, 23526

Separate Parts In This Issue

Part II
Labor Department, Occupational Safety and Health Administration, 23527–23568

Reader Aids
Consult the Reader Aids section at the end of this issue for phone numbers, online resources, finding aids, reminders, and notice of recently enacted public laws.

To subscribe to the Federal Register Table of Contents LISTSERV electronic mailing list, go to http://listserv.access.gpo.gov and select Online mailing list archives, FEDREGTOC-L, Join or leave the list (or change settings); then follow the instructions.

CFR PARTS AFFECTED IN THIS ISSUE

A cumulative list of the parts affected this month can be found in the Reader Aids section at the end of this issue.

7 CFR
46.....23377
932.....23378
Proposed Rules:
360.....23425

12 CFR
740.....23381
Proposed Rules:
613 (2 documents) 23425, 23426

14 CFR
39 (2 documents) 23384, 23387
Proposed Rules:
39.....23427

29 CFR
Proposed Rules:
1910.....23528

33 CFR
117.....23390
165 (3 documents) 23390, 23393, 23399

36 CFR
Proposed Rules:
1280.....23430

40 CFR
52.....23404
271.....23407
Proposed Rules:
52.....23430

44 CFR
64.....23408

45 CFR
148.....23410

47 CFR
1.....23417
Proposed Rules:
1.....23431

48 CFR
1802.....23423
1806.....23423
1815.....23423
1816.....23423
1843.....23423
1845.....23424

Rules and Regulations

Federal Register
Vol. 68, No. 85
Friday, May 2, 2003

This section of the FEDERAL REGISTER contains regulatory documents having general applicability and legal effect, most of which are keyed to and codified in the Code of Federal Regulations, which is published under 50 titles pursuant to 44 U.S.C. 1510.

The Code of Federal Regulations is sold by the Superintendent of Documents. Prices of new books are listed in the first FEDERAL REGISTER issue of each week.

DEPARTMENT OF AGRICULTURE

Agricultural Marketing Service

7 CFR Part 46

[Docket No. FV02–369]

RIN 0581–AC21

Perishable Agricultural Commodities Act (PACA): Amending Regulations To Extend PACA Coverage to Fresh and Frozen Fruits and Vegetables That Are Coated or Battered

AGENCY: Agricultural Marketing Service, USDA.

ACTION: Final rule.

SUMMARY: The Department of Agriculture (USDA) is amending the regulations under the Perishable Agricultural Commodities Act (PACA or Act) to extend PACA coverage to include fresh and frozen fruits and vegetables that are coated or battered.

EFFECTIVE DATE: June 2, 2003.

FOR FURTHER INFORMATION CONTACT: James R. Frazier, Chief, PACA Branch, Fruit and Vegetable Programs, AMS, USDA, 1400 Independence Avenue, SW., Room 2095-So. Bldg., Washington, DC 20250, Phone (202) 720–2272.

SUPPLEMENTARY INFORMATION: This regulation is issued under authority of section 15 of the PACA (7 U.S.C. 499o).

The Perishable Agricultural Commodities Act (PACA or Act) establishes a code of fair trade practices covering the marketing of fresh and frozen fruits and vegetables in interstate and foreign commerce. The PACA protects growers, shippers, distributors, and retailers dealing in those commodities by prohibiting unfair and fraudulent trade practices. In this way, the law fosters an efficient nationwide distribution system for fresh and frozen fruits and vegetables, benefiting the whole marketing chain from farmer to consumer. USDA's Agricultural Marketing Service (AMS) administers and enforces the PACA.

The PACA also imposes a statutory trust for the benefit of unpaid sellers or suppliers on all perishable agricultural commodities received by a commission merchant, dealer, or broker and all inventories of food or other products derived from the sale of such commodities or products. Sellers who preserve their trust rights are entitled to payment ahead of other creditors, from trust assets, of money owed on past due accounts.

In January 2000, a large food service distributor in the United States with annual net sales of approximately $8.9 million filed for Chapter 11 bankruptcy protection. The company, which listed over $30 million in produce debt, settled all PACA trust claims except five that involved over $11 million in coated and battered potato products. The firm contended that the coated and battered potatoes were not covered under the PACA trust provisions [7 U.S.C. 499e(c)]. As a result of the disputed bankruptcy claims, the Frozen Potato Products Institute (FPPI), a national trade association whose members are frozen potato processors accounting for 95 percent of all frozen potato products in the United States, in June 2000, asked AMS for a written advisory opinion to clarify whether or not coated or battered potato products are covered under the PACA.

The majority of FPPI's members coat or batter their potato products to preserve their color and crispness while under heat lamps after cooking. The operation involves dipping potato strips into a mixture of water and natural vegetable starch (*e.g.*, potato or rice). Subsequently, a crisping agent such as dextrin and/or a chemical leavening agent are added to the product. The product is then air blown to remove all but a thin layer of coating, oil-blanched, and then finally frozen.

Coated or battered products are in great demand by fast food restaurants and consumers because the operation preserves the color and crispness of potatoes held under heat lamps, a common practice in fast food restaurants, although it does not alter the taste or texture of the product. Frozen potato processors have seen dramatic growth in the market for coated potatoes since the technology was first introduced in the early 1990's, and FPPI states that it expects that trend to continue. The food service distributor that filed for bankruptcy protection supplied approximately 36,000 restaurants throughout the United States.

According to FPPI, 8.2 billion pounds of frozen potato products were produced in the United States from April 1999 to April 2000. Out of that total, approximately 26 percent were coated or battered, accounting for 2.1 billion pounds of potato products with a market value exceeding $800 million.

In its response to FPPI, dated August 16, 2000, AMS concluded that coating or battering does not alter the essential character of the potato products because the operation leaves them virtually indistinguishable in appearance and texture from those that have not been coated or battered. The operation, AMS stated, is directly analogous to those described in 7 CFR 46.2(u) that may be performed on a perishable agricultural commodity without changing the commodity into a food of a different kind or character. In addition, the use of starches in the operation likely has less of an impact on the texture or essential character of the potato than other processes already expressly accepted in 7 CFR 46.2(u), such as chopping, oil blanching, and adding sugar or other sweetening agents.

Although the PACA regulations previously did not specify that coated and battered perishable agricultural commodities were covered under the PACA, it has always been AMS' policy to recognize that the PACA covered such commodities since the coating or battering operation had no impact on the texture or essential character of the end product. The regulatory amendment herein codifies USDA's policy by amending the current PACA regulations' definition of ''fresh fruits and fresh vegetables'' [7 CFR 42(u)] to expressly extend PACA coverage to perishable agricultural commodities that have been coated or battered.

Comments

A proposed rule to amend the PACA regulations was published in the **Federal Register** on December 16, 2002 (67 FR 77002). The proposal sought to amend Title 7, part 46, to expressly extend PACA coverage to perishable agricultural commodities that have been coated or battered. Before the comment period ended on January 15, 2003, we

received timely comments from Curt Maberry of Curt Maberry Farm, Inc., Lynden, Washington; and Frozen Potato Products Institute (FPPI), McLean, Virginia.

Mr. Maberry and FPPI strongly support AMS' proposal to extend the coverage of the PACA to include fresh and frozen fruits and vegetables that are coated or battered.

In his favorable comment, Mr. Maberry stated that he unequivocally recommends expanding the coverage of the PACA given that markets are ever-evolving, and AMS' proposal to allow fresh and frozen fruits to be coated or battered and still remain covered under the PACA is the correct and proper thing to do. Mr. Maberry applauded AMS for progressively taking care of the farmer.

FPPI fully supports the proposed changes, which grants the request made by FPPI in its petition seeking precisely that AMS codify its existing agency policy that the coating or battering of fruits and vegetables are not processes that are considered to change a perishable agricultural commodity into a food of a different kind or character. In its comment, FPPI requested that AMS include in the preamble to the final rule a statement that it is amending the list of processes in the regulations to codify AMS' historical opinion that coated or battered frozen potato products are perishable agricultural commodities.

AMS received no comments opposing the proposed regulation, and therefore is making no changes to the final rule.

Executive Orders 12866 and 12988

This final rule, issued under the Perishable Agricultural Commodities Act (7 U.S.C. 499 *et seq.*), has been determined to be not significant for the purposes of Executive Order 12866, and therefore, has not been reviewed by the Office of Management and Budget (OMB).

This final rule has been reviewed under Executive Order 12988, Civil Justice Reform, and is not intended to have retroactive effect. This final rule will not preempt any State or local laws, regulations, or policies, unless they present an irreconcilable conflict with this rule. There are no administrative procedures that must be exhausted prior to any judicial challenge to the provisions of this rule.

Effects on Small Businesses

Pursuant to requirements set forth in the Regulatory Flexibility Act (RFA) (5 U.S.C. 601 *et seq.*), AMS has considered the economic impact of this final rule on small entities. The purpose of the RFA is to fit regulatory actions to the scale of businesses subject to such actions in order that small businesses will not be unduly or disproportionately burdened. Small agricultural service firms have been defined by the Small Business Administration (SBA) (13 CFR 121.601) as those whose annual receipts are less than $5,000,000. There are approximately 15,700 firms licensed under the PACA, many of which could be classified as small entities.

AMS recognizes that frozen potato products represent the largest single frozen commodity in the United States. PACA coverage of such commodities will affect countless growers, shippers, processors, and distributors who deal in the commodities, most of which are small businesses. To exclude over 26 percent of frozen potato products from coverage of the PACA, however, is inconsistent with the intent of Congress in enacting the PACA to protect producers and dealers of fresh and frozen fruits and vegetables.

This final rule is being issued in response to the frozen food industry's request that AMS codify its opinion that the coating or battering of fruits and vegetables is an operation that does not change a perishable agricultural commodity into a food of a different kind or character. Producers and distributors of coated and battered produce will benefit since they will have the same rights as those afforded other processors and suppliers whose products may be indistinguishable in appearance or texture, but not coated or battered. AMS believes that this final rule will help reduce litigation time and expenses for small produce businesses that seek to enforce their trust rights in federal district courts.

Given the preceding discussion, AMS has determined that the provisions of this final rule will not have a significant economic impact on a substantial number of small entities.

Paperwork Reduction Act

In compliance with Office of Management and Budget (OMB) regulations (5 CFR part 1320) which implement the Paperwork Reduction Act of 1995 (Pub. L. 104–13), the information collection and recordkeeping requirements that are covered by this final rule were approved under OMB number 0581–0031 on September 30, 2001, and expire on September 30, 2004.

List of Subjects in 7 CFR Part 46

Agricultural commodities, Brokers, Penalties, Reporting and recordkeeping requirements.

■ For the reasons set forth in the preamble, 7 CFR part 46 is amended as follows:

PART 46—[AMENDED]

■ 1. The authority citation for part 46 continues to read as follows:

Authority: Sec. 15, 46 Stat. 537; 7 U.S.C. 499o

■ 2. In § 46.2, paragraph (u) is revised to read as follows:

§ 46.2 Definitions.

* * * * *

(u) *Fresh fruits and fresh vegetables* include all produce in fresh form generally considered as perishable fruits and vegetables, whether or not packed in ice or held in common or cold storage, but does not include those perishable fruits and vegetables which have been manufactured into articles of food of a different kind or character. The effects of the following operations shall not be considered as changing a commodity into a food of a different kind or character: Water, steam, or oil blanching, battering, coating, chopping, color adding, curing, cutting, dicing, drying for the removal of surface moisture; fumigating, gassing, heating for insect control, ripening and coloring; removal of seed, pits, stems, calyx, husk, pods rind, skin, peel, et cetera; polishing, precooling, refrigerating, shredding, slicing, trimming, washing with or without chemicals; waxing, adding of sugar or other sweetening agents; adding ascorbic acid or other agents to retard oxidation; mixing of several kinds of sliced, chopped, or diced fruit or vegetables for packaging in any type of containers; or comparable methods of preparation.

* * * * *

Dated: April 28, 2003.

A.J. Yates,

Administrator, Agricultural Marketing Service.

[FR Doc. 03–10819 Filed 5–1–03; 8:45 am]

BILLING CODE 3410–02–P

DEPARTMENT OF AGRICULTURE

Agricultural Marketing Service

7 CFR Part 932

[Docket No. FV03–932–1 FR]

Olives Grown in California; Increased Assessment Rate

AGENCY: Agricultural Marketing Service, USDA.

ACTION: Final rule.

SUMMARY: This rule increases the assessment rate established for the California Olive Committee (committee) for the 2003 and subsequent fiscal years from $10.09 to $13.89 per ton of olives handled. The committee locally administers the marketing order regulating the handling of olives grown in California. Authorization to assess olive handlers enables the committee to incur expenses that are reasonable and necessary to administer the program. The fiscal year began January 1 and ends December 31. The assessment rate will remain in effect indefinitely unless modified, suspended, or terminated.

EFFECTIVE DATE: May 5, 2003.

FOR FURTHER INFORMATION CONTACT: Toni Sasselli, Program Assistant, California Marketing Field Office, Marketing Order Administration Branch, Fruit and Vegetable Programs, AMS, USDA, 2202 Monterey Street, Suite 102B, Fresno, California 93721; telephone: (559) 487–5901, Fax: (559) 487–5906; or George Kelhart, Technical Advisor, Marketing Order Administration Branch, Fruit and Vegetable Programs, AMS, USDA, 1400 Independence Avenue SW., STOP 0237, Washington, DC 20250–0237; telephone: (202) 720–2491, Fax: (202) 720–8938.

Small businesses may request information on complying with this regulation by contacting Jay Guerber, Marketing Order Administration Branch, Fruit and Vegetable Programs, AMS, USDA, 1400 Independence Avenue SW., STOP 0237, Washington, DC 20250–0237; telephone (202) 720–2491, Fax: (202) 720–8938, or E-mail: *Jay.Guerber@usda.gov*.

SUPPLEMENTARY INFORMATION: This rule is issued under Marketing Agreement No. 148 and Order No. 932, both as amended (7 CFR part 932), regulating the handling of olives grown in California, hereinafter referred to as the ''order.'' The order is effective under the Agricultural Marketing Agreement Act of 1937, as amended (7 U.S.C. 601–674), hereinafter referred to as the ''Act.''

The Department of Agriculture (USDA) is issuing this rule in conformance with Executive Order 12866.

This rule has been reviewed under Executive Order 12988, Civil Justice Reform. Under the marketing order now in effect, California olive handlers are subject to assessments. Funds to administer the order are derived from such assessments. It is intended that the assessment rate fixed herein will be applicable to all assessable olives beginning on January 1, 2003, and continue until amended, suspended, or terminated. This rule will not preempt any State or local laws, regulations, or policies, unless they present an irreconcilable conflict with this rule.

The Act provides that administrative proceedings must be exhausted before parties may file suit in court. Under section 608c(15)(A) of the Act, any handler subject to an order may file with USDA a petition stating that the order, any provision of the order, or any obligation imposed in connection with the order is not in accordance with law and request a modification of the order or to be exempted therefrom. Such handler is afforded the opportunity for a hearing on the petition. After the hearing USDA would rule on the petition. The Act provides that the district court of the United States in any district in which the handler is an inhabitant, or has his or her principal place of business, has jurisdiction to review USDA's ruling on the petition, provided an action is filed not later than 20 days after the date of the entry of the ruling.

This rule increases the assessment rate established for the committee for the 2003 and subsequent fiscal years from $10.09 per ton to $13.89 per ton of olives.

The California olive marketing order provides authority for the committee, with the approval of USDA, to formulate an annual budget of expenses and collect assessments from handlers to administer the program. The members of the committee are producers and handlers of California olives. They are familiar with the committee's needs and with the costs for goods and services in their local area and are thus in a position to formulate an appropriate budget and assessment rate. The assessment rate is formulated and discussed in a public meeting. Thus, all directly affected persons have an opportunity to participate and provide input.

For the 2002 and subsequent fiscal years, the committee recommended, and USDA approved, an assessment rate that would continue in effect from fiscal year to fiscal year unless modified, suspended, or terminated by USDA upon recommendation and information submitted by the committee or other information available to USDA.

The committee met on December 11, 2002, and unanimously recommended fiscal year 2003 expenditures of $1,230,590 and an assessment rate of $13.89 per ton of olives. In comparison, last year's budgeted expenditures were $1,428,585. The assessment rate of $13.89 is $3.80 higher than the $10.09 rate currently in effect.

Expenditures recommended by the committee for the 2003 fiscal year include $633,500 for marketing development, $347,090 for administration, and $250,000 for research. Budgeted expenses for these items in 2002 were $811,935 for marketing development, $339,650 for administration, and $250,000 for research.

The assessment rate recommended by the committee was derived by considering anticipated expenses, actual olive tonnage received by handlers, and additional pertinent factors. The California Agricultural Statistics Service (CASS) reported olive receipts for the 2002–03 crop year at 89,006 tons, which compares to 123,439 for the 2001–02 crop year. The reduction in the crop size for the 2002–03 crop year, due in large part to the alternate-bearing characteristics of olives, made it necessary for the committee to recommend an increase in the assessment rate from the current $10.09 per assessable ton to $13.89 per assessable ton, an increase of $3.80 per ton. Income derived from handler assessments, interest, and utilization of reserve funds will be adequate to cover budgeted expenses. Funds in the reserve will be kept within the maximum permitted by the order of approximately one fiscal year's expenses (§ 932.40).

The assessable tonnage for the 2003 fiscal year is expected to be less than the receipts of 89,006 tons reported by CASS, because some olives may be diverted by handlers to uses that are exempt from marketing order requirements. The quantity of olives that is expected to be diverted cannot be published in this document. The olive industry consists of only three handlers, two of which are much larger than the third, and the confidentiality of this handler information must be maintained to protect the proprietary business positions of each of the handlers.

The assessment rate established in this rule will continue in effect indefinitely unless modified, suspended, or terminated by USDA upon recommendation and information submitted by the committee or other available information.

Although this assessment rate will be in effect for an indefinite period, the committee will continue to meet prior to or during each fiscal year to recommend a budget of expenses and consider recommendations for modification of the assessment rate. The dates and times of committee meetings are available from the committee or USDA. Committee meetings are open to the public and interested persons may express their views at these meetings. USDA will evaluate committee recommendations and other available information to determine whether

modification of the assessment rate is needed. Further rulemaking will be undertaken as necessary. The committee's 2003 budget and those for subsequent fiscal years will be reviewed and, as appropriate, approved by USDA.

Final Regulatory Flexibility Analysis

Pursuant to requirements set forth in the Regulatory Flexibility Act (RFA), the Agricultural Marketing Service (AMS) has considered the economic impact of this rule on small entities. Accordingly, AMS has prepared this final regulatory flexibility analysis.

The purpose of the RFA is to fit regulatory actions to the scale of business subject to such actions in order that small businesses will not be unduly or disproportionately burdened. Marketing orders issued pursuant to the Act, and the rules issued thereunder, are unique in that they are brought about through group action of essentially small entities acting on their own behalf. Thus, both statutes have small entity orientation and compatibility.

There are approximately 1,200 producers of olives in the production area and 3 handlers subject to regulation under the marketing order. Small agricultural producers are defined by the Small Business Administration (13 CFR 121.601) as those having annual receipts less than $750,000, and small agricultural service firms are defined as those whose annual receipts are less than $5,000,000.

Based upon information from the committee, the majority of olive producers may be classified as small entities. One of the handlers may be classified as a small entity, but the majority of the handlers may be classified as large entities.

This rule increases the assessment rate established for the committee and collected from handlers for the 2003 and subsequent fiscal years from $10.09 per ton to $13.89 per ton of olives. The committee unanimously recommended 2003 expenditures of $1,230,590 and an assessment rate of $13.89 per ton. The assessment rate of $13.89 per ton is $3.80 per ton higher than the 2002 rate. The quantity of olive receipts for the 2002–03 crop year was reported by CASS to be 89,006 tons, but the actual assessable tonnage for the 2003 fiscal year is expected to be lower. This is because some of the receipts are expected to be diverted by handlers to exempt outlets on which assessments are not paid. The amount of assessable tonnage cannot be reported in this document. The amount of the exempt tonnage must be kept confidential so the business position of each of the three olive handlers is not revealed. The $13.89 per ton assessment rate should be adequate to meet this year's expenses when combined with funds from the authorized reserve and interest income. Funds in the reserve will be kept within the maximum permitted by the order of about one fiscal year's expenses (§ 932.40).

Expenditures recommended by the committee for the 2003 fiscal year include $633,500 for marketing development, $347,090 for administration, and $250,000 for research. Budgeted expenses for these items in 2002 were $811,935 for marketing development, $339,650 for administration, and $250,000 for research.

Last year's olive receipts totaled 123,439 tons compared to this year's tonnage of 89,006. Although the committee decreased 2003 expenses, the significant decrease in olive production makes the higher assessment rate necessary.

The research expenditures will fund studies to develop chemical and scientific defenses to counteract a threat from the olive fruit fly in the California production area. Market development expenditures are lower because the committee's marketing program for 2003 is limited to consumer and nutritionist activities. The committee reviewed and unanimously recommended 2003 expenditures of $1,230,590, which reflects decreases in the research, market development, and administrative budgets.

Prior to arriving at this budget, the committee considered information from various sources, such as the committee's Executive Subcommittee and the Market Development Subcommittee. Alternate spending levels were discussed by these groups, based upon the relative value of various research and marketing projects to the olive industry and the anticipated olive production. The assessment rate of $13.89 per ton of assessable olives was derived by considering anticipated expenses, the volume of assessable olives, and additional pertinent factors.

A review of historical and preliminary information pertaining to the upcoming fiscal year indicates that the grower price for the 2002–03 crop year is estimated to be approximately $672 per ton for canning fruit and $306 per ton for limited-use size fruit. Approximately 85 percent of a ton of olives are canning fruit sizes and 10 percent are limited-use sizes, leaving the balance as unusable cull fruit. Total grower revenue on 89,006 tons would then be $53,563,811 given the percentage of canning and limited-use sizes and current grower prices for those sizes. An assessment rate of $13.89 will generate estimated assessment revenue of approximately 2.3 percent of total grower revenue.

This action increases the assessment obligation imposed on handlers. While assessments impose some additional costs on handlers, the costs are minimal and uniform on all handlers. Some of the additional costs may be passed on to producers. However, these costs are offset by the benefits derived by the operation of the marketing order. In addition, the committee's meeting was widely publicized throughout the California olive industry and all interested persons were invited to attend the meeting and participate in committee deliberations on all issues. Like all committee meetings, the December 11, 2002, meeting was a public meeting and all entities, both large and small, were able to express views on this issue.

This rule imposes no additional reporting or recordkeeping requirements on California olive handlers. As with all Federal marketing order programs, reports and forms are periodically reviewed to reduce information requirements and duplication by industry and public sector agencies.

USDA has not identified any relevant Federal rules that duplicate, overlap, or conflict with this rule.

A proposed rule concerning this action was published in the **Federal Register** on March 10, 2003 (68 FR 11340). Copies of the proposed rule were also mailed or sent via facsimile to all olive handlers. Finally, the proposal was made available through the Internet by the Office of the Federal Register and USDA. A 30-day comment period ending April 9, 2003, was provided for interested persons to respond to the proposal. No comments were received.

A small business guide on complying with fruit, vegetable, and specialty crop marketing agreements and orders may be viewed at: *http://www.ams.usda.gov/fv/moab.html*. Any questions about the compliance guide should be sent to Jay Guerber at the previously mentioned address in the **FOR FURTHER INFORMATION CONTACT** section.

After consideration of all relevant material presented, including the information and recommendation submitted by the committee and other available information, it is hereby found that this rule, as hereinafter set forth, will tend to effectuate the declared policy of the Act.

Pursuant to 5 U.S.C. 553, it is also found and determined that good cause exists for not postponing the effective date of this rule until 30 days after publication in the **Federal Register** because the marketing order requires

that the rate of assessment for each fiscal year apply to all assessable olives handled during such period. The 2003 fiscal year began on January 1, 2003, and the committee needs sufficient funds to pay its authorized expenses, which are incurred on a continuous basis. Further, handlers are aware of this rule which was unanimously recommended at a public meeting. Also, a 30-day comment period was provided for in the proposed rule and no comments were received.

List of Subjects in 7 CFR Part 932

Marketing agreements, Olives, Reporting and recordkeeping requirements.

■ For the reasons set forth in the preamble, 7 CFR part 932 is amended as follows:

PART 932—OLIVES GROWN IN CALIFORNIA

■ 1. The authority citation for 7 CFR part 932 continues to read as follows:

Authority: 7 U.S.C. 601–674.

■ 2. Section 932.230 is revised to read as follows:

§ 932.230 Assessment rate.

On and after January 1, 2003, an assessment rate of $13.89 per ton is established for California olives.

Dated: April 28, 2003.

A.J. Yates,

Administrator, Agricultural Marketing Service.

[FR Doc. 03–10818 Filed 5–1–03; 8:45 am]

BILLING CODE 3410–02–P

NATIONAL CREDIT UNION ADMINISTRATION

12 CFR Part 740

Accuracy of Advertising and Notice of Insured Status

AGENCY: National Credit Union Administration.

ACTION: Final rule.

SUMMARY: The National Credit Union Administration (NCUA) is revising its rule governing advertising and the requirements for use of the official sign and official advertising statement regarding insured status. The revision modernizes and streamlines the rule for ease of reference and addresses the growing use of the Internet for member transactions and the use of trade names in advertising.

EFFECTIVE DATE: This rule is effective July 1, 2003.

FOR FURTHER INFORMATION CONTACT: Dianne M. Salva, Staff Attorney, Division of Operations, Office of General Counsel, at the National Credit Union Administration, 1775 Duke Street, Alexandria, Virginia, 22314, or telephone: (703) 518–6540.

SUPPLEMENTARY INFORMATION:

I. Background

On September 19, 2002, the NCUA Board (the Board) approved the publication of a proposal to update and streamline Part 740, NCUA's regulation requiring accuracy and honesty in insured credit union (CU) advertising and governing a CU's use of the official sign and official advertising statement to inform members of federal share insurance coverage. 67 FR 60604 (September 26, 2002).

The Official Sign: The regulation requires CUs to display the official sign, which sets out in large type ''NCUA'' and in smaller type states, ''Your savings federally insured to $100,000,'' at each teller station or window where insured account funds or deposits are normally received. The purpose of the rule is to ensure that, at the time they deposit funds or transact business with an insured CU, members are informed of the fact that federal share insurance applies to their accounts.

The Official Advertising Statement: The regulation, although containing various exemptions, also requires a CU to include the official advertising statement in any advertising including marketing materials in print, radio or television. The official advertising statement must state in substance, ''This credit union is federally insured by the National Credit Union Administration.'' Alternatively, the CU may use the short form advertising statement, ''Federally insured by NCUA'' with a reproduction of the official sign described above.

The proposal clarified the rule's application to Internet advertisements and member transactions on CU Web sites. It also incorporated legal interpretations permitting CUs to use trade or other names in advertisements and made other minor changes, including rewording it in a plain English style and placing the provisions regarding advertising excess insurance in a separate subsection.

II. Comments

NCUA received fourteen comments from the public. Seven commenters expressed their support for the amendment permitting the use of trade names in advertising. The proposal stated that, while CUs may use trade or other names in advertising, they must use their official charter name in all official or legal documents. The proposal did not include share certificates among the official or legal documents in which CUs must identify themselves with their official charter name. This was an inadvertent omission that has been corrected in the final rule. The purpose in excluding the use of trade names in official or legal documents is to ensure that members do not misinterpret the level of share insurance available to them. The Board agrees with a commenter who suggested that if a CU used the full charter name the first time it appears in a legal document and an acronym later in the same document members would be sufficiently informed about the identity of the CU and the availability of share insurance.

Thirteen commenters supported the requirement to use the official sign and official advertising statement on Internet Web sites, with five stating that the revised rule offered CUs flexibility and would not impose a significant burden. One commenter emphasized that the benefit to consumers would far outweigh any cost incurred by the credit union. Two state leagues stated that most of their credit unions were already in compliance.

Six commenters, while supportive of the proposal, suggested that NCUA permit CUs to alter the official sign's color and font sizes to ensure it is legible and visually prominent on an Internet screen. Although the proposed rule did not suggest any changes to the color or font size of the official sign, the Board agrees that the official sign must be legible to fulfill the purpose of the rule. The Board believes that additional flexibility may be helpful given the size constraints of an Internet screen and the rule's requirement that the sign appear on the same page where other information will also appear. For that reason, the Board is including in the final rule a provision that CUs may vary the font size of the text within the official sign to ensure the text is legible. The Board also recognizes that CUs may find the requirement in the current rule that the official sign appear in blue with white lettering to be unduly restrictive. Many CUs devote significant resources to the design and aesthetics of their Web sites, with a focus on attracting both new and existing members to view the information and transact business. Some commenters were concerned that the traditional colors might be less visible or contrast with CU Web site designs. The Board is most concerned that the message of the official sign is conveyed clearly. The Board also does not want CUs to be unnecessarily restricted in the color or design of their Web sites by the

need to display the official sign in only the traditional colors of blue and white. In the past, NCUA has been asked to consider similar flexibility in the color of the official signs CUs display at teller windows or stations at ''brick and mortar'' locations. The Board sees no reason why CUs should not use the colors of their choosing on the official signs they display both on CU Web sites and in their lobbies. For these reasons, the Board has eliminated from the final rule the requirement that the official sign , have a blue background with white lettering. NCUA will continue to supply CUs with official signs, but will produce them only in the traditional blue and white.

Six commenters also stated that it is unnecessary to require the official sign or advertising statement on Internet pages other than the credit union main page. As an alternative two commenters suggest that the rule only require the official sign on the main page and the log-on screen where members identify themselves in order to conduct transactions on-line, or a membership application page or pages advertising deposit-related products. The Board agrees with these suggestions. All CU Internet sites that permit members to conduct transactions require members to identify themselves on a log-on screen. Displaying the official sign there will provide adequate notice of federal share insurance to the member. Further, displaying the official sign or advertising statement on the page where a viewer can apply for membership or see an advertisement for an insured deposit or share-related product will ensure that the message about federal share insurance is available when it is most relevant.

One commenter suggested that CUs that currently do not display an official sign or advertising statement on their Web sites may need additional time to comply with the proposed changes. The Board wishes to permit CUs ample opportunity to incorporate the official sign and advertising statement into their Web sites, so it is adopting an effective date 60 days following publication of the final rule.

The final rule is identical to the proposed rule with the exception of minor editorial changes, the addition of share certificates among the official or legal documents in which CUs must identify themselves with their official charter name, the provision permitting CUs to use alternative font sizes in the official sign displayed on their Internet Web sites and the elimination of the color requirement for the official sign.

III. Regulatory Procedures

Regulatory Flexibility Act

The Regulatory Flexibility Act requires NCUA to prepare an analysis to describe any significant economic impact any proposed regulation may have on a substantial number of small entities (those under $1 million in assets). The final amendments will not have a significant economic impact on a substantial number of small credit unions and, therefore, a regulatory flexibility analysis is not required.

Paperwork Reduction Act

NCUA has determined that the final regulation does not increase paperwork requirements under the Paperwork Reduction Act of 1995 and regulations of the Office of Management and Budget.

Executive Order 13132

Executive Order 13132 encourages independent regulatory agencies to consider the impact of their actions on state and local interests. In adherence to fundamental federalism principles, NCUA, an independent regulatory agency as defined in 44 U.S.C. 3502(5), voluntarily complies with the executive order. The executive order states that: ''National action limiting the policymaking discretion of the states shall be taken only where there is constitutional and statutory authority for the action and the national activity is appropriate in light of the presence of a problem of national significance.'' This rule will apply to both federal and state credit unions. It does not significantly change the current regulatory framework. It will not have a substantial direct effect on states, the relationship between the national government and the states, or on the distribution of power and responsibilities among the various levels of government. NCUA has determined that the rule does not constitute a policy that has federalism implications for purposes of this executive order.

The Treasury and General Government Appropriations Act, 1999—Assessment of Federal Regulations and Policies on Families

The NCUA has determined that this rule will not affect family well-being within the meaning of section 654 of the Treasury and General Government Appropriations Act, 1999, Public Law 105–277, 112 Stat. 2681 (1998).

Agency Regulatory Goal

NCUA's goal is to promulgate clear and understandable regulations that impose minimal regulatory burden. The regulatory change is understandable and imposes minimal regulatory burden.

Small Business Regulatory Enforcement Fairness Act

The Small Business Regulatory Enforcement Fairness Act of 1996 (Pub. L. 104–121) provides generally for congressional review of agency rules. A reporting requirement is triggered in instances where NCUA issues a final rule as defined by Section 551 of the Administrative Procedure Act. 5 U.S.C. 551. The Office of Management and Budget has found that this rule is not a major rule for purposes of the Small Business Regulatory Enforcement Fairness Act of 1996.

List of Subjects 12 CFR Part 740

Advertisements, Credit unions.

By the National Credit Union Administration Board on April 24,2003.

Becky Baker,

Secretary of the Board.

■ For the reasons set forth in the preamble, NCUA revises 12 CFR part 740 as follows:

PART 740—ACCURACY OF ADVERTISING AND NOTICE OF INSURED STATUS

Sec.
740.0 Scope.
740.1 Definitions.
740.2 Accuracy of advertising.
740.3 Advertising of excess insurance.
740.4 Requirements for the official sign.
740.5 Requirements for the official advertising statement.

■ The authority citation for part 740 continues to read as follows:

Authority: 12 U.S.C. 1766, 12 U.S.C. 1781, 12 U.S.C. 1789.

§ 740.0 Scope.

This part applies to all federally insured credit unions. It prescribes the requirements for the official sign insured credit unions must display and the requirements with regard to the official advertising statement insured credit unions must include in their advertisements. It requires that all other kinds of advertisements be accurate. It also establishes requirements for advertisements of excess insurance.

§ 740.1 Definitions.

(a) *Account* or *accounts* as used in this part means share, share certificate or share draft accounts (or their equivalent under state law, as determined by the Board in the case of insured state credit unions) of a member (which includes other credit unions, public units, and nonmembers where

permitted under the Act) in a credit union of a type approved by the Board which evidences money or its equivalent received or held by a credit union in the usual course of business and for which it has given or is obligated to give credit to the account of the member.

(b) *Insured credit union* as used in this part means a credit union insured by the National Credit Union Administration (NCUA).

§ 740.2 Accuracy of advertising.

No insured credit union may use any advertising (which includes print, electronic, or broadcast media, displays and signs, stationery, and other promotional material) or make any representation which is inaccurate or deceptive in any particular, or which in any way misrepresents its services, contracts, or financial condition, or which violates the requirements of § 707.8 of this subchapter, if applicable. This provision does not prohibit an insured credit union from using a trade name or a name other than its official charter name in advertising or signage, so long as it uses its official charter name in communications with NCUA and for share certificates or certificates of deposit, signature cards, loan agreements, account statements, checks, drafts and other legal documents.

§ 740.3 Advertising of excess insurance.

Any advertising that mentions share or savings account insurance provided by a party other than the NCUA must clearly explain the type and amount of such insurance and the identity of the carrier and must avoid any statement or implication that the carrier is affiliated with the NCUA or the federal government.

§ 740.4 Requirements for the official sign.

(a) Each insured credit union must continuously display the official sign described in paragraph (b) of this section at each station or window where insured account funds or deposits are normally received in its principal place of business and in all its branches, 30 days after its first day of operation as an insured credit union. Each insured credit union must also display the official sign on its Internet page, if any, where it accepts deposits or open accounts, but it may vary the font sizes from that depicted in paragraph (b) of this section to ensure its legibility.

(b) The official sign shall be as depicted below:

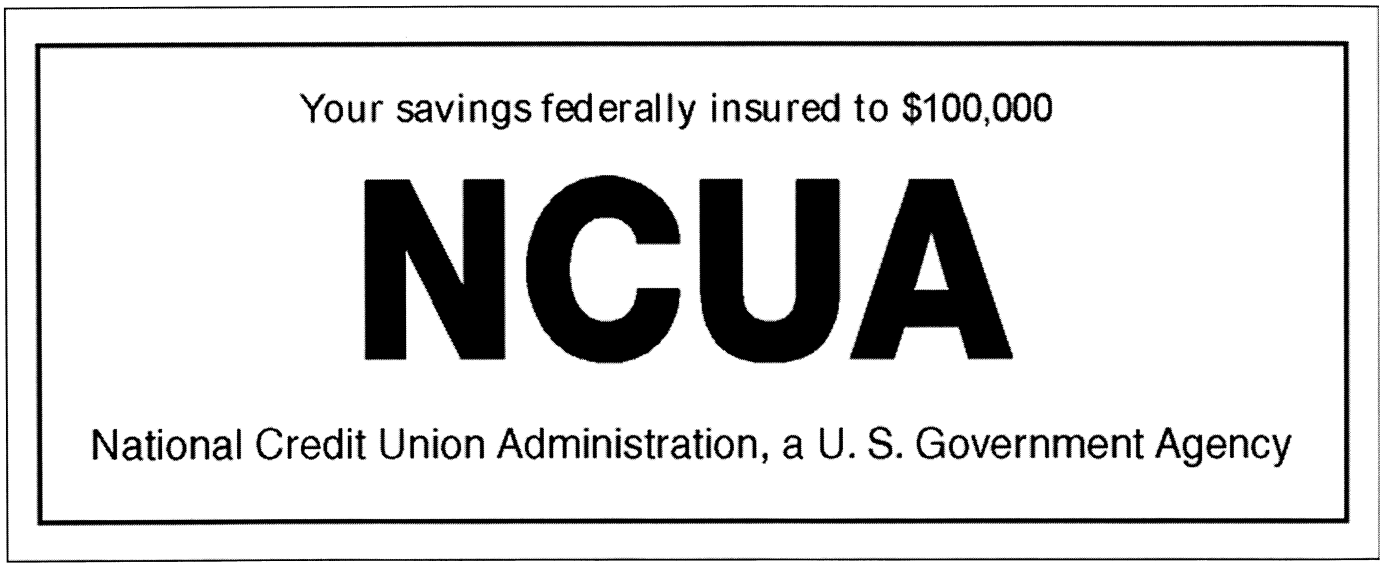

(1) NCUA will automatically supply all insured credit unions an initial supply of official signs with a blue background and white lettering at no cost for compliance with paragraph (a) of this section. If the initial supply is not adequate, the insured credit unions must immediately request additional signs from NCUA. Any credit union that does not have an adequate supply but requests additional signs from NCUA will not be considered to have violated paragraph (a) of this section unless the credit union fails to display the signs after receiving them.

(2) Insured credit unions may purchase additional signs from commercial suppliers in additional colors, materials and sizes, for uses other than those required by paragraph (a) of this section.

(c) An insured credit union must not receive account funds at any teller's station or window where any noninsured credit union or institution receives deposits. Excepted from this prohibition are credit union centers, service centers, or branches servicing more than one credit union where only some of the credit unions are insured by the NCUA. In such instances, immediately above or beside each official sign there must be another sign stating, ''Only the following credit unions serviced by this facility are federally insured by the NCUA __'' (the full name of each credit union insured will follow the word NCUA). The lettering must be of such size and print to be clearly legible to all members conducting share or share deposit transactions.

(d) The Board may require any insured credit union, upon at least 30 days' written notice, to change the wording of its official signs in a manner deemed necessary for the protection of shareholders or others.

(e) For purposes of this section, the terms ''branch,'' ''station,'' ''teller station,'' and ''window'' do not include automated teller machines or point of sale terminals.

§ 740.5 Requirements for the official advertising statement.

(a) Each insured credit union must include the official advertising statement, prescribed in paragraph (b) of this section, in all of its advertisements, including on its main Internet page, except as provided in paragraph (c) of this section.

(1) An insured credit union must include the official advertising statement in its advertisements thirty (30) days after its first day of operations as an insured credit union unless the Regional Director grants it an extension.

(2) If advertising copy without the official advertising statement is on hand on the date the requirements of this section become operative, the insured credit union may use an overstamp or other means to include the official advertising statement until the supplies are exhausted.

(b) The official advertising statement is in substance as follows: This credit union is federally insured by the National Credit Union Administration. The short title ''Federally insured by NCUA'' and a reproduction of the official sign may be used by insured credit unions at their option as the official advertising statement. The official advertising statement must be in a size and print that is clearly legible.

(c) The following advertisements need not include the official advertising statement:

(1) Statements of condition and reports of condition of an insured credit union which are required to be published by state or federal law or regulation;

(2) Credit union supplies such as stationery (except when used for circular letters), envelopes, deposit slips, checks, drafts, signature cards, account passbooks, and noninsurable certificates;

(3) Signs or plates in the credit union office or attached to the building or buildings in which the offices are located;

(4) Listings in directories;

(5) Advertisements not setting forth the name of the insured credit union;

(6) Display advertisements in credit union directories, provided the name of the credit union is listed on any page in the directory with a symbol or other descriptive matter indicating it is insured;

(7) Joint or group advertisements of credit union services where the names of insured credit unions and noninsured credit unions are listed and form a part of such advertisement;

(8) Advertisements by radio that do not exceed thirty (30) seconds in time;

(9) Advertisements by television, other than display advertisements, that do not exceed thirty (30) seconds in time;

(10) Advertisements that because of their type or character would be impractical to include the official advertising statement, including but not limited to, promotional items such as calendars, matchbooks, pens, pencils, and key chains;

(11) Advertisements that contain a statement to the effect that the credit union is insured by the National Credit Union Administration, or that its accounts and shares or members are insured by the Administration to the maximum of $100,000 for each member or shareholder;

(12) Advertisements that do not relate to member accounts, including but not limited to advertisements relating to loans by the credit union, safekeeping box business or services, traveler's checks on which the credit union is not primarily liable, and credit life or disability insurance.

(d) The non-English equivalent of the official advertising statement may be used in any advertisement provided that the Regional Director gives prior approval to the translation.

[FR Doc. 03–10613 Filed 5–1–03; 8:45 am]

BILLING CODE 7535–01–P

DEPARTMENT OF TRANSPORTATION

Federal Aviation Administration

14 CFR Part 39

[Docket No. 2002–NM–158–AD; Amendment 39–13137; AD 2003–09–08]

RIN 2120–AA64

Airworthiness Directives; Boeing Model 767–200, –300, and –300F Series Airplanes

AGENCY: Federal Aviation Administration, DOT.

ACTION: Final rule.

SUMMARY: This amendment supersedes an existing airworthiness directive (AD), applicable to all Boeing Model 767 series airplanes, that currently requires an inspection to ensure that all bolts of the support beam of the hinge fitting assembly on both the left- and right-hand outboard trailing edge flaps are the correct length and type, and correction of any discrepancy found. This amendment reduces the applicability of the existing AD, adds inspections, and mandates terminating action. The actions specified by this AD are intended to prevent failure of the bolts that attach the outboard trailing edge flap to the support beam, which could result in loss of the flap and consequent reduced controllability of the airplane. This action is intended to address the identified unsafe condition.

DATES: Effective June 6, 2003.

The incorporation by reference of certain publications, as listed in the regulations, is approved by the Director of the Federal Register as of June 6, 2003.

The incorporation by reference of Boeing Alert Service Bulletin 767–27A0151, Revision 1, dated April 2, 1997, as listed in the regulations, was approved previously by the Director of the Federal Register as of May 7, 1997 (62 FR 24015, May 2, 1997).

ADDRESSES: The service information referenced in this AD may be obtained from Boeing Commercial Airplane Group, P.O. Box 3707, Seattle, Washington 98124–2207. This information may be examined at the Federal Aviation Administration (FAA), Transport Airplane Directorate, Rules Docket, 1601 Lind Avenue, SW., Renton, Washington; or at the Office of the Federal Register, 800 North Capitol Street, NW., suite 700, Washington, DC.

FOR FURTHER INFORMATION CONTACT: Suzanne Masterson, Aerospace Engineer, Airframe Branch, ANM–120S, FAA, Seattle Aircraft Certification Office, 1601 Lind Avenue, SW., Renton, Washington 98055–4056; telephone (425) 917–6441; fax (425) 917–6590.

SUPPLEMENTARY INFORMATION: A proposal to amend part 39 of the Federal Aviation Regulations (14 CFR part 39) by superseding AD 97–08–51, amendment 39–10012 (62 FR 24015, May 2, 1997), which is applicable to all Boeing Model 767 series airplanes, was published in the **Federal Register** on September 30, 2002 (67 FR 61301). The action proposed to continue to require an inspection to ensure that all bolts of the support beam of the hinge fitting assembly on both the left- and right-hand outboard trailing edge flaps are the correct length and type, and correction of any discrepancy found. The action also proposed to reduce the applicability of the existing AD, add inspections, and mandate terminating action.

Comments

Interested persons have been afforded an opportunity to participate in the making of this amendment. Due consideration has been given to the comments received.

Revise Compliance Time in Paragraph (a)(2)(ii)

One commenter requests that the FAA revise the compliance time stated in paragraph (a)(2)(ii) of the proposed AD from ''Within 30 days after May 7, 1997,'' to ''Within 30 days after the effective date of this AD.'' The commenter notes that some airplanes will accumulate 10,000 total flight cycles or 25,000 total flight hours after

June 7, 1997, and before the effective date of the new AD. These airplanes would be out of compliance with the proposed AD as of the effective date of the AD.

The FAA does not agree to revise the compliance time specified in paragraph (a)(2)(ii) of this final rule. Paragraph (a) of this final rule is a restatement of paragraph (a) of AD 97–08–51, which this AD supersedes. June 7, 1997, is the effective date of AD 97–08–51. Our intent is that airplanes that are subject to AD 97–08–51 comply with the original requirements of that AD, at the original compliance times. If the airplane is in compliance with AD 97–08–51 as of the effective date of this new AD, then it will not be out of compliance with this AD as of the effective date of this AD.

Relevant to this comment, we agree that we need to clarify the old and new requirements of this AD. The headings that would normally be used in a superseding AD to clearly identify the restated requirements of the existing AD (*e.g.*, ''Requirements of AD 97–08–51'') and the new requirements (*e.g.*, ''New Requirements of This AD'') were omitted from the proposed AD. We have included these headings in this final rule. For further clarification, we have made the following changes to this final rule:

- We have reidentified paragraphs (c) and (d) of the proposed AD as paragraphs (b) and (c) of this final rule, respectively. (Thus, the existing requirements of AD 97–08–51 are identified with the same paragraph lettering that they have in AD 97–08–51 and are grouped under the heading ''Requirements of AD 97–08–51'' in this AD.)
- We have reidentified paragraph (b) of the proposed AD (the ''Repeat Inspection for Certain Airplanes'') as paragraph (d) of this final rule, to group it with the other new requirements of this AD.
- We have added a new sentence to paragraph (d) of this final rule (paragraph (b) of the proposed AD) to clarify that any necessary corrective actions must be accomplished in accordance with paragraphs (b) and (c) of this AD.
- We have revised paragraph references in paragraphs (e) and (h) of this final rule according to the changes described previously. Paragraph references in paragraph (j)(2) of this final rule (which was included as paragraph (i)(2) of the proposed AD) do not need to be revised in this final rule because the paragraph references in that paragraph of the proposed AD were incorrect, but are correct following the other changes to this final rule.

Give Credit for Action Accomplished Previously

One commenter requests that the FAA give credit for accomplishment of the repeat inspection specified in paragraph (b) of the proposed AD (paragraph (d) of this final rule) in accordance with Boeing Alert Service Bulletin 767–27A0155, Revision 2, dated July 8, 1999. The commenter notes that it has been accomplishing inspections in accordance with that service bulletin since accomplishing the initial inspection required by paragraph (a) of the existing AD.

We concur with the commenter's request. Our intent is that accomplishment of the inspection required by paragraph (f) of this AD or the modification required by paragraph (g) of this AD eliminates the need to accomplish the inspection in paragraph (a) or (d) of this AD, provided that the requirements of paragraph (f) or (g) of this AD are accomplished within the compliance time specified in paragraph (a) or (d) of this AD, as applicable. We have added a new paragraph (h) to this final rule (and redesignated subsequent paragraphs accordingly) to state that airplanes on which paragraph (f) or (g) of this AD is accomplished within the compliance time specified in paragraph (a) or (d) of this AD, as applicable, do not need to be inspected in accordance with paragraph (a) or (d) of this AD.

Extend Compliance Time for Terminating Action

Two commenters request that we extend the compliance time for the terminating action in paragraph (g) of the proposed AD. Paragraph (g) of the proposed AD specified a compliance threshold of 6 years, 25,000 flight hours, or 12,000 flight cycles after accomplishment of paragraph (a) of the proposed AD, whichever is first; and a grace period (for airplanes close to or over the threshold) of 90 days after the effective date of the AD. Both commenters note that most of the airplanes in their fleets will be subject to the 90-day grace period because they have passed the applicable threshold. One of the commenters requests that we extend the compliance time to 18 months after the effective date of the AD, so that the majority of airplanes can be modified during a regularly scheduled ''C''-check. The second commenter is concerned about the availability of parts needed to accomplish the terminating action and requests that we extend the compliance time to 5 years after the effective date of the AD.

We agree that the grace period segment of the compliance time for the terminating action in paragraph (g) of this AD may be extended from 90 days to 18 months after the effective date of this AD. In developing an appropriate compliance time for the terminating action, the FAA considered not only the urgency of addressing the subject unsafe condition and the maintenance schedules of affected operators, but also the availability of required parts. The FAA finds that 18 months represents an appropriate interval of time allowable for affected airplanes to continue to operate without compromising safety and wherein an ample number of required parts will be available for modification of the U.S. fleet. (No data were presented to justify that a compliance time longer than 18 months would adequately ensure safety.) Paragraph (g) has been revised accordingly. Also, for clarification, we have revised paragraph (g) of this final rule to move the compliance times from that paragraph into new subparagraphs (g)(1) and (g)(2) of this final rule.

Correct Typographical Errors in Paragraphs (g) and (h)

One commenter notes a typographical error in paragraph (g) of the proposed AD. The word ''filters'' should be ''fillers.'' Also, that commenter and a second commenter note that Boeing Alert Service Bulletin 767–27A0155 is misidentified in paragraph (h) of the proposed AD (included as paragraph (i) of this final rule) as Boeing Alert Service Bulletin 767–29A0155. We concur and have corrected these typographical errors in paragraphs (g) and (i) of this final rule.

Explanation of Additional Changes to Proposed AD

We have revised the applicability statement of this AD to clarify that Boeing Model 767–400ER series airplanes are not affected by this AD. The airplanes with line numbers 1 through 710 inclusive are Model 767–200, -300, and ''300F series airplanes.

For clarification, we have revised paragraph (f) of this final rule to move the compliance times from that paragraph into new subparagraphs (f)(1) and (f)(2) of this AD.

The Summary section of the proposed AD states that the proposed AD would ''mandate terminating action for certain airplanes.'' However, this AD mandates terminating action for all airplanes subject to this AD. We have corrected this error in this final rule.

Conclusion

After careful review of the available data, including the comments noted above, the FAA has determined that air safety and the public interest require the adoption of the rule with the changes previously described. The FAA has determined that these changes will neither increase the economic burden on any operator nor increase the scope of the AD.

Cost Impact

There are approximately 700 Model 767 series airplanes of the affected design in the worldwide fleet. The FAA estimates that 287 airplanes of U.S. registry will be affected by this AD.

The actions that are currently required by AD 97–08–51 take approximately 7 work hours per airplane to accomplish, at an average labor rate of $60 per work hour. Based on these figures, the cost impact of the currently required actions on U.S. operators is estimated to be $120,540, or $420 per airplane.

The torque check that is required by this AD action will take approximately 2 work hours per airplane to accomplish, at an average labor rate of $60 per work hour. Based on these figures, the cost impact of the torque check required by this AD on U.S. operators is estimated to be $34,440, or $120 per airplane, per check.

The terminating action that is required by this AD action will take approximately 3 work hours per airplane to accomplish, at an average labor rate of $60 per work hour. Required parts will cost approximately $3,058 per airplane. Based on these figures, the cost impact of the terminating action required by this AD on U.S. operators is estimated to be $929,306, or $3,238 per airplane.

The cost impact figures discussed above are based on assumptions that no operator has yet accomplished any of the requirements of this AD action, and that no operator would accomplish those actions in the future if this AD were not adopted. The cost impact figures discussed in AD rulemaking actions represent only the time necessary to perform the specific actions actually required by the AD. These figures typically do not include incidental costs, such as the time required to gain access and close up, planning time, or time necessitated by other administrative actions.

Regulatory Impact

The regulations adopted herein will not have a substantial direct effect on the States, on the relationship between the national government and the States, or on the distribution of power and responsibilities among the various levels of government. Therefore, it is determined that this final rule does not have federalism implications under Executive Order 13132.

For the reasons discussed above, I certify that this action (1) is not a ''significant regulatory action'' under Executive Order 12866; (2) is not a ''significant rule'' under DOT Regulatory Policies and Procedures (44 FR 11034, February 26, 1979); and (3) will not have a significant economic impact, positive or negative, on a substantial number of small entities under the criteria of the Regulatory Flexibility Act. A final evaluation has been prepared for this action and it is contained in the Rules Docket. A copy of it may be obtained from the Rules Docket at the location provided under the caption **ADDRESSES.**

List of Subjects in 14 CFR Part 39

Air transportation, Aircraft, Aviation safety, Incorporation by reference, Safety.

Adoption of the Amendment

■ Accordingly, pursuant to the authority delegated to me by the Administrator, the Federal Aviation Administration amends part 39 of the Federal Aviation Regulations (14 CFR part 39) as follows:

PART 39—AIRWORTHINESS DIRECTIVES

■ 1. The authority citation for part 39 continues to read as follows:

Authority: 49 U.S.C. 106(g), 40113, 44701.

§ 39.13 [Amended]

■ 2. Section 39.13 is amended by removing amendment 39–10012 (62 FR 24015, May 2, 1997), and by adding a new airworthiness directive (AD), amendment 39–13137, to read as follows:

2003–09–08 Boeing: Amendment 39–13137. Docket 2002–NM–158–AD. Supersedes AD 97–08–51, Amendment 39–10012.

Applicability: Model 767–200, –300, and –300F series airplanes; line numbers 1 through 710 inclusive; certificated in any category.

Note 1: This AD applies to each airplane identified in the preceding applicability provision, regardless of whether it has been modified, altered, or repaired in the area subject to the requirements of this AD. For airplanes that have been modified, altered, or repaired so that the performance of the requirements of this AD is affected, the owner/operator must request approval for an alternative method of compliance in accordance with paragraph (j)(1) of this AD. The request should include an assessment of the effect of the modification, alteration, or repair on the unsafe condition addressed by this AD; and, if the unsafe condition has not been eliminated, the request should include specific proposed actions to address it.

Compliance: Required as indicated, unless accomplished previously.

To prevent failure of the bolts that attach the outboard trailing edge flap to the support beam, which could result in loss of the flap and consequent reduced controllability of the airplane, accomplish the following:

Requirements of AD 97–08–51

Inspection

(a) Perform an inspection to check the bolt torque, bolt length, and type of all bolts of both hinge fittings on the left- and right-hand outboard trailing edge flaps, in accordance with Boeing Alert Service Bulletin 767–27A0151, Revision 1, dated April 2, 1997; or Revision 4, excluding Evaluation Form, dated August 27, 1998. Perform these inspections at the time specified in paragraph (a)(1) or (a)(2) of this AD, as applicable.

(1) For airplanes that accumulated 15,000 or more total flight cycles, or 37,500 or more total flight hours, as of May 7, 1997 (the effective date of AD 97–08–51, amendment 39–10012): Perform the inspection within 15 days after May 7, 1997.

(2) For all other airplanes: Perform the inspection at the later of the times specified in paragraphs (a)(2)(i) and (a)(2)(ii) of this AD.

(i) Prior to the accumulation of 10,000 total flight cycles, or 25,000 total flight hours, whichever occurs first.

(ii) Within 30 days after May 7, 1997.

Corrective Actions

(b) If any bolt of the hinge fittings of the left- and right-hand outboard trailing edge flaps is below the torque check threshold specified in Boeing Alert Service Bulletin 767–27A0151, Revision 1, dated April 2, 1997; or Revision 4, excluding Evaluation Form, dated August 27, 1998: Prior to further flight, accomplish the actions specified in paragraph (b)(1) or (b)(2) of this AD, in accordance with the alert service bulletin.

(1) Perform a dye penetrant inspection of all the bolts of the hinge fitting to detect any cracking or discrepancy.

(i) If no cracking or discrepancy is detected, prior to further flight, reinstall the bolt using new nuts and washers.

(ii) If any cracking or discrepancy is detected, prior to further flight, replace the cracked or discrepant bolt with a new or serviceable bolt.

(2) Replace all of the bolts of both hinge fittings with new or serviceable bolts.

(c) If the length or type of any bolt of the hinge fittings of the left- and right-hand outboard trailing edge flaps is outside the specifications of Boeing Alert Service Bulletin 767–27A0151, Revision 1, dated April 2, 1997; or Revision 4, excluding Evaluation Form, dated August 27, 1998: Prior to further flight, replace the bolt with a new or serviceable bolt in accordance with the alert service bulletin.

New Requirements of This AD

Repeat Inspection for Certain Airplanes

(d) For airplanes on which the inspection required by paragraph (a) of this AD was accomplished prior to the accumulation of 5,000 total flight cycles or 12,500 total flight hours: Repeat the inspection required by paragraph (a) of this AD one time within 120 days after the effective date of this AD. Perform corrective actions, as applicable, in accordance with paragraphs (b) and (c) of this AD.

Credit for Actions Accomplished per Previous Revisions of Service Bulletin

(e) Accomplishment of the actions specified in paragraphs (a), (b), and (c) of this AD, in accordance with Boeing Alert Service Bulletin 767–27A0151, dated April 1, 1997; Revision 2, dated April 10, 1997; or Revision 3, dated July 7, 1997; before the effective date of this AD; is considered acceptable for compliance with the applicable requirements of this AD.

Repetitive Inspections

(f) At the later of the times specified in paragraphs (f)(1) and (f)(2) of this AD, perform an inspection to check the bolt torque of both hinge fittings on the left- and right-hand outboard trailing edge flaps, and retorque if applicable, in accordance with Boeing Service Bulletin 767–27A0155, Revision 2, excluding Evaluation Form, dated July 8, 1999. Repeat the inspection every 3 years, 12,500 flight hours, or 6,000 flight cycles, whichever is first, until paragraph (g) of this AD has been accomplished.

(1) Within 3 years, 12,500 flight hours, or 6,000 flight cycles after accomplishment of paragraph (a) of this AD, whichever is first.

(2) Within 90 days after the effective date of this AD.

Terminating Action

(g) At the later of the times specified in paragraphs (g)(1) and (g)(2) of this AD, perform the terminating action (including replacement of the six titanium bolts in each flap support fitting with steel bolts and self-aligning washers, and installation of radius fillers at the four aft bolt locations), in accordance with Part 2 of the Accomplishment Instructions of Boeing Service Bulletin 767–27A0155, Revision 2, excluding Evaluation Form, dated July 8, 1999. Accomplishment of this paragraph ends the repetitive inspections required by paragraph (f) of this AD.

(1) Within 6 years, 25,000 flight hours, or 12,000 flight cycles after accomplishment of paragraph (a) of this AD, whichever is first.

(2) Within 18 months after the effective date of this AD.

(h) Airplanes on which the inspection required by paragraph (f) of this AD or the terminating action required by paragraph (g) of this AD is accomplished within the compliance time specified in paragraph (a) or (d) of this AD, as applicable, are not required to accomplish the inspection required by paragraph (a) or (d) of this AD, as applicable.

Credit for Actions Accomplished per Previous Revisions of Service Bulletin

(i) Accomplishment of the actions specified in paragraphs (f) and/or (g) of this AD in accordance with Boeing Alert Service Bulletin 767–27A0155, dated August 27, 1998; or Revision 1, dated December 22, 1998; before the effective date of this AD; is considered acceptable for compliance with the applicable requirements of this AD.

Alternative Methods of Compliance

(j)(1) An alternative method of compliance or adjustment of the compliance time that provides an acceptable level of safety may be used if approved by the Manager, Seattle Aircraft Certification Office (ACO), FAA. Operators shall submit their requests through an appropriate FAA Principal Maintenance Inspector, who may add comments and then send it to the Manager, Seattle ACO.

(2) Alternative methods of compliance, approved previously in accordance with AD 97–08–51, amendment 39–10012, are approved as alternative methods of compliance with paragraphs (a), (b), and (c) of this AD.

Note 2: Information concerning the existence of approved alternative methods of compliance with this AD, if any, may be obtained from the Seattle ACO.

Special Flight Permits

(k) Special flight permits may be issued in accordance with sections 21.197 and 21.199 of the Federal Aviation Regulations (14 CFR 21.197 and 21.199) to operate the airplane to a location where the requirements of this AD can be accomplished.

Incorporation by Reference

(l) Unless otherwise specified in this AD, the actions shall be done in accordance with Boeing Alert Service Bulletin 767–27A0151, Revision 1, dated April 2, 1997, or Boeing Alert Service Bulletin 767–27A0151, Revision 4, excluding Evaluation Form, dated August 27, 1998; and Boeing Service Bulletin 767–27A0155, Revision 2, excluding Evaluation Form, dated July 8, 1999; as applicable.

(1) The incorporation by reference of Boeing Alert Service Bulletin 767–27A0151, Revision 4, excluding Evaluation Form, dated August 27, 1998; and Boeing Service Bulletin 767–27A0155, Revision 2, excluding Evaluation Form, dated July 8, 1999; is approved by the Director of the Federal Register in accordance with 5 U.S.C. 552(a) and 1 CFR part 51.

(2) The incorporation by reference of Boeing Alert Service Bulletin 767–27A0151, Revision 1, dated April 2, 1997, was approved previously by the Director of the Federal Register as of May 7, 1997 (62 FR 24015, May 2, 1997).

(3) Copies may be obtained from Boeing Commercial Airplane Group, P.O. Box 3707, Seattle, Washington 98124–2207. Copies may be inspected at the FAA, Transport Airplane Directorate, 1601 Lind Avenue, SW., Renton, Washington; or at the Office of the Federal Register, 800 North Capitol Street, NW., suite 700, Washington, DC.

Effective Date

(m) This amendment becomes effective on June 6, 2003.

Issued in Renton, Washington, on April 23, 2003.

Ali Bahrami,

Acting Manager, Transport Airplane Directorate, Aircraft Certification Service.

[FR Doc. 03–10511 Filed 5–1–03; 8:45 am]

BILLING CODE 4910–13–P

DEPARTMENT OF TRANSPORTATION

Federal Aviation Administration

14 CFR Part 39

[Docket No. 2003–CE–06–AD; Amendment 39–13140; AD 2003–09–11]

RIN 2120–AA64

Airworthiness Directives; Pilatus Aircraft Ltd. Models PC–12 and PC–12/45 Airplanes

AGENCY: Federal Aviation Administration, DOT.

ACTION: Final rule.

SUMMARY: This amendment adopts a new airworthiness directive (AD) that applies to certain Pilatus Aircraft Ltd. (Pilatus) Models PC–12 and PC–12/45 airplanes. This AD requires you to inspect the pedestal leg assembly on aft facing passenger seats for correct configuration. If incorrectly configured, this AD requires you to modify to the correct configuration. This AD is the result of mandatory continuing airworthiness information (MCAI) issued by the airworthiness authority for Switzerland. The actions specified by this AD are intended to detect and correct pedestal leg assemblies on aft facing passenger seats that are in nonconformance with manufacturing standards. Nonconforming passenger seats could result in passenger injury in an emergency situation.

DATES: This AD becomes effective on June 16, 2003.

The Director of the Federal Register approved the incorporation by reference of certain publications listed in the regulations as of June 16, 2003.

ADDRESSES: You may get the service information referenced in this AD from Pilatus Aircraft Ltd., Customer Liaison Manager, CH–6371 Stans, Switzerland; telephone: +41 41 619 63 19; facsimile: +41 41 619 6224; or from Pilatus Business Aircraft Ltd., Product Support Department, 11755 Airport Way, Broomfield, Colorado 80021; telephone: (303) 465–9099; facsimile: (303) 465–6040. You may view this information at the Federal Aviation Administration

(FAA), Central Region, Office of the Regional Counsel, Attention: Rules Docket No. 2003–CE–06–AD, 901 Locust, Room 506, Kansas City, Missouri 64106; or at the Office of the Federal Register, 800 North Capitol Street, NW., suite 700, Washington, DC.

FOR FURTHER INFORMATION CONTACT: Doug Rudolph, Aerospace Engineer, FAA, Small Airplane Directorate, 901 Locust, Room 301, Kansas City, Missouri 64106; telephone: (816) 329–4059; facsimile: (816) 329–4090.

SUPPLEMENTARY INFORMATION:

Discussion

What events have caused this AD? The Federal Office for Civil Aviation (FOCA), which is the airworthiness authority for Switzerland, recently notified FAA that an unsafe condition may exist on certain Pilatus Models PC–12 and PC–12/45 airplanes. The FOCA reports that, during manufacture of certain aft facing aircraft passenger seats (vendor part numbers (VPN) 403008–1 and 403008–2), the forward pedestal legs were installed in reverse order. One instance was found during the seat manufacturer's final quality control inspection. Pilatus found another instance.

What is the potential impact if FAA took no action? This condition, if not corrected, could result in failure of the aircraft seat pedestal leg assembly. Such failure could result in passenger injury in an emergency situation.

Has FAA taken any action to this point? We issued a proposal to amend part 39 of the Federal Aviation Regulations (14 CFR part 39) to include an AD that would apply to certain Pilatus Models PC–12 and PC–12/45 airplanes. This proposal was published in the **Federal Register** as a notice of proposed rulemaking (NPRM) on February 19, 2003 (68 FR 7947). The NPRM proposed to require you to inspect the pedestal leg assembly on aft facing passenger seats for correct configuration. If incorrectly configured, the NPRM proposed to require you to modify to the correct configuration.

Was the public invited to comment? The FAA encouraged interested persons to participate in the making of this amendment. We did not receive any comments on the proposed rule or on our determination of the cost to the public.

FAA's Determination

What is FAA's final determination on this issue? After careful review of all available information related to the subject presented above, we have determined that air safety and the public interest require the adoption of the rule as proposed except for minor editorial corrections. We have determined that these minor corrections:

—Provide the intent that was proposed in the NPRM for correcting the unsafe condition; and

—Do not add any additional burden upon the public than was already proposed in the NPRM.

What are the differences between this AD, the service information, and the FOCA AD? The FOCA AD and the service information require an inspection of the identification tag on certain passenger seats to determine if the Pilatus part number correctly corresponds to the ERDA vendor part number. The identification tag may incorrectly identify the Pilatus part number; although the ERDA vendor part number is correct. If the corresponding part numbers are incorrect, the FOCA AD and the service information require affixing a new identification tag with the correct corresponding Pilatus part number. The procedures for accomplishing this inspection and modification are contained in Decrane Aircraft, ERDA, Inc., Service Bulletin SB02011, Revision A, June 3, 2002.

Because the ERDA part number is correct, we are not including this as part of the unsafe condition. However, we will include a note in this AD recommending that you verify that the corresponding Pilatus part number is correct.

How does the revision to 14 CFR part 39 affect this AD? On July 10, 2002, FAA published a new version of 14 CFR part 39 (67 FR 47997, July 22, 2002), which governs FAA's AD system. This regulation now includes material that relates to special flight permits, alternative methods of compliance, and altered products. This material previously was included in each individual AD. Since this material is included in 14 CFR part 39, we will not include it in future AD actions.

How many airplanes does this AD impact? We estimate that this AD affects 280 airplanes in the U.S. registry.

What is the cost impact of this AD on owners/operators of the affected airplanes? We estimate the following costs to accomplish the inspection:

Labor cost	Parts cost	Total cost per airplane	Total cost on U.S. operators
1 workhour × $60 = $60	No parts required to perform inspection	$60	$60 × 280 = $16,800

We estimate the following costs to accomplish the modification:

Labor cost	Parts cost	Total cost per airplane	Total cost on U.S. operators
2 workhours × $60 = $120	$150	$270	$270 × 280 = $75,600

Compliance Time of This AD

What is the compliance time of this AD? The compliance time of this AD is ''within the next 90 days after the effective date of this AD.''

Why is the compliance time presented in calendar time instead of hours time-in-service (TIS)? The compliance of this AD is presented in calendar time instead of hours TIS because the unsafe condition is a result of an improper installation. The unsafe condition has the same chance of occurring on an airplane with 50 hours TIS as it is for an airplane with 1,000 hours TIS. Therefore, we believe that a compliance time of 90 days will:

—Ensure that the unsafe condition does not go undetected for a long period of time on the affected airplanes; and

—Not inadvertently ground any of the affected airplanes.

Regulatory Impact

Does this AD impact various entities? The regulations adopted herein will not have a substantial direct effect on the States, on the relationship between the national government and the States, or on the distribution of power and

responsibilities among the various levels of government. Therefore, it is determined that this final rule does not have federalism implications under Executive Order 13132.

Does this AD involve a significant rule or regulatory action? For the reasons discussed above, I certify that this action (1) is not a ''significant regulatory action'' under Executive Order 12866; (2) is not a ''significant rule'' under DOT Regulatory Policies and Procedures (44 FR 11034, February 26, 1979); and (3) will not have a significant economic impact, positive or negative, on a substantial number of small entities under the criteria of the Regulatory Flexibility Act. A copy of the final evaluation prepared for this action is contained in the Rules Docket. A copy of it may be obtained by contacting the Rules Docket at the location provided under the caption **ADDRESSES**.

List of Subjects in 14 CFR Part 39

Air transportation, Aircraft, Aviation safety, Incorporation by reference, Safety.

Adoption of the Amendment

■ Accordingly, under the authority delegated to me by the Administrator, the Federal Aviation Administration amends part 39 of the Federal Aviation Regulations (14 CFR part 39) as follows:

PART 39—AIRWORTHINESS DIRECTIVES

■ 1. The authority citation for part 39 continues to read as follows:

Authority: 49 U.S.C. 106(g), 40113, 44701.

§ 39.13 [Amended]

■ 2. FAA amends § 39.13 by adding a new AD to read as follows:

2003–09–11 Pilatus Aircraft LTD.: Amendment 39–13140; Docket No. 2003–CE–06–AD.

(a) *What airplanes are affected by this AD?* This AD affects Models PC–12 and PC–12/45 airplanes, manufacturer serial numbers (MSN) 101 through 436, that:

(1) Incorporate a passenger seat, ERDA Vendor Part Number (VPN) 403008–1 or 403008–2 (also identified as Pilatus Part Number (P/N) 959.30.01.601, 959.30.01.602, 959.30.01.613, or 959.30.01.614) (or FAA-approved equivalent part number), with a serial number as specified in Decrane Aircraft, ERDA, Inc., Service Bulletin SB02010, Revision A, June 3, 2002; and

(2) Are certificated in any category.

(b) *Who must comply with this AD?* Anyone who wishes to operate any of the airplanes identified in paragraph (a) of this AD must comply with this AD.

(c) *What problem does this AD address?* The actions specified by this AD are intended to detect and correct pedestal leg assemblies on aft facing passenger seats that are in nonconformance with manufacturing standards. Nonconforming passenger seats could result in passenger injury in an emergency situation.

(d) *What actions must I accomplish to address this problem?* To address this problem, you must accomplish the following, unless already accomplished:

Actions	Compliance	Procedures
(1) Inspect the forward pedestal legs on the aircraft aft facing passenger seat for correct configuration.	Within the next 90 days after June 16, 2003 (the effective date of this AD).	In accordance with Decrane Aircraft, ERDA, Inc., Service Bulletin SB02010, Revision A, June 3, 2002; as specified in Pilatus PC12 Service Bulletin No. 25–025, dated September 27, 2002.
(2) If the legs are incorrectly configured, modify to the correct configuration.	Prior to further inspection required in paragraph (d)(1) of this AD.	In accordance with Decrane flight after Aircraft, the ERDA, Inc., Service Bulletin SB02010, Revision A, June 3, 2002; as specified in Pilatus PC12 Service Bulletin No. 25–025, dated September 27, 2002.
(3) Do not install any affected seat specified in paragraph (a) of this AD unless it has been inspected as specified in paragraph (d)(1) of this AD and configured in accordance with Decrane Aircraft, ERDA, Inc., Service Bulletin SB02010, Revision A, June 3, 2002; as specified in Pilatus PC12 Service Bulletin No. 25–025, dated September 27, 2002.	As of June 16, 2003 (the effective date of this AD).	In accordance with Decrane Aircraft, ERDA, Inc., Service Bulletin SB02010, Revision A, June 3, 2002; as specified in Pilatus PC12 Service Bulletin No. 25–025, dated September 27, 2002.

Note 1: Although not required by this AD, we recommend that you verify that the Pilatus part number correctly corresponds with the ERDA vendor part number on certain passenger seats. The procedures for accomplishing this action are contained in Decrane Aircraft, ERDA, Inc., Service Bulletin SB02011, Revision A, June 3, 2002.

(e) *Can I comply with this AD in any other way?* To use an alternative method of compliance or adjust the compliance time, use the procedures in 14 CFR 39.19. Send these requests to the Manager, Standards Office, Small Airplane Directorate. For information on any already approved alternative methods of compliance, contact Doug Rudolph, Aerospace Engineer, FAA, Small Airplane Directorate, 901 Locust, Room 301, Kansas City, Missouri 64106; telephone: (816) 329–4059; facsimile: (816) 329–4090.

(f) *Are any service bulletins incorporated into this AD by reference?* Actions required by this AD must be done in accordance with Decrane Aircraft, ERDA, Inc., Service Bulletin SB02010, Revision A, June 3, 2002 (Annex B); as specified in Pilatus PC12 Service Bulletin No. 25–025, dated September 27, 2002 excluding Decrane Aircraft, ERDA, Inc, Service Bulletin SB0211, Revision A, dated June 3, 2002 (Annex A). The Director of the Federal Register approved this incorporation by reference under 5 U.S.C. 552(a) and 1 CFR part 51. You may get copies from Pilatus Aircraft Ltd., Customer Liaison Manager, CH–6371 Stans, Switzerland; telephone: +41 41 619 63 19; facsimile: +41 41 619 6224; or from Pilatus Business Aircraft Ltd., Product Support Department, 11755 Airport Way, Broomfield, Colorado 80021; telephone: (303) 465–9099; facsimile: (303) 465–6040. You may view copies at the FAA, Central Region, Office of the Regional Counsel, 901 Locust, Room 506, Kansas City, Missouri, or at the Office of the Federal Register, 800 North Capitol Street, NW., suite 700, Washington, DC.

Note 2: The subject of this AD is addressed in Swiss AD Number HB 2002–658, dated November 30, 2002.

(g) *When does this amendment become effective?* This amendment becomes effective on June 16, 2003.

Issued in Kansas City, Missouri, on April 23, 2003.

Dorenda D. Baker,

Acting Manager, Small Airplane Directorate, Aircraft Certification Service.

[FR Doc. 03–10510 Filed 5–1–03; 8:45 am]

BILLING CODE 4910–13–P

DEPARTMENT OF HOMELAND SECURITY

Coast Guard

33 CFR Part 117

[CGD01–03–031]

Drawbridge Operation Regulations: Mianus River, CT

AGENCY: Coast Guard, DHS.

ACTION: Notice of temporary deviation from regulations.

SUMMARY: The Commander, First Coast Guard District, has issued a temporary deviation from the drawbridge operation regulations for the Metro North Bridge, mile 1.0, across the Mianus River in Cos Cob, Connecticut. Under this temporary deviation a three-hour advance notice for bridge openings will be required from April 25, 2003 through May 26, 2003. This temporary deviation is necessary to facilitate structural repairs at the bridge.

DATES: This deviation is effective from April 25, 2003 through May 26, 2003.

FOR FURTHER INFORMATION CONTACT: Joseph Schmied, Project Officer, First Coast Guard District, at (212) 668–7195.

SUPPLEMENTARY INFORMATION: The Metro North Bridge has a vertical clearance in the closed position of 20 feet at mean high water and 27 feet at mean low water. The existing drawbridge operation regulations are listed at 33 CFR 117.209.

The bridge owner, Metro North Commuter Railroad, requested a temporary deviation from the drawbridge operation regulations to facilitate necessary maintenance, the replacement of damaged miter rails and timbers, at the bridge. The bridge must remain in the closed position to perform these repairs.

The Coast Guard coordinated this closure with the mariners who normally use this waterway to help facilitate this necessary bridge repair and to minimize any disruption to the marine transportation system.

Under this temporary deviation for the Metro North Bridge, a three-hour advance notice will be required for bridge openings from April 25, 2003 through May 26, 2003.

The bridge owner did not provide the required thirty-day notice to the Coast Guard for this deviation; however, this deviation was approved because the repairs are necessary repairs that must be performed without delay in order to assure the continued safe reliable operation of the bridge.

This deviation from the operating regulations is authorized under 33 CFR 117.35, and will be performed with all due speed in order to return the bridge to normal operation as soon as possible.

Dated: April 21, 2003.

John L. Grenier,

Captain, Coast Guard, Acting Commander, First Coast Guard District.

[FR Doc. 03–10831 Filed 5–1–03; 8:45 am]

BILLING CODE 4910–15–P

DEPARTMENT OF HOMELAND SECURITY

Coast Guard

33 CFR Part 165

[CGD13–03–012]

RIN 1625–AA00

Security and Safety Zone: Protection of Large Passenger Vessels, Portland, OR

AGENCY: Coast Guard, DHS.

ACTION: Temporary final rule; request for comments.

SUMMARY: Increases in the Coast Guard's maritime security posture necessitate establishing temporary regulations for the safety and security of large passenger vessels in the navigable waters of the Portland, OR Captain of the Port zone. This security zone will provide for the regulation of vessel traffic in the vicinity of large passenger vessels.

DATES: This regulation is effective March 12, 2003, until September 12, 2003. Comments and related material must reach the Coast Guard on or before June 2, 2003.

ADDRESSES: You may mail comments and related material to Marine Safety Office/Group Portland, 6767 North Basin Ave, Portland, OR, 97217. Marine Safety Office Portland maintains the public docket [CGD13–03–012] for this rulemaking. Comments and material received from the public, as well as documents indicated in this preamble as being available in the docket, will become part of this docket and will be available for inspection or copying at Marine Safety Office Portland between 7 a.m. and 4 p.m., Monday through Friday, except Federal holidays.

FOR FURTHER INFORMATION CONTACT: LTJG Tad Drozdowski, c/o Captain of the Port Portland, 6767 North Basin Ave, Portland, OR, (503) 240–2584.

SUPPLEMENTARY INFORMATION:

Request for Comments

We encourage you to participate in this rulemaking by submitting comments and related material. If you do so, please include your name and address, identify the docket number for this rulemaking [CGD13–03–012], indicate the specific section of this document to which each comment applies, and give the reason for each comment. Please submit all comments and related material in an unbound format, no larger than 8½ by 11 inches, suitable for copying. If you would like to know they reached us, please enclose a stamped, self-addressed postcard or envelope. We will consider all comments and material received during the comment period. We may change this temporary final rule in view of them.

Regulatory Information

We did not publish a notice of proposed rulemaking (NPRM) for this regulation. Under 5 U.S.C. 553(b)(B) and 5 U.S.C. 553(d)(3), the Coast Guard finds that good cause exists for not publishing an NPRM and for making this rule effective less than 30 days after publication in the **Federal Register**. Publishing a NPRM would be contrary to public interest since immediate action is necessary to safeguard large passenger vessels from sabotage, other subversive acts, or accidents. If normal notice and comment procedures were followed, this rule would not become effective soon enough to provide immediate protection to large passenger vessels from the threats posed by hostile entities and would compromise the vital national interest in protecting maritime transportation and commerce. The security and safety zone in this regulation has been carefully designed to minimally impact the public while providing a reasonable level of protection for large passenger vessels. For these reasons, following normal rulemaking procedures in this case would be impracticable, unnecessary, and contrary to the public interest.

Background and Purpose

Recent events highlight the fact that there are hostile entities operating with the intent to harm U.S. National Security. The President has continued the national emergencies he declared following the September 11, 2001 terrorist attacks (67 FR 58317 (Sept. 13, 2002) (continuing national emergency with respect to terrorist attacks)), 67 FR 59447 (Sept. 20, 2002) (continuing national emergency with respect to persons who commit, threaten to commit or support terrorism)). The President also has found pursuant to law, including the Act of June 15, 1917, as amended August 9, 1950, by the Magnuson Act (50 U.S.C. 191 *et. seq.*),

that the security of the United States is and continues to be endangered following the attacks (E.O. 13,273, 67 FR 56215 (Sept. 3, 2002) (security endangered by disturbances in international relations of U.S. and such disturbances continue to endanger such relations)).

The Coast Guard, through this action, intends to assist large passenger vessels by establishing a security and safety zone to exclude persons and vessels from the immediate vicinity of all large passenger vessels. Entry into this zone will be prohibited unless authorized by the Captain of the Port or his designee. The Captain of the Port may be assisted by other federal, state, or local agencies.

Discussion of Rule

This rule, for safety and security concerns, controls vessel movement in a regulated area surrounding large passenger vessels. For the purpose of this regulation, a large passenger vessel means any vessel over 100 feet in length (33 meters) carrying passengers for hire including, but not limited to, cruise ships, auto ferries, passenger ferries, and excursion vessels. All vessels within 500 yards of large passenger vessels shall operate at the minimum speed necessary to maintain a safe course, and shall proceed as directed by the official patrol. No vessel, except a public vessel (defined below), is allowed within 100 yards of a large passenger vessel, unless authorized by the on-scene official patrol or large passenger vessel master. Vessels requesting to pass within 100 yards of a large passenger vessel shall contact the on-scene official patrol or large passenger vessel master on VHF–FM channel 16 or 13. The on-scene official patrol or large passenger vessel master may permit vessels that can only operate safely in a navigable channel to pass within 100 yards of a large passenger vessel in order to ensure a safe passage in accordance with the Navigation Rules. Similarly, commercial vessels anchored in a designated anchorage area may be permitted to remain at anchor within 100 yards of passing large passenger vessels. Public vessels for the purpose of this Temporary Final Rule are vessels owned, chartered, or operated by the United States, or by a State or political subdivision thereof.

Regulatory Evaluation

This rule is not a ''significant regulatory action'' under section 3(f) of Executive Order 12866 and does not require an assessment of potential costs and benefits under section 6(a)(3) of that Order. The Office of Management and Budget has not reviewed it under that Order. It is not ''significant'' under the regulatory policies and procedures of the Department of Homeland Security (DHS).

We expect the economic impact of this proposed rule to be so minimal that a full Regulatory Evaluation under paragraph 10e of the regulatory policies and procedures of DHS is unnecessary.

Although this regulation restricts access to the regulated area, the effect of this regulation will not be significant because: (i) Individual large passenger vessel security and safety zones are limited in size; (ii) the on-scene official patrol or large passenger vessel master may authorize access to the large passenger vessel security and safety zone; (iii) the large passenger vessel security and safety zone for any given transiting large passenger vessel will effect a given geographical location for a limited time; and (iv) the Coast Guard will make notifications via maritime advisories so mariners can adjust their plans accordingly.

Small Entities

Under the Regulatory Flexibility Act (5 U.S.C. 601–612), we have considered whether this rule would have a significant economic impact on a substantial number of small entities. The term ''small entities'' includes small businesses, not-for-profit organizations that are independently owned and operated and are not dominant in their fields, and governmental jurisdictions with populations of less than 50,000.

The Coast Guard certifies under 5 U.S.C. 605(b) that this rule will not have a significant economic impact on a substantial number of small entities.

This rule may affect the following entities, some of which may be small entities: the owners or operators of vessels intending to operate near or anchor in the vicinity of large passenger vessels in the navigable waters of the United States to which this rule applies.

This temporary regulation will not have a significant economic impact on a substantial number of small entities for the following reasons: (i) Individual large passenger vessel security and safety zones are limited in size; (ii) the on-scene official patrol or large passenger vessel master may authorize access to the large passenger vessel security and safety zone; (iii) the passenger vessel security and safety zone for any given transiting large passenger vessel will affect a given geographic location for a limited time; and (iv) the Coast Guard will make notifications via maritime advisories so mariners can adjust their plans accordingly.

Assistance for Small Entities

Under section 213(a) of the Small Business Regulatory Enforcement Fairness Act of 1996 (Pub. L. 104–121), we want to assist small entities in understanding this proposed rule so that they can better evaluate its effects on them and participate in the rulemaking. If the rule would affect your small business, organization, or governmental jurisdiction and you have questions concerning its provisions or options for compliance, please contact one of the points of contact listed under **FOR FURTHER INFORMATION CONTACT**.

Small businesses may send comments on the actions of Federal employees who enforce, or otherwise determine compliance with, Federal regulations to the Small Business and Agriculture Regulatory Enforcement Ombudsman and the Regional Small Business Regulatory Fairness Boards. The Ombudsman evaluates these actions annually and rates each agency's responsiveness to small business. If you wish to comment on actions by employees of the Coast Guard, call 1–888–REG–FAIR (1–888–734–3247).

Collection of Information

This rule calls for no new collection of information under the Paperwork Reduction Act of 1995 (44 U.S.C. 3501–3520).

Federalism

A rule has implications for federalism under Executive Order 13132, Federalism, if it has a substantial direct effect on State or local governments and would either preempt State law or impose a substantial direct cost of compliance on them. We have analyzed this rule under that Order and have determined that it does not have implications for federalism.

Unfunded Mandates Reform Act

The Unfunded Mandates Reform Act of 1995 (2 U.S.C. 1531–1538) requires Federal agencies to assess the effects of their discretionary regulatory actions. In particular, the Act addresses actions that may result in the expenditure by a State, local, or tribal government, in the aggregate, or by the private sector of $100,000,000 or more in any one year. Though this rule will not result in such an expenditure, we do discuss the effects of this rule elsewhere in this preamble.

Taking of Private Property

This rule will not effect a taking of private property or otherwise have taking implications under Executive Order 12630, Governmental Actions and

Interference with Constitutionally Protected Property Rights.

Civil Justice Reform

This rule meets applicable standards in sections 3(a) and 3(b)(2) of Executive Order 12988, Civil Justice Reform, to minimize litigation, eliminate ambiguity, and reduce burden.

Protection of Children

We have analyzed this rule under Executive Order 13045, Protection of Children from Environmental Health Risks and Safety Risks. This rule is not an economically significant rule and does not create an environmental risk to health or risk to safety that may disproportionately affect children.

Indian Tribal Governments

The Coast Guard recognizes the rights of Native American Tribes under the Stevens Treaties. Moreover, the Coast Guard is committed to working with Tribal Governments to implement local policies to mitigate tribal concerns. Given the flexibility of the Temporary Final Rule to accommodate the special needs of mariners in the vicinity of large passenger vessels and the Coast Guard's commitment to working with the Tribes, we have determined that passenger vessel security and fishing rights protection need not be incompatible and therefore have determined that this Temporary Final Rule does not have tribal implications under Executive Order 13175, Consultation and Coordination with Indian Tribal Governments, because it does not have a substantial direct effect on one or more Indian tribes, on the relationship between the Federal Government and Indian tribes, or on the distribution of power and responsibilities between the Federal Government and Indian tribes. Nevertheless, Indian Tribes that have questions concerning the provisions of this Temporary Final Rule or options for compliance are encouraged to contact the point of contact listed under **FOR FURTHER INFORMATION CONTACT**.

Energy Effects

We have analyzed this rule under Executive Order 13211, Actions Concerning Regulations That Significantly Affect Energy Supply, Distribution, or Use. We have determined that it is not a ''significant energy action'' under that order because it is not a ''significant regulatory action'' under Executive Order 12866 and is not likely to have a significant adverse effect on the supply, distribution, or use of energy. The Administrator of the Office of Information and Regulatory Affairs has not designated it as a significant energy action. Therefore, it does not require a Statement of Energy Effects under Executive Order 13211.

Environment

The Coast Guard's preliminary review indicates this temporary rule is categorically excluded from further environmental documentation under figure 2–1, paragraph 34(g) of Commandant Instruction M16475.lD. As an emergency action, the Environmental Analysis, requisite regulatory consultations, and Categorical Exclusion Determination will be prepared and submitted after establishment of this temporary passenger vessel security zone, and will be available in the docket. This temporary rule ensures the safety and security of large passenger vessels. All standard environmental measures remain in effect. The Categorical Exclusion Determination will be made available in the docket for inspection or copying where indicated under **ADDRESSES.**

List of Subjects in 33 CFR Part 165

Harbors, Marine safety, Navigation (water), Reporting and recordkeeping requirements, Security measures, Waterways.

■ For the reasons discussed in the preamble, the Coast Guard amends 33 CFR part 165 as follows:

PART 165—REGULATED NAVIGATION AREAS AND LIMITED ACCESS AREAS

■ 1. The authority citation for part 165 continues to read as follows:

Authority: 33 U.S.C. 1231; 50 U.S.C. 191; 33 CFR 1.05–1(g), 6.04–1, 6.04–6 and 160.5; Department of Homeland Security Delegation No. 0170.

■ 2. From March 12, 2003, until September 12, 2003, temporary § 165.T13–006 is added to read as follows:

§ 165.T13–006 Security and Safety Zone, Large Passenger Vessel Protection, Portland, OR

(a) The following definitions apply to this section:

Federal Law Enforcement Officer means any employee or agent of the United States government who has the authority to carry firearms and make warrantless arrests and whose duties involve the enforcement of criminal laws of the United States.

Large passenger vessel means any vessel over 100 feet in length (33 meters) carrying passengers for hire including, but not limited to, cruise ships, auto ferries, passenger ferries, and excursion vessels.

Large passenger vessel security and safety zone is a regulated area of water, established by this section, surrounding large passenger vessels for a 500 yard radius, that is necessary to provide for the security and safety of these vessels.

Navigable waters of the United States means those waters defined as such in 33 CFR part 2.

Navigation Rules means the Navigation Rules, International-Inland.

Official patrol means those persons designated by the Captain of the Port to monitor a large passenger vessel security and safety zone, permit entry into the zone, give legally enforceable orders to persons or vessels within the zone and take other actions authorized by the Captain of the Port. Persons authorized to enforce this section are designated as the Official Patrol.

Oregon Law Enforcement Officer means any Oregon Peace Officer as defined in Oregon Revised Statutes § 161.015.

Public vessel means vessels owned, chartered, or operated by the United States, or by a State or political subdivision thereof.

Washington Law Enforcement Officer means any General Authority Washington Peace Officer, Limited Authority Washington Peace Officer, or Specially Commissioned Washington Peace Officer as defined in Revised Code of Washington section 10.93.020.

(b) Security and safety zone. There is established a large passenger vessel security and safety zone extending for a 500 yard radius around all large passenger vessels located in the navigable waters of the United States, in Portland, OR beginning at the Columbia River Bar ''C'' buoy extending eastward on the Columbia River to Kennewick, WA and upriver through Lewiston, ID on the Snake River.

(c) The large passenger vessel security and safety zone established by this section remains in effect at all times, whether the large passenger vessel is underway, anchored, or moored.

(d) The Navigation Rules shall apply at all times within a large passenger vessel security and safety zone.

(e) All vessels within a large passenger vessel security and safety zone shall operate at the minimum speed necessary to maintain a safe course and shall proceed as directed by the on-scene official patrol or large passenger vessel master. No vessel or person is allowed within 100 yards of a large passenger vessel, unless authorized by the on-scene official patrol or large passenger vessel master.

(f) To request authorization to operate within 100 yards of a large passenger vessel, contact the on-scene official patrol or large passenger vessel master on VHF–FM channel 16 or 13.

(g) When conditions permit, the on-scene official patrol or large passenger vessel master should:

(1) Permit vessels constrained by their navigational draft or restricted in their ability to maneuver to pass within 100 yards of a large passenger vessel in order to ensure a safe passage in accordance with the Navigation Rules; and

(2) Permit commercial vessels anchored in a designated anchorage area to remain at anchor within 100 yards of a passing large passenger vessel; and

(3) Permit vessels that must transit via a navigable channel or waterway to pass within 100 yards of a moored or anchored large passenger vessel with minimal delay consistent with security.

(h) When a large passenger vessel approaches within 100 yards of a vessel that is moored, or anchored in a designated anchorage, the stationary vessel must stay moored or anchored while it remains within the large passenger vessel's security and safety zone unless it is either ordered by, or given permission by the Captain of the Port Portland, his designated representative or the on-scene official patrol to do otherwise.

(i) Exemption. Public vessels as defined in paragraph (a) in this section are exempt from complying with paragraphs (e), (f), (g), (h), (j), and (k) of this section.

(j) Enforcement. Any Coast Guard commissioned, warrant or petty officer may enforce the rules in this section. When immediate action is required and representatives of the Coast Guard are not present or not present in sufficient force to exercise effective control in the vicinity of a large passenger vessel, any Federal Law Enforcement Officer, Oregon Law Enforcement Officer or Washington Law Enforcement Officer may enforce the rules contained in this section pursuant to 33 CFR 6.04–11. In addition, the Captain of the Port may be assisted by other federal, state or local agencies in enforcing this section.

(k) Waiver. The Captain of the Port Portland may waive any of the requirements of this section for any vessel or class of vessels upon finding that a vessel or class of vessels, operational conditions or other circumstances are such that application of this section is unnecessary or impractical for the purpose of port security, safety or environmental safety.

Dated: March 26, 2003.

Paul D. Jewell,

Captain, Coast Guard, Captain of the Port, Portland.

[FR Doc. 03–10832 Filed 5–1–03; 8:45 am]

BILLING CODE 4910–15–P

DEPARTMENT OF HOMELAND SECURITY

Coast Guard

33 CFR Part 165

[CGD08–03–014]

RIN 1625–AA11

Regulated Navigation Area; Reporting Requirements for Barges Loaded With Certain Dangerous Cargoes, Inland Rivers, Eighth Coast Guard District

AGENCY: Coast Guard, DHS.

ACTION: Temporary final rule; request for comments.

SUMMARY: The Coast Guard is establishing a regulated navigation area (RNA) within all inland rivers of the Eighth Coast Guard District. This RNA applies to barges loaded with certain dangerous cargoes (CDCs) operating on inland rivers and requires them to report their position and other information to the Inland River Vessel Movement Center (IRVMC). This action is necessary to ensure public safety, prevent sabotage or terrorist acts, and facilitate the efforts of emergency services and law enforcement officers responding to terrorist attacks.

DATES: This rule is effective on April 16, 2003 through October 31, 2003.

ADDRESSES: You may mail comments and related material to Commander, Eighth Coast Guard District (m), Hale Boggs Federal Bldg., 501 Magazine Street, New Orleans LA 70130. Commander, Eighth Coast Guard District (m) maintains the public docket for this rulemaking. Comments and material received from the public, as well as documents indicated in this preamble as being available in the docket, are part of docket CGD08–03–014 and are available for inspection or copying at Commander, Eighth Coast Guard District (m), Hale Boggs Federal Bldg., 501 Magazine Street, New Orleans LA 70130 between 8 a.m. and 3:30 p.m., Monday through Friday, except Federal holidays.

FOR FURTHER INFORMATION CONTACT: Commander (CDR) Jerry Torok or Lieutenant (LT) Karrie Trebbe, Project Managers for the Eighth Coast Guard District Commander, Hale Boggs Federal Bldg., 501 Magazine Street, New Orleans LA 70130, telephone (504) 589–6271.

SUPPLEMENTARY INFORMATION:

Regulatory Information

We did not publish a notice of proposed rulemaking (NPRM) for this regulation. Under 5 U.S.C. 553(b), the Coast Guard finds that good cause exists for not publishing a NPRM, and under 5 U.S.C. 553(d)(3), good cause exists for making this rule effective less than 30 days after publication in the **Federal Register**. The Maritime Administration (MARAD) recently issued MARAD Advisory 03–03 (182100Z MAR 03) informing operators of maritime interests of increased threat possibilities to vessels and facilities and a higher risk of terrorist attacks to the transportation community in the United States. Further, national security and intelligence officials warn that future terrorist attacks against United States interests are likely. The measures contemplated by the rule are intended to prevent waterborne acts of sabotage or terrorism, which terrorists have demonstrated a capability to carry out. Any delay in making this regulation effective would be contrary to the public interest because immediate action is necessary to protect U.S. maritime transportation interests against the possible loss of life, injury, or damage to property.

Request for Comments

We encourage you to participate in this rulemaking by submitting comments and related material. We encourage comments on whether a Regulated Navigation Area is the appropriate tool for a long-term solution to the security risk at issue. If you do so, please include your name and address, identify the docket number for this rulemaking [CGD08–03–014], indicate the specific section of this document to which each comment applies, and give the reason for each comment. Please submit all comments and related material in an unbound format, no larger than 81/2 by 11 inches, suitable for copying. If you would like to know they reached us, please enclose a stamped, self-addressed postcard or envelope. We will consider all comments and material received during the comment period. We may change this rule in view of them.

Public Meeting

We do not now plan to hold a public meeting. But you may submit a request for a meeting by writing to Commander, Eighth Coast Guard District (m) at the address under **ADDRESSES** explaining why one would be beneficial. If we determine that one would aid this rulemaking, we will hold one at a time and place announced by a later notice in the **Federal Register**.

Background and Purpose

Terrorist attacks on September 11, 2001 inflicted catastrophic human

casualties and property damage. These attacks highlighted the terrorists' ability and desire to utilize multiple means in different geographic areas to increase their opportunities to successfully carry out their mission, thereby maximizing destruction using multiple terrorist acts.

Since the September 11, 2001 terrorist attacks on the World Trade Center in New York, the Pentagon in Arlington, Virginia and Flight 93, the Federal Bureau of Investigation (FBI) has issued several warnings concerning the potential for additional terrorist attacks within the United States. The threat of maritime attacks is real as evidenced by the October 2002 attack on a tank vessel off the coast of Yemen and the prior attack on the USS COLE. These attacks manifest a continuing threat to U.S. assets as described in the President's finding in Executive Order 13273 of August 21, 2002 (67 FR 56215, September 3, 2002) that the security of the U.S. is endangered by the September 11, 2001 attacks and that such disturbances continue to endanger the international relations of the United States. *See also Continuation of the National Emergency with Respect to Certain Terrorist Attacks,* (67 FR 58317, September 13, 2002); Continuation of the National Emergency With Respect To Persons Who Commit, Threaten To Commit, Or Support Terrorism, (67 FR 59447, September 20, 2002). The U.S. Maritime Administration (MARAD) in Advisory 02–07 advised U.S. shipping interests to maintain a heightened state of alert against possible terrorist attacks. MARAD more recently issued Advisory 03–03 informing operators of maritime interests of increased threat possibilities to vessels and facilities and a higher risk of terrorist attacks to the transportation community in the United States. The ongoing hostilities in Afghanistan and Iraq have made it prudent for U.S. ports and waterways to be on a higher state of alert because the Al Qaeda organization and other similar organizations have declared an ongoing intention to conduct armed attacks on U.S. interests worldwide.

Therefore, the Coast Guard is establishing an RNA within the inland rivers of the Eighth Coast Guard District in order to safeguard vessels, ports and waterfront facilities from sabotage or terrorist acts. This RNA applies to barges loaded with CDCs operating on the Mississippi River above mile 235.0, Above Head of Passes, including all its tributaries; the Atchafalaya River above mile 55.0 including the Red River; the Ohio River and all its tributaries; and the Tennessee River from its confluence with the Ohio River to mile zero on the Mobile River and all other tributaries between these two rivers. This RNA affects vessels that transport CDCs that if used as a weapon of terrorism could result in substantial loss of life, property and environmental damage, and grave economic consequences. This rulemaking requires operators, as defined in this rule, of barges loading or loaded with CDCs within the RNA to periodically report their position and other specified information to the Inland River Vessel Movement Center (IRVMC) for protection against sabotage and terrorist acts.

If additional information warrants modifying or amending this rule, we will revise the rule and publish the revision in the **Federal Register**.

Discussion of Rule

This rule applies to operators of a barge loaded with or loading CDCs, within the regulated area. This rule does not apply to operators of ''empty'' barges within the RNA. The terms barge, certain dangerous cargoes (CDCs), downbound, CDC barge, Eighth Coast Guard District, empty, final destination, gas free, loaded, operator, and upbound are defined in the regulatory section of this rule. The operator, of a CDC barge(s) loaded with or being loaded with CDCs must report to the IRVMC specific information under the following conditions: 4 hours prior to loading a barge(s) with CDCs; 4 hours prior to dropping off a CDC barge(s) in a fleeting area; 4 hours prior to picking up a CDC barge(s) from a fleeting area; 4 hours prior to getting underway with a CDC barge(s); upon point of entry into the RNA with a CDC barge(s); at designated reporting points in Table 165.T08–019(f); when the estimated time of arrival (ETA) to a reporting point varies by 6 hours from the previously reported ETA; any significant deviation from previously reported information; upon arrival at the ''final'' destination with a CDC barge(s), if within the RNA; upon departing the RNA with a CDC barge(s); and when directed by the IRVMC.

Each report to the IRVMC must contain all the information items specified in Table 165.T08–019(g). Reports must be made to the IRVMC, either by telephone toll free to (866) 442–6089, by fax toll free to (866) 442–6107, or by e-mail to *irvmc@cgstl.uscg.mil*.

Deviation from this rule is prohibited unless specifically authorized by the Commander, Eighth Coast Guard District or designated representatives. In addition to 33 U.S.C. 1231 and 50 U.S.C. 191, the authority for this section includes 33 U.S.C. 1226.

Regulatory Evaluation

This rule is not a ''significant regulatory action'' under section 3(f) of Executive Order 12866, Regulatory Planning and Review, and does not require an assessment of potential costs and benefits under section 6(a)(3) of that Order. The Office of Management and Budget has not reviewed it under that Order. It is not ''significant'' under the regulatory policies and procedures of the Department of Homeland Security. The operational reporting requirements of the RNA are minimal, transitory and necessary to provide immediate, improved security for the public, vessels, and U.S. ports and waterways. The requirements do not alter normal barge cargo loading operations or transits. Additionally, this RNA is temporary in nature and the Coast Guard may issue a NPRM as it considers whether to make this rule permanent. The minimal hardships that may be experienced by persons or vessels, as a result of this rule, are necessary to the national interest in protecting the public, vessels, and vessel crews from the devastating consequences of acts of terrorism, and from sabotage or other subversive acts, accidents, or other causes of a similar nature.

Small Entities

Under the Regulatory Flexibility Act (5 U.S.C. 601–612), we have considered whether this rule would have a significant economic impact on a substantial number of small entities. The term ''small entities'' comprises small businesses, not-for-profit organizations that are independently owned and operated and are not dominant in their fields, and governmental jurisdictions with populations of less than 50,000.

The Coast Guard certifies under 5 U.S.C. 605(b) that this rule will not have a significant economic impact on a substantial number of small entities. This rule will affect the following entities, some of which may be small entities: the operators of barges intending to load CDCs and transit on inland waterways with CDC barge(s) within the Eighth Coast Guard District. This RNA will not have a significant economic impact on a substantial number of small entities because this rule does not require any alteration of barge operations or transits. The operational communications required by this RNA are transitory in nature and do not require operators to obtain new equipment.

If you are a small business entity and are significantly affected by the regulation please contact LT Karrie C.

Trebbe, Project Manager for Eighth Coast Guard District Commander, Hale Boggs Federal Bldg., 501 Magazine Street, New Orleans LA 70130, telephone (504) 589–6271.

Assistance for Small Entities

Under subsection 213(a) of the Small Business Regulatory Enforcement Fairness Act of 1996 [Pub. L. 104–121], we offered to assist small entities in understanding the rule so that they can better evaluate its effects on them and participate in the rulemaking process. Small businesses may send comments on the actions of Federal employees who enforce, or otherwise determine compliance with, Federal regulations to the Small Business and Agriculture Regulatory Enforcement Ombudsman and the Regional Small Business Regulatory Fairness Boards. The Ombudsman evaluates these actions annually and rates each agency's responsiveness to small business. If you wish to comments on actions by employees of the Coast Guard, call 1–888–REG–FAIR (1–888–734–3247).

Collection of Information

This rule calls for new collection of information under the Paperwork Reduction Act of 1995 (44 U.S.C. 3501–3520). As defined in 5 CFR 1320.3(c), ''collection of information'' comprises reporting, recordkeeping, monitoring, posting, labeling, and other, similar actions. The title and description of the information collection, a description of those who must collect the information, and an estimate of the total annual burden follow. The estimate covers the time for reviewing instructions, searching existing sources of data, gathering and maintaining the data needed, and completing and reviewing the collection.

Title: Regulated Navigation Areas; Reporting Requirements for Barges Loaded with Certain Dangerous Cargoes, Inland Rivers, Eighth and Ninth Coast Guard Districts.

OMB Control Number: 1625–0105.

Summary of the Collection of Information: The Coast Guard requires position and intended movement reporting, and cargo transfer and fleeting operations reporting, from barges carrying CDCs in the inland rivers within the Eighth and Ninth Coast Guard Districts. This rule will amend 33 CFR part 165 to temporarily require:

Owners and operators of covered barges must report the following information via toll free telephone, toll free fax, or email:

a. Name of barge and towboat;

b. Name of loading, fleeting, and terminal facility;

c. Estimated time of arrival (ETA) at loading, fleeting and terminal facility;

d. Planned route, including estimated time of departure (ETD) from loading, fleeting, and terminal facility;

e. 4 hours prior to loading covered dangerous cargoes;

f. 4 hours prior to dropping off a covered barge in a fleeting area;

g. 4 hours prior to picking up a covered barge from a fleeting area;

h. 4 hours prior to getting underway with a covered barge;

i. At entry into the covered geographical area;

j. ETA at approximately 148 designated reporting points within the covered geographical area;

k. At any time ETA to a reporting point varies by 6 hours from the previously reported ETA;

l. any significant deviation from previously reported information;

m. Upon arrival at the ''final'' destination with a covered barge, if within the covered geographical area;

n. Upon departing the covered geographical area; and

o. When directed by the Coast Guard.

The temporary changes will be in effect though October 31, 2003.

Need for Information: To ensure port safety and security and to ensure the uninterrupted flow of commerce, the Coast Guard must temporarily issue regulations requiring position and intended movement reporting, and cargo transfer and fleeting operations reporting, from barges carrying CDCs in the inland rivers within the Eighth and Ninth Coast Guard Districts.

Proposed use of Information: This information is required to enhance maritime security, control vessel traffic, develop contingency plans, and enforce regulations.

Description of the Respondents: The respondents are owners, agents, masters, operators, or persons in charge of barges loaded with certain dangerous cargoes operating on the inland rivers located within the Eighth and Ninth Coast Guard Districts.

Number of Respondents: The existing OMB-approved collection number of respondents is zero(0). This temporary rule will increase the number of respondents by 3,505 to a total of 3,505.

Frequency of Response: The existing OMB-approved collection annual number of responses is zero(0). This temporary rule will increase the number of responses by 7,711 to a total of 7,711.

Burden of Response: The existing OMB-approved collection burden of response is zero (0). This temporary rule will increase the burden of response by 15 minutes (0.250 hours) to a total of 15 minutes (0.250 hours).

Estimate of Total Annual Burden: The existing OMB-approved collection total annual burden is zero (0). This temporary rule will increase the total annual burden by 1,928 hours to a total of 1,928 hours.

As required by the Paperwork Reduction Act of 1995 (44 U.S.C. 3507(d)), we submitted a copy of this rule to the Office of Management and Budget (OMB) for its review of the collection of information. Due to the circumstances surrounding this temporary rule, we asked for ''emergency processing'' of our request. We received OMB approval for the collection of information on April 15, 2003. It is valid through October 31, 2003.

We ask for public comment on the collection of information to help us determine how useful the information is; whether it can help us perform our functions better; whether it is readily available elsewhere; how accurate our estimate of the burden of collection is; how valid our methods for determining burden are; how we can improve the quality, usefulness, and clarity of the information; and how we can minimize the burden of collection.

If you submit comments on the collection of information, submit them both to OMB and to the Docket Management Facility where indicated under **ADDRESSES**, by the date under **DATES**.

You need not respond to a collection of information unless it displays a currently valid control number from OMB. We received OMB approval for the collection of information on April 15, 2003. It is valid through October 31, 2003.

Federalism

A rule has implications for federalism under Executive Order 13132, Federalism, if it has a substantial direct effect on State or local governments and would either preempt State law or impose a substantial direct cost of compliance on them. We have analyzed this rule under that Order and have determined that it does not have implications for federalism.

Unfunded Mandates Reform Act

The Unfunded Mandates Reform Act of 1995 (2 U.S.C. 1531–1538) requires Federal agencies to assess the effects of their discretionary regulatory actions. In particular, the Act addresses actions that may result in the expenditure by a State, local, or tribal government, in the aggregate, or by the private sector of $100,000,000 or more in any one year. Though this rule will not result in such an expenditure, we do discuss the

effects of this rule elsewhere in this preamble.

Taking of Private Property

This rule will not effect a taking of private property or otherwise have taking implications under Executive Order 12630, Governmental Actions and Interference with Constitutionally Protected Property Rights.

Civil Justice Reform

This rule meets applicable standards in sections 3(a) and 3(b)(2) of Executive Order 12988, Civil Justice Reform, to minimize litigation, eliminate ambiguity, and reduce burden.

Protection of Children

We have analyzed this rule under Executive Order 13045, Protection of Children from Environmental Health Risks and Safety Risks. This rule is not an economically significant rule and does not create an environmental risk to health or risk to safety that may disproportionately affect children.

Indian Tribal Governments

This rule does not have tribal implications under Executive Order 13175, Consultation and Coordination with Indian Tribal Governments, because it does not have a substantial direct effect on one or more Indian tribes, on the relationship between the Federal Government and Indian tribes, or on the distribution of power and responsibilities between the Federal Government and Indian tribes.

Energy Effects

We have analyzed this rule under Executive Order 13211, Actions Concerning Regulations That Significantly Affect Energy Supply, Distribution, or Use. We have determined that it is not a ''significant energy action'' under that order because it is not a ''significant regulatory action'' under Executive Order 12866 and is not likely to have a significant adverse effect on the supply, distribution, or use of energy. The Administrator of the Office of Information and Regulatory Affairs has not designated it as a significant energy action. Therefore, it does not require a Statement of Energy Effects under Executive Order 13211.

Environment

We have analyzed this rule under Commandant Instruction M16475.1D, which guides the Coast Guard in complying with the National Environmental Policy Act of 1969 (NEPA) (42 U.S.C. 4321–4370f), and have concluded that there are no factors in this case that would limit the use of categorical exclusion under section 2.B.2 of the Instruction. Therefore, this rule is categorically excluded, under figure 2–1 paragraph (34)(g), of the instruction, from further environmental documentation because this rule is not expected to result in any significant environmental impact as described in NEPA. A final ''Environmental Analysis Check List'' and a final ''Categorical Exclusion Determination'' are available where indicated under **ADDRESSES.**

List of Subjects in 33 CFR Part 165

Harbors, Marine safety, Navigation (water), Reporting and recordkeeping requirements, Security measures, Vessels, Waterways.

■ For the reasons discussed in the preamble, the Coast Guard amends 33 CFR part 165 as follows:

PART 165—REGULATED NAVIGATION AREAS AND LIMITED ACCESS AREAS

■ 1. The authority citation for part 165 continues to read as follows:

Authority: 33 U.S.C. 1231; 50 U.S.C. 191, 33 CFR 1.05–1(g), 6.04–1, 6.04–6, and 160.5; Department of Homeland Security Delegation No. 0170.

■ 2. Add temporary § 165.T08–019 to read as follows:

§ 165.T08–019 Regulated Navigation Area; Reporting Requirements for Barges Loaded with Certain Dangerous Cargoes, Inland Rivers, Eighth Coast Guard District.

(a) *Regulated Navigation Area.* The following waters are a Regulated Navigation Area (RNA): Mississippi River above mile 235.0, Above Head of Passes, including all its tributaries; the Atchafalaya River above mile 55.0 including the Red River; the Ohio River and all its tributaries; and the Tennessee River from its confluence with the Ohio River to mile zero on the Mobile River and all other tributaries between these two rivers.

(b) *Applicability.* This section applies to operators of barges loading or loaded with certain dangerous cargoes (CDCs) within the Regulated Navigation Area. This section does not apply to operators of ''empty'' CDC barges, as defined in the definitions section.

(c) *Definitions.* As used in this section:

Barge means a non-self propelled vessel engaged in commerce, as set out in 33 CFR 160. 204, published February 28, 2003 in *Notification of Arrival in U.S. Ports*, (68 FR 9537, 9544).

Certain Dangerous Cargoes (CDCs) includes any of the following:

(1) Division 1.1 or 1.2 explosives as defined in 49 CFR 173.50, and that is in a quantity in excess of 100 metric tons per barge.

(2) Division 1.5D blasting agents for which a permit is required under 49 CFR 176.415 or, for which a permit is required as a condition of a Research and Special Programs Administration (RSPA) exemption, and that is in a quantity in excess of 100 metric tons per barge.

(3) Division 2.3 ''poisonous gas'', as listed in 49 CFR 172.101 that is also a ''material poisonous by inhalation'' as defined in 49 CFR 171.8, and that is in a quantity in excess of 1 metric ton per barge.

(4) Division 5.1 ''Ammonium Nitrate and Certain Ammonium Nitrate Fertilizers'' for which a permit is required under 49 CFR 176.415, or for which a permit is required as a condition of a RSPA exemption, and that is in a quantity in excess of 100 metric tons per barge.

(5) A liquid material that has a primary or subsidiary classification of Division 6.1 ''poisonous material'' as listed in 49 CFR 172.101 that is also a ''material poisonous by inhalation'', as defined in 49 CFR 171.8 and that is in a bulk packaging, or that is in a quantity in excess of 20 metric tons per barge when not in a bulk packaging.

(6) Class 7, ''highway route controlled quantity'' radioactive material or ''fissile material, controlled shipment'', as defined in 49 CFR 173.403.

(7) Bulk liquefied chlorine gas and Bulk liquefied gas cargo that is flammable and/or toxic and carried under 46 CFR 154.7.

(8) The following bulk liquids:

(i) Acetone cyanohydrin,

(ii) Allyl alcohol,

(iii) Chlorosulfonic acid,

(iv) Crotonaldehyde,

(v) Ethylene chlorohydrin,

(vi) Ethylene dibromide,

(vii) Methacrylonitrile,

(viii) Oleum (fuming sulfuric acid), and

(ix) Propylene Oxide.

CDC barge means a barge loaded with CDCs.

Downbound means the tow is traveling with the current.

Eighth Coast Guard District means the Coast Guard District as set out in 33 CFR part 3.40–1.

Empty means no product and the barge is certified as gas free by a marine chemist.

Final destination means the final destination of the CDC barge(s); fleeting area, receiving facility or terminal.

Gas free means the barge has been certified by a marine chemist to be gas free.

Loaded means the barge is loaded, or containing CDC cargo residue and not gas free.

Operator means any person, including but not limited to an owner, charterer, or contractor, who conducts or is responsible for the operation of a barge.

Upbound means the tow is traveling against the current.

(d) *Effective dates.* This section is effective from April 16, 2003 through October 31, 2003.

(e) *Regulations.* (1) The operator of a barge(s) loaded with or being loaded with CDCs in the RNA must report to the Inland River Vessel Movement Center (IRVMC):

(i) 4 hours prior to loading a barge(s) with CDCs:

(ii) 4 hours prior to dropping off a CDC barge(s) at a fleeting area;

(iii) 4 hours prior to picking up a CDC barge(s) from a fleeting area;

(iv) 4 hours prior to getting underway with a CDC barge(s) within the RNA;

(v) upon point of entry into the RNA with a CDC barge(s);

(vi) at designated reporting points, set forth in Table 165.T08–019(f), in paragraph (f) of this section;

(vii) when the estimated time of arrival (ETA) to a reporting point varies by 6 hours from the previously reported ETA;

(viii) any significant deviation from previously reported information;

(ix) upon arrival at a ''final'' destination with a CDC barge(s), if arrival is within the RNA;

(x) upon departing the RNA with a CDC barge(s); and

(xi) when directed by the IRVMC.

(2) Each report to the IRVMC must contain all the information items specified in Table 165.T08–019(g), in paragraph (g) of this section.

(3) Reports required by this section must be made to the IRVMC either by telephone toll free to (866) 442–6089, by fax toll free to (866) 442–6107, or by e-mail to *irvmc@cgstl.uscg.mil.*

(4) The general regulations contained in 33 CFR 165.13 apply to this section.

(f) *Eighth Coast Guard District inland river reporting points.* Operators of barges loading or loaded with CDCs must report the information required by this section at the reporting points designated in Table 165.T08–019(f) to this paragraph.

Table 165.T08–019(f). Eighth Coast Guard District Inland River Reporting Points

(1) Lower Mississippi River (LMR) Upbound Reporting Points, Mile Marker (M):
- (i) M 235.0 (Checking into RNA)
- (ii) M 310.0
- (iii) M 385.0
- (iv) M 460.0
- (v) M 535.0
- (vi) M 610.0
- (vii) M 700.0
- (viii) M 775.0
- (ix) M 850.0
- (x) M 925.0

(2) Lower Mississippi River (LMR) Downbound Reporting Points, Mile Marker (M):
- (i) M 850.0
- (ii) M 775.0
- (iii) M 650.0
- (iv) M 525.0
- (v) M 400.0
- (vi) M 270.0
- (vii) M 235.0 (Checking out of RNA)

(3) Upper Mississippi River (UMR) Upbound Reporting Points: at Mile Marker (M) and when Departing Lock & Dam (L&D):
- (i) M 60.0
- (ii) M 145.0
- (iii) L&D 25
- (iv) L&D 21
- (v) L&D 18
- (vi) L&D 14
- (vii) L&D 11
- (viii) L&D 8
- (ix) L&D 4
- (x) L&D 3

(4) Upper Mississippi River (UMR) Downbound Reporting Points, at Mile Marker (M) and when Departing Lock & Dam (L&D), unless otherwise indicated:
- (i) L&D 3
- (ii) L&D 4
- (iii) L&D 8
- (iv) L&D 11
- (v) L&D 14
- (vi) L&D 18
- (vii) L&D 21
- (viii) L&D 25
- (ix) Upon arriving at Melvin Price L&D
- (x) M 145.0
- (xi) M 20.0

(5) Missouri River (MOR) Upbound Reporting Points, at Mile Marker (M):
- (i) M 30.0
- (ii) M 120.0
- (iii) M 225.0
- (iv) M 325.0
- (v) M 425.0
- (vi) M 525.0
- (vii) M 575.0
- (viii) M 675.0
- (ix) M 730.0

(6) Missouri River (MOR) Downbound Reporting Points, at Mile Marker (M):
- (i) M 730.0
- (ii) M 675.0
- (iii) M 550.0
- (iv) M 400.0
- (v) M 225.0
- (vi) M 55.0

(7) Illinois River (ILR) Upbound Reporting Points, at Mile Marker (M) and when Departing Lock & Dam (L&D):
- (i) M 0.0
- (ii) New LaGrange L&D
- (iii) M 140.0
- (iv) M 187.2 (Checking out RNA)

(8) Illinois River (ILR) Downbound Reporting Points, at mile marker and when Departing Lock & Dam (L&D):
- (i) 187.2 (Checking in RNA)
- (ii) New LaGrange L&D

(9) Ohio River Upbound Reporting Points, at Mile Marker (M) and when Departing Lock & Dam (L&D), unless otherwise indicated:
- (i) M 920
- (ii) Upon arriving at John T Meyers L&D
- (iii) M 825.0
- (iv) M 747.0
- (v) M 675.0
- (vi) M 630.0
- (vii) M 557.0
- (viii) M 512.0
- (ix) M 407.0
- (x) Greenup L&D
- (xi) Robert C. Byrd L&D
- (xii) Belleville L&D
- (xiii) Hannibal L&D
- (xiv) Upon arriving at Montgomery L&D

(10) Ohio River Downbound Reporting Points, at Mile Marker (M) and when Departing Lock & Dam (L&D), unless otherwise indicated:
- (i) Montgomery L&D
- (ii) Hannibal L&D
- (iii) Belleville L&D
- (iv) Robert C. Bryd L&D
- (v) Greenup L&D
- (vi) Capt Anthony Meldahl L&D
- (vii) M 550.0
- (viii) M 650.0
- (ix) M 750.0
- (x) John T Meyers L&D
- (xi) Upon arriving at Smithland L&D

(11) Allegheny River Upbound:
- (i) Report when departing RNA

(12) Allegheny River Downbound Reporting Point, when Arriving Lock & Dam (L&D):
- (i) L&D 4

(13) Monongahela River Upbound:
- (i) No reporting point

(14) Monongahela River Downbound Reporting Point, when Arriving Lock & Dam (L&D):
- (i) L&D 4
- (ii) M 24.2

(15) Kanawha River Upbound Reporting Point, when Arriving Lock & Dam (L&D):
- (i) Winfield L&D

(16) Kanawha River Downbound Reporting Point, when Departing Lock & Dam (L&D):

(i) Winfield L&D

(17) Cumberland River Upbound Reporting Points, at Mile Marker (M) and when Departing Lock & Dam (L&D):
(i) Barkley L&D
(ii) M 125.0

(18) Cumberland River Downbound Reporting Points, at Mile Marker (M) and when Departing Lock & Dam (L&D), unless otherwise indicated:
(i) Upon arriving at the Old Hickory L&D
(ii) M 125.0
(iii) Barkley L&D

(19) Tennessee River Upbound Reporting Points, at Mile Marker (M) and when Departing Lock & Dam (L&D), unless otherwise indicated:
(i) Kentucky L&D
(ii) M 125.0
(iii) Pickwick Landing L&D
(iv) General Joe Wheeler L&D
(v) Gunterville L&D
(vi) Nickajack L&D
(vii) Watts Bar L&D
(viii) Upon arriving at Fort Loudon L&D

(20) Tennessee River Downbound Reporting Points, at Mile Marker (M) and when Departing Lock & Dam (L&D), unless otherwise indicated:
(i) Fort Loudon L&D
(ii) Watts Bar L&D
(iii) Upon arriving at Chickamauga L&D
(iv) Nickajack L&D
(v) Gunterville L&D
(vi) General Joe Wheeler L&D
(vii) Pickwick Landing L&D
(viii) M 125.0
(ix) Kentucky L&D

(21) Tennessee-Tombigbee River, Upbound Reporting Points, at Mile Marker (M) and when Departing Lock & Dam (L&D):
(i) Lock D
(ii) Aberdeen L&D
(iii) Aliceville L&D
(iv) M 200.0
(v) M 100.0 Tombigbee River

(22) Tennessee-Tombigbee River, Downbound Reporting Points, at Mile Marker (M) and when Departing Lock & Dam (L&D):
(i) Coffeeville L&D
(ii) M 200.0
(iii) Aliceville L&D
(iv) Aberdeen L&D
(v) Lock D

(23) Mobile River, Upbound Reporting Point at Mile Marker (M):
(i) 0.0 (Checking in RNA)

(24) Mobile River, Downbound Reporting Point at Mile Marker (M):
(i) 0.0 (Checking out RNA)

(25) Black Warrior River, Upbound Reporting Point when Departing L&D:
(i) Holt L&D

(26) Black Warrior River, Downbound Reporting Point when Departing L&D:
(i) Holt L&D

(27) Alabama River, Upbound Reporting Points at Mile Marker (M) and when Departing L&D:
(i) Claiborne L&D
(ii) M 160.0
(iii) M 255.0

(28) Alabama River, Downbound Reporting Points when Departing L&D:
(i) M 255.0
(ii) M 160.0
(iii) Claiborne L&D

(29) McClellan-Kerr Arkansas River Navigation System Upbound Reporting Points, when Departing Lock & Dam (L&D), unless otherwise indicated:
(i) L&D 4
(ii) Upon arriving at David D. Terry L&D
(iii) L&D 9
(iv) Ozark-Jeta Taylor L&D
(v) W.D. Mayo L&D
(vi) Chouteau L&D

(30) McClellan-Kerr Arkansas River Navigation System Downbound Reporting Points, when Departing Lock & Dam (L&D):
(i) Chouteau L&D
(ii) W.D. Mayo L&D
(iii) Ozark-Jeta Taylor L&D
(iv) L&D 9
(v) David D. Terry L&D
(vi) L&D 2

(31) Red River Upbound Reporting Points, Mile Marker and when Departing Lock & Dam (L&D):
(i) L.C. Boggs L&D
(ii) Lock 3
(iii) M 180.0

(32) Red River Downbound Reporting Points, when Departing Lock & Dam (L&D):
(i) Lock 3
(ii) L.C. Boggs L&D

(33) Atchafalaya River, Upbound Reporting Point at Mile Marker (M):
(i) 55.0 (Checking in RNA)

(34) Atchafalaya River, Downbound Reporting Point at Mile Marker (M):
(i) 55.0 (Checking out RNA)

(g) *Required information to be reported to the Inland River Vessel Movement Center (IRVMC).* Operators of barges loading or loaded with CDCs must report the information required by this section, as set out in Table 165.T08–019(g) to this paragraph.

TABLE 165.T08–019(G). REQUIRED INFORMATION TO BE REPORTED TO THE INLAND RIVER VESSEL MOVEMENT CENTER (IRVMC)

	24 hr contact no.	Name and location of the facility or terminal where the barge(s) will be loaded	Name of vessel moving the barge(s)	Barge(s) name	Type, name and amount of CDC to be loaded or onboard	Estimated time of departure from the fleeting area, facility or terminal	Planned route, name and location of "final destination" (fleeting area, receiving facility or terminal), including estimated date of arrival	Reporting point	Estimated time of arrival (ETA) to next reporting point
(1) 4 hours prior to loading a barge(s) with CDC	X	X		X	X				
(2) 4 hours prior to dropping off a CDC barge(s) to a fleeting area				X			X		
(3) 4 hours prior to picking up a CDC barge(s) from a fleeting area	X		X	X	X	X	X		X
(4) 4 hours prior to getting underway within the RNA	X		X	X	X		X	X	X
(5) Upon point of entry into the RNA	X		X	X	X		X	X	X

TABLE 165.T08–019(G). REQUIRED INFORMATION TO BE REPORTED TO THE INLAND RIVER VESSEL MOVEMENT CENTER (IRVMC)—Continued

	24 hr contact no.	Name and location of the facility or terminal where the barge(s) will be loaded	Name of vessel moving the barge(s)	Barge(s) name	Type, name and amount of CDC to be loaded or onboard	Estimated time of departure from the fleeting area, facility or terminal	Planned route, name and location of "final destination" (fleeting area, receiving facility or terminal), including estimated date of arrival	Reporting point	Estimated time of arrival (ETA) to next reporting point
(6) At designated reporting points in Table 165.T08–019(f)	.....	.....	X	X	(1)	.....	(1)	X	X
(7) When ETA to a reporting point varies by 6 hours from previously reported ETA	.....	.....	X	X	(1)	.....	.....	.....	X
(8) Any significant deviation from previously reported information	X	X	X	X	X	X	X	X	X
(9) Upon arrival at destination	.....	.....	X	X	.....	.....	.....	.....	.....
(10) Upon departing the RNA	.....	.....	X	X	.....	.....	.....	X	.....
(11) When directed by the IRVMC	X	X	X	X	X	X	X	X	X

[1] If changed.

(h) Deviation from the requirements of this section is prohibited unless specifically authorized by the Commander, Eighth Coast Guard District or designated representatives. Designated representatives include Captains of the Port within the Eighth Coast Guard District.

Dated: April 16, 2003.

J.W. Stark,

Captain, Coast Guard, Commander, Eighth Coast Guard District, Acting.

[FR Doc. 03–10826 Filed 4–30–03; 9:26 am]

BILLING CODE 4910–15–P

DEPARTMENT OF HOMELAND SECURITY

Coast Guard

33 CFR Part 165

[CGD09–03–209]

RIN 1625–AA11

Regulated Navigation Area; Reporting Requirements for Barges Loaded With Certain Dangerous Cargoes, Illinois Waterway System Within the Ninth Coast Guard District

AGENCY: Coast Guard, DHS.

ACTION: Temporary final rule; request for comments.

SUMMARY: The Coast Guard is establishing a regulated navigation area (RNA) for all portions of the Illinois Waterway System located in the Ninth Coast Guard District. This rule requires that barges loaded with certain dangerous cargoes (CDCs) report their position and other information to the Inland River Vessel Movement Center (IRVMC) and is intended to safeguard vessels, ports and waterfront facilities from sabotage or terrorist acts. This action is necessary to ensure public safety, prevent sabotage or terrorist acts, and facilitate the efforts of emergency services and law enforcement officers responding to terrorist attacks.

DATES: This rule is effective April 16, 2003 through October 31, 2003.

ADDRESSES: You may mail comments and related material to Commander (m), Ninth Coast Guard District, 1240 E. Ninth Street, Cleveland, OH 44199–2060. Commander (m), Ninth Coast Guard District maintains the public docket for this rulemaking. Comments and material received from the public, as well as documents indicated in this preamble as being available in the docket, are part of docket CGD09–03–209 and are available for inspection or copying at Commander (m), Ninth Coast Guard District, 1240 E. Ninth Street, Cleveland, OH 44199–2060 between 8 a.m. and 3:30 p.m., Monday through Friday, except Federal holidays.

FOR FURTHER INFORMATION CONTACT: Commander Michael Gardiner or Lieutenant Matthew Colmer, Ninth Coast Guard District Marine Safety Division, at (216) 902–6045.

SUPPLEMENTARY INFORMATION:

Regulatory Information

We did not publish a notice of proposed rulemaking (NPRM) for this regulation. Under 5 U.S.C. 553(b), the Coast Guard finds that good cause exists for not publishing an NPRM, and under 5 U.S.C. 553(d)(3), good cause exists for making this rule effective less than 30 days after publication in the **Federal Register**. The Maritime Administration (MARAD) recently issued MARAD Advisory 03–03 (182100Z MAR 03) informing operators of maritime interests of increased threat possibilities to vessels and facilities and a higher risk of terrorist attacks to the transportation community in the United States.

Further, national security and intelligence officials warn that future terrorist attacks against the United States interests are likely. The measures contemplated by this rule are intended to prevent waterborne acts of sabotage or terrorism, which terrorists have demonstrated a capability to carry out. Any delay in making this regulation effective would be contrary to the public interest because immediate action is necessary to protect U.S. maritime transportation interests against the possible loss of life, injury, or damage to property.

Request for Comments

We encourage you to participate in this rulemaking by submitting comments and related material. We encourage comments on whether a Regulated Navigation Area is the appropriate tool for a long-term solution to the security risk at issue. If you do so, please include your name and address, identify the docket number for this rulemaking [CGD09–03–209], indicate the specific section of this document to which each comment applies, and give the reason for each comment. Please submit all comments and related material in an unbound format, no larger than 8½ by 11 inches, suitable for copying. If you would like to know they reached us, please enclose a stamped, self-addressed postcard or envelope. We will consider all comments and material received during the comment period. We may change this temporary final rule in view of them.

Public Meeting

We do not now plan to hold a public meeting. But you may submit a request for a meeting by writing to Commander (m), Ninth Coast Guard District at the address under **ADDRESSES** explaining why one would be beneficial. If we determine that one would aid this rulemaking, we will hold one at a time and place announced by a later notice in the **Federal Register**.

Background and Purpose

Terrorist attacks on September 11, 2001, inflicted catastrophic human casualties and property damage. These attacks highlighted terrorists' ability and desire to utilize numerous methods to increase their opportunities to successfully carry out their mission. This includes airborne, waterborne, and land-based threats. This approach maximizes the destructive possibility of their acts.

Since the September 11, 2001 terrorist attacks on the World Trade Center in New York, the Pentagon in Arlington, Virginia and Flight 93, the Federal Bureau of Investigation (FBI) has issued several warnings concerning the potential for additional terrorist attacks within the United States. The threat of maritime attacks is real as evidenced by the October 2002 attack on a tank vessel off the coast of Yemen and the prior attack on the USS COLE. These attacks manifest a continuing threat to U.S. assets as described in the President's finding in Executive Order 13273 of August 21, 2002 (67 FR 56215, September 3, 2002) that the security of the United States is still endangered by terrorist related disturbances in the international relations of the United States that have existed since the terrorist attacks on the United States of September 11, 2001. *See also Continuation of the National Emergency with Respect to Certain Terrorist Attacks,* (67 FR 58317, September 13, 2002); *Continuation of the National Emergency With Respect To Persons Who Commit, Threaten To Commit, Or Support Terrorism,* (67 FR 59447, September 20, 2002).

The U.S. Maritime Administration (MARAD) issued Advisory 02–07, which recommends that U.S. shipping interests maintain a heightened state of alert against possible terrorist attacks. MARAD more recently issued Advisory 03–03 informing operators of maritime interests of increased threat possibilities to vessels and facilities and a higher risk of terrorist attacks to the transportation community in the United States. The ongoing hostilities in Afghanistan and the war with Iraq underscore the prudence of U.S. ports and waterways being on a higher state of alert. The heightened state of alert is further supported by declarations and the ongoing intent of the Al Qaeda organization and other similar organizations to conduct armed attacks on U.S. interests worldwide.

This RNA complements a parallel rule issued by the Eighth Coast Guard District on April 16, 2003. The purpose of these complementary rules is to create a consistent and seamless reporting system for the Western Rivers Inland Waterway System within the Eighth and Ninth Coast Guard Districts.

This RNA applies to barges loaded with CDCs operating on the Illinois Waterway System above mile 187.2 to the Chicago Lock on the Chicago River at mile 326.7 and to the confluence of the Calumet River and Lake Michigan at mile 333.5 of the Calumet River. The vessels affected by this RNA transport CDCs that, if used as a weapon of terrorism, could result in substantial loss of life, property and environmental damage, as well as grave economic consequences. This RNA requires operators, as defined in this rule, of barges loading or loaded with CDCs to periodically report their position and other specified information to the Inland River Vessel Movement Center (IRVMC).

If additional information warrants modifying or amending this rule, we will revise the rule and publish the revision in the **Federal Register**. We will also issue Broadcast Notices to Mariners regarding any such revision. This RNA is issued under authority contained in 33 U.S.C. 1226 and 50 U.S.C. 191.

Discussion of Rule

This rule applies to operators of a barge loaded with or loading CDCs, within the regulated area. This rule does not apply to operators of ''empty'' barges within the RNA. The terms barge, certain dangerous cargoes (CDCs), downbound, CDC barge, Ninth Coast Guard District, empty, final destination, gas free, loaded, operator, and upbound are defined in the regulatory section of this rule. The operator of a barge(s) loaded with or being loaded with CDCs must report to the IRVMC specific information under the following conditions: 4 hours prior to loading a barge(s) with CDCs; 4 hours prior to dropping off a CDC barge(s) in a fleeting area; 4 hours prior to picking up a CDC barge(s) from a fleeting area; 4 hours prior to getting underway with a CDC barge(s); upon point of entry into the RNA with a CDC barge(s); at designated reporting points in Table 165.T09–209(f); when the estimated time of arrival (ETA) to a reporting point varies by 6 hours from the previously reported ETA; any significant deviation from previously reported information; upon arrival at the ''final'' destination with a CDC barge(s); upon departing the RNA with a CDC barge(s); and when directed by the IRVMC.

Each report to the IRVMC must contain all the information items specified in Table 165.T09–209(g). Reports must be made to the IRVMC, either by telephone toll free to (866) 442–6089, by fax to (866) 442–6107, or by e-mail to *irvmc@cgstl.uscg.mil.*

Deviation from this rule is prohibited unless specifically authorized by the Commander, Ninth Coast Guard District or his designated representative.

Regulatory Evaluation

This rule is not a ''significant regulatory action'' under section 3(f) of Executive Order 12866, Regulatory Planning and Review, and does not require an assessment of potential costs and benefits under section 6(a)(3) of that Order. The Office of Management and Budget has not reviewed it under that Order. It is not ''significant'' under the regulatory policies and procedures of the Department of Homeland Security. The operational reporting requirements of the RNA are minimal, transitory and necessary to provide immediate, improved security for the public, vessels, and U.S. ports and waterways. The requirements do not alter normal barge cargo loading operations or transits. Additionally, this rule is temporary in nature and the Coast Guard may issue a NPRM as it considers whether to make this rule permanent. Any hardships experienced by persons or vessels are necessary to the national interest in protecting the public, vessels, and vessel crews from the devastating consequences of acts of terrorism, and from sabotage or other subversive acts, accidents, or other causes of a similar nature.

Small Entities

Under the Regulatory Flexibility Act (5 U.S.C. 601–612), we have considered whether this rule would have a significant economic impact on a substantial number of small entities. The term ''small entities'' comprises small businesses, not-for-profit organizations that are independently owned and operated and are not dominant in their fields, and governmental jurisdictions with populations of less than 50,000.

The Coast Guard certifies under 5 U.S.C. 605(b) that this rule will not have a significant economic impact on a

substantial number of small entities. This rule will affect the following entities, some of which may be small entities: The operators of barges intending to load CDCs and transit on inland waterways with CDC barge(s) within that portion of the Illinois Waterway System located within the Ninth Coast Guard District. This RNA will not have a significant economic impact on a substantial number of small entities because this rule does not require any alteration of barge operations or transits. The operational communications required by this RNA are transitory in nature and do not require operators to obtain new equipment.

If you think that your business, organization, or governmental jurisdiction qualifies as a small entity and that this rule would have a significant economic impact on it, please submit a comment (*see* **ADDRESSES**) explaining why you think it qualifies and how and to what degree this rule would economically affect it.

Assistance for Small Entities

Under subsection 213(a) of the Small Business Regulatory Enforcement Fairness Act of 1996 (Pub. L. 104–121), we offered to assist small entities in understanding the rule so that they can better evaluate its effects on them and participate in the rulemaking process. Small businesses may send comments on the actions of Federal employees who enforce, or otherwise determine compliance with, Federal regulations to the Small Business and Agriculture Regulatory Enforcement Ombudsman and the Regional Small Business Regulatory Fairness Boards. The Ombudsman evaluates these actions annually and rates each agency's responsiveness to small business. If you wish to comment on actions by employees of the Coast Guard, call 1–888–REG–FAIR (1–888–734–3247).

Collection of Information

This rule calls for new collection of information under the Paperwork Reduction Act of 1995 (44 U.S.C. 3501–3520). As defined in 5 CFR 1320.3(c), ''collection of information'' comprises reporting, recordkeeping, monitoring, posting, labeling, and other, similar actions. The title and description of the information collection, a description of those who must collect the information, and an estimate of the total annual burden follow. The estimate covers the time for reviewing instructions, searching existing sources of data, gathering and maintaining the data needed, and completing and reviewing the collection.

Title: Regulated Navigation Areas; Reporting Requirements for Barges Loaded with Certain Dangerous Cargoes, Inland Rivers, Eighth and Ninth Coast Guard Districts.

OMB Control Number: 1625–0105.

Summary of the Collection of Information: The Coast Guard requires position and intended movement reporting, and cargo transfer and fleeting operations reporting, from barges carrying CDCs in the inland rivers within the Eighth and Ninth Coast Guard Districts. This rule will amend 33 CFR part 165 to temporarily require:

Owners and operators of covered barges must report the following information via toll free telephone, toll free fax, or email:

a. Name of barge and towboat;

b. Name of loading, fleeting, and terminal facility;

c. Estimated time of arrival (ETA) at loading, fleeting and terminal facility;

d. Planned route, including estimated time of departure (ETD) from loading, fleeting, and terminal facility;

e. 4 hours prior to loading covered dangerous cargoes;

f. 4 hours prior to dropping off a covered barge in a fleeting area;

g. 4 hours prior to picking up a covered barge from a fleeting area;

h. 4 hours prior to getting underway with a covered barge;

i. At entry into the covered geographical area;

j. ETA at approximately 148 designated reporting points within the covered geographical area;

k. At any time ETA to a reporting point varies by 6 hours from the previously reported ETA;

l. Any significant deviation from previously reported information;

m. Upon arrival at the ''final'' destination with a covered barge, if within the covered geographical area;

n. Upon departing the covered geographical area; and

o. When directed by the Coast Guard.

The temporary changes will be in effect through October 31, 2003.

Need for Information: To ensure port safety and security and to ensure the uninterrupted flow of commerce, the Coast Guard must temporarily issue regulations requiring position and intended movement reporting, and cargo transfer and fleeting operations reporting, from barges carrying CDCs in the inland rivers within the Eighth and Ninth Coast Guard Districts.

Proposed use of Information: This information is required to enhance maritime security, control vessel traffic, develop contingency plans, and enforce regulations.

Description of the Respondents: The respondents are owners, agents, masters, operators, or persons in charge of barges loaded with certain dangerous cargoes operating on the inland rivers located within the Eighth and Ninth Coast Guard Districts.

Number of Respondents: The existing OMB-approved collection number of respondents is zero (0). This temporary rule will increase the number of respondents by 3,505 to a total of 3,505.

Frequency of Response: The existing OMB-approved collection annual number of responses is zero (0). This temporary rule will increase the number of responses by 7,711 to a total of 7,711.

Burden of Response: The existing OMB-approved collection burden of response is zero (0). This temporary rule will increase the burden of response by 15 minutes (0.250 hours) to a total of 15 minutes (0.250 hours).

Estimate of Total Annual Burden: The existing OMB-approved collection total annual burden is zero (0). This temporary rule will increase the total annual burden by 1,928 hours to a total of 1,928 hours.

As required by the Paperwork Reduction Act of 1995 (44 U.S.C. 3507(d)), we submitted a copy of this rule to the Office of Management and Budget (OMB) for its review of the collection of information. Due to the circumstances surrounding this temporary rule, we asked for ''emergency processing'' of our request. We received OMB approval for the collection of information on April 16, 2003. It is valid through October 31, 2003.

We ask for public comment on the collection of information to help us determine how useful the information is; whether it can help us perform our functions better; whether it is readily available elsewhere; how accurate our estimate of the burden of collection is; how valid our methods for determining burden are; how we can improve the quality, usefulness, and clarity of the information; and how we can minimize the burden of collection.

If you submit comments on the collection of information, submit them both to OMB and to the Docket Management Facility where indicated under **ADDRESSES,** by the date under **DATES.**

You need not respond to a collection of information unless it displays a currently valid control number from OMB. We received OMB approval for the collection of information on April 16, 2003. It is valid through October 31, 2003.

Federalism

A rule has implications for federalism under Executive Order 13132,

Federalism, if it has a substantial direct effect on State or local governments and would either preempt State law or impose a substantial direct cost of compliance on them. We have analyzed this rule under that Order and have determined that it does not have implications for federalism.

Unfunded Mandates Reform Act

The Unfunded Mandates Reform Act of 1995 (2 U.S.C. 1531–1538) requires Federal agencies to assess the effects of their discretionary regulatory actions. In particular, the Act addresses actions that may result in the expenditure by a State, local, or tribal government, in the aggregate, or by the private sector of $100,000,000 or more in any one year. Though this rule will not result in such an expenditure, we do discuss the effects of this rule elsewhere in this preamble.

Taking of Private Property

This rule will not effect a taking of private property or otherwise have taking implications under Executive Order 12630, Governmental Actions and Interference with Constitutionally Protected Property Rights.

Civil Justice Reform

This rule meets applicable standards in sections 3(a) and 3(b)(2) of Executive Order 12988, Civil Justice Reform, to minimize litigation, eliminate ambiguity, and reduce burden.

Protection of Children

We have analyzed this rule under Executive Order 13045, Protection of Children from Environmental Health Risks and Safety Risks. This rule is not an economically significant rule and does not create an environmental risk to health or risk to safety that may disproportionately affect children.

Indian Tribal Governments

This rule does not have tribal implications under Executive Order 13175, Consultation and Coordination with Indian Tribal Governments, because it does not have a substantial direct effect on one or more Indian tribes, on the relationship between the Federal Government and Indian tribes, or on the distribution of power and responsibilities between the Federal Government and Indian tribes.

Energy Effects

We have analyzed this rule under Executive Order 13211, Actions Concerning Regulations That Significantly Affect Energy Supply, Distribution, or Use. We have determined that it is not a ''significant energy action'' under that order because it is not a ''significant regulatory action'' under Executive Order 12866 and is not likely to have a significant adverse effect on the supply, distribution, or use of energy. The Administrator of the Office of Information and Regulatory Affairs has not designated it as a significant energy action. Therefore, it does not require a Statement of Energy Effects under Executive Order 13211.

Environment

We have analyzed this rule under Commandant Instruction M16475.1D, which guides the Coast Guard in complying with the National Environmental Policy Act of 1969 (NEPA) (42 U.S.C. 4321–4370f), and have concluded that there are no factors in this case that would limit the use of categorical exclusion under section 2.B.2 of the Instruction. Therefore, this rule is categorically excluded, under figure 2–1 paragraph (34)(g), of the instruction, from further environmental documentation because this rule is not expected to result in any significant environmental impact as described in NEPA. A final ''Environmental Analysis Check List'' and a final ''Categorical Exclusion Determination'' are available in the docket where indicated under **ADDRESSES.**

List of Subjects in 33 CFR Part 165

Harbors, Marine safety, Navigation (water), Reporting and recordkeeping requirements, Security measures, Vessels, Waterways.

■ For the reasons discussed in the preamble, the Coast Guard amends 33 CFR part 165 as follows:

PART 165—REGULATED NAVIGATION AREAS AND LIMITED ACCESS AREAS

■ 1. The authority citation for part 165 continues to read as follows:

Authority: 33 U.S.C. 1231; 50 U.S.C. 191, 33 CFR 1.05–1(g), 6.04–1, 6.04–6, and 160.5; Department of Homeland Security Delegation No. 0170.

■ 2. Add temporary § 165.T09–209 to read as follows:

§ 165.T09–209 Regulated Navigation Area; Reporting Requirements for Barges Loaded with Certain Dangerous Cargoes, Illinois Waterway System Within the Ninth Coast Guard District.

(a) *Regulated Navigation Area.* The following waters are a Regulated Navigation Area (RNA): the Illinois Waterway System above mile 187.2 to the Chicago Lock on the Chicago River at mile 326.7 and to the confluence of the Calumet River and Lake Michigan at mile 333.5 of the Calumet River.

(b) *Applicability.* This section applies to operators of barges loading or loaded with certain dangerous cargoes (CDCs) within the Regulated Navigation Area. This section does not apply to operators of ''empty'' CDC barges, as defined in the definitions section.

(c) *Definitions.* As used in this section:

Barge means a non-self-propelled vessel engaged in commerce. As set out in 33 CFR 160.204, published February 28, 2003 in *Notification of Arrival in U.S. Ports,* (68 FR 9537, 9544).

Certain Dangerous Cargoes (CDCs) includes any of the following:

(1) Division 1.1 or 1.2 explosives as defined in 49 CFR 173.50, and that is in a quantity in excess of 100 metric tons per barge.

(2) Division 1.5D blasting agents for which a permit is required under 49 CFR 176.415 or, for which a permit is required as a condition of a Research and Special Programs Administration (RSPA) exemption, and that is in a quantity in excess of 100 metric tons per barge.

(3) Division 2.3 ''poisonous gas'', as listed in 49 CFR 172.101 that is also a ''material poisonous by inhalation'' as defined in 49 CFR 171.8, and that is in a quantity in excess of 1 metric ton per barge.

(4) Division 5.1 ''Ammonium Nitrate and Certain Ammonium Nitrate Fertilizers'' for which a permit is required under 49 CFR 176.415, or for which a permit is required as a condition of a RSPA exemption, and that is in a quantity in excess of 100 metric tons per barge.

(5) A liquid material that has a primary or subsidiary classification of Division 6.1 ''poisonous material'' as listed in 49 CFR 172.101 that is also a ''material poisonous by inhalation'', as defined in 49 CFR 171.8 and that is in a bulk packaging, or that is in a quantity in excess of 20 metric tons per barge when not in a bulk packaging.

(6) Class 7, ''highway route controlled quantity'' radioactive material or ''fissile material, controlled shipment'', as defined in 49 CFR 173.403.

(7) Bulk liquefied chlorine gas and Bulk liquefied gas cargo that is flammable and/or toxic and carried under 46 CFR 154.7.

(8) The following bulk liquids:

(i) Acetone cyanohydrin,

(ii) Allyl alcohol,

(iii) Chlorosulfonic acid,

(iv) Crotonaldehyde,

(v) Ethylene chlorohydrin,

(vi) Ethylene dibromide,

(vii) Methacrylonitrile,

(viii) Oleum (fuming sulfuric acid), and

(ix) Propylene Oxide.

CDC barge means a barge loaded with CDCs.

Downbound means the tow is traveling with the current.

Empty means no product and the barge is certified gas free by a marine chemist.

Final destination means the final destination of the CDC barge(s); fleeting area, receiving facility or terminal.

Gas free means the barge has been certified by a marine chemist to be gas free.

Loaded means the barge is loaded, or containing CDC cargo residue and not gas free.

Ninth Coast Guard District means the Coast Guard District as set out in 33 CFR part 3.45–1.

Operator means any person, including but not limited to an owner, charterer, or contractor, who conducts or is responsible for the operation of a barge.

Upbound means the tow is traveling against the current.

(d) *Effective dates.* This section is effective from April 16, 2003 through October 31, 2003.

(e) *Regulations.* (1) The operator of a barge(s) loaded with or being loaded with CDCs in the RNA must report to the Inland River Vessel Movement Center (IRVMC):

(i) 4 hours prior to loading a barge(s) with CDCs:

(ii) 4 hours prior to dropping off a CDC barge(s) at a fleeting area;

(iii) 4 hours prior to picking up a CDC barge(s) from a fleeting area;

(iv) 4 hours prior to getting underway with a CDC barge(s) within the RNA;

(v) Upon point of entry into the RNA with a CDC barge(s);

(vi) At designated reporting points, set forth in Table 165.T09–209(f), in paragraph (f) of this section;

(vii) When the estimated time of arrival (ETA) to a reporting point varies by 6 hours from the previously reported ETA;

(viii) Any significant deviation from previously reported information;

(ix) Upon arrival at a ''final'' destination with a CDC barge(s);

(x) Upon departing the RNA with a CDC barge(s); and

(xi) When directed by the IRVMC.

(2) Each report to the IRVMC must contain all the information items specified in Table 165.T09–209(g), in paragraph (g) of this section.

(3) Reports required by this section must be made to the IRVMC either by telephone toll free to (866) 442–6089, by fax toll free to (866) 442–6107, or by e-mail to *irvmc@cgstl.uscg.mil.*

(4) The general regulations contained in 33 CFR 165.13 apply to this section.

(f) *Ninth Coast Guard District inland river reporting points.* Operators of barges loading or loaded with CDCs must report the information required by this section at the reporting points designated in Table 165.T09–209(f) to this paragraph.

Table 165.T09–209(f). *Ninth Coast Guard District Inland River Reporting Points*

(1) Illinois River (ILR) Upbound Reporting Points, at Mile Marker (M) and when Departing Lock & Dam (L&D):

(i) M 187.2 Southern Boundary MSO Chicago AOR

(ii) M 271.5 Dresden L&D

(iii) M 291.0 Lockport L&D

(iv) M 303.5 Junction of Chicago Sanitary Ship Canal and Calumet Sag Channel

(v) M 326.4 Thomas S. O'Brien Lock Calumet River

(vi) M 333.5 Confluence of Calumet River and Lake Michigan

(vii) M 326.7 Chicago Lock Chicago River

(2) Illinois River (ILR) Downbound Reporting Points, at mile marker and when Departing Lock & Dam (L&D):

(i) M 326.7 Chicago Lock Chicago River

(ii) M 333.5 Confluence of Calumet River and Lake Michigan

(iii) M 326.4 Thomas S. O'Brien Lock Calumet River

(iv) M 303.5 Junction of Chicago Sanitary Ship Canal and Calumet Sag Channel

(iv) M 291.0 Lockport L&D

(v) M 271.5 Dresden L&D

(vi) M 187.2 Southern Boundary MSO Chicago AOR

(g) *Required information to be reported to the Inland River Vessel Movement Center (IRVMC).* Operators of barges loading or loaded with CDCs must report the information required by this section, as set out in Table 165.T09–209(g) to this paragraph.

TABLE 165.T09–209(G).—REQUIRED INFORMATION TO BE REPORTED TO THE INLAND RIVER VESSEL MOVEMENT CENTER (IRVMC)

	24 hr contact number	Name and location of the facility or terminal where the barge(s) will be loaded.	Name of vessel moving the barge(s)	Barge(s) name	Type, name and amount of CDC to be loaded or onboard	Estimated time of departure from the fleeting area, facility or terminal.	Planned route, name and location of ''final destination'' (fleeting area, receiving facility or terminal), including estimated date of arrival	Reporting point	Estimated time of arrival (ETA) to next reporting point
(1) 4 hours prior to loading a barge(s) with CDC	X	X	.....	X	X	.....	.....	.....	.....
(2) 4 hours prior to dropping off a CDC barge(s) to a fleeting area	.....	.....	.....	X	.....	.....	X	.....	.....
(3) 4 hours prior to picking up a CDC barge(s) from a fleeting area	X	.....	X	X	X	X	X	.....	X
(4) 4 hours prior to getting underway within the RNA	X	.....	X	X	X	.....	X	X	X
(5) Upon point of entry into the RNA	X	.....	X	X	X	.....	X	X	X
(6) At designated reporting points in TABLE 165.T09–209 (f)	.....	.....	X	X	If changed	.....	If changed	X	X

TABLE 165.T09–209(G).—REQUIRED INFORMATION TO BE REPORTED TO THE INLAND RIVER VESSEL MOVEMENT CENTER (IRVMC)—Continued

	24 hr contact number	Name and location of the facility or terminal where the barge(s) will be loaded.	Name of vessel moving the barge(s)	Barge(s) name	Type, name and amount of CDC to be loaded or onboard	Estimated time of departure from the fleeting area, facility or terminal.	Planned route, name and location of ''final destination'' (fleeting area, receiving facility or terminal), including estimated date of arrival	Reporting point	Estimated time of arrival (ETA) to next reporting point
(7) When ETA to a reporting point varies by 6 hours from previously reported ETA	.....	.....	X	X	If changed	.....	.....	.....	X
(8) Any significant deviation from previously reported information	X	X	X	X	X	X	X	X	X
(9) Upon arrival at destination	.....	.....	X	X	.....	.....	.....	.....	.....
(10) Upon departing the RNA	.....	.....	X	X	.....	.....	.....	X	.....
(11) When directed by the IRVMC	X	X	X	X	X	X	X	X	X

(h) Deviation from the requirements of this section is prohibited unless specifically authorized by the Commander, Ninth Coast Guard District or designated representatives. Designated representatives include Captains of the Port within the Ninth Coast Guard District.

(i) In addition to 33 U.S.C. 1231 and 50 U.S.C. 191, the authority for this section includes 33 U.S.C. 1226.

Dated: April 16, 2003.

Ronald F. Silva,

Rear Admiral, Coast Guard, Commander, Ninth Coast Guard District.

[FR Doc. 03–10827 Filed 4–30–03; 9:26 am]

BILLING CODE 4910–15–P

ENVIRONMENTAL PROTECTION AGENCY

40 CFR Part 52

[PA183–4203a; FRL–7480–2]

Approval and Promulgation of Air Quality Implementation Plans; Pennsylvania; VOC and NO_X RACT Determinations for Three Individual Sources

AGENCY: Environmental Protection Agency (EPA).

ACTION: Direct final rule.

SUMMARY: EPA is taking direct final action to approve revisions to the Commonwealth of Pennsylvania's State Implementation Plan (SIP). The SIP revisions were submitted by the Pennsylvania Department of Environmental Protection (PADEP) to establish and require reasonably available control technology (RACT) for three major sources of volatile organic compounds (VOC) and nitrogen oxides (NO_X) located in Pennsylvania. EPA is approving these revisions to establish RACT requirements in the SIP in accordance with the Clean Air Act (CAA).

DATES: This rule is effective on July 1, 2003, without further notice, unless EPA receives adverse written comment by June 2, 2003. If EPA receives such comments, it will publish a timely withdrawal of the direct final rule in the **Federal Register** and inform the public that the rule will not take effect.

ADDRESSES: Written comments should be mailed to Makeba Morris, Acting Branch Chief, Air Quality Planning & Information Services Branch, Air Protection Division, Mailcode 3AP21, U.S. Environmental Protection Agency, Region III, 1650 Arch Street, Philadelphia, Pennsylvania 19103. Copies of the documents relevant to this action are available for public inspection during normal business hours at the Air Protection Division, U.S. Environmental Protection Agency, Region III, 1650 Arch Street, Philadelphia, Pennsylvania 19103; the Air and Radiation Docket and Information Center, U.S. Environmental Protection Agency, 1301 Constitution Avenue, NW., Room B108, Washington, DC 20460; and the Pennsylvania Department of Environmental Protection, Bureau of Air Quality Control, P.O. Box 8468, 400 Market Street, Harrisburg, Pennsylvania 17105.

FOR FURTHER INFORMATION CONTACT: Betty Harris at (215) 814–2168 or Rose Quinto at (215) 814–2182 or via e-mail at *harris.betty@epa.gov* or *quinto.rose@epa.gov.*

SUPPLEMENTARY INFORMATION:

I. Background

Pursuant to sections 182(b)(2) and 182(f) of the CAA, the Commonwealth of Pennsylvania (the Commonwealth or Pennsylvania) is required to establish and implement RACT for all major VOC and NO_X sources. The major source size is determined by its location, the classification of that area, and whether it is located in the ozone transport region (OTR). Under section 184 of the CAA, RACT, as specified in sections 182(b)(2) and 182(f) applies throughout the OTR. The entire Commonwealth is located within the OTR. Therefore, RACT is applicable statewide in Pennsylvania.

II. Summary of the SIP Revision

On December 21, 2001, PADEP submitted formal revisions to its SIP to establish and impose case-by-case RACT for several major sources of VOC and NO_X. This rulemaking pertains to three of those sources. The other sources are subject to separate rulemaking actions. The RACT determinations and requirements are included in plan approvals (PA) or operating permits (OP) issued by PADEP.

The following identifies the individual plan approval or operating permit that EPA is approving for each source.

A. Bethlehem Structural Products Corporation

Bethlehem Structural Products Corporation (BSPC) is a coke and coal chemical production facility located in Northampton County, Pennsylvania and is considered a major VOC and NO_X emitting facility. In this instance, RACT has been established and imposed by PADEP in an operating permit. On December 21, 2001, PADEP submitted operating permit No. OP–48–0013 to EPA as a SIP revision. This permit requires BSPC sources and any associated air cleaning devices to be operated and maintained in a manner consistent with good operating and maintenance practices. This permit contains the following NO_X emission limits: (a) Battery ''A'' combustion stack—0.71 lb./MMBTU heat input for a 30-day rolling average; (b) Battery ''2A'' combustion stack—0.24 lb./MMBTU heat input for a 30-day rolling average; (c) Desulfurizer—4.25 tons per year; (d) Coke bleeders (operations)—0.85 tons per day; and (e) Coke Plant Boilerhouse—Boiler Nos. 1, 2, 3 and 4—0.25 lb./MMBTU heat input (daily average). This permit also contains VOC emission limits for the coke side from Battery ''A'' that shall not exceed 438 tons per year.

This permit contains testing requirements for the following: (a) Source tests for NO_X for the boiler house, Battery ''A'' combustion stack and for Battery ''2A'' (each of under fire stacks 2 and 3) shall be conducted in accordance with 25 Pa. Code Chapter 139 as per PADEP's source testing procedures described in the latest Source Testing Manual or source testing procedure approved by PADEP prior to testing. Compliance shall be based on average of these consecutive source tests and the source tests are to be conducted on an annual basis; (b) At least 60 days prior to the tests, pre-test protocol shall be submitted to PADEP for approval; and (c) Within 60 days of completion of the tests, two copies of the complete test reports, including all operating conditions shall be submitted to PADEP for approval.

The permit also contains requirements for the coke and chemical production sources:

(1) Battery ''A'' and ''2A'' Under fire—The NO_X RACT shall be the operation and maintenance of low excess air technology, by minimizing fuel use and maintaining the best air-to-fuel ratio that satisfies the process. The company shall maintain records in accordance with the record keeping requirements of 25 Pa. Code section 129.95 and shall include as a minimum, data which clearly demonstrate that the NO_X emission limits are met. All records shall be maintained for at least two years and made available to PADEP upon request.

(2) Desulfurizer—NO_X and VOC RACT for the desulfurizer operation, specifically the tail-gas incinerator of the desulfurizer, shall be the operation and maintenance of the source according to the manufacturers specifications. The facility shall not be less than 22,000,000 SCFD of the minimum daily amount of coke oven gas entering the oven gas desulfurizer unit and shall not exceed 70,000,000 SCFD of the maximum daily amount of coke oven gas entering the coke oven gas desulfurizer unit. The facility shall record the daily amount of coke oven gas produced by the coke oven batteries and those records be maintained for a period of two years and made available to PADEP upon request. Within 14 days of the completion of the annual desulfurizer plant outage for the boiler inspection and plant maintenance, the facility shall submit a written notification to PADEP giving the details of the maintenance work performed on the plant, and the dates of the outage. The facility shall maintain records in accordance with the recordkeeping requirements of 25 Pa. Code section 129.95 and shall include as a minimum, data which clearly demonstrate that the NO_X emission limits are met. All records shall be maintained for a period of at least two years and made available to PADEP upon request.

(3) Coke Bleeders—The NO_X RACT for the Coke Bleeders shall be the operation and maintenance of the sources according to the current operating practice. The facility shall maintain records in accordance with the recordkeeping requirements of 25 Pa. Code section 129.95 and shall include as a minimum, data which clearly demonstrate that the NO_X emission limits are met. All records shall be maintained for a period of at least two years and made available to PADEP upon request.

(4) Coke Plant Boiler house—Boiler Nos. 1, 2 and 3 can be fired by a combination of tar derivatives, used oil, and No. 6 fuel oil; a combination of tar and grease derived fuel oil; and a combination of desulfurized coke oven gas and natural gas. Boiler No. 4 can be fired by a combination of No. 6 fuel oil, tar derivatives and used oil or a combination of desulfurized coke oven gas and natural gas. NO_X RACT shall be the operation and maintenance of the boilers according to manufacturers specifications. In addition, an annual tune-up of each boiler's combustion process shall be performed. The facility shall maintain records in accordance with the recordkeeping requirements of 25 Pa. Code section 129.95 and shall include as a minimum, data which clearly demonstrate that the NO_X emission limits are met. All records shall be maintained for a period of at least two years and made available to PADEP upon request.

(5) Coal Chemical Process—VOC RACT of the coal chemical process shall be the operation and maintenance of the sources according to the manufacturer's specifications. Sources shall also be operated and maintained in accordance with good air pollution control practices. The coal chemical process consists of sources and associated gas blanketing systems identified in the permit. The facility shall maintain records in accordance with the recordkeeping requirements of 25 Pa. Code section 129.95. All records shall be maintained for at least two years and made available to PADEP upon request.

(6) Coke Oven Batteries ''A'' and ''2A''—VOC RACT for the Coke Oven Batteries ''A'' and ''2A'', push and coke sides, shall be the operation and maintenance of the sources according to the manufacturer's specifications. Sources shall also be operated and maintained in accordance with good air pollution control practices. The facility shall maintain records in accordance with the recordkeeping requirements of 25 Pa. Code section 129.95 and shall include as a minimum, data which clearly demonstrate that the VOC emission limit is met. All records shall be maintained for a period of at least two years and made available to PADEP upon request.

(7) VOC RACT for in-plant painting and the compressed air system shall be the operation and maintenance of the sources according to manufacturers' specifications.

B. International Paper Company, Erie Mill

International Paper Company, Erie Mill, operates an integrated pulp and paper manufacturing facility located in Lancaster County, Pennsylvania and is considered a major VOC and NO_X emitting facility. Boilers 18, 19, 21, and 23 provide power for the facility. In this instance, RACT has been established and imposed by PADEP in a plan approval. On December 21, 2001, PADEP submitted plan approval No. PA–25–028 to EPA as a SIP revision. The plan approval is for the installation of Low NO_X Burners on Boilers 18 and 19. Stack testing shall be done in accordance with 25 Pa. Code Chapter 139 for determining the amount of NO_X emissions. The facility shall conduct

annual stack testing on Boilers 18 and 19 within 10 weeks after the installation of Low NO_X Burners. Stack testing shall be performed on Boiler 23 on or before the stack testing date set for Boilers 18 and 19. A pre-test procedure shall be submitted at least 30 days prior to actual testing. PADEP shall be notified at least two weeks in advance of the date and time of stack testing. Two copies of the complete test reports shall be submitted within 60 days after the source test.

The plan approval requires the facility to comply with 25 Pa. Code section 129.95 for recordkeeping requirements.

The plan approval contains emission limits of NO_X for Boiler No. 21 and the Recovery Boiler based on a 30-day rolling average of 0.54 lbs./MMBTU and 0.20 lbs./MMBTU, respectively. Both Boiler No. 21 and the Recovery Boiler are equipped with a NO_X continuous emission monitoring (CEM) system, which will be used to show compliance with the NO_X RACT limit.

VOC emissions from the pulp production area, paper mill, and recausticizing areas shall be maintained at the lowest possible level. International Paper shall maintain a program of continual evaluation of available chemical formulations for replacement where possible with chemical formulations containing a lower level of VOC. International Paper shall maintain records of usage of VOC containing materials in accordance with 25 Pa. Code section 129.95, and shall inform PADEP upon changes in currently used VOC containing chemical formulations.

C. Natural Fuel Gas Supply Corporation

The National Fuel Gas Supply Corporation, Heath Compressor Station, is located in Jefferson County, Pennsylvania and is considered a major NO_X emitting facility. This facility consists of seven natural gas compressors and a standby generator. All seven compressors are reciprocating internal combustion engines fueled by pipeline quality natural gas. The standby generator is driven by a 35 HP internal combustion engine fueled by natural gas. In this instance, RACT has been established and imposed by PADEP in an operating permit for one of the compressors, the Waukesha Unit #9. On December 21, 2001, PADEP submitted operating permit No. PA–33–144A to EPA as a SIP revision. The RACT plan approval is for the installation of an air fuel ratio controller and catalytic converter on the Waukesha Unit #9. Emission limits for the Waukesha Unit #9 will be reduced 80 percent to a low NO_X emission rate of 7.7 lb./hr. The NO_X RACT emission limits will be waived for one hour period following the sources start up or shutdown. Stack testing to determine the emission rates shall be performed within 60 days of startup of the unit and every five years thereafter. The facility shall perform semi-annual stack tests using a portable analyzer on the Waukesha Unit. The protocol shall be approved by PADEP and may require annual tests in accordance with EPA reference methods pending the submission of the semi-annual stack tests. At least 30 days prior to the scheduled stack test, a test procedure and a sketch with dimensions indicating the location of sampling ports and other data to ensure the collection of representative samples shall be submitted to PADEP for approval. Also, at least two weeks prior to the test, PADEP shall be informed of the date and time of the test. Two copies of the stack test results shall be submitted to PADEP for review within 60 days of completion of the testing. The facility shall submit to PADEP all recordkeeping reports for all sources subject to RACT requirements within 30 days of the end of each calendar year. The facility shall also comply with 25 Pa. Code section 129.95 for recordkeeping requirements. For the standby generator, this source shall be installed, maintained, and operated in accordance with the manufacturer's specification, be operating less than 500 hours in a consecutive 12 month period, and also be operated and maintained in accordance with good air pollution control practices. For Snow units 1, 2, 3, 4, 6, and 8; and the other sources listed in Table 2 of the RACT plan approval, these sources shall be installed, maintained and operated in accordance with the manufacturer's specifications, and also be operated and maintained in accordance with good air pollution control practices.

III. EPA's Evaluation of the SIP Revisions

EPA is approving these SIP submittals because the Commonwealth established and imposed requirements in accordance with the criteria set forth in SIP-approved regulations for imposing RACT or for limiting a source's potential to emit. The Commonwealth has also imposed record-keeping, monitoring, and testing requirements on these sources sufficient to determine compliance with these requirements.

IV. Final Action

EPA is approving revisions to the Commonwealth of Pennsylvania's SIP which establish and require RACT for these three major sources of VOC and NO_X: (1) Bethlehem Structural Products Corporation in Northampton County; (2) International Paper Company in Erie County; and (3) National Fuel Gas Supply in Jefferson County. EPA is publishing this rule without prior proposal because we view this as a noncontroversial amendment and anticipate no adverse comment. However, in the ''Proposed Rules'' section of today's **Federal Register**, EPA is publishing a separate document that will serve as the proposal to approve the SIP revision if adverse comments are filed. This direct final rule will be effective on July 1, 2003, without further notice unless we receive adverse comment by June 2, 2003. If EPA receives adverse comment, EPA will publish a timely withdrawal in the **Federal Register** informing the public that the rule will not take effect. EPA will address all public comments in a subsequent final rule based on the proposed rule. EPA will not institute a second comment period on this action. Any parties interested in commenting must do so at this time. Please note that if EPA receives adverse comment on an amendment, paragraph, or section of this rule and if that provision may be severed from the remainder of the rule, EPA may adopt as final those provisions of the rule that are not the subject of an adverse comment.

V. Statutory and Executive Order Reviews

A. General Requirements

Under Executive Order 12866 (58 FR 51735, October 4, 1993), this action is not a ''significant regulatory action'' and therefore is not subject to review by the Office of Management and Budget. For this reason, this action is also not subject to Executive Order 13211, ''Actions Concerning Regulations That Significantly Affect Energy Supply, Distribution, or Use'' (66 FR 28355, May 22, 2001). This action merely approves State law as meeting Federal requirements and imposes no additional requirements beyond those imposed by State law. Accordingly, the Administrator certifies that this rule will not have a significant economic impact on a substantial number of small entities under the Regulatory Flexibility Act (5 U.S.C. 601 *et seq.*). Because this rule approves pre-existing requirements under State law and does not impose any additional enforceable duty beyond that required by State law, it does not contain any unfunded mandate or significantly or uniquely affect small governments, as described in the Unfunded Mandates Reform Act of 1995 (Pub. L. 104–4). This rule also does not

have tribal implications because it will not have a substantial direct effect on one or more Indian tribes, on the relationship between the Federal government and Indian tribes, or on the distribution of power and responsibilities between the Federal government and Indian tribes, as specified by Executive Order 13175 (65 FR 67249, November 9, 2000). This action also does not have federalism implications because it does not have substantial direct effects on the States, on the relationship between the national government and the States, or on the distribution of power and responsibilities among the various levels of government, as specified in Executive Order 13132 (64 FR 43255, August 10, 1999). This action merely approves a State rule implementing a Federal standard, and does not alter the relationship or the distribution of power and responsibilities established in the Clean Air Act. This rule also is not subject to Executive Order 13045 ''Protection of Children from Environmental Health Risks and Safety Risks'' (62 FR 19885, April 23, 1997), because it is not economically significant.

In reviewing SIP submissions, EPA's role is to approve State choices, provided that they meet the criteria of the Clean Air Act. In this context, in the absence of a prior existing requirement for the State to use voluntary consensus standards (VCS), EPA has no authority to disapprove a SIP submission for failure to use VCS. It would thus be inconsistent with applicable law for EPA, when it reviews a SIP submission, to use VCS in place of a SIP submission that otherwise satisfies the provisions of the Clean Air Act. Thus, the requirements of section 12(d) of the National Technology Transfer and Advancement Act of 1995 (15 U.S.C. 272 note) do not apply. This rule does not impose an information collection burden under the provisions of the Paperwork Reduction Act of 1995 (44 U.S.C. 3501 *et seq.*).

B. Submission to Congress and the Comptroller General

The Congressional Review Act, 5 U.S.C. 801 *et seq.*, as added by the Small Business Regulatory Enforcement Fairness Act of 1996, generally provides that before a rule may take effect, the agency promulgating the rule must submit a rule report, which includes a copy of the rule, to each House of the Congress and to the Comptroller General of the United States. Section 804 exempts from section 801 the following types of rules: (1) Rules of particular applicability; (2) rules relating to agency management or personnel; and (3) rules of agency organization, procedure, or practice that do not substantially affect the rights or obligations of non-agency parties. 5 U.S.C. 804(3). EPA is not required to submit a rule report regarding today's action under section 801 because this is a rule of particular applicability establishing source-specific requirements for three named sources.

C. Petitions for Judicial Review

Under section 307(b)(1) of the Clean Air Act, petitions for judicial review of this action must be filed in the United States Court of Appeals for the appropriate circuit by July 1, 2003. Filing a petition for reconsideration by the Administrator of this final rule does not affect the finality of this rule for the purposes of judicial review nor does it extend the time within which a petition for judicial review may be filed, and shall not postpone the effectiveness of such rule or action. This action approving the Commonwealth's source-specific RACT requirements to control VOC and NO_X from three individual sources may not be challenged later in proceedings to enforce its requirements. (*See* section 307(b)(2).)

List of Subjects in 40 CFR Part 52

Environmental protection, Air pollution control, Incorporation by reference, Intergovernmental relations, Nitrogen dioxide, Ozone, Reporting and recordkeeping requirements, Volatile organic compounds.

Dated: March 31, 2003.

Thomas C. Voltaggio,

Acting Regional Administrator, Region III.

■ 40 CFR part 52 is amended as follows:

PART 52—[AMENDED]

■ 1. The authority citation for part 52 continues to read as follows:

Authority: 42 U.S.C. 7401 *et seq.*

Subpart NN—Pennsylvania

■ 2. Section 52.2020 is amended by adding paragraph (c)(200) to read as follows:

§ 52.2020 Identification of plan.

* * * * *

(c) * * *

(200) Revisions pertaining to VOC and NO_X RACT for major sources submitted on December 21, 2001.

(i) Incorporation by reference.

(A) Letter submitted on December 21, 2001 by the Pennsylvania Department of Environmental Protection transmitting source-specific VOC and/or NO_X RACT determinations, in the form of plan approvals or operating permits:

(B) Plan approval (PA); Operating permit (OP):

(*1*) Bethlehem Structural Products Corporation, Northampton County, OP–48–0013, effective October 24, 1996.

(*2*) International Paper Company, Erie Mill, Erie County, PA–25–028, effective December 21, 1994.

(*3*) National Fuel Gas Supply Corporation, Jefferson County, PA–33–144A, effective October 5, 1998.

(ii) Additional Material.

(A) Letters of October 15, 2002 and February 11, 2003 from the Pennsylvania Department of Environmental Protection (PADEP) to EPA transmitting materials related to the RACT permits listed in paragraph (c)(200)(i) of this section.

(B) Other materials submitted by PADEP in support of and pertaining to the RACT determinations for the sources listed in paragraph (c)(200)(i) of this section.

[FR Doc. 03–10658 Filed 5–1–03; 8:45 am]

BILLING CODE 6560–50–P

ENVIRONMENTAL PROTECTION AGENCY

40 CFR Part 271

[FRL–7493–3]

Virginia: Final Authorization of State Hazardous Waste Management Program Revision

AGENCY: Environmental Protection Agency (EPA).

ACTION: Withdrawal of immediate final rule.

SUMMARY: EPA is withdrawing the immediate final rule for Virginia: Final Authorization of State Hazardous Waste Management Program Revision published on March 13, 2003, which would have authorized changes to Virginia's hazardous waste program under the Resource Conservation and Recovery Act (RCRA). EPA stated in the immediate final rule that if EPA received written comments that opposed this authorization during the comment period, EPA would publish a timely notice of withdrawal in the **Federal Register**. Since EPA did receive comments that opposed this authorization, EPA is withdrawing the immediate final rule. EPA will address these comments in a subsequent final action based on the proposed rule also published on March 13, 2003, at 68 FR 12015.

DATES: As of May 2, 2003, EPA withdraws the immediate final rule published on March 13, 2003, at 68 FR 11981.

FOR FURTHER INFORMATION CONTACT: Joanne Cassidy, Mailcode 3WC21, RCRA State Programs Branch, U.S. EPA Region III, 1650 Arch Street, Philadelphia, PA 19103–2029, Phone number: (215) 814–3381.

SUPPLEMENTARY INFORMATION: Because EPA received written comments that opposed this authorization, EPA is withdrawing the immediate final rule for Virginia: Final Authorization of State Hazardous Waste Management Program Revision published on March 13, 2003, at 68 FR 11981, which would have authorized changes to Virginia's hazardous waste rules. EPA stated in the immediate final rule that if EPA received written comments that opposed this authorization during the comment period, EPA would publish a timely notice of withdrawal in the **Federal Register**. Since EPA received comments that opposed this action, today EPA is withdrawing the immediate final rule. EPA will address the comments received during the comment period in a subsequent final action based on the proposed rule also published on March 13, 2003. EPA will not provide for additional public comment during the final action.

Dated: April 25, 2003.

James W. Newsom,

Acting Regional Administrator, EPA Region III.

[FR Doc. 03–10893 Filed 5–1–03; 8:45 am]

BILLING CODE 6560–50–P

DEPARTMENT OF HOMELAND SECURITY

Federal Emergency Management Agency

44 CFR Part 64

[Docket No. FEMA–7807]

Suspension of Community Eligibility

AGENCY: Federal Emergency Management Agency, Emergency Preparedness and Response Directorate, Department of Homeland Security.

ACTION: Final rule.

SUMMARY: This rule identifies communities, where the sale of flood insurance has been authorized under the National Flood Insurance Program (NFIP), that are suspended on the effective dates listed within this rule because of noncompliance with the floodplain management requirements of the program. If the Federal Emergency Management Agency (FEMA) receives documentation that the community has adopted the required floodplain management measures prior to the effective suspension date given in this rule, the suspension will be withdrawn by publication in the **Federal Register**.

EFFECTIVE DATES: The effective date of each community's suspension is the third date (''Susp.'') listed in the third column of the following tables.

ADDRESSES: If you wish to determine whether a particular community was suspended on the suspension date, contact the appropriate FEMA Regional Office or the NFIP servicing contractor.

FOR FURTHER INFORMATION CONTACT: Edward Pasterick, Mitigation Division, 500 C Street, SW., Room 435, Washington, DC 20472, (202) 646–3443.

SUPPLEMENTARY INFORMATION: The NFIP enables property owners to purchase flood insurance which is generally not otherwise available. In return, communities agree to adopt and administer local floodplain management aimed at protecting lives and new construction from future flooding. Section 1315 of the National Flood Insurance Act of 1968, as amended, 42 U.S.C. 4022, prohibits flood insurance coverage as authorized under the National Flood Insurance Program, 42 U.S.C. 4001 *et seq.*; unless an appropriate public body adopts adequate floodplain management measures with effective enforcement measures. The communities listed in this document no longer meet that statutory requirement for compliance with program regulations, 44 CFR part 59 *et seq.* Accordingly, the communities will be suspended on the effective date in the third column. As of that date, flood insurance will no longer be available in the community. However, some of these communities may adopt and submit the required documentation of legally enforceable floodplain management measures after this rule is published but prior to the actual suspension date. These communities will not be suspended and will continue their eligibility for the sale of insurance. A notice withdrawing the suspension of the communities will be published in the **Federal Register**.

In addition, the Federal Emergency Management Agency has identified the special flood hazard areas in these communities by publishing a Flood Insurance Rate Map (FIRM). The date of the FIRM if one has been published, is indicated in the fourth column of the table. No direct Federal financial assistance (except assistance pursuant to the Robert T. Stafford Disaster Relief and Emergency Assistance Act not in connection with a flood) may legally be provided for construction or acquisition of buildings in the identified special flood hazard area of communities not participating in the NFIP and identified for more than a year, on the Federal Emergency Management Agency's initial flood insurance map of the community as having flood-prone areas (section 202(a) of the Flood Disaster Protection Act of 1973, 42 U.S.C. 4106(a), as amended). This prohibition against certain types of Federal assistance becomes effective for the communities listed on the date shown in the last column. The Administrator finds that notice and public comment under 5 U.S.C. 553(b) are impracticable and unnecessary because communities listed in this final rule have been adequately notified.

Each community receives a 6-month, 90-day, and 30-day notification addressed to the Chief Executive Officer that the community will be suspended unless the required floodplain management measures are met prior to the effective suspension date. Since these notifications have been made, this final rule may take effect within less than 30 days.

National Environmental Policy Act. This rule is categorically excluded from the requirements of 44 CFR part 10, Environmental Considerations. No environmental impact assessment has been prepared.

Regulatory Flexibility Act. The Administrator has determined that this rule is exempt from the requirements of the Regulatory Flexibility Act because the National Flood Insurance Act of 1968, as amended, 42 U.S.C. 4022, prohibits flood insurance coverage unless an appropriate public body adopts adequate floodplain management measures with effective enforcement measures. The communities listed no longer comply with the statutory requirements, and after the effective date, flood insurance will no longer be available in the communities unless they take remedial action.

Regulatory Classification. This final rule is not a significant regulatory action under the criteria of section 3(f) of Executive Order 12866 of September 30, 1993, Regulatory Planning and Review, 58 FR 51735.

Paperwork Reduction Act. This rule does not involve any collection of information for purposes of the Paperwork Reduction Act, 44 U.S.C. 3501 *et seq.*

Executive Order 12612, Federalism. This rule involves no policies that have federalism implications under Executive Order 12612, Federalism, October 26, 1987, 3 CFR, 1987 Comp.; p. 252.

Executive Order 12778, Civil Justice Reform. This rule meets the applicable standards of section 2(b)(2) of Executive

Order 12778, October 25, 1991, 56 FR 55195, 3 CFR, 1991 Comp.; p. 309.

List of Subjects in 44 CFR Part 64

Flood insurance, Floodplains.

■ Accordingly, 44 CFR part 64 is amended as follows:

PART 64—[AMENDED]

■ 1. The authority citation for part 64 continues to read as follows:

Authority: 42 U.S.C. 4001 *et seq.*; Reorganization Plan No. 3 of 1978, 3 CFR, 1978 Comp.; p. 329; E.O. 12127, 44 FR 19367, 3 CFR, 1979 Comp.; p. 376.

§ 64.6 [Amended]

■ 2. The tables published under the authority of § 64.6 are amended as follows:

State and location	Community No.	Effective date authorization/cancellation of sale of flood insurance in community	Current effective map date	Date certain Federal assistance no longer available in special flood hazard areas
Region I				
Maine:				
Newry, Town of, Oxford County	230337	December 30, 1975, Emerg.; September 4, 1985, Reg.; May 5, 2003, Susp.	May 5, 2003	May 5, 2003.
Turner, Town of, Androscoggin County	230010	July 29, 1975, Emerg.; June 19, 1985, Reg.; May 5, 2003, Susp.	do	Do.
Region III				
Delaware:				
Cheswold, Town of, Kent County	100004	April 16, 1975, Emerg.; January 7, 1977, Reg.; May 5, 2003, Susp.	do	Do.
Little Creek, Town of, Kent County	100015	July 30, 1975, Emerg.; January 17, 1979, Reg.; May 5, 2003, Susp.	do	Do.
Region IV				
Florida:				
Charlotte County, Unincorporated Areas	120061	August 6, 1971, Emerg.; August 6, 1971, Reg.; May 5, 2003, Susp.	do	Do.
Lee County, Unincorporated Areas	125124	October 30, 1970, Emerg.; September 19, 1984, Reg.; May 5, 2003, Susp.	do	Do.
Region V				
Illinois:				
Bradley, Village of, Kankakee County	170338	October 29, 1974, Emerg.; March 1, 1978, Reg.; May 5, 2003, Susp.	do	Do.
Kankakee, City of, Kankakee County	170339	May 29, 1973, Emerg.; April 17, 1978, Reg.; May 5, 2003, Susp.	do	Do.
Region IX				
California: Tehama County, Unincorporated Areas.	065064	April 23, 1971, Emerg.; June 1, 1982, Reg.; May 5, 2003, Susp.	do	Do.
Region III				
Pennsylvania:				
Carnegie, Borough of, Allegheny County.	420019	July 23, 1973, Emerg.; May 1, 1978, Reg.; May 15, 2003, Susp.	May 15, 2003	May 15, 2003.
Crafton, Borough of, Allegheny County	420026	April 15, 1974, Emerg.; December 19, 1980, Reg.; May 15, 2003, Susp.	do	Do.
Green Tree, Borough of, Allegheny County.	420040	June 27, 1974, Emerg.; July 16, 1981, Reg.; May 15, 2003, Susp.	do	Do.
Kennedy, Township of, Allegheny County.	42172	April 26, 1974, Emerg.; February 15, 1980, Reg.; May 15, 2003, Susp.	do	Do.
Mckees Rocks, Borough of, Allegheny County.	420052	November 3, 1972, Emerg.; May 16, 1977, Reg.; May 15, 2003, Susp.	do	Do.
Pittsburgh, City of, Allegheny County	420063	April 13, 1973, Emerg.; December 15, 1981, Reg.; May 15, 2003, Susp.	do	Do.
Robinson, Township of, Allegheny County.	421097	March 17, 1976, Emerg.; February 3, 1982, Reg.; May 15, 2003, Susp.	do	Do.
Rosslyn Farms, Borough of Allegheny County.	420069	February 7, 1975, Emerg.; May 19, 1981, Reg.; May 15, 2003, Susp.	do	Do.
Scott, Township of, Allegheny County	421100	October 9, 1974, Emerg.; May 3, 1982, Reg.; May 15, 2003, Susp.	do	Do.
Thornburg, Borough of, Allegheny County.	420077	January 16, 1980, Emerg.; July 18, 1983, Reg.; May 15, 2003, Susp.	do	
Region IV				
North Carolina:				
Aurora, Town of, Beaufort County	370014	June 4, 1975, Emerg.; January 3, 1986, Reg.; May 15, 2003, Susp.	do	Do.
Bath, Town of, Beaufort County	370288	April 8, 1987, Emerg.; April 8, 1987, Reg.; May 15, 2003, Susp.	do	Do.
Beaufort County, Unincorporated Areas	370013	June 9, 1972, Emerg.; February 4, 1987, Reg.; May 15, 2003, Susp.	do	Do.

State and location	Community No.	Effective date authorization/cancellation of sale of flood insurance in community	Current effective map date	Date certain Federal assistance no longer available in special flood hazard areas
Belhaven, Town of, Beaufort County	370015	October 27, 1972, Emerg.; May 16, 1977, Reg.; May 15, 2003, Susp.	.....do	Do.
Chocowinity, Town of, Beaufort County	370289	June 30, 1997, Reg.; May 15, 2003, Susp ..	.....do	Do.
Hyde County, Unincorporated Areas	370133	February 8, 1974, Emerg.; February 4, 1987, Reg.; May 15, 2003, Susp.	.....do	Do.
Pantego, Town of, Beaufort County	370016	November 24, 1975, Emerg.; August 5, 1985, Reg.; May 15, 2003, Susp.	.....do	Do.
Washington Park, Town of Beaufort County.	370268	September 29, 1972, Emerg.; November 22, 1976, Reg.; May 15, 2003, Susp.	.....do	Do.

Code for reading third column: Emerg.—Emergency; Reg.—Regular; Susp—Suspension.

Anthony S. Lowe,

Mitigation Division Director, Emergency Preparedness and Response Directorate.

[FR Doc. 03–10842 Filed 5–1–03; 8:45 am]

BILLING CODE 6718–05–P

DEPARTMENT OF HEALTH AND HUMAN SERVICES

Office of the Secretary

45 CFR Part 148

[CMS–2179–FC]

RIN 0938–AM42

Grants to States for Operation of Qualified High Risk Pools

AGENCY: Office of the Secretary, HHS.

ACTION: Final rule with comment period.

SUMMARY: This final rule with comment period implements a provision of the Trade Assistance Reform Act of 2002 by providing $40 million in Federal fiscal year 2003 and $40 million in Federal fiscal year 2004 to States that have incurred losses in connection with the operation of qualified high risk pools that meet certain criteria. This grant program implements section 2745 of the Public Health Service Act, as added by the Trade Adjustment Assistance Reform Act of 2002.

DATES: Effective date. These regulations are effective on June 2, 2003.

Public comments: We will consider comments if we receive them at the appropriate address, as provided below, no later than 5 p.m. on July 1, 2003.

Deadline for States to submit an application for losses incurred in their fiscal year 2002: States must submit an application to us by no later than September 30, 2003.

Deadline for States to submit an application for losses incurred in their fiscal year 2003: States must submit an application to us by no later than June 30, 2004.

Deadline for States to submit an application for losses incurred in their fiscal year 2004: States must submit an application to us by no later than June 30, 2005.

ADDRESSES: *Where to Submit an Application.* All initial applications and supplemental applications must be submitted to:

Centers for Medicare & Medicaid Services, Acquisition and Grants Group, Mail Stop C2–21–15, 7500 Security Boulevard, Baltimore, MD 21244–1850, Attn: Nicole Nicholson.

Public Comments. In commenting, please refer to file code CMS–2179–FC. Because of staff and resource limitations, we cannot accept comments by facsimile (FAX) transmission or e-mail.

Mail written comments (one original and two copies) to the following address ONLY:

Centers for Medicare & Medicaid Services, Department of Health and Human Services, Attention: CMS–2179–FC, PO Box 8016, Baltimore, MD 21244–8016.

Please allow sufficient time for mailed comments to be timely received in the event of delivery delays.

If you prefer, you may deliver (by hand or courier) your written comments (one original and two copies) to one of the following addresses:

Room 445–G, Hubert H. Humphrey Building, 200 Independence Avenue, SW., Washington, DC 20201, or Room C5–14–03, 7500 Security Boulevard, Baltimore, MD 21244–1850.

(Because access to the interior of the HHH Building is not readily available to persons without Federal Government identification, commenters are encouraged to leave their comments in the CMS drop slots located in the main lobby of the building. A stamp-in clock is available for persons wishing to retain a proof of filing by stamping in and retaining an extra copy of the comments being filed.)

Comments mailed to the addresses indicated as appropriate for hand or courier delivery may be delayed and could be considered late.

For information on viewing public comments, see the beginning of the **SUPPLEMENTARY INFORMATION** section.

FOR FURTHER INFORMATION CONTACT: James Mayhew, (410) 786–9244.

SUPPLEMENTARY INFORMATION:

Inspection of Public Comments: Comments received timely will be available for public inspection as they are received, generally beginning approximately 3 weeks after publication of a document, at the headquarters of the Centers for Medicare & Medicaid Services, 7500 Security Boulevard, Baltimore, Maryland 21244, Monday through Friday of each week from 8:30 a.m. to 4 p.m. To schedule an appointment to view public comments, phone 410–786–7195.

I. Background

A. General

Section 2745(b) of the Public Health Service Act (PHS Act), as added by section 201(b) of the Trade Adjustment Assistance Reform Act of 2002, authorizes the Secretary to make grants to States for up to 50 percent of the losses they incur in the operation of qualified high risk pools , and appropriates the necessary funds. In order to qualify for a grant, a State's risk pool must meet the definition of a qualified risk pool, as described in section II of this preamble, as well as other applicable eligibility requirements described in that section.

B. Availability and Use of Funds

The total amount appropriated for these grants is $80 million ($40 million each in Federal fiscal years (FY) 2003 and 2004). We have two years to obligate funding for each fiscal year. As directed by the statute, we will allocate

funds in accordance with a formula based upon the number of uninsured individuals in each eligible State. This formula, described in section II of this preamble and in § 148.312(b) of the final rule, was developed using the most accurate and current statistics available on the uninsured in each State. Eligible States may apply for grants for amounts up to 50 percent of losses they incur in connection with the operation of a qualified high risk pool. A State must have a qualified high risk pool that has incurred a loss in order to be eligible for a grant.

II. Provisions of the Final Rule

We are adding a new subpart E to 45 CFR 148, to provide for grants to States that incur losses in connection with operating qualified high risk pools. This subpart implements section 2745 of the PHS Act. Its purpose is to provide grants to States that have qualified high risk pools that meet the specific requirements described in § 148.310. It also provides specific instructions on how to apply for the grants and outlines the grant review and grant award processes.

We are adding § 148.306, which describes the statutory basis and scope of the regulation. We are also adding § 148.308, ''Definitions.'' CMS stands for Centers for Medicare & Medicaid Services. For the purposes of subpart E, a ''qualified high risk pool'' is a high risk pool that meets the conditions described in § 148.128(a)(2)(ii): (1) It provides to all eligible individuals, as defined in § 148.103, health insurance coverage (or comparable coverage) that does not impose any preexisting condition exclusion or affiliation periods for coverage of an eligible individual; and (2) provides for premium rates and covered benefits for the coverage consistent with the standards included in the National Association of Insurance Commissioners (NAIC) Model Health Plan for Uninsurable Individuals Act (as in effect as of August 21, 1996) but only if the model has been revised in State regulations to meet all of the requirements of this part and title 27 of the PHS Act.

A ''loss'' means the difference between expenses incurred by a qualified high risk pool, including payment of claims and administrative expenses, and premiums collected by the pool. A ''standard risk rate'' means a rate developed by a State using reasonable actuarial techniques and taking into account the premium rates charged by the other insurers offering health insurance coverage to individuals in the same geographical service area to which the rate applies. The standard rate may be adjusted based upon age, sex, and geographical location.

We are adding § 148.310, which describes eligibility requirements for a grant. A State must meet all of the following requirements to be eligible for a grant:

(a) The State has a qualified high risk pool as defined in § 148.308.

(b) The pool restricts premiums charged under the pool to no more than 150 percent of the premium for applicable standard risk rates for the State.

(c) The pool offers a choice of two or more coverage options through the pool.

(d) The pool has in effect a mechanism reasonably designed to ensure continued funding of losses incurred by the State after the end of fiscal year 2004 in connection with the operation of the pool.

(e) The pool has incurred a loss in a period described in § 148.314.

We are adding § 148.312, which describes the amount of a grant payment. Paragraph (a) provides that an eligible State may receive a grant to fund up to 50 percent of the losses incurred in the operation of its qualified high risk pool during the period for which it is applying. Paragraph (b) provides that we will allocate funds to each eligible State in accordance with the following formula:

(1) The number of uninsured individuals is calculated for each eligible State by taking a 3-year average of the number of uninsured individuals in that State in the Current Population Survey (CPS) of the Census Bureau. For grants based upon State fiscal years 2002 and 2003, a 3-year average will be calculated using numbers available as of May 1, 2003. For grants based upon State fiscal year 2004, a 3-year average will be calculated using numbers available as of March 1, 2005. Calculation of the State 3-year average will be done by the Census Bureau and provided to CMS.

(2) Based upon the CPS numbers, the State's percentage of the total uninsured population of eligible States is calculated and then multiplied by $40 million to determine the State's maximum allotment for the fiscal year in question. For example, if the most current 3-year average of uninsured individuals in State A is one million, and the 3-year average of uninsured individuals for all eligible States was 10 million, State A would have 10 percent of the uninsured population of the eligible States. Accordingly, State A's allotment would be 10 percent of $40 million, or $4 million, for the fiscal year in question.

Paragraph (c) states that the amount awarded to each eligible State will be the lesser of the 50 percent of losses incurred by its qualified risk pool for the fiscal year in question or its allotment under the formula.

We are adding § 148.314, which describes the periods for which eligible States may apply for grants; application deadlines; and allocation methodology. Under paragraph (a), an eligible State may apply for a grant to fund losses incurred in the operation of its qualified risk pool during the State's fiscal year 2002, 2003, or 2004. A State may apply for losses incurred in a partial fiscal year if a partial year audit is done. Under paragraph (b), an eligible State may only be awarded a maximum of two grants, with one grant per fiscal year. A grant for a partial fiscal year counts as a full grant. We also explain how we determine which grants will be funded out of which Federal fiscal year funds. This will depend in part on when the State submits its initial application.

In paragraph (c), we indicate that the deadlines for submitting grant applications are stated in § 148.316(d).

In paragraph (d), we explain how Federal funds will be distributed to States that may qualify at different points in time. The first group of States are those that submit applications for their fiscal year 2002 losses. (We will refer to those States as ''02 States.'') These States, that meet all the eligibility requirements and incur losses in connection with a qualified high risk pool in State fiscal year 2002, may submit a grant request, which must be received by September 30, 2003. The first year grant for these States will be funded with Federal fiscal year 2003 funds. The 02 States may be eligible for a second grant to fund their fiscal year 2003 losses. The deadline for those grant requests will be June 30, 2004. As explained below, these grants will be funded with Federal fiscal year 2004 funds. (If a State does not receive a grant for State fiscal year 2003, however, it still might qualify for its fiscal year 2004, as discussed below.)

The second group of States are those that do not submit applications for their 2002 fiscal years (or do submit applications but do not qualify) and that first qualify with respect to losses incurred in their fiscal year 2003. (We will refer to these States as ''03 States.'') These States may submit a grant request, which must be received by June 30, 2004. The first year grant for these States will be funded with Federal fiscal year 2003 funds. The 03 States (or any 02 States that did not apply or receive approval for losses incurred during State fiscal year 2003) may be eligible

for a second grant to fund their fiscal year 2004 losses. The deadline for those grant requests will be June 30, 2005. Those grants will be funded with Federal fiscal year 2004 funds. The third group of States are those that first qualify with respect to losses incurred in their fiscal year 2004. (We will refer to these States as ''04 States''). These States may submit a grant request, which must be received by June 30, 2005. The first year grant for these States will be funded with Federal fiscal year 2004 funds. The 04 States will not be eligible for a second grant because the availability of Federal funds will have expired.

In paragraph (e), we explain how excess funds will be redistributed. The initial grants to the 02 States and the 03 States will come from the Federal fiscal year 2003 funds. After the deadline for 02 grants, we will determine how many States have submitted applications for grants. We will estimate, based upon contacts with other States, how many requests are likely to be received from 03 States. We will make an initial allotment for 02 States based upon these estimates. In other words, we will reserve some of the Federal fiscal year 2003 funds after the 02 States grant requests have been received in anticipation of requests being made by 03 States. Based upon expressions of interest we have received from States, we believe we have a reasonable estimate of the States that are likely to first qualify in their fiscal year 2003. We will hold in reserve our best estimate of the maximum amount of funds needed to provide full allotments to these States. If there are excess reserves (that is, the Department withholds more money than was necessary to provide grants to the 03 States), the excess funds will be proportionally redistributed to the 02 States and the 03 States, but not to exceed 50 percent of losses incurred by the States. In other words, the size of the first year grants will be increased retroactively for these States. In the unlikely event that the Department should underestimate the reserve needed to fund grants to all eligible 03 States, money will be taken from the Federal fiscal year 2004 funds to assure that all eligible 03 States receive grants on an equivalent basis. We do not expect it to have a major impact on funding of the additional grants from the Federal fiscal year 2004 funds. Similarly, the Department will reserve some of the Federal fiscal year 2004 money to fund the second year grants for 02 and 03 States and the first year grants for the 04 States.

We believe that this method of distribution of the Federal funds is the fairest because it allows for States that qualified for a grant in their fiscal year 2002 to immediately apply for funding and it also allows for the States who may not immediately qualify to enact the changes needed in order to qualify and apply for funding in either their fiscal year 2003 or fiscal year 2004. In other words, this method is set up to accommodate as many States as possible.

We are adding § 148.316, which describes the application package that the individual State must submit to document that it has met the requirements for a grant. At a minimum, the package must include a completed standard form application kit (see paragraph (b) of this section) along with the following information:

(1) *History and description of the qualified high risk pool.* Provide a detailed description of the qualified high risk pool that includes the following:

(i) Brief history, including date of inception.

(ii) Enrollment criteria (including provisions for the admission of eligible individuals, as defined in § 148.103) and number of enrollees.

(iii) Description of how coverage is provided administratively in the qualified high risk pool (that is, self-insured, through a private carrier, etc.).

(iv) Benefits options and packages offered in the qualified high risk pool to both eligible individual (as defined in § 148.103) and other applicants.

(v) Outline of plan benefits and coverage offered in the pool and the plan benefits and coverage of the two most popular policies in the State's private individual market.

(vi) Premiums charged (in terms of dollars and in percentage of standard risk rate) and other cost-sharing mechanisms, such as co-pays and deductibles, imposed on enrollees (both eligible individuals (as defined in § 148.103) and non-eligible individuals if a distinction is made).

(vii) How the standard risk rate for the State is calculated and when it was last calculated.

(viii) Revenue sources for the qualified high risk pool, including current funding mechanisms and, if different, future funding mechanisms. Provide current projections of future income.

(ix) Copies of all governing authorities of the pool, including statutes, regulations, and plan of operation.

(2) *Accounting of risk pool losses.* Provide a detailed accounting of claims paid, administrative expenses, and premiums collected for the fiscal year for which the grant is being requested. Indicate the timing of the fiscal year upon which the accounting is based. Provide the methodology of projecting losses and expenses, and include current projections of future operating losses (this information is needed to judge compliance with the requirement in § 148.310(d) of this final rule).

(3) *Contact person.* Identify the name, position title, address, e-mail address, and telephone number of the person to contact for further information and questions.

In paragraph (b)(1) of § 148.316, the following standard forms must be completed with an original signature and enclosed as part of the proposal:

SF–424 Application for Federal Assistance
SF–424A Budget Information
SF–424B Assurances—Non-Construction Program
SF–LLL Disclosure of Lobbying Activities
Biographical Sketch
Additional Assurances

These forms can be downloaded from the following Web site: *http://www.cms.hhs.gov/researchers/priorities/grants.asp.*

Paragraph (b)(2) specifies that all other narrative in the application must be submitted on 8½ x 11″ white paper.

In paragraph (c), we describe what applicants are required to submit. Applicants are required to submit an original and two copies of the application. Submissions by facsimile (fax) transmissions will not be accepted.

Applications mailed through the U.S. Postal Service or a commercial delivery service will be considered ''on time'' if received by the close of business on the closing date, or postmarked (first class mail) by the date specified in the **DATES** section of this final rule. If express, certified, or registered mail is used, the applicant should obtain a legible dated mailing receipt from the U.S. Postal Service. Private metered postmarks are not acceptable as proof of timely mailings.

In paragraph (d), we describe the deadlines States must meet for submitting an application for losses they incur in a specified fiscal year.

(1) *Deadline for States to submit an application for losses incurred in their fiscal year 2002.* States must submit an application to us by no later than September 30, 2003.

(2) *Deadline for States to submit an application for losses incurred in their fiscal year 2003.* States must submit an application to us by no later than June 30, 2004.

(3) *Deadline for States to submit an application for losses incurred in their fiscal year 2004.* States must submit an application to us by no later than June 30, 2005.

In paragraph (e), we indicate where to submit an application. All initial applications and supplemental applications must be submitted to:

Centers for Medicare & Medicaid Services, Acquisition and Grants Group, Mail Stop C2–21–15, 7500 Security Boulevard, Baltimore, MD 21244–1850, Attn: Nicole Nicholson.

We added § 148.318, which describes how we will review grant applications. Paragraph (a) indicates that this grant program is not listed by the Secretary under 45 CFR 100.3, and therefore the grant program is not subject to review by States under 45 CFR part 100, which implements Executive Order 12372, ''Intergovernmental Review of Federal Programs.''

Paragraph (b) states that a team consisting of staff from CMS and the Department of Health and Human Services will review all applications. The team will meet as necessary on an ongoing basis as applications are received.

Paragraph (c) describes the eligibility criteria. To be eligible for a grant, a State must submit sufficient documentation to demonstrate that its high risk pool meets the eligibility requirements described in § 148.310. A State must include sufficient documentation of the losses incurred in the operation of the qualified high risk pool in the period for when it is applying. Paragraph (d) indicates that if the review team determines that a State meets the eligibility requirements described in § 148.310, the review team will use the following additional criteria in reviewing the applications:

(1) *Documentation of expenses incurred during operation of the qualified high risk pool.* The losses and expenses incurred in the operation of a State's pool are sufficiently documented.

(2) *Funding mechanism.* The State has outlined funding sources, such as assessments and State general revenues, which can cover the projected costs and are reasonably designed to ensure continued funding of losses a State incurs in connection with the operation of the qualified high risk pool after fiscal year 2004.

We added § 148.320, which describes our grant award process. Paragraph (a) provides that we will notify each State applicant in writing of CMS' decision on its application. If we award a grant to the State applicant, the award letter will contain the following terms and conditions:

(i) All funds awarded to the grantee under this program must be used exclusively for the operation of a qualified high risk pool that meets the eligibility requirements for this program.

(ii) The grantee must keep sufficient records of the grant expenditures for audit purposes (see 45 CFR part 92).

(iii) The grantee may be required to submit quarterly progress and financial reports under 45 CFR 92.

Paragraph (b) specifies that an applicant that receives a grant award must submit a letter of acceptance to CMS' Acquisition and Grants Group within 30 days of the date of the award agreeing to the terms and conditions of the award letter.

III. Waiver of Proposed Rulemaking

We ordinarily publish a notice of proposed rulemaking in the **Federal Register** and invite public comment on the proposed rule. The notice of proposed rulemaking includes a reference to the legal authority under which the rule is proposed, and the terms and substance of the proposed rule or a description of the subjects and issues involved. This procedure can be waived, however, if an agency finds good cause that a notice-and-comment procedure is impracticable, unnecessary, or contrary to the public interest and incorporates a statement of the finding and its reasons in the rule issued. In this instance, we find that notice-and-comment is contrary to the public interest because it is beneficial to the eligible States and to the uninsured population in the eligible States that funding for qualified high risk pool is available as quickly as possible. The sooner the funds become available for States to fund losses incurred in the operation of the qualified high risk pools, the sooner that the pools can expand their eligibility to provide coverage to more uninsured individuals.

Therefore, we find good cause to waive the notice of proposed rulemaking and to issue this final rule on an interim basis. We are providing a 60-day public comment period.

IV. Response to Comments

Because of the large number of items of correspondence we normally receive on **Federal Register** documents published for comment, we are not able to acknowledge or respond to them individually. We will consider all comments we receive by the date and time specified in the **DATES** section of this preamble, and, if we proceed with a subsequent document, we will respond to the comments in the preamble to that document.

V. Collection of Information Requirements

Under the Paperwork Reduction Act (PRA) of 1995, we are required to provide 60-day notice in the **Federal Register** and solicit public comment before a collection of information is submitted to the Office of Management and Budget (OMB) for review and approval. In order to fairly evaluate whether an information collection should be approved by OMB, section 3506(c)(2)(A) of the PRA requires that we solicit comment on the following issues:

- The need for the information collection and its usefulness in carrying out the proper functions of our agency.
- The accuracy of our estimate of the information collection burden.
- The quality, utility, and clarity of the information to be collected.
- Recommendations to minimize the information collection burden on the affected public, including automated collection techniques.

We are soliciting public comment on each of these issues for the section that contains information collection requirements.

Sections 148.316 Grant Application Instructions

This section requires an applicant to submit the application in writing and states what it must contain.

Sections 148.320 Grant Awards

Paragraph (b) of this section requires an applicant that is granted an award to send CMS a letter of acceptance.

These two information collection requirements together have been estimated to take 40 hours per applicant/grantee to fulfill, for a total of 800 hours per year, based on a maximum of 20 applicants. This burden has been approved by the Office of Management and Budget under approval number 0938–0887 through June 2003.

Section 148.320 Grant Awards

Paragraph (a)(2)(iii) of this section states that the grantee may be required to submit quarterly progress and financial reports under pursuant to part 92 of this title.

The burden associated with requirement is the time it will take the grantee to complete the reports, if requested. At a maximum, a grantee would have to complete 8 reports; however, we anticipate that the grantees will need to file only semi-annually, thus completing only four reports. We estimate that a progress report will take 30 minutes to complete and a financial

report 30 minutes as well. This would total 2 hours per grantee per year, or 40 hours per year (2 hrs. × 20 grantees).

If you comment on these information collection and record keeping requirements, please mail copies directly to the following:

Centers for Medicare & Medicaid Services, Office of Strategic Operations and Regulatory Affairs, DRDI, DRD–B, Attn: Julie Brown, Room C5–16–03, 7500 Security Boulevard, Baltimore, MD 21244–1850.

Office of Information and Regulatory Affairs, Office of Management and Budget, Room 10235, New Executive Office Building, Washington, DC 20503, Attn: Brenda Aguilar, CMS Desk Officer.

VI. Regulatory Impact Statement

A. Overall Impact

We have examined the impacts of this rule as required by Executive Order 12866 (September 1993, Regulatory Planning and Review), the Regulatory Flexibility Act (RFA) (September 16, 1980, Pub. L. 96–354), section 1102(b) of the Social Security Act, the Unfunded Mandates Reform Act of 1995 (Pub. L. 104–4), and Executive Order 13132.

Executive Order 12866 (as amended by Executive Order 13258, which merely reassigns responsibility of duties) directs agencies to assess all costs and benefits of available regulatory alternatives and, if regulation is necessary, to select regulatory approaches that maximize net benefits (including potential economic, environmental, public health and safety effects, distributive impacts, and equity). A regulatory impact analysis (RIA) must be prepared for major rules with economically significant effects ($100 million or more in any 1 year). Since the amount of appropriations under this rule will not total more than $40 million per fiscal year, it is not a major rule.

The RFA requires agencies to analyze options for regulatory relief of small businesses. For purposes of the RFA, small entities include small businesses, nonprofit organizations, and government agencies. Most hospitals and most other providers and suppliers are small entities, either by nonprofit status or by having revenues of $6 million to $29 million in any 1 year. Individuals and States are not included in the definition of a small entity. Since this rule is implementing a grant program for the States, this rule will not have a significant impact on small businesses.

In addition, section 1102(b) of the Act requires us to prepare a regulatory impact analysis if a rule may have a significant impact on the operations of a substantial number of small rural hospitals. This analysis must conform to the provisions of section 604 of the RFA. For purposes of section 1102(b) of the Act, we define a small rural hospital as a hospital that is located outside of a Metropolitan Statistical Area and has fewer than 100 beds. Again, since this rule is implementing a grant program for the States, it will not have a significant impact on small hospitals.

Section 202 of the Unfunded Mandates Reform Act of 1995 also requires that agencies assess anticipated costs and benefits before issuing any rule that may result in expenditure in any 1 year by State, local, or tribal governments, in the aggregate, or by the private sector, of $110 million. Since this rule is strictly an appropriation, there are no unfunded mandates included in the rule.

Executive Order 13132 establishes certain requirements that an agency must meet when it promulgates a proposed rule (and subsequent final rule) that imposes substantial direct requirement costs on State and local governments, preempts State law, or otherwise has Federalism implications. Since this rule is strictly an appropriation of $80 million to the States to fund losses incurred in the operation of qualified high risk pools, it will have a beneficial impact on State governments since the funds will be used to provide health insurance coverage to uninsured individuals and will not impose any direct requirement costs on State and local governments.

B. Anticipated Effects

This rule will have a positive impact on approximately 22 States that currently operate qualified high risk pools in that it will make funds available to those States to fund losses incurred in the operation of their high risk pools. Additionally, in order to be eligible for funding, the high risk pools will have to lower or maintain their premium cap at no higher than 150 percent of the standard rate in the private market. These grants, therefore, will serve as an incentive for States to keep their risk pool premiums at a level that will be affordable and accessible to more uninsured individuals. It will not significantly impact upon other entities, including providers, nor will it have any significant impact on the Medicare and Medicaid programs.

C. Alternatives Considered

The Trade Adjustment Assistance Reform Act of 2002 was very prescriptive in its criteria for eligibility for operation grants to high risk pools. It also provided a specific definition of a high risk pool and outlined the allocation formula for the grants. In addition to following the statute, we had to comply with the Department grant award procedure requirements. Because of these requirements, and because we wanted to make the money available as quickly as possible, we did not consider other major alternatives on how to award the grants.

D. Conclusion

For the reasons indicated elsewhere in this section, we are not preparing analyses for either the RFA or section 1102(b) of the Act because we have determined, and we certify, that this rule will not have a significant economic impact on a substantial number of small entities or a significant impact on the operations of a substantial number of small rural hospitals.

In accordance with the provisions of Executive Order 12866, the Office of Management and Budget reviewed this regulation.

List of Subjects in 45 CFR 148

Administrative practice and procedure, Health care, Health insurance, Penalties, Reporting and record keeping requirements.

■ For the reasons set forth in the preamble, the Department of Health and Human Services amends 45 CFR subchapter B part 148 as set forth below:

PART 148—REQUIREMENTS FOR THE INDIVIDUAL HEALTH INSURANCE MARKET

■ 1. The authority citation for part 148 continues to read as follows:

Authority: Secs 2741 through 2763, 2791, and 2792 of the Public Health Service Act (42 U.S.C. 300gg–41 through 300gg–63, 300gg–91, and 300gg–92).

■ 2. A new subpart E is added to read as follows:

Subpart E—Grants to States for Operation of Qualified High Risk Pools

Sec.
148.306 Basis and scope.
148.308 Definitions.
148.310 Eligibility requirements for a grant.
148.312 Amount of grant payment.
148.314 Periods during which eligible States may apply for a grant.
148.316 Grant application instructions.
148.318 Grant application review.
148.320 Grant awards.

Subpart E—Grants to States for Operation of Qualified High Risk Pools

§ 148.306 Basis and scope.

This subpart implements section 2745 of the Public Health Service Act (the PHS Act). It provides for grants to States

that have qualified high risk pools that meet the specific requirements described in § 148.310. It also provides specific instructions on how to apply for the grants and outlines the grant review and grant award processes.

§ 148.308 Definitions.

For the purposes of this subpart, the following definitions apply:

CMS stands for Centers for Medicare & Medicaid Services.

Loss means the difference between expenses incurred by a qualified high risk pool, including payment of claims and administrative expenses, and the premiums collected by the pool.

Qualified high risk pool means a high risk pool that meets the conditions described in § 148.128(a)(2)(ii):

(1) It provides to all eligible individuals, as defined in § 148.103, health insurance coverage (or comparable coverage) that does not impose any preexisting condition exclusion or affiliation periods for coverage of an eligible individual; and

(2) Provides for premium rates and covered benefits for the coverage consistent with the standards included in the National Association of Insurance Commissioners (NAIC) Model Health Plan for Uninsurable Individuals Act (as in effect as of August 21, 1996) but only if the model has been revised in State regulations to meet all of the requirements of this part and title 27 of the PHS Act.

Standard risk rate means a rate developed by a State using reasonable actuarial techniques and taking into account the premium rates charged by other insurers offering health insurance coverage to individuals in the same geographical service area to which the rate applies. The standard rate may be adjusted based upon age, sex, and geographical location.

§ 148.310 Eligibility requirements for a grant.

A State must meet all of the following requirements to be eligible for a grant:

(a) The State has a qualified high risk pool as defined in § 148.308.

(b) The pool restricts premiums charged under the pool to no more than 150 percent of the premium for applicable standard risk rates for the State.

(c) The pool offers a choice of two or more coverage options through the pool.

(d) The pool has in effect a mechanism reasonably designed to ensure continued funding of losses incurred by the State after the end of fiscal year 2004 in connection with the operation of the pool.

(e) The pool has incurred a loss in a period described in § 148.314.

§ 148.312 Amount of grant payment.

(a) An eligible State may receive a grant to fund up to 50 percent of the losses incurred in the operation of its qualified high risk pool during the period for which it is applying.

(b) Funds will be allocated to each eligible State in accordance with the following formula:

(1) The number of uninsured individuals is calculated for each eligible State by taking a 3-year average of the number of uninsured individuals in that State in the Current Population Survey (CPS) of the Census Bureau. For grants based upon State fiscal years 2002 and 2003, a 3-year average will be calculated using numbers available as of May 1, 2003. For grants based upon State fiscal year 2004, a 3-year average will be calculated using numbers available as of March 1, 2005. Calculation of the State 3-year average will be done by the Census Bureau and provided to CMS.

(2) Based upon the CPS numbers, the State's percentage of the total uninsured population of eligible States is calculated and then multiplied by $40 million to determine the State's maximum allotment for the fiscal year in question. The following example illustrates the formula in paragraph (b):

(i) The most current 3-year average of uninsured individuals in State A is one million, and the 3-year average of uninsured individuals for all eligible States is 10 million. State A has 10 percent of the uninsured population of the eligible States.

(ii) Under this example, State A's allotment would be 10 percent of $40 million, or $4 million, for the fiscal year in question.

(c) The amount awarded to each eligible State will be the lesser of the 50 percent of losses incurred by its qualified risk pool for the fiscal year in question or its allotment under the formula.

§ 148.314 Periods during which eligible States may apply for a grant.

(a) *General Rule.* A State that meets the eligibility requirements in § 148.310 may apply for a grant to fund losses that were incurred during the State's fiscal year 2002, 2003, or 2004 in connection with the operation of its qualified high risk pool. A State may apply for losses incurred in a partial fiscal year if a partial year audit is done.

(b) *Maximum number of grants.* An eligible State may only be awarded a maximum of two grants, with one grant per fiscal year. A grant for a partial fiscal year counts as a full grant.

(c) *Deadline for submitting grant applications.* The deadlines for submitting grant applications are stated in § 148.316(d).

(d) *Initial distribution of grant funds.* States that meet all of the eligibility requirements in § 148.310 and submit timely requests in accordance with paragraph (c) of this section will receive an initial distribution of grant funds using the following methodology:

(1) *Initial grant applications submitted for losses incurred in State fiscal year 2002 (hereafter referred to as 02 States).* Initial grants to States that submit an application for losses incurred in State fiscal year 2002 will be funded with Federal fiscal year 2003 funds.

(2) *Initial grant applications submitted for losses incurred in State fiscal year 2003 (hereafter referred to as 03 States).* Initial grants to States that did not submit an application for losses in State fiscal year 2002 (or submitted an application but did not qualify) and first qualified for a grant for losses incurred in State fiscal year 2003 will be funded with Federal fiscal year 2003 funds.

(3) *Initial grant allocations.* Initial grant allocations will be determined by taking all grant applications described in paragraphs (d)(1) and (2) of this section, and allocating in accordance with § 148.312.

(4) *Other applications.* All other grants will be funded in the first instance with Federal fiscal year 2004 funds.

(e) *Reallocation of funds.* The initial grants to the 02 States and the 03 States will come from the Federal fiscal year 2003 funds. After the deadline for 02 grants, the Department will determine how many States have submitted applications for grants. The Department will then estimate, based on contacts with other States, how many requests are likely to be received from 03 States. The Department will make an initial allotment for 02 States based on these estimates. The Department will reserve some of the Federal fiscal year 2003 funds after the 02 States grant requests have been received in anticipation of requests being made by 03 States. The Department will hold in reserves adequate funds to provide full allotments to these States. If there are excess reserves (that is, the Department withholds more money than was necessary to provide grants to the 03 States), the excess funds will be proportionally redistributed to the 02 States and the 03 States, but not to exceed 50 percent of losses incurred by the States. The size of the first year grants will be increased retroactively for these States. Similarly, the Department will reserve some of the Federal fiscal

year 2004 money to fund the second year grants for 02 and 03 States and the first year grants for the 04 States (that is, States that initially qualify based upon losses incurred in their fiscal year 2004).

§ 148.316 Grant application instructions.

(a) *Application package.* The individual States must compile an application package that documents that it has met the requirements for a grant. At a minimum, the package must include a completed standard form application kit (see paragraph (b) of this section) along with the following information:

(1) *History and description of the qualified high risk pool.* Provide a detailed description of the qualified high risk pool that includes the following:

(i) Brief history, including date of inception.

(ii) Enrollment criteria (including provisions for the admission of eligible individuals as defined in § 148.103) and number of enrollees.

(iii) Description of how coverage is provided administratively in the qualified high risk pool (that is, self-insured, through a private carrier, etc.).

(iv) Benefits options and packages offered in the qualified high risk pool to both eligible individual (as defined in § 148.103) and other applicants.

(v) Outline of plan benefits and coverage offered in the pool and the plan benefits and coverage of the two most popular policies in the State's private individual market.

(vi) Premiums charged (in terms of dollars and in percentage of standard risk rate) and other cost-sharing mechanisms, such as co-pays and deductibles, imposed on enrollees (both eligible individuals (as defined in § 148.103) and non-eligible individuals if a distinction is made).

(vii) How the standard risk rate for the State is calculated and when it was last calculated.

(viii) Revenue sources for the qualified high risk pool, including current funding mechanisms and, if different, future funding mechanisms. Provide current projections of future income.

(ix) Copies of all governing authorities of the pool, including statutes, regulations and plan of operation.

(2) *Accounting of risk pool losses.* Provide a detailed accounting of claims paid, administrative expenses, and premiums collected for the fiscal year for which the grant is being requested. Indicate the timing of the fiscal year upon which the accounting is based. Provide the methodology of projecting losses and expenses, and include current projections of future operating losses (this information is needed to judge compliance with the requirements in § 148.310(d)).

(3) *Contact person.* Identify the name, position title, address, e-mail address, and telephone number of the person to contact for further information and questions.

(b) *Standard form application kit.*

(1) *Forms.* (i) The following standard forms must be completed with an original signature and enclosed as part of the application package:

SF–424 Application for Federal Assistance
SF–424A Budget Information
SF–424B Assurances '' Non-Construction Program
SF–LLL Disclosure of Lobbying Activities
Biographical Sketch
Additional Assurances

(ii) These forms can be downloaded from the following Web site:

http://www.cms.hhs.gov/researchers/priorities/grants.asp.

(2) *Other narrative.* All other narrative in the application must be submitted on 8½ x 11″ white paper.

(c) *Submission of application package.*

(1) Applicants are required to submit an original and two copies of the application. Submissions by facsimile (fax) transmissions will not be accepted.

(2) Applications mailed through the U.S. Postal Service or a commercial delivery service will be considered ''on time'' if received by the close of business on the closing date, or postmarked (first class mail) by the date specified in the paragraph (d) of this section. If express, certified, or registered mail is used, the applicant should obtain a legible dated mailing receipt from the U.S. Postal Service. Private metered postmarks are not acceptable as proof of timely mailings.

(d) *Application deadlines.*

(1) *Deadline for States to submit an application for losses incurred in their fiscal year 2002.* States must submit an application to us by no later than September 30, 2003.

(2) *Deadline for States to submit an application for losses incurred in their fiscal year 2003.* States must submit an application to us by no later than June 30, 2004.

(3) *Deadline for States to submit an application for losses incurred in their fiscal year 2004.* States must submit an application to us by no later than June 30, 2005.

(e) *Where to submit an application.* All initial applications and supplemental applications must be submitted to:

Centers for Medicare & Medicaid Services, Acquisition and Grants Group, Mail Stop C2–21–15, 7500 Security Boulevard, Baltimore, MD 21244–1850, Attn: Nicole Nicholson.

§ 148.318 Grant application review.

(a) *Executive Order 12372.* This grant program is not listed by the Secretary under § 100.3 of this title, and therefore the grant program is not subject to review by States under part 100 of this title, which implements Executive Order 12372, ''Intergovernmental Review of Federal Programs'' (see part 100 of this title).

(b) *Review team.* A team consisting of staff from CMS and the Department of Health and Human Services will review all applications. The team will meet as necessary on an ongoing basis as applications are received.

(c) *Eligibility criteria.* To be eligible for a grant, a State must submit sufficient documentation that its high risk pool meets the eligibility requirements described in § 148.310. A State must include sufficient documentation of the losses incurred in the operation of the qualified high risk pool in the period for when it is applying.

(d) *Review criteria.* If the review team determines that a State meets the eligibility requirements described in § 148.310, the review team will use the following additional criteria in reviewing the applications:

(1) *Documentation of expenses incurred during operation of the qualified high risk pool.* The losses and expenses incurred in the operation of a State's pool are sufficiently documented.

(2) *Funding mechanism.* The State has outlined funding sources, such as assessments and State general revenues, which can cover the projected costs and are reasonably designed to ensure continued funding of losses a State incurs in connection with the operation of the qualified high risk pool after fiscal year 2004.

§ 148.320 Grant awards.

(a) *Notification and award letter.*

(1) Each State applicant will be notified in writing of CMS's decision on its application.

(2) If the State applicant is awarded a grant, the award letter will contain the following terms and conditions:

(i) All funds awarded to the grantee under this program must be used exclusively for the operation of a qualified high risk pool that meets the eligibility requirements for this program.

(ii) The grantee must keep sufficient records of the grant expenditures for audit purposes (see part 92 of this title).

(iii) The grantee may be required to submit quarterly progress and financial reports under part 92 of this title.

(b) *Grantees letter of acceptance.* Grantees must submit a letter of acceptance to CMS' Acquisition and Grants Group within 30 days of the date of the award agreeing to the terms and conditions of the award letter.

(Catalog of Federal Domestic Assistance Program No. 93779, Centers for Medicare and Medicaid Services Research, Demonstration, and Evaluations)

Dated: March 16, 2003.

Thomas A. Scully,

Administrator, Centers for Medicare & Medicaid Services.

Approved: April 18, 2003.

Tommy G. Thompson,

Secretary.

[FR Doc. 03–10713 Filed 4–28–03; 8:45 am]

BILLING CODE 4120–01–P

FEDERAL COMMUNICATIONS COMMISSION

47 CFR Part 1

[WT Docket No. 99–266; FCC 03–51]

Practice and Procedure

AGENCY: Federal Communications Commission.

ACTION: Final rule.

SUMMARY: In this document, the Commission clarifies rules relating to tribal lands bidding credits that were established to provide incentives for wireless telecommunications carriers to serve individuals living on tribal lands. In the *Second Report and Order,* the Commission extends the time period during which winning bidders can negotiate with the relevant tribes to obtain the certification needed to obtain the credit. The Commission also clarifies various administrative matters involved in implementing the credit.

DATES: Effective July 1, 2003.

FOR FURTHER INFORMATION CONTACT: Roger Noel or Linda Chang, Wireless Telecommunications Bureau, at (202) 418–0620.

SUPPLEMENTARY INFORMATION: This is a summary of the Federal Communications Commission's *Second Report and Order (2nd R&O),* FCC 03–51, adopted March 7, 2003, and released March 14, 2003. The full text of the *2nd R&O* is available for public inspection during regular business hours at the FCC Reference Information Center, 445 12th St., SW., Room CY–A257, Washington, DC 20554. The complete text may be purchased from the Commission's duplicating contractor: Qualex International, 445 12th Street, SW., Room CY–B402, Washington, DC 20554, telephone 202–863–2893, facsimile 202–863–2898, or via e-mail at *qualexint@aol.com.*

Synopsis of Second Report and Order

I. Background

1. In June 2000, the Commission adopted bidding credits for use by winning bidders who pledge to deploy facilities and provide service to federally recognized tribal areas that have a telephone service penetration rate at or below 70 percent. In setting out the bidding credit, the Commission noted that communities on tribal lands have had less access to telecommunications services than any other segment of the U.S. population. *See* Extending Wireless Telecommunications Services to Tribal Lands, WT Docket No. 99–266, *Report and Order,* 65 FR 47349 (August 2, 2000) (*R&O*), and *Further Notice of Proposed Rulemaking,* 65 FR 47366 (August 2, 2000) (*FNPRM*).

2. The *R&O* provided that, in order to obtain a bidding credit in a particular market, a winning bidder must indicate on its long-form application (FCC Form 601) that it intends to serve tribal lands in that market. Following the long-form application filing deadline, the applicant has 90 calendar days to amend its application to identify the tribal lands to be served, and provide certification from the tribal government(s) that: (1) It will allow the bidder to site facilities and provide service on its tribal land(s), in accordance with the Commission's rules; (2) it has not and will not enter into an exclusive contract with the applicant precluding entry by other carriers, and will not unreasonably discriminate against any carrier; and (3) its tribal land is a qualifying tribal land as defined in the Commission's rules, *i.e.,* an area that has a telephone penetration rate at or below 70 percent. In addition, at the conclusion of the 90-day period, the applicant must amend its long-form application to file a certification that it will comply with the bidding credit build-out requirement, and that it will consult with the tribal government regarding the siting of facilities and deployment of service on the tribal land. Upon receipt by the Commission of the certifications, the bidding credit is awarded and the applicant makes payment of the final net adjusted bid amount. If the required certifications are not provided at the conclusion of the 90-day period, the bidding credit is not awarded and the applicant is required to pay the balance on the original gross bid amount in order to be awarded the licenses.

3. In order to ensure that applicants awarded bidding credits actually deploy facilities and provide service to tribal lands, the Commission imposed performance requirements as a condition of obtaining the bidding credit. The Commission required that a licensee construct and operate its system to cover 75 percent of the population of the qualifying tribal land within three years of the grant of the license. While this 75 percent benchmark is higher than the construction benchmarks applicable to auctioned wireless licenses generally, the Commission determined that it would ensure that only carriers that are committed to serving tribal lands will receive bidding credits, and that wireless telecommunications services will be deployed rapidly to underserved tribal areas. In the *R&O,* the Commission required that, at the conclusion of the three-year period, licensees file a notification of construction indicating that they have met the 75 percent construction requirement on the tribal lands for which the credit was awarded. If the licensee fails to comply with any condition, it is required to repay the bidding credit plus interest thirty days after the conclusion of the construction period. In the event the licensee fails to repay the amount, the license automatically cancels.

4. In limiting the scope of the bidding credit to federally recognized tribal areas with telephone penetration rates equal to or less than 70 percent, the Commission concluded that the credits would target the tribal communities with the greatest need for access to telecommunications service. Although the Commission acknowledged that there are some non-tribal areas with penetration rates lower than the national average, it was determined that almost all non-tribal areas have penetration rates greater than 70 percent and that non-tribal areas have penetration rates significantly greater than most tribal areas. Accordingly, the Commission found it appropriate to limit the program to tribal lands with a 70 percent or less penetration rate. The Commission did not, however, foreclose the possibility of extending the credit both to non-tribal areas and to areas with higher penetration rates.

5. In the *FNPRM,* the Commission solicited comment on ways the bidding credit could be extended to encourage further deployment of wireless telecommunications services. The Commission specifically sought

comment on whether it should award bidding credits to carriers who commit to serve non-tribal areas with a 70 percent or less penetration rate, or tribal and/or non-tribal areas with penetration levels above 70 percent but significantly below the national average. Further, comment was requested regarding whether the Commission should expand the program to give transferable bidding credits to be used in future auctions to existing licensees in already-established wireless services who deploy and provide service to unserved tribal communities. The Commission also asked whether it should make credits available to licensees that enter into partitioning agreements with tribal authorities that allow the tribal government to provide service, either directly or through negotiation with a third-party carrier.

II. Discussion

A. Modification and Clarification of Bidding Credit Procedures

6. *Certification Procedure.* When the Commission adopted the tribal lands bidding credit in the R&O, it established the method by which a bidding credit would be calculated, as well as the application process involved in obtaining a bidding credit. Since the inception of the tribal lands bidding credit, there have been 10 auctions, with 375 winning bidders purchasing 10,479 licenses. However, only 27 winning bidders to date have initially indicated on their long-form applications that they would be seeking the tribal lands bidding credit, and of those applicants, only five submitted the required 90-day certifications. Upon review of this proceeding, the Commission finds that the small number of applications seeking the credit is due, at least in part, to the administrative process established by the Commission. Specifically, the Commission finds that the 90-day deadline for obtaining the certifications from the applicable tribal government(s) makes it extremely difficult to qualify for the credit. The 90-day deadline and certifications were established: (1) To ensure prompt issuance of licenses to winning bidders; (2) to provide a time frame for making contact with tribal governments and obtaining requisite certifications; and (3) to ensure that the wireless carrier intends to provide service to the tribal land. Because ninety days may not be a sufficient amount of time for licensees and tribal authorities to complete the certification process, the Commission extends the tribal lands certification period to 180 days. Accordingly, a winning bidder claiming a tribal lands bidding credit will now have 180 days to amend its long-form application to identify the tribal lands to be served, and provide the required certification from the tribal government. Further, the winning bidder will have 180 days to file a certification that it will comply with the tribal lands build-out requirements, and consult with the tribal government regarding the siting of facilities and deployment of service on the tribal land. If the winning bidder fails to submit the required certifications within the 180-day period, the bidding credit will not be awarded, and the winning bidder will be required to pay the balance on the original gross bid amount in order to obtain the license.

7. Full or partial assignments of licenses involving tribal lands bidding credits. An issue that was inadvertently omitted in the *R&O* is the impact of license assignments on licenses with tribal lands bidding credit construction/repayment obligations. The Commission therefore clarifies that if the license is assigned to another entity, the construction/repayment obligations associated with the credit are transferred as well. Because all obligations of the license automatically transfer to the assignee, the Commission will not require the assignee to seek re-certification where the original licensee received certifications from the appropriate tribal authorities. It is important to note that an assignee contracting with a licensee to transfer a license for which a tribal lands bidding credit was received bears the risk that the tribal government may not allow the assignee to deploy facilities on its land. The Commission expects that parties interested in obtaining wireless licenses will exercise due diligence in identifying whether or not a tribal lands bidding credit construction obligation is associated with the license, and, therefore, take into account the heightened construction obligation, the dependence of the credit on obtaining the consent of the tribal government, and the potential for a repayment penalty in case the construction requirement is not met within the original three-year time frame. It is up to the assignee to verify that the tribe will consent to allowing the assignee access to its lands.

8. Also, the Commission clarifies that in partial license transfers involving geographic partitioning, the tribal land must be wholly contained within either the assignor's or assignee's proposed license area after the partition. The Commission will not permit, for example, a tribal area for which a credit was awarded to be ''split'' between partitioned areas because this would be inconsistent with the original purpose of issuing the credit, *i.e.,* to ensure that at least 75 percent of the tribal land is served. Where a partition occurs, the construction/repayment obligation will attach to the license for the partitioned area that encompasses the tribal land for which the credit was awarded. However, in partial license transfers involving spectrum disaggregation (but not partitioning), the construction/repayment obligation will be presumed to remain with the original licensee whose stated intention was to serve the tribal land unless the parties to the transaction inform us otherwise. As is the case with partitioning, spectrum covering the tribal land must be disaggregated in its entirety (*i.e.* a disaggregation involving only a portion of a tribal area subject to a bidding credit will not be permitted).

9. *Notification of Construction.* In the *R&O,* the Commission did not clearly set out the notification of construction procedures applicable to licensees that are granted tribal lands bidding credits. Pursuant to the goals of section 309(j)(4)(B) of the Act, the Commission has set out performance requirements for the various services, with alternative construction obligations for those licensees using tribal land bidding credits. As noted, the Commission imposed more stringent construction requirements for those licensees that choose to utilize the tribal lands bidding credit in order to ensure that only those most committed to building out their facilities will receive bidding credits and that service is deployed as quickly as possible. In order to verify compliance with the tribal lands construction requirement, any licensee employing a bidding credit must file a notification of construction (FCC Form 601, Schedule K) electronically at the conclusion of the three-year construction period along with an attachment stating affirmatively that it is providing coverage to 75 percent of the population of the tribal area for which the credit was awarded. In its notification of construction, the licensee must provide the total population of the tribal area covered by its license as well as the number of persons it is serving in the tribal area. If the licensee fails to make an adequate showing that it has met the 75 percent benchmark, it will be required to repay the bidding credit, plus interest, thirty days after the conclusion of the construction period. 47 CFR 1.2110(f)(3)(vii). Failure to repay this amount will result in automatic termination of the license. 47 CFR 1.946(c).

10. Penalty for failure to construct and failure to timely repay bidding credit. The Commission also takes this opportunity to correct an omission in the rules implemented in connection with the *R&O,* in which the Commission stated that a licensee's failure to comply with build-out requirements, and subsequent failure to repay the bidding credit, plus interest, thirty days after the conclusion of the construction period, would result in automatic termination of the licensee's license, *i.e.,* termination without any further notification being sent to the licensee, opportunity for a hearing, or other Commission action. This penalty will now be expressly codified in Part 1 of the Commission's rules.

B. Use of Bidding Credits in Non-Tribal Areas or Areas With Telephone Penetration Rates of More Than 70 Percent

11. In the *FNPRM,* the Commission sought comment on whether it should apply the bidding credit to non-tribal areas on the same terms and conditions as for tribal areas, or alternatively, whether it should extend the bidding credit to areas (tribal and non-tribal) with penetration levels greater than 70 percent, but below the national average of 94 percent. As noted, very few commenters submitted responses to the *FNPRM.* Those who filed comments generally support extending bidding credits to entities seeking to provide service to non-tribal areas with telephone penetration rates below the national average.

12. The Commission concludes that it is premature to expand the program to non-tribal areas or to areas with penetration rates of greater than 70 percent at this time. Because this program is still in its early stages and few entities have taken advantage of the bidding credit thus far, the Commission cannot yet determine whether it would be constructive to expand the use of the bidding credit to non-tribal areas generally. Moreover, the Commission is concerned about the paucity of comment regarding this issue. It is necessary to have a more substantial record as to whether the use of bidding credits is appropriate to encourage deployment of services into non-tribal areas, particularly from those most familiar with dealing with rural and high-cost service issues. Similarly, the Commission believes the record is insufficient at this time to support expanding the use of the bidding credit to areas having telephone penetration rates of greater than 70 percent. However, in an effort to develop a more complete and up-to-date record on possible adjustment of the penetration rate threshold, the Commission seeks comment in its *Second Further Notice of Proposed Rulemaking* on information from the 2000 Census regarding increases in tribal penetration rates that has recently been released by the Census Bureau. *See* Extending Wireless Telecommunications Services to Tribal Lands, WT Docket No. 99–266, *Second Further Notice of Proposed Rulemaking,* FCC 03–51, adopted March 7, 2003, and released March 14, 2003.

C. Applying Bidding Credits to Existing Licenses

13. The Commission noted in the *R&O* that the current tribal lands bidding credit can be applied only in the auction in which it is obtained. Accordingly, the bidding credit is not available to carriers with existing licenses that were acquired in prior auctions or through transfer or assignment. The Commission therefore asked in the *FNPRM* whether a more flexible form of credit should be made available to existing licensees who have constructed facilities, using currently-licensed spectrum to provide service to qualifying tribal lands. Under this approach, carriers who use their existing spectrum to provide service to such areas could receive bidding credits that could be used in future auctions. Further, the Commission sought comment on whether such a credit should be transferable to third parties for use in future auctions. The Commission also sought comment on its legal authority under section 309(j) of the Communications Act to adopt the flexible bidding credit.

14. Although the Commission continues to believe that the tribal lands bidding credit is a valuable means to encourage greater deployment of telecommunications services into underserved tribal areas, the Commission concludes that in light of its still-limited experience with the bidding credit program, it should not extend the program to already-licensed carriers or make the credit transferable at this juncture. The Commission believes that before taking such a step, additional time is needed to determine the effectiveness of the program as currently structured in meeting its intended goals. The Commission also finds that the limited comment it has received in this proceeding does not provide sufficient support or guidance for such an expansion of the program. Accordingly, the Commission declines to extend the program to already-licensed carriers or make the credit transferable at this time.

D. Transferable Bidding Credits for Licensees That Partition Tribal Areas

15. In the *FNPRM*, the Commission solicited comment on whether bidding credits should be made available to carriers that enter into partitioning agreements with tribal governments to facilitate deployment of service to tribal lands. The Commission proposed that a credit would be awarded to a geographic area licensee that partitioned portions of its license area covering tribal lands to the appropriate tribal government. Again, the Commission received limited comment regarding this issue, and therefore it concludes that the record does not at this time support expanding the bidding credit program as proposed.

III. Procedural Matters

A. Paperwork Reduction Act Analysis

16. The actions taken in the *2nd R&O* have been analyzed with respect to the Paperwork Reduction Act of 1995 (PRA), Pub. L. No. 104–13, and found to impose new or modified reporting and recordkeeping requirements or burdens on the public. Implementation of these new or modified reporting and recordkeeping requirements will be subject to approval by the Office of Management and Budget (OMB) as prescribed by the PRA, and will go into effect upon announcement in the **Federal Register** of OMB approval.

B. Final Regulatory Flexibility Act Analysis.

17. As required by the Regulatory Flexibility Act of 1980, as amended (RFA), an Initial Regulatory Flexibility Analysis (IRFA) was incorporated in the *FNPRM*. The Commission sought written public comment on the proposals in the *FNPRM*, including comment on the IRFA. This present Final Regulatory Flexibility Analysis (FRFA) conforms to the RFA.

Need for, and Objectives of, the 2nd R&O.

18. In the *2nd R&O*, the Commission clarifies rules previously adopted in the *R&O* and *FNPRM* in WT Docket 99–266 to provide incentives for wireless telecommunications carriers to serve individuals living on tribal lands. In that *R&O*, the Commission authorized the grant of bidding credits to winning bidders who deploy facilities and provide service to federally-recognized tribal areas that have a telephone service penetration rate below 70 percent. In the present item, the Commission clarifies, on its own motion, administrative matters involved in implementing the bidding credit, such as the process by which carriers obtain certifications

permitting them to deploy facilities on tribal lands. This 2nd *R&O* also addresses issues raised in the *FNPRM*. In the *FNPRM*, the Commission requested comment on whether it should expand the use of bidding credits. Specifically, the Commission sought comment as to whether to: (1) Apply bidding credits to entities who undertake to serve non-tribal areas and/or tribal areas with telephone penetration levels above 70 percent, but significantly below the national penetration average; (2) award bidding credits for use in future auctions to existing geographic area licensees who deploy facilities in unserved tribal communities; and, (3) grant bidding credits to licensees who enter into partitioning agreements with tribal governments that enable tribal entities to provide service, either directly or by way of a third-party carrier. It is the Commission's goal to ensure that all Americans have access to telecommunications service.

19. While the Commission continues to believe that the tribal lands bidding credit is a useful device in improving telephone penetration rates on tribal lands, it concludes that the specific measures proposed in the Commission's *FNPRM* to encourage greater deployment should not be adopted at this time. Given the nascent state of the tribal lands bidding credit program, as well as the lack of a comprehensive record supporting the proposed extensions of the bidding credit, the Commission believes that it is premature to expand the use of bidding credits as proposed.

Summary of Significant Issues Raised by Public Comments in Response to the IRFA

20. No comments were filed that specifically addressed the rules and policies proposed in the IRFA.

Description and Estimate of the Number of Small Entities To Which the Rules Will Apply.

21. The RFA directs agencies to provide a description of, and where feasible, an estimate of the number of small entities that may be affected by the rules adopted herein. 5 U.S.C. 604(a)(3). The RFA generally defines the term ''small entity'' as having the same meaning as the terms ''small business,'' ''small organization,'' and ''small governmental jurisdiction.'' 5 U.S.C. 601(6). In addition, the term ''small business'' has the same meaning as the term ''small business concern'' under the Small Business Act. 5 U.S.C. 601(3) (incorporating by reference the definition of ''small business concern'' in the Small Business Act, 15 U.S.C. 632). A ''small business concern'' is one which: (1) Is independently owned and operated; (2) is not dominant in its field of operation; and (3) satisfies any additional criteria established by the Small Business Administration (SBA). 15 U.S.C. 632.

22. Cellular Licensees. The SBA has developed a small business size standard for small businesses in the category ''Cellular and Other Wireless Telecommunications.'' 13 CFR 121.201, North American Industry Classification System (NAICS) code 513322. Under that SBA category, a business is small if it has 1,500 or fewer employees. According to the Bureau of the Census, only twelve firms from a total of 1238 cellular and other wireless telecommunications firms operating during 1997 had 1,000 or more employees. Therefore, even if all twelve of these firms were cellular telephone companies, nearly all cellular carriers were small businesses under the SBA's definition. In addition, the Commission notes that there are 1807 cellular licenses; however, a cellular licensee may own several licenses. According to the most recent *Trends in Telephone Service* data, 858 carriers reported that they were engaged in the provision of either cellular service, Personal Communications Service (PCS), or Specialized Mobile Radio telephony services, which are placed together in that data. *See Trends in Telephone Service*, Industry Analysis Division, Wireline Competition Bureau , Table 5.3—Number of Telecommunications Service Providers that are Small Businesses (May 2002). The Commission has estimated that 291 of these are small under the SBA small business size standard. Accordingly, based on this data, the Commission estimates that not more than 291 cellular service providers will be affected by these revised rules.

23. 220 MHz Radio Service—Phase I Licensees. The 220 MHz service has both Phase I and Phase II licenses. Phase I licensing was conducted by lotteries in 1992 and 1993. There are approximately 1,515 such non nationwide licensees and four nationwide licensees currently authorized to operate in the 220 MHz band. The Commission has not developed a definition of small entities specifically applicable to such incumbent 220 MHz Phase I licensees. To estimate the number of such licensees that are small businesses, the Commission applies the definition under the SBA rules applicable to ''Cellular and Other Wireless Telecommunication'' companies. This category provides that a small business is a wireless company employing no more than 1,500 persons. According to the Bureau of the Census, only twelve firms from a total of 1238 cellular and other wireless telecommunications firms operating during 1997 had 1,000 or more employees. If this general ratio continues in 2002 in the context of Phase I 220 MHz licensees, the Commission estimates that nearly all such licensees are small businesses under the SBA's small business standard.

24. 220 MHz Radio Service—Phase II Licensees. The Phase II 220 MHz service is a new service, and is subject to spectrum auctions. In the *220 MHz Third Report and Order*, the Commission adopted a small business size standard for defining ''small'' and ''very small'' businesses for purposes of determining their eligibility for special provisions such as bidding credits and installment payments. *See* Amendment of Part 90 of the Commission's Rules to Provide for the Use of the 220–222 MHz Band by the Private Land Mobile Radio Service, PR Docket No. 89–552, *Third Report and Order*, 62 FR 16004 (April 3, 1997). This small business standard indicates that a ''small business'' is an entity that, together with its affiliates and controlling principals, has average gross revenues not exceeding $15 million for the preceding three years. A ''very small business'' is defined as an entity that, together with its affiliates and controlling principals, has average gross revenues that do not exceed $3 million for the preceding three years. The SBA has approved these small size standards. Auctions of Phase II licenses commenced on September 15, 1998, and closed on October 22, 1998. In the first auction, 908 licenses were auctioned in three different sized geographic areas: three nationwide licenses, 30 Regional Economic Area Group (EAG) Licenses, and 875 Economic Area (EA) Licenses. Of the 908 licenses auctioned, 683 were sold. Thirty-nine small businesses won licenses in the first 220 MHz auction. The second auction included 225 licenses: 216 EA licenses and 9 EAG licenses. Fourteen companies claiming small business status won 158 licenses.

25. 700 MHz Guard Band Licenses. In the *700 MHz Guard Band Order*, the Commission adopted a small business size standard for ''small businesses'' and ''very small businesses'' for purposes of determining their eligibility for special provisions such as bidding credits and installment payments. *See* Service Rules for the 746–764 MHz Bands, and Revisions to Part 27 of the Commission's Rules, WT Docket No. 99–168, *Second Report and Order*, 65 FR 17594 (April 4, 2000). A small

business is an entity that, together with its affiliates and controlling principals, has average gross revenues not exceeding $40 million for the preceding three years. Additionally, a ''very small business'' is an entity that, together with its affiliates and controlling principals, has average gross revenues that are not more than $15 million for the preceding three years. An auction of 52 Major Economic Area (MEA) licenses commenced on September 6, 2000, and closed on September 21, 2000. Of the 104 licenses auctioned, 96 licenses were sold to 9 bidders. Five of these bidders were small businesses that won a total of 26 licenses. A second auction of 700 MHz Guard Band licenses commenced on February 13, 2001 and closed on February 21, 2001. All eight of the licenses auctioned were sold to three bidders. One of these bidders was a small business that won a total of two licenses.

26. Lower 700 MHz Band Licenses. The Commission adopted criteria for defining three groups of small businesses for purposes of determining their eligibility for special provisions such as bidding credits. *See* Reallocation and Service Rules for the 698–746 MHz Spectrum Band (Television Channels 52–59), GN Docket No. 01–74, *Report and Order*, 67 FR 5491 (February 6, 2002). The Commission defined a small business as an entity that, together with its affiliates and controlling principals, has average gross revenues not exceeding $40 million for the preceding three years. A very small business is defined as an entity that, together with its affiliates and controlling principals, has average gross revenues that are not more than $15 million for the preceding three years. Additionally, the lower 700 MHz Service has a third category of small business status that may be claimed for Metropolitan/Rural Service Area (MSA/RSA) licenses. The third category is entrepreneur, which is defined as an entity that, together with its affiliates and controlling principals, has average gross revenues that are not more than $3 million for the preceding three years. An auction of 704 licenses (one license in each of the 734 MSAs/RSAs and one license in each of the six Economic Area Groupings [EAGs]) commenced on August 27, 2002, and closed on September 18, 2002. Of the 740 licenses available for auction, 484 licenses were sold to 102 winning bidders. Seventy-two of the winning bidders claimed small business, very small business or entrepreneur status and won a total of 329 licenses.

27. Private and Common Carrier Paging. In the *Paging Second Report and Order*, the Commission adopted a small size standard for ''small businesses'' for purposes of determining their eligibility for special provisions such as bidding credits and installment payments. Revision of Part 22 and Part 90 of the Commission's Rules to Facilitate Future Development of Paging Systems, WT Docket No. 96–18, *Second Report and Order*, 62 FR 11616 (March 12, 1997). A small business is an entity that, together with its affiliates and controlling principals, has average gross revenues not exceeding $15 million for the preceding three years. The SBA has approved this definition. An auction of Metropolitan Economic Area (MEA) licenses commenced on February 24, 2000, and closed on March 2, 2000. Of the 985 licenses auctioned, 440 were sold. Fifty-seven companies claiming small business status won. At present, there are approximately 24,000 Private Paging site-specific licenses and 74,000 Common Carrier Paging licenses. According to the most recent *Trends in Telephone Service*, 608 carriers reported that they were engaged in the provision of either paging or ''other mobile'' services. Of these, the Commission estimates that 589 are small, under the SBA-approved small business size standard. The Commission estimates that the majority of private and common carrier paging providers would qualify as small entities under the SBA definition.

28. Broadband Personal Communications Service (PCS). The broadband PCS spectrum is divided into six frequency blocks designated A through F, and the Commission has held auctions for each block. The Commission has created a small business size standard for Blocks C and F as an entity that has average gross revenues of less than $40 million in the three previous calendar years. *See* Amendment of Parts 20 and 24 of the Commission's Rules—Broadband PCS Competitive Bidding and the Commercial Mobile Radio Service Spectrum Cap, WT Docket No. 96–59, *Report and Order*, 61 FR 33859 (1996); *see also* 47 CFR 24.720(b). For Block F, an additional small business size standard for ''very small business'' was added and is defined as an entity that, together with their affiliates, has average gross revenues of not more than $15 million for the preceding three calendar years. These small business size standards, in the context of broadband PCS auctions, have been approved by the SBA. No small businesses within the SBA-approved small business size standards bid successfully for licenses in Blocks A and B. There were 90 winning bidders that qualified as small entities in the Block C auctions. A total of 93 ''small'' and ''very small'' business bidders won approximately 40 percent of the 1,479 licenses for Blocks D, E, and F. On March 23, 1999, the Commission reauctioned 347 C, D, E, and F Block licenses; there were 48 small business winning bidders. Based on this information, the Commission concludes that the number of small broadband PCS licensees will include the 90 winning C Block bidders and the 93 qualifying bidders in the D, E, and F blocks plus the 48 winning bidders in the re-auction, for a total of 231 small entity PCS providers as defined by the SBA small business standards and the Commission's auction rules. On January 26, 2001, the Commission completed the auction of 422 C and F Broadband PCS licenses in Auction No. 35. Of the 35 winning bidders in this auction, 29 qualified as ''small'' or ''very small'' businesses.

29. Narrowband PCS. The Commission has auctioned nationwide and regional licenses for narrowband PCS. There are 11 nationwide and 30 regional licensees for narrowband PCS. The Commission does not have sufficient information to determine whether any of these licensees are small businesses within the SBA-approved definition for radiotelephone companies. In March 2002, 106 MTA and BTA narrowband PCS licenses were granted to 4 licensees. Each of the licensees are small or very small businesses.

30. Specialized Mobile Radio (SMR). Pursuant to 47 CFR 90.814(b)(1), the Commission has established a small business size standard for purposes of auctioning 900 MHz SMR licenses, 800 MHz SMR licenses for the upper 200 channels, and 800 MHz SMR licenses for the lower 230 channels on the 800 MHz band as a firm that has had average annual gross revenues of $15 million or less in the three preceding calendar years. 47 CFR 90.814(b)(1). The SBA has approved this small business size standard for the 800 MHz and 900 MHz auctions. Sixty winning bidders for geographic area licenses in the 900 MHz SMR band qualified as small businesses under the $15 million size standard. The auction of the 525 800 MHz SMR geographic area licenses for the upper 200 channels began on October 28, 1997, and was completed on December 8, 1997. Ten (10) winning bidders for geographic area licenses for the upper 200 channels in the 800 MHz SMR band qualified as small businesses under the $15 million size standard.

31. The auction of the 1,050 800 MHz SMR geographic area licenses for the

General Category channels began on August 16, 2000, and was completed on September 1, 2000. Eleven (11) winning bidders for geographic area licenses for the General Category channels in the 800 MHz SMR band qualified as small businesses under the $15 million size standard. In an auction completed on December 5, 2000, a total of 2,800 Economic Area licenses in the lower 80 channels of the 800 MHz SMR service were sold. Of the 22 winning bidders, 19 claimed ''small business'' status. Thus, 40 winning bidders for geographic licenses in the 800 MHz SMR band qualified as small business. In addition, there are numerous incumbent site-by-site SMR licensees on the 800 and 900 MHz band. The Commission awards bidding credits in auctions for geographic area 800 MHz and 900 MHz SMR licenses to firms that had revenues of no more than $15 million in each of the three previous calendar years. This analysis applies to SMR providers in the 800 MHz and 900 MHz bands that either hold geographic area licenses or have obtained extended implementation authorizations. The Commission does not know how many firms provide 800 MHz or 900 MHz geographic area SMR pursuant to extended implementation authorizations, nor how many of these providers have annual revenues of no more than $15 million. One firm has over $15 million in revenues. The Commission assumes, for purposes of this analysis, that all of the remaining existing extended implementation authorizations are held by small entities, as that small business size standard is established by SBA.

Description of Projected Reporting, Recordkeeping, and Other Compliance Requirements

32. The *2nd R&O* modifies the certification process that wireless carriers must follow in order to obtain a tribal lands bidding credit. The Commission extends the time period during which winning bidders can negotiate to obtain the certification needed to obtain the credit, however, the Commission declines to expand the credit beyond its current scope.

Steps Taken To Minimize Significant Economic Impact on Small Entities, and Significant Alternatives Considered

33. The RFA requires an agency to describe any significant, specifically small business, alternatives that it has considered in developing its approach, which may include the following four alternatives (among others): (1) The establishment of differing compliance or reporting requirements or timetables that take into account the resources available to small entities; (2) the clarification, consolidation, or simplification of compliance or reporting requirements under the rule for small entities; (3) the use of performance, rather than design, standards; and (4) an exemption from coverage of the rule, or any part thereof, for small Entities. 5 U.S.C. 603(c).

34. A certification period of 90 days was previously identified in the final regulatory flexibility analysis in the *R&O*. In the *2nd R&O*, the Commission extends the time period in which an applicant must obtain a certification from tribal governments regarding the siting of facilities and deployment of service on tribal lands. The *2nd R&O* extends the certification period from 90 days to 180 days in order to allow applicants more time to conduct necessary research and negotiate with tribal governments. The change the Commission is adopting in the certification process is minor, and will not have additional significant economic impact on tribal governments or carriers seeking to serve tribal lands. The extension of the certification period from 90 to 180 days benefits all carriers, particularly small entities.

35. Further, the *2nd R&O* clarifies partitioning and disaggregation rules specific to licensees electing to use the tribal lands bidding credit. In clarifying these rules, the Commission considered whether or not to apply its existing partitioning and disaggregation rules to situations in which a tribal lands bidding credit is utilized. While the partitioning and disaggregation rules are slightly more restrictive in situations in which tribal lands bidding credits are involved, the Commission believes these rules further its original goal of promoting service to tribal lands by helping to ensure that those using bidding credits fulfill their construction obligations.

36. Report to Congress: The Commission will send a copy of the *2nd R&O*, including the FRFA, in a report to be sent to Congress pursuant to the Congressional Review Act. *See* 5 U.S.C. 801(a)(1)(A). In addition, the Commission will send a copy of the *2nd R&O*, including the FRFA, to the Chief Counsel for Advocacy of the Small Business Administration. A copy of the *2nd R&O* and FRFA (or summaries thereof) will also be published in the **Federal Register**.

IV. Ordering Clauses

37. Pursuant to the authority of sections 1, 4(i), 303(r), and 309(j) of the Communications Act of 1934, as amended, 47 U.S.C. 151, 154(i), 303(r), and 309(j), the rule changes specified below are adopted.

38. The rule changes set forth below will become effective July 1, 2003.

List of Subjects in 47 CFR Part 1

Practice and procedure.

Federal Communications Commission.

Marlene H. Dortch,

Secretary.

Rule Changes

■ For the reasons discussed in the Preamble, the Federal Communications Commission amends 47 CFR part 1 as follows:

PART 1—PRACTICE AND PROCEDURE

■ 1. The authority citation for part 1 continues to read as follows:

Authority: 47 U.S.C. 151, 154(i), 154(j), 155, 225, 303(r), 309 and 325(e).

■ 2. Section 1.2110 is amended by revising paragraphs (f)(3)(i), (ii) (vi), (vii), and (viii) to read as follows:

§ 1.2110 Designated entities.

* * * * *

(f) * * *

(3) * * *

(i) Qualifying tribal land means any federally recognized Indian tribe's reservation, Pueblo, or Colony, including former reservations in Oklahoma, Alaska Native regions established pursuant to the Alaska Native Claims Settlement Act (85 Stat. 688), and Indian allotments, that has a wireline telephone subscription rate equal to or less than seventy (70) percent based on the most recently available U.S. Census Data.

(ii) *Certification.* (A) Within 180 days after the filing deadline for long-form applications, the winning bidder must amend its long-form application and attach a certification from the tribal government stating the following:

(*1*) The tribal government authorizes the winning bidder to site facilities and provide service on its tribal land;

(*2*) The tribal area to be served by the winning bidder constitutes qualifying tribal land; and

(*3*) The tribal government has not and will not enter into an exclusive contract with the applicant precluding entry by other carriers, and will not unreasonably discriminate among wireless carriers seeking to provide service on the qualifying tribal land.

(B) In addition, within 180 days after the filing deadline for long-form applications, the winning bidder must amend its long-form application and file a certification that it will comply with

the construction requirements set forth in paragraph (f)(3)(vi) of this section and consult with the tribal government regarding the siting of facilities and deployment of service on the tribal land.

(C) If the winning bidder fails to submit the required certifications within the 180-day period, the bidding credit will not be awarded, and the winning bidder must pay the balance on the original gross bid amount.

* * * * *

(vi) *Post-construction certification.* Within fifteen (15) days of the third anniversary of the initial grant of its license, a recipient of a bidding credit under this section shall file a certification that the recipient has constructed and is operating a system capable of serving seventy-five (75) percent of the population of the qualifying tribal land for which the credit was awarded. The recipient must provide the total population of the tribal area covered by its license as well as the number of persons that it is serving in the tribal area.

(vii) *Performance penalties.* If a recipient of a bidding credit under this section fails to provide the post-construction certification required by paragraph (f)(3)(vi) of this section, then it shall repay the bidding credit amount in its entirety, plus interest. The interest will be based on the rate for ten-year U.S. Treasury obligations applicable on the date the license is granted. Such payment shall be made within thirty (30) days of the third anniversary of the initial grant of its license. Failure to repay the bidding credit amount and interest within the required time period will result in automatic termination of the license without specific Commission action.

(viii) *Partitioning and disaggregation.* Parties seeking approval for partitioning or disaggregation of tribal areas obtained pursuant to the tribal lands bidding credit shall request an authorization for partial assignment of a license pursuant to § 1.948.

(A) *Partitioning.* A licensee of a market obtained using a tribal lands bidding credit may partition the tribal lands within its market. The partitioned area must include all tribal areas within the market subject to the tribal lands bidding credit. The partitionee must certify that it will satisfy the construction requirements set forth in paragraph (f)(3)(vi) of this section.

(B) *Disaggregation.* Spectrum covering tribal lands may be disaggregated in any amount. The disaggregated spectrum must include all tribal areas within the market subject to the tribal lands bidding credit. The original licensee must certify that it will satisfy the construction requirements set forth in paragraph (f)(3)(vi) of this section, unless the parties to the transaction inform the Commission otherwise.

* * * * *

[FR Doc. 03–10736 Filed 5–1–03; 8:45 am]

BILLING CODE 6712–01–P

NATIONAL AERONAUTICS AND SPACE ADMINISTRATION

48 CFR Parts 1802, 1806, 1815, 1816, and 1843

RIN 2700–AC33

Definitions

AGENCY: National Aeronautics and Space Administration.

ACTION: Final rule.

SUMMARY: This final rule revises the NASA FAR Supplement (NFS) by amending the definitions of ''contracting activity'' and ''head of contracting activity'' consistent with realignment of program management responsibilities between NASA Headquarters and the field centers.

EFFECTIVE DATE: May 2, 2003.

FOR FURTHER INFORMATION CONTACT: Harold Nelson, NASA, Office of Procurement, Program Operations (Code HS); (202) 358–0436; e-mail: *harold.a.nelson@nasa.gov.*

SUPPLEMENTARY INFORMATION:

A. Background

On November 14, 2002, the Assistant Administrator for Procurement approved a deviation to NFS section 1802.101 to designate the Deputy Associate Administrator for the International Space Station (ISS) and Space Shuttle Programs in the Office of Space Flight as the head of the contracting activity (HCA) in lieu of the Center Director(s) for all contracts that directly support the ISS or Space Shuttle Program. This deviation was approved in support of the realignment of program management responsibilities between NASA Headquarters and the field centers. This final rule implements this deviation.

B. Regulatory Flexibility Act

This final rule does not constitute a significant revision within the meaning of FAR 1.501 and Public Law 98–577, and publication for public comment is not required. However, NASA will consider comments from small entities concerning the affected NFS Parts 1802, 1806, 1815, 1816, and 1843 in accordance with 5 U.S.C. 610.

C. Paperwork Reduction Act

The Paperwork Reduction Act does not apply because the changes do not impose recordkeeping or information collection requirements which require the approval of the Office of Management and Budget under 44 U.S.C. 3501, *et seq.*

List of Subjects in 48 CFR Parts 1802, 1806, 1815, 1816, and 1843

Government Procurement.

Tom Luedtke,

Assistant Administrator for Procurement.

■ Accordingly, 48 CFR Parts 1802, 1806, 1815, 1816, and 1843 are amended as follows:

■ 1. The authority citation for 48 CFR Parts 1802, 1806, 1815, 1816, and 1843 continues to read as follows:

Authority: 42 U.S.C. 2473(c)(1).

PART 1802—DEFINITIONS OF WORDS AND TERMS

■ 2. Amend section 1802.101 by revising the definitions of ''contracting activity'' and ''head of the contracting activity'' to read as follows:

1802.101 Definitions.

* * * * *

''Contracting activity'' in NASA includes the NASA Headquarters installation and the following field installations: Ames Research Center, Dryden Flight Research Center, Glenn Research Center at Lewis Field, Goddard Space Flight Center, Johnson Space Center, Kennedy Space Center, Langley Research Center, Marshall Space Flight Center and Stennis Space Center. A major program that may have contracts at multiple field centers may also be considered a ''contracting activity.''

* * * * *

''Head of the contracting activity'' (HCA) means, for field installations, the Director or other head and, for NASA Headquarters, the Director for Headquarters Operations. For International Space Station (ISS) and Space Shuttle Program contracts, the HCA is the Headquarters Deputy Associate Administrator for ISS and Shuttle Programs in lieu of the field Center Director(s).

* * * * *

PART 1806—COMPETITION REQUIREMENTS

■ 3. Amend section 1806.304–70 by revising paragraphs (b)(2) and (c)(1)(iii) to read as follows:

1806.304–70 Approval of NASA justifications.

* * * * *

(b) * * *

(2) Approving official: Head of contracting activity.

(c) * * *

(1) * * *

(iii) Head of contracting activity.

* * * * *

PART 1815—CONTRACTING BY NEGOTIATION

1815.370 [Amended]

■ 4. In section 1815.370, amend the last sentence of paragraph (h)(5) by deleting ''center director'' and adding ''head of contracting activity'' in its place.

PART 1816—TYPES OF CONTRACTS

1816.402–270 [Amended]

■ 5. In section 1816.402–270, amend the second sentence of paragraph (a) by deleting ''Center Director'' and adding ''head of contracting activity'' in its place.

PART 1843—CONTRACT MODIFICATIONS

1843.7003 [Amended]

■ 6. In section 1843.7003, amend paragraphs (a)(1) and (b)(2) by deleting ''Center Director'' and adding ''head of contracting activity'' in its place.

1843.7004 [Amended]

■ 7. In section 1843.7004, amend the introductory text of paragraph (a) by deleting ''Center Director'' and adding ''head of contracting activity'' in its place.

[FR Doc. 03–10806 Filed 5–1–03; 8:45 am]

BILLING CODE 7510–01–P

NATIONAL AERONAUTICS AND SPACE ADMINISTRATION

48 CFR Part 1845

Government Property—Instructions for Preparing NASA Form 1018

AGENCY: Office of Procurement, Contract Management Division, National Aeronautics and Space Administration (NASA).

ACTION: Final rule.

SUMMARY: This rule adopts as final, without change, the interim rule published in the **Federal Register** on November 12, 2002, which amended the NASA Federal Acquisition Regulation Supplement (NFS) to provide policies and procedures for proper reporting of heritage assets as part of contractor annual reports of NASA property in its custody, and to clarify other property classifications. NASA uses the data contained in contractor reports for annual financial statements and property management.This change will provide for consistent reporting of NASA property by contractors.

EFFECTIVE DATE: May 2, 2003.

FOR FURTHER INFORMATION: Lou Becker, NASA Headquarters, Office of Procurement, Contract Management Division (Code HK), Washington, DC 20546, telephone: (202) 358–4593, e-mail to: *lbecker@hq.nasa.gov.*

SUPPLEMENTARY INFORMATION:

A. Background

NASA must account for and report assets in accordance with 31 U.S.C. 3515, Federal Accounting Standards, and Office of Management and Budget (OMB) Bulletin No. 01–09, Form and Content of Agency Financial Statements. Since contractors maintain NASA's official records NASA-owned assets in contractors' possession, NASA must obtain annual data from those records to facilitate proper accounting and control over the assets. NASA published an interim rule in the **Federal Register** (67 FR 68533) on November 12, 2002, specifying policies and procedures for proper reporting of heritage assets by providing a definition and directing that these assets be reported within appropriate property classifications as part of contractor annual reports of NASA property in its custody. No public comments were received. The interim rule is converted to a final rule without change.

This is not a significant regulatory action, and therefore, was not subject to review under Section 6(b) of Executive Order 12866, Regulatory Planning and Review, dated September 30, 1993.

This final rule is not a major rule under 5 U.S.C.804.

B. Regulatory Flexibility Act

NASA certifies that this final rule will not have a significant economic impact on a substantial number of small businesses within the meaning of the Regulatory Flexibility Act (5 U.S.C. 601 *et seq.*) because it clarifies existing property reporting policies and procedures contractors must follow when accounting for reporting assets.

C. Paperwork Reduction Act

The Paperwork Reduction Act does not apply because the changes to the NFS do not impose new recordkeeping or information collection requirements, or collections of information from offerors, contractors, or members of the public which require the approval of the Office of Management and Budget under 44 U.S.C. 3501, *et seq.*

List of Subjects in 48 CFR Part 1845

Government procurement.

Charles W. Duff II,

Acting Assistant Administrator for Procurement.

Interim Rule Adopted as Final Without Change

■ Accordingly, NASA adopts the interim rule amending 48 CFR part 1845, which was published in the **Federal Register** on November 12, 2002 (67 FR 68533—68535), as a final rule without change.

[FR Doc. 03–10807 Filed 5–1–03; 8:45 am]

BILLING CODE 7510–01–P

Proposed Rules

Federal Register
Vol. 68, No. 85
Friday, May 2, 2003

This section of the FEDERAL REGISTER contains notices to the public of the proposed issuance of rules and regulations. The purpose of these notices is to give interested persons an opportunity to participate in the rule making prior to the adoption of the final rules.

DEPARTMENT OF AGRICULTURE

Animal and Plant Health Inspection Service

7 CFR Part 360

[Docket No. 02–067–2]

Noxious Weeds; Cultivars of Kikuyu Grass

AGENCY: Animal and Plant Health Inspection Service, USDA.

ACTION: Advance notice of proposed rulemaking; reopening of comment period.

SUMMARY: We are reopening the comment period for our advance notice of proposed rulemaking in which we solicited data regarding research or studies on cultivars of kikuyu grass, especially data concerning potential invasiveness in the United States of cultivars of kikuyu grass. This action will allow interested persons additional time to prepare and submit comments.

DATES: We will consider all comments that we receive regarding Docket No. 02–067–1 on or before May 16, 2003.

ADDRESSES: You may submit comments by postal mail/commercial delivery or electronically. If you use postal mail/commercial delivery, please send four copies of your comment (an original and three copies) to: Docket No. 02–067–1, Regulatory Analysis and Development, PPD, APHIS, Station 3C71, 4700 River Road Unit 118, Riverdale, MD 20737–1238. Please state that your comment refers to Docket No. 02–067–1. If you wish to submit electronic comments, please visit the Internet Web site *http://comments.aphis.usda.gov* and follow the instructions there.

You may read any comments that we receive on this docket in our reading room, or online at *http://comments.aphis.usda.gov*. Electronic comments will be posted to this Web site immediately after receipt, and postal mail/commercial delivery comments will be scanned and posted to the Web site within a few days after receipt. The reading room is located in room 1141 of the USDA South Building, 14th Street and Independence Avenue SW., Washington, DC. Normal reading room hours are 8 a.m. to 4:30 p.m., Monday through Friday, except holidays. To be sure someone is there to help you, please call (202) 690–2817 before coming.

APHIS documents published in the **Federal Register**, and related information, including the names of organizations and individuals who have commented on APHIS dockets, are available on the Internet at *http://www.aphis.usda.gov/ppd/rad/webrepor.html*.

FOR FURTHER INFORMATION CONTACT: Mr. Michael A. Lidsky, Esq., Assistant Director, Regulatory Coordination, PPQ, APHIS, 4700 River Road Unit 141, Riverdale, MD 20737–1236; (301) 734–5762.

SUPPLEMENTARY INFORMATION:

Background

On February 10, 2003, we published in the **Federal Register** (68 FR 6653–6655, Docket No. 02–067–1) an advance notice of proposed rulemaking in which we announced that we are considering whether we should remove Whittet and AZ–1, two cultivars of kikuyu grass, from the list of noxious weeds. In that document, we solicited data regarding research or studies on cultivars of kikuyu grass, especially data concerning potential invasiveness in the United States of cultivars of kikuyu grass, in order to help us make a scientifically sound decision.

Comments on the advance notice of proposed rulemaking were required to be received on or before April 11, 2003. We are reopening the comment period for Docket No. 02–067–1 for an additional 14 days from the date of this notice. This action will allow interested persons additional time to prepare and submit comments. We will also consider all comments received between April 12, 2003 (the day after the close of the original comment period) and the date of this notice.

Authority: 7 U.S.C. 7711–7714, 7718, 7731, 7751, and 7754; 7 CFR 2.22, 2.80, and 371.3.

Done in Washington, DC, this 29th day of April 2003.

Peter Fernandez,

Acting Administrator, Animal and Plant Health Inspection Service.

[FR Doc. 03–10875 Filed 5–1–03; 8:45 am]

BILLING CODE 3410–34–P

FARM CREDIT ADMINISTRATION

12 CFR Part 613

RIN 3052–AC20

Eligibility and Scope of Financing

AGENCY: Farm Credit Administration.

ACTION: Advance notice of proposed rulemaking.

SUMMARY: The Farm Credit Administration (FCA) is considering whether to revise its regulations governing eligibility and scope of financing for farmers, ranchers, and aquatic producers or harvesters who borrow from Farm Credit System (FCS or System) institutions that operate under titles I or II of the Farm Credit Act of 1971, as amended (Act). We are also considering whether we should modify our regulatory definition of ''moderately priced'' rural housing. We invite your comments.

DATES: You may send us comments by July 31, 2003.

ADDRESSES: You may send comments by electronic mail to ''*reg-comm@fca.gov*,'' through the Pending Regulations section of FCA's Web site, ''*www.fca.gov*,'' or through the government-wide ''*www.regulations.gov*'' portal. You may also send comments to Robert E. Donnelly, Acting Director, Regulation and Policy Division, Office of Policy and Analysis, Farm Credit Administration, 1501 Farm Credit Drive, McLean, Virginia 22102–5090 or by facsimile to (703) 734–5784. You may review copies of all comments we receive at our office in McLean, Virginia.

FOR FURTHER INFORMATION CONTACT:

Mark L. Johansen, Policy Analyst, Office of Policy and Analysis, Farm Credit Administration, McLean, VA 22102–5090, (703) 883–4498, TTY (703) 883–4434,

or

Richard Katz, Senior Attorney, Office of General Counsel, Farm Credit

Administration, McLean, VA 22102–5090, (703) 883–4020, TTY (703) 883–4020.

SUPPLEMENTARY INFORMATION:

I. Introduction

We received two petitions under 5 U.S.C. 553(e) to repeal § 613.3005, which limits the amount of credit that FCS institutions that operate under titles I or II of the Act can extend to eligible farmers, ranchers, and aquatic producers or harvesters (collectively referred to as ''farmers''). The petitioners state that the Act does not restrict the System's authority to finance all the credit needs of any group of eligible farmers and, therefore, § 613.3005 should be eliminated as having no basis in law. The petitioners also state that § 613.3005 unnecessarily restricts the System's ability to serve creditworthy and eligible farmers, particularly those who have significant off-farm income, and young, beginning, and small farmers.

One petitioner also asked us to change the definition of ''moderately priced'' rural housing in § 613.3030(a)(4). The petitioner stated that this definition has not kept pace with the evolving rural housing market and, therefore, is preventing FCS institutions that operate under titles I and II from fully serving the housing needs of eligible non-farm rural residents.

We have decided to start a rulemaking in response to these two petitions. We reserve judgment on the appropriate legal interpretation of the relevant provisions of the Act. Nevertheless, we believe it is appropriate to review our regulations governing eligibility and scope of financing for farmers and our definition of ''moderately priced'' rural housing. The goal of this rulemaking is to explore how our regulations can become more responsive to the needs of all eligible and creditworthy farmers and rural residents within the boundaries of the Act.

II. Background

A. Farmers

Section 1.9 of the Act authorizes FCS mortgage lenders to extend credit to ''*bona fide* farmers, ranchers, or producers or harvesters of aquatic products.'' Section 1.11(a)(1) of the Act states that ''Loans made by a Farm Credit [mortgage lender] to farmers, ranchers, and producers or harvesters of aquatic products may be for any agricultural or aquatic purpose and other credit needs of the applicant * * *.'' Similarly, section 2.4(a)(1) authorizes certain FCS associations to ''make, guarantee, or participate with other lenders in short- and intermediate-term loans and other similar financial assistance to * * * *bona fide* farmers and ranchers and the producers or harvesters of aquatic products, for agricultural or aquatic purposes and other requirements of such borrowers * * *.''

Under § 613.3000(a)(1), a ''*bona fide* farmer or rancher'' is ''a person owning agricultural land or engaged in the production of agricultural products * * *.'' The scope of financing regulation, § 613.3005, which the petitioners asked us to repeal, states:

> It is the objective of each bank and association, except for banks for cooperatives, to provide full credit, to the extent of creditworthiness, to the full-time *bona fide* farmer (one whose primary business and vocation is farming, ranching, or producing or harvesting aquatic products); and conservative credit to less than full-time farmers for agricultural enterprises, and more restricted credit for other credit requirements as needed to ensure a sound credit package or to accommodate a borrower's needs as long as the total credit results in being primarily an agricultural loan. However, the part-time farmer who needs to seek off-farm employment to supplement farm income or who desires to supplement off-farm income by living in a rural area and is carrying on a valid agricultural operation, shall have availability of credit for mortgages, other agricultural purposes, and family needs in the preferred position along with full-time farmers. Loans to farmers shall be on an increasingly conservative basis as the emphasis moves away from the full-time bona fide farmer to the point where agricultural needs only will be financed for the applicant whose business is essentially other than farming. Credit shall not be extended where investment in agricultural assets for speculative appreciation is a primary factor.

B. Non-Farm Rural Housing

Existing § 613.3030(a)(4) establishes two methods that FCS lenders may use to determine whether rural housing is ''moderately priced.'' The first method derives from section 8.0(1)(B) of the Act, which defines ''moderate priced'' for the purpose of secondary market financing as dwellings (excluding the land) that do not exceed $100,000, as adjusted for inflation. The second method authorizes FCS banks and associations to determine whether housing in a particular rural area is ''moderately priced'' by documenting data from a credible, independent, and recognized national or regional source. Housing values at or below the 75th percentile are deemed to be moderately priced.

III. Questions

This rulemaking gives you the opportunity to tell us whether and how we should change our eligibility and scope of financing regulations for eligible farmers. We want to know if you think we should change the eligibility criteria for farmers as defined in § 613.3000. In addition, we seek your input on whether we should repeal, retain, or amend the scope of financing requirements in § 613.3005. We are particularly interested in your views on how we should regulate FCS lending for farmers' other credit needs. Please respond to the following questions.

1. Current § 613.3000(a)(1) defines a *bona fide* farmer, rancher, or aquatic producer as a person who either owns agricultural land or is engaging in the production of agricultural products. Do you think the FCA should retain or change this definition? If you favor changing this definition, please offer specific recommendations.

2. What limits, if any, should FCA regulations place on lending for farmers' other credit needs?

3. How should we regulate access to the other credit needs of eligible farmers who derive most of their income from off-farm sources? Do you favor retaining the current regulatory distinction between full-time and part-time farmers? If not, what would be a better approach?

4. Should we change our definition of ''moderately priced'' rural housing in § 613.3030(a)(4)? If you favor changing the definition, please offer specific recommendations.

The FCA welcomes other ideas or suggestions you may have about our eligibility and scope of financing regulations for eligible farmers and our regulations defining ''moderately priced'' rural housing.

The FCA also plans to conduct a public meeting on eligibility and scope of financing for eligible farmers and our definition of ''moderately priced'' rural housing. We will publish a separate notice in the **Federal Register** that will provide interested parties more information about the public meeting.

Dated: April 29, 2003.

Jeanette C. Brinkley,

Secretary, Farm Credit Administration Board.

[FR Doc. 03–10898 Filed 5–1–03; 8:45 am]

BILLING CODE 6705–01–P

FARM CREDIT ADMINISTRATION

12 CFR Part 613

RIN 3052–AC20

Eligibility and Scope of Financing

AGENCY: Farm Credit Administration.

ACTION: Notice of public meeting.

SUMMARY: The Farm Credit Administration (FCA or agency) announces a public meeting to hear your views about whether and how we should revise our regulations governing eligibility and scope of financing for farmers, ranchers, and aquatic producers or harvesters who borrow from Farm Credit System institutions that operate under titles I or II of the Farm Credit Act of 1971, as amended (Act) and our definition of ''moderately priced'' rural housing.

DATES: The public meeting will be held on June 26, 2003, in McLean, Virginia, 22102–5090 (703) 883–4056.

ADDRESSES: The FCA will hold the public meeting at our headquarters location at 1501 Farm Credit Drive, McLean, Virginia at 9 a.m. eastern daylight savings time. You may submit requests to appear and present testimony for the public meeting by electronic mail to ''*reg-comm@fca.gov*,'' through the Pending Regulations section of FCA's Web site, ''*www.fca.gov*,'' or through the government-wide ''*www.regulations.gov*'' portal. You may also submit requests to Robert E. Donnelly, Acting Director, Regulation and Policy Division, Office of Policy and Analysis, Farm Credit Administration, 1501 Farm Credit Drive, McLean, Virginia 22102–5090 or by facsimile to (703) 734–5784.

FOR FURTHER INFORMATION CONTACT:

Mark L. Johansen, Policy Analyst, Office of Policy and Analysis, Farm Credit Administration, McLean, VA 22102–5090, (703) 883–4498, TTY (703) 883–4434,

or

Richard Katz, Senior Attorney, Office of General Counsel, Farm Credit Administration, McLean, VA 22102–5090, (703) 883–4020, TTY (703) 883–4020.

SUPPLEMENTARY INFORMATION:

I. Background

We started this rulemaking in response to two petitions that asked us to repeal the scope of financing regulations in § 613.3005. One petitioner also asked us to modify our definition of ''moderately priced'' rural housing in § 613.3030(a)(4). The goal of this rulemaking is to explore how our regulations can become more responsive to the needs of all eligible ranchers, and aquatic producers or harvesters (collectively referred to as ''farmers'') and non-farm rural residents within the boundaries of the Act. We are publishing an Advance Notice of Proposed Rulemaking (ANPRM) in this issue of the **Federal Register**. In this document, we are announcing that we will hold a public meeting so you have another forum to present your views to us.

II. Topics

At the hearing, we will ask that you answer the same questions we asked in the ANPRM:

1. Current § 613.3000(a)(1) defines a *bona fide* farmer, rancher, or aquatic producer as a person who either owns agricultural land, or is engaging in the production of agricultural products. Do you think the FCA should retain or change this definition? If you favor changing this definition, please offer specific recommendations.

2. What limits, if any, should FCA regulations place on lending for farmers' other credit needs?

3. How should we regulate access to the other credit needs of eligible farmers who derive most of their income from off-farm sources? Do you favor retaining the current regulatory distinction between full-time and part-time farmers? If not, what would be a better approach?

4. Should we change our definition of ''moderately priced'' rural housing in § 613.3030(a)(4)? If you favor changing the definition, please offer specific recommendations.

III. Request To Present Testimony

Anyone wishing to present testimony in person may notify us by June 21, 2003, or register to speak on the day of the meeting. A request to speak should provide the name, address, and telephone number of the person wishing to testify and the general nature of the testimony. Requests to provide testimony in person will be honored in order of receipt.

Parties who register to speak on the day of the meeting may be invited to provide their testimony if time permits. If more people wish to testify than time permits, we will accept written statements for the record for 30 calendar days following the date of the public meeting.

Please limit oral testimony at the meeting to 10 minutes per person and allow 5 minutes for follow-up questions. At the public meeting, we will also accept, for the record, written comments on questions and issues raised in the ANPRM or any other comments that attendees may have on the subject of eligibility and scope of financing for farmers, ranchers, and aquatic producers and harvesters and the definition of ''moderately priced'' rural housing.

You may also wish to submit written statements or detailed summaries of the text of your testimony. Written comments that you wish to submit to supplement your testimony should be presented to us by the close of the public meeting.

Written copies of the testimony, along with a recorded transcript of the proceedings, will be included in our official public record. A transcript of the public meeting and any written statements submitted to the agency will be available for public inspection at our office in McLean, Virginia.

IV. Special Accommodations

The meeting is accessible to people with disabilities. Requests for sign language interpretation or other auxiliary aids should be received by FCA's Office of Communications and Public Affairs at (703) 883–4056, (TTY (703) 883–4056) by June 21, 2003.

Dated: April 29, 2003.

Jeanette C. Brinkley,

Secretary, Farm Credit Administration Board.

[FR Doc. 03–10899 Filed 5–1–03; 8:45 am]

BILLING CODE 6705–01–P

DEPARTMENT OF TRANSPORTATION

Federal Aviation Administration

14 CFR Part 39

[Docket No. 2003–CE–14–AD]

RIN 2120–AA64

Airworthiness Directives; EXTRA Flugzeugbau GmbH Models EA–300/200, EA–300L, and EA–300S Airplanes

AGENCY: Federal Aviation Administration, DOT.

ACTION: Notice of proposed rulemaking (NPRM).

SUMMARY: This document proposes to adopt a new airworthiness directive (AD) that would apply to all EXTRA Flugzeugbau GmbH (EXTRA) Models EA–300/200, EA–300L, and EA–300S airplanes. This proposed AD would require you to inspect the fuel selector valve for leakage and the wing for structural damage and correct any damage or leakage. This proposed AD is the result of mandatory continuing airworthiness information (MCAI) issued by the airworthiness authority for Germany. The actions specified by this proposed AD are intended to detect and correct fuel leakage in the wings, which could lead to structural damage of the wings and possible reduced structural margins. Reduced structural margins could lead to eventual structural failure.

DATES: The Federal Aviation Administration (FAA) must receive any

comments on this proposed rule on or before June 9, 2003.

ADDRESSES: Submit comments to FAA, Central Region, Office of the Regional Counsel, Attention: Rules Docket No. 2003–CE–14–AD, 901 Locust, Room 506, Kansas City, Missouri 64106. You may view any comments at this location between 8 a.m. and 4 p.m., Monday through Friday, except Federal holidays. You may also send comments electronically to the following address: *9–ACE–7–Docket@faa.gov*. Comments sent electronically must contain ''Docket No. 2003–CE–14–AD'' in the subject line. If you send comments electronically as attached electronic files, the files must be formatted in Microsoft Word 97 for Windows or ASCII text.

You may get service information that applies to this proposed AD from EXTRA Flugzeugbau GmbH, Flugplatz Dinslaken, D–46569 Hünxe, Federal Republic of Germany; telephone: (0 28 58) 91 37–00; facsimile: (0 28 58) 91 37–30. You may also view this information at the Rules Docket at the address above.

FOR FURTHER INFORMATION CONTACT: Karl Schletzbaum, Aerospace Engineer, FAA, Small Airplane Directorate, 901 Locust, Room 301, Kansas City, Missouri 64106; telephone: (816) 329–4146; facsimile: (816) 329–4090.

SUPPLEMENTARY INFORMATION:

Comments Invited

How do I comment on this proposed AD? The FAA invites comments on this proposed rule. You may submit whatever written data, views, or arguments you choose. You need to include the proposed rule's docket number and submit your comments to the address specified under the caption **ADDRESSES.** We will consider all comments received on or before the closing date. We may amend this proposed rule in light of comments received. Factual information that supports your ideas and suggestions is extremely helpful in evaluating the effectiveness of this proposed AD action and determining whether we need to take additional rulemaking action.

Are there any specific portions of this proposed AD I should pay attention to? The FAA specifically invites comments on the overall regulatory, economic, environmental, and energy aspects of this proposed rule that might suggest a need to modify the rule. You may view all comments we receive before and after the closing date of the rule in the Rules Docket. We will file a report in the Rules Docket that summarizes each contact we have with the public that concerns the substantive parts of this proposed AD.

How can I be sure FAA receives my comment? If you want FAA to acknowledge the receipt of your mailed comments, you must include a self-addressed, stamped postcard. On the postcard, write ''Comments to Docket No. 2003–CE–14–AD.'' We will date stamp and mail the postcard back to you.

Discussion

What events have caused this proposed AD? The Luftfahrt-Bundesamt (LBA), which is the airworthiness authority for Germany, recently notified FAA that an unsafe condition may exist on all EXTRA Models EA–300/200, EA–300L, and EA–300S airplanes. The LBA reports several occurrences where the fuel selector valve did not operate correctly. When the wing tanks are selected, the acro/center tank is not completely shut-off. The result is fuel draining into the wing tanks that must be empty for acrobatics. This failure of the fuel selector valve to correctly operate is caused by the deterioration of the ''O''-rings in the valve.

What are the consequences if the condition is not corrected? Acrobatic operation with fuel in the wings could lead to structural damage of the wings and possibly reduced structural margins. Reduced structural margins could lead to eventual structural failure.

Is there service information that applies to this subject? EXTRA has issued Service Letter No. 300–09–02, Issue: A, dated September 19, 2002, which includes procedures for inspecting the fuel selector valve for leakage.

What action did the LBA take? The LBA classified this service bulletin as mandatory and issued German AD Number AD 2002–48, dated January 9, 2003, in order to ensure the continued airworthiness of these airplanes in Germany.

Was this in accordance with the bilateral airworthiness agreement? These airplane models are manufactured in Germany and are type certificated for operation in the United States under the provisions of § 21.29 of the Federal Aviation Regulations (14 CFR 21.29) and the applicable bilateral airworthiness agreement.

Pursuant to this bilateral airworthiness agreement, the LBA has kept FAA informed of the situation described above.

The FAA's Determination and an Explanation of the Provisions of this Proposed AD

What has FAA decided? The FAA has examined the findings of the LBA; reviewed all available information, including the service information referenced above; and determined that:

—The unsafe condition referenced in this document exists or could develop on other Models EA–300/200, EA–300L, and EA–300S airplanes of the same type design that are on the U.S. registry;

—The actions specified in the previously-referenced service information should be accomplished on the affected airplanes; and

—AD action should be taken in order to correct this unsafe condition.

What would this proposed AD require? This proposed AD would require you to inspect the fuel selector valve for leakage and the wing for structural damage and correct any damage or leakage.

How does the revision to 14 CFR part 39 affect this proposed AD? On July 10, 2002, FAA published a new version of 14 CFR part 39 (67 FR 47997, July 22, 2002), which governs FAA's AD system. This regulation now includes material that relates to special flight permits, alternative methods of compliance, and altered products. This material previously was included in each individual AD. Since this material is included in 14 CFR part 39, we will not include it in future AD actions.

Cost Impact

How many airplanes would this proposed AD impact? We estimate that this proposed AD affects 184 airplanes in the U.S. registry.

What would be the cost impact of this proposed AD on owners/operators of the affected airplanes? We estimate the following costs to accomplish this proposed inspection of the fuel selector valve:

Labor cost	Parts cost	Total cost per airplane	Total cost on U.S. operators
4 workhours × $60 per hour = $240	Not applicable	$240	$240 × 184 = $44,160.

We estimate the following costs to accomplish any necessary valve repair that would be required based on the results of this proposed inspection. We have no way of determining the number of airplanes that may need such repair:

Labor cost	Parts cost	Total cost per airplane
5 workhours × $60 per hour = $300	$122.50	$422.50.

We estimate the following costs to accomplish the proposed external inspection of the wings:

Labor cost	Parts cost	Total cost per airplane	Total cost on U.S. operators
1 workhour × $60 per hour = $60	Not Applicable	$60	$60 × 184 = $11,040.

We are unable to estimate the costs to accomplish any necessary wing repair that would be required based on the results of this proposed inspection. EXTRA will evaluate the damage of each affected airplane and develop an appropriate repair scheme.

Regulatory Impact

Would this proposed AD impact various entities? The regulations proposed herein would not have a substantial direct effect on the States, on the relationship between the national government and the States, or on the distribution of power and responsibilities among the various levels of government. Therefore, it is determined that this proposed rule would not have federalism implications under Executive Order 13132.

Would this proposed AD involve a significant rule or regulatory action? For the reasons discussed above, I certify that this proposed action (1) is not a ''significant regulatory action'' under Executive Order 12866; (2) is not a ''significant rule'' under DOT Regulatory Policies and Procedures (44 FR 11034, February 26, 1979); and (3) if promulgated, will not have a significant economic impact, positive or negative, on a substantial number of small entities under the criteria of the Regulatory Flexibility Act. A copy of the draft regulatory evaluation prepared for this action has been placed in the Rules Docket. A copy of it may be obtained by contacting the Rules Docket at the location provided under the caption **ADDRESSES**.

List of Subjects in 14 CFR Part 39

Air transportation, Aircraft, Aviation safety, Safety.

The Proposed Amendment

Accordingly, under the authority delegated to me by the Administrator, the Federal Aviation Administration proposes to amend part 39 of the Federal Aviation Regulations (14 CFR part 39) as follows:

PART 39—AIRWORTHINESS DIRECTIVES

1. The authority citation for part 39 continues to read as follows:

Authority: 49 U.S.C. 106(g), 40113, 44701.

§ 39.13 [Amended]

2. FAA amends § 39.13 by adding a new airworthiness directive (AD) to read as follows:

EXTRA FLUGZEUGBAU GMBH: Docket No. 2003–CE–14–AD

(a) *What airplanes are affected by this AD?* This AD affects all Models EA–300/200, EA–300L, and EA–300S airplanes, all serial numbers, that are certificated in any category.

(b) *Who must comply with this AD?* Anyone who wishes to operate any of the airplanes identified in paragraph (a) of this AD must comply with this AD.

(c) *What problem does this AD address?* The actions specified by this AD are intended to detect and correct fuel leakage in the wings, which could lead to structural damage of the wings and possible reduced structural margins. Reduced structural margins could lead to eventual structural failure.

(d) *What actions must I accomplish to address this problem?* To address this problem, you must accomplish the following:

Actions	Compliance	Procedures
(1) For all affected airplanes, inspect the fuel selector valve for leakage. Do not use compressed gas to check the valve since it is possible that use of compressed gas will damage or dislodge the valve ''O''-rings. Refer to the caution on page 1 of the service letter.	Within the next 100 hours time-in-service (TIS) after the effective date of this AD, unless already accomplished.	In accordance with EXTRA Flugzeugbau GmbH Service Letter No. 300–09–02, Issue: A, dated September 19, 2002, and the applicable airplane maintenance manual.
(2) For all affected airplanes, if any leakage is found during the inspection required by this AD, repair the damage.	Prior to further flight after the inspection required in paragraph (d)(1) of this AD, unless already accomplished.	In accordance with the applicable airplane maintenance manual.
(3) For all affected airplanes, inspect the external wing for structural damage:.	Within the next 100 hours time-in-service (TIS) after the effective date of this AD, unless already accomplished.	In accordance with the applicable airplane maintenance manual.
(i) Cracks.		
(ii) Delamination.		
(iii) Fuel leakage.		

Actions	Compliance	Procedures
(4) For all affected airplanes, if any cracks, delamination, or fuel leakage is found during the inspection required by this AD, accomplish the following: (i) obtain a repair scheme from the manufacturer; (ii) incorporate this repair scheme; and (iii) accomplish any follow-up actions as directed by the FAA.	Prior to further flight after the inspection required in paragraph (d)(3) of this AD, unless already accomplished.	In accordancae with a repair scheme obtained from EXTRA Flugzeugbau GmbH, Flugplatz Dinslaken, D–46569 Hünxe, Federal Republic of Germany; telephone: (0 28 58) 91 37–00; facsimile: (0 28 58) 91 37–30. Obtain this repair scheme through the FAA at the address specified in paragraph (e) of this AD.

(e) *Can I comply with this AD in any other way?* To use an alternative method of compliance or adjust the compliance time, follow the procedures in 14 CFR 39.19. Send these requests to the Manager, Standards Office, Small Airplane Directorate. For information on any already approved alternative methods of compliance, contact Karl Schletzbaum, Aerospace Engineer, FAA, Small Airplane Directorate, 901 Locust, Room 301, Kansas City, Missouri 64106; telephone: (816) 329–4146; facsimile: (816) 329–4090.

(f) *How do I get copies of the documents referenced in this AD?* You may get copies of the documents referenced in this AD from EXTRA Flugzeugbau GmbH, Flugplatz Dinslaken, D–46569 Hünxe, Federal Republic of Germany; telephone: (0 28 58) 91 37–00; facsimile: (0 28 58) 91 37–30. You may view these documents at FAA, Central Region, Office of the Regional Counsel, 901 Locust, Room 506, Kansas City, Missouri 64106.

Note: The subject of this AD is addressed in German AD 2002–48, dated January 9, 2003.

Issued in Kansas City, Missouri, on April 25, 2003.

James E. Jackson,

Acting Manager, Small Airplane Directorate, Aircraft Certification Service.

[FR Doc. 03–10846 Filed 5–1–03; 8:45 am]

BILLING CODE 4910–13–P

NATIONAL ARCHIVES AND RECORDS ADMINISTRATION

36 CFR Part 1280

RIN 3095–AB17

NARA Facilities; Public Use; Correction

AGENCY: National Archives and Records Administration (NARA).

ACTION: Proposed rule; correction.

SUMMARY: This document corrects the preamble to a proposed rule published in the **Federal Register** of April 18, 2003, regarding public use of NARA facilities. This document corrects a fax number in the **ADDRESSES** section.

DATES: Comments are due by June 17, 2003.

FOR FURTHER INFORMATION CONTACT: Kim Richardson at telephone number 301–837–2902 or fax number 301–837–0319.

ADDRESSES: In the proposed rule FR Doc. 03–9585, beginning on page 19168 in the issue of April 18, 2003, make the following correction, in the **ADDRESSES** section. On page 19168 in the third column, in the **ADDRESSES** section, second sentence, change the fax number to 301–837–0319.

Dated: April 28, 2003.

Nancy Allard,

Federal Register Liaison Officer.

[FR Doc. 03–10808 Filed 5–1–03; 8:45 am]

BILLING CODE 7515–01–P

ENVIRONMENTAL PROTECTION AGENCY

40 CFR Part 52

[PA183–4203b; FRL–7480–3]

Approval and Promulgation of Air Quality Implementation Plans; Pennsylvania; VOC and NO_X RACT Determinations for Three Individual Sources

AGENCY: Environmental Protection Agency (EPA).

ACTION: Proposed rule.

SUMMARY: EPA proposes to approve the State Implementation Plan (SIP) revisions submitted by the Commonwealth of Pennsylvania to establish and require reasonably available control technology (RACT) for three major sources of volatile organic compounds (VOC) and nitrogen oxides (NO_X) located in Pennsylvania. The three major sources are: Bethlehem Structural Products Corporation in Northampton County; International Paper Company in Erie County; and National Fuel Gas Supply in Jefferson County. In the Final Rules section of this **Federal Register**, EPA is approving Pennsylvania's SIP submittal as a direct final rule without prior proposal because the Agency views this as a noncontroversial submittal and anticipates no adverse comments. A detailed rationale for the approval is set forth in the direct final rule. If no adverse comments are received in response to this action, no further activity is contemplated. If EPA receives adverse comments, the direct final rule will be withdrawn and all public comments received will be addressed in a subsequent final rule based on this proposed rule. EPA will not institute a second comment period. Any parties interested in commenting on this action should do so at this time.

DATES: Comments must be received in writing by June 2, 2003.

ADDRESSES: Written comments should be addressed to Makeba Morris, Acting Branch Chief, Air Quality Planning & Information Services Branch, Air Protection Division, Mailcode 3AP21, U.S. Environmental Protection Agency, Region III, 1650 Arch Street, Philadelphia, Pennsylvania 19103. Copies of the documents relevant to this action are available for public inspection during normal business hours at the Air Protection Division, U.S. Environmental Protection Agency, Region III, 1650 Arch Street, Philadelphia, Pennsylvania 19103; and the Pennsylvania Department of Environmental Resources, Bureau of Air Quality Control, PO Box 8468, 400 Market Street, Harrisburg, Pennsylvania 17105.

FOR FURTHER INFORMATION CONTACT: Betty Harris at (215) 814–2168 or Rose Quinto at (215) 814–2182 or via e-mail at *harris.betty@epa.gov* or *quinto.rose@epa.gov*.

SUPPLEMENTARY INFORMATION: For further information, please see the information provided in the direct final action, Pennsylvania's Approval of VOC and NO_X RACT Determinations for

Three Individual Sources, that is located in the ''Rules and Regulations'' section of this **Federal Register** publication. Please note that if EPA receives adverse comment on an amendment, paragraph, or section of this rule and if that provision may be severed from the remainder of the rule, EPA may adopt as final those provisions of the rule that are not the subject of an adverse comment.

Dated: March 31, 2003.

Thomas C. Voltaggio,

Acting Regional Administrator, Region III.

[FR Doc. 03–10659 Filed 5–1–03; 8:45 am]

BILLING CODE 6560–50–P

FEDERAL COMMUNICATIONS COMMISSION

47 CFR Part 1

[WT Docket No. 99–266; FCC 03–51]

Practice and Procedure

AGENCY: Federal Communications Commission.

ACTION: Notice of proposed rulemaking.

SUMMARY: In this document, the Commission seeks comment regarding ways to adjust its current tribal lands bidding credit program in order to encourage further deployment by carriers of wireless services on tribal lands. The Commission also seeks comment on possible adjustments to the program based on use of data from the 2000 Census that was not available when the program was initiated. Further, the Commission requests comment on a limited expansion of the credit program that would allow carriers who obtain bidding credits to serve qualifying tribal lands to obtain additional credit for extending their coverage to immediately adjacent non-tribal areas that also have low penetration rates.

DATES: Submit comments on or before June 2, 2003. Submit reply comments on or before June 16, 2003.

FOR FURTHER INFORMATION CONTACT: Roger Noel or Linda Chang, Wireless Telecommunications Bureau, at (202) 418–0620.

SUPPLEMENTARY INFORMATION: This is a summary of the Federal Communications Commission's *Second Further Notice of Proposed Rulemaking (2nd FNPRM)*, FCC 03–51, adopted March 7, 2003, and released March 14, 2003. The full text of the *2nd FNPRM* is available for public inspection during regular business hours at the FCC Reference Information Center, 445 12th St., SW., Room CY–A257, Washington, DC 20554. The complete text may be purchased from the Commission's duplicating contractor: Qualex International, 445 12th Street, SW., Room CY–B402, Washington, DC 20554, telephone 202–863–2893, facsimile 202–863–2898, or via e-mail at *qualexint@aol.com.*

Synopsis of Second Further Notice of Proposed Rulemaking

I. Background

1. In June 2000, the Commission adopted bidding credits for use by winning bidders who pledge to deploy facilities and provide service to federally recognized tribal areas that have a telephone service penetration rate at or below 70 percent. In setting out the bidding credit, the Commission noted that communities on tribal lands have had less access to telecommunications services than any other segment of the U.S. population. *See* Extending Wireless Telecommunications Services to Tribal Lands, WT Docket No. 99–266, *Report and Order,* 65 FR 47349 (August 2, 2000) (*R&O*), and *Further Notice of Proposed Rulemaking*, 65 FR 47366 (August 2, 2000) (*FNPRM*).

2. The *R&O* provided that, in order to obtain a bidding credit in a particular market, a winning bidder must indicate on its long-form application (FCC Form 601) that it intends to serve tribal lands in that market. Following the long-form application filing deadline, the applicant has 90 calendar days to amend its application to identify the tribal lands to be served, and provide certification from the tribal government(s) that: (1) It will allow the bidder to site facilities and provide service on its tribal land(s), in accordance with the Commission's rules; (2) it has not and will not enter into an exclusive contract with the applicant precluding entry by other carriers, and will not unreasonably discriminate against any carrier; and (3) its tribal land is a qualifying tribal land as defined in the Commission's rules, *i.e.,* an area that has a telephone penetration rate at or below 70 percent. In addition, at the conclusion of the 90-day period, the applicant must amend its long-form application to file a certification that it will comply with the bidding credit build-out requirement, and that it will consult with the tribal government regarding the siting of facilities and deployment of service on the tribal land. Upon receipt by the Commission of the certifications, the bidding credit is awarded and the applicant makes payment of the final net adjusted bid amount. If the required certifications are not provided at the conclusion of the 90-day period, the bidding credit is not awarded and the applicant is required to pay the balance on the original gross bid amount in order to be awarded the licenses.

3. In order to ensure that applicants awarded bidding credits actually deploy facilities and provide service to tribal lands, the Commission imposed performance requirements as a condition of obtaining the bidding credit. The Commission required that a licensee construct and operate its system to cover 75 percent of the population of the qualifying tribal land within three years of the grant of the license. While this 75 percent benchmark is higher than the construction benchmarks applicable to auctioned wireless licenses generally, the Commission determined that it would ensure that only carriers that are committed to serving tribal lands will receive bidding credits, and that wireless telecommunications services will be deployed rapidly to underserved tribal areas. In the *R&O,* the Commission required that, at the conclusion of the three-year period, licensees file a notification of construction indicating that they have met the 75 percent construction requirement on the tribal lands for which the credit was awarded. If the licensee fails to comply with any condition, it is required to repay the bidding credit plus interest thirty days after the conclusion of the construction period. In the event the licensee fails to repay the amount, the license automatically cancels.

4. In limiting the scope of the bidding credit to federally recognized tribal areas with telephone penetration rates equal to or less than 70 percent, the Commission concluded that the credits would target the tribal communities with the greatest need for access to telecommunications service. Although the Commission acknowledged that there are some non-tribal areas with penetration rates lower than the national average, it was determined that almost all non-tribal areas have penetration rates greater than 70 percent and that non-tribal areas have penetration rates significantly greater than most tribal areas. Accordingly, the Commission found it appropriate to limit the program to tribal lands with a 70 percent or less penetration rate. The Commission did not, however, foreclose the possibility of changing the scope of the bidding credit program.

II. Discussion

5. In this *2nd FNPRM*, the Commission solicits comment on whether it is necessary to modify the Commission's existing tribal lands bidding credit program in order to further facilitate the use of the bidding credit. The tribal lands bidding credit program is still in its early stages and few carriers have taken advantage of the bidding credit thus far. The record, however, is unclear regarding the reasons behind the lack of response to the bidding credit. Because the record in this proceeding thus far is not sufficient to make reasoned decisions as to what steps, if any, the Commission should take to further encourage carriers to provide coverage to tribal lands, the Commission seeks additional comment regarding this issue.

A. Modifying the Construction Requirements of the Tribal Lands Bidding Credit

6. The Commission's rules currently impose more stringent construction requirements on carriers who seek the tribal lands bidding credit than those who do not. All carriers taking advantage of the bidding credit are required to serve 75 percent of the population of the qualifying tribal land for which the credit was awarded, and must do so within three years of license grant. The Commission initially set out the more stringent performance requirement because it believed that the accelerated buildout requirement ensures that: (1) Only entities making a serious commitment to serving tribal lands will receive bidding credits; and (2) telecommunications services will be rapidly deployed to unserved tribal areas.

7. It is possible, however, that one reason behind the lack of participation in the tribal lands bidding credit program is that carriers find that difficulties involved in meeting the enhanced construction requirements are not sufficiently mitigated by the existing bidding credit. For example, there may be conditions, such as technical obstacles, economic factors, or other difficulties, that may make it difficult for carriers to satisfy the stricter construction requirement. Circumstances may exist on remote tribal lands such as low population density, rough terrain, and other factors that can negatively affect the ability of carriers to provide the requisite coverage to facilities in those areas. Accordingly, the Commission seeks comment as to whether it should reconsider the buildout obligations imposed on carriers utilizing the tribal lands bidding credit. Given that the public has now had a period of time to evaluate the bidding credit program, the Commission seeks comment on whether the requirement that carriers cover 75 percent of the population within three years remains feasible, or whether it should moderate the buildout criteria. Specifically, the Commission requests comment on what factors or circumstances exist that warrant an across-the-board relaxation of the bidding credit construction requirements.

8. In the event that the Commission determines that the construction requirements should be eased, it seeks comment on how the requirements should be modified. For example, should the population of the qualifying tribal land covered by a carrier be lessened (*i.e.* reduced to a number below 75 percent)? Alternatively, should the time period in which to provide coverage to 75 percent of the tribal population be extended to a construction period longer than three years? Or is the appropriate remedy a combination of a reduced population coverage requirement and an expanded construction period? Should the Commission adopt a variation of the combination method, such as a tiered approach in which construction would occur in phases, *e.g.,* a certain percentage of the total tribal population must be covered in three years, and a greater percentage would be covered at the five-year mark. The Commission seeks comment regarding these alternatives, as well as any other options. The Commission notes that any across-the-board revision of the construction requirements must balance its desire to implement achievable construction requirements with the underlying purpose of the requirements, that is, to ensure that service is actually deployed on tribal lands.

9. The Commission is also aware that a comprehensive change of the construction requirements may not be the appropriate solution. It may be that satisfying the tribal lands buildout requirement may be more difficult in certain tribal areas in the country than in others. There may be difficulties or conditions specific to certain tribal lands, that may make it difficult for carriers to satisfy the stricter construction requirement, while other carriers deploying the same type of service may have no difficulties in meeting the construction requirements in other tribal areas. Similarly, the ability to comply with the tribal lands bidding credit may depend on the particular wireless service at issue. The Commission's rules governing general construction and operation obligations of licensees reflect several approaches that match a type of license (*i.e.* site-based versus geographic market) or service (*e.g.* PCS or lower band 700 MHz) with a specific buildout requirement. It may therefore be preferable to deal with these situations on a case-by-case or service-by-service basis rather than an across-the-board method. The Commission therefore seeks comment on whether it should resolve any buildout difficulties using an ad hoc or waiver approach.

B. Increasing the Bidding Credit Limit

10. The Commission established the tribal lands bidding credit in order to encourage participation in auctions by carriers who are in a position to provide service to tribal lands, and to help mitigate the economic risks associated with the deployment of such service. In recognition of the underlying economic difficulties in providing service to high cost areas, the Commission sought to fashion a bidding credit that bore a correlation to the infrastructure investment necessary to deploy facilities on tribal lands.

11. As noted, it is not clear why few applicants have thus far taken advantage of the tribal lands bidding credit. In addition to the required construction requirements, another possibility for the poor response may be that the existing bidding credit may not provide carriers sufficient incentive to deploy facilities on tribal lands. Although no applicant has yet requested a larger credit than the one called for under the Commission's tribal lands bidding credit methodology, it may be that the current bidding credit amounts are not adequate to allow carriers to recoup a significant portion of infrastructure costs. Accordingly, the Commission seeks comment on whether the existing tribal lands bidding credit remains effective in encouraging carriers to provide service in tribal areas. The Commission also requests comment on whether and how the bidding credit amount and methodology should be modified to provide a greater incentive for carriers to deploy facilities on tribal lands.

C. Adjustment of the Bidding Credit Based on 2000 Census Data

12. The Commission initiated this proceeding in recognition of the unusually low telephone service penetration rates on tribal lands as identified by the 1990 Census. *See* Extending Wireless Telecommunications Services to Tribal Lands, WT Docket No. 99–266, *Notice of Proposed Rulemaking,* 64 FR 49128 (Sept. 10, 1999) (*NPRM*). In the *NPRM*,

the Commission cited 1990 Census data indicating that, although the nationwide average penetration rate for those with incomes below $5,000 living in rural areas was 78.7 percent, the telephone penetration rates for individuals on tribal lands at the same income level averaged 46.6 percent. Further, the 1990 Census found that only 53 percent of those living on tribal lands had basic telephone service, as opposed to 94 percent for the country as a whole.

13. Recently, the Census Bureau has begun to issue data from the 2000 Census indicating that average telephone penetration rates on tribal lands have increased appreciably from the levels reported in 1990. The average telephone penetration rate for all tribal areas reported by the 2000 Census is 83.1 percent. U.S. Bureau of the Census, ''Occupancy, Equipment, and Utilization Characteristics of Occupied Housing Units: 2000,'' Table GCT–H8. However, despite the improvement that this census data indicates in access to basic telephone service experienced in some tribal areas, the data also reveals that telephone penetration rates on virtually all tribal lands remain well below the 97.6 percent penetration rate now found in the country as a whole. Indeed, certain tribal lands continue to have unusually low telephone penetration levels despite gains in subscribership numbers since the 1990 Census. For example, although the penetration rates of tribal areas such as the Navajo Reservation, Fort Apache Reservation, and Mississippi Choctaw Reservation and Trust Lands each increased by over 20 percent since the 1990 Census, these tribal lands continue to have very low penetration rates (39.9 percent, 57.2 percent, and 62.6 percent, respectively). The Commission therefore believes that it is appropriate to continue to develop and apply policies aimed at promoting further deployment of wireless services to tribal lands. In this regard, the Commission seeks comment on whether and to what extent it should use the updated information now available regarding tribal penetration rates to modify certain aspects of the bidding credit. First, should the credit formula be adjusted to require the use of 2000 Census figures instead of 1990 Census figures in calculating tribal penetration for purposes of determining eligibility for the credit? Second, to the extent that the 2000 census indicates that penetration rates in some tribal areas have risen above 70 percent but remain below the national average, should the Commission modify the bidding credit formula so that tribal areas with penetration rates greater than 70 percent but some percentage below the national average are eligible for the credit? If the Commission concludes that it is desirable to raise the level at which tribal areas are eligible for a credit, what should the benchmark be? Further, with respect to tribal lands that have been identified by the 2000 Census as continuing to have unusually low penetration rates, the Commission requests comment on whether it should make adjustments to the bidding credit to create additional and more targeted incentives for wireless carriers to provide services in such areas.

D. Extending the Tribal Lands Bidding Credit to Adjacent Non-Tribal Areas With Low Penetration Rates

14. The Commission also solicits comment on whether it should extend bidding credits to non-tribal areas with penetration rates that fall below the percentage threshold used to calculate eligibility for the tribal credit. Specifically, the Commission seeks comment on whether it should allow a limited expansion of the tribal lands bidding credit program that would allow carriers who obtain bidding credits in order to serve qualifying tribal lands to seek additional credit for extending their coverage to immediately adjacent non-tribal areas that have comparably low penetration rates.

15. In the *R&O*, the Commission limited the bidding credit program to qualifying tribal areas with penetration rates of 70 percent or less because the Commission determined that this limitation would target the tribal communities with the greatest need for access to telecommunications services. The Commission concluded that it would be appropriate to limit application of the bidding credit to tribal lands because the Commission believed that, even though there are non-tribal areas with penetration rates below the national average of 94 percent (as reported in the 1990 Census), almost all non-tribal areas have telephone penetration rates higher than 70 percent. In reviewing this proceeding, however, the Commission recognizes that there may be certain areas abutting tribal lands that also lack adequate access to telecommunications services. It is likely that some non-tribal areas share with their neighboring tribal communities the same barriers to access, such as geographic remoteness, sparse population clusters, and low income levels. Further, it is likely that areas adjacent to tribal communities also have significant Native American populations.

16. Extending the bidding credit to underserved non-tribal areas could serve dual purposes. First, extending the credit furthers the objectives of the Communications Act which directs the Commission to ensure the rapid and efficient deployment of wire and radio communications ''to all the people of the United States.'' *See* 47 U.S.C. 151. Further, allowing applicants to seek bidding credits for non-tribal areas immediately adjacent to tribal communities may make it more likely that entities will seek bidding credits to serve tribal lands. Accordingly, the Commission seeks comment on whether it should give those applicants who commit to serve a qualifying tribal area the ability to augment the bidding credit for also serving adjacent non-tribal areas.

17. In the event that the bidding credit is extended to non-tribal areas, the Commission seeks comment on how to define the geographic areas that would trigger eligibility for an additional credit amount. For example, is it suitable to use county-wide penetration rates to establish eligibility, or, given the large size of certain counties, would the use of county-wide figures fail to accurately gauge the penetration level of some specific areas? Alternatively, the Commission seeks comment on whether measuring telephone penetration based on smaller geographic areas would more accurately reflect underserved areas. For example, the Census Bureau tabulates data according to a variety of small geographic areas, such as census tracts or census blocks.

18. The Commission also requests comment on the appropriate certification process; *e.g.* is it sufficient that the applicant itself certify that the applicable non-tribal area has a telephone penetration rate that meets the percentage threshold to qualify for the credit? In particular, the Commission requests comment on the possible method(s) that would enable it to accurately target the non-tribal areas that share the same characteristics of tribal lands and are thus appropriate to target for support through bidding credits. Although it is likely that areas adjacent to tribal lands have significant tribal populations, and may possess characteristics (*e.g.* geographic remoteness, low subscribership) that similarly warrant support, the Commission recognizes that certain areas immediately adjacent to tribal lands include highly populated, urban areas. The Commission therefore requests comment on any widely applicable methodology that would enable the Commission to easily distinguish between urban/highly

populated areas with high telephone penetration rates and those that have characteristics warranting support. The Commission seeks comment on any other measures or conditions that should be adopted that will safeguard the integrity of the Commission's bidding credit program.

19. Further, the Commission tentatively concludes that, in the event it extends the bidding credit's applicability to adjoining non-tribal lands, it should use the existing formula to calculate the additional credit. In order to determine the total credit for a market, the applicable ''square kilometers'' of the relevant non-tribal area would be added to the qualifying tribal area within the license market. The Commission seeks comment on this approach, and on any alternative ways to calculate the credit.

20. In the *R&O*, the Commission concluded that it has the authority to establish the tribal lands bidding credit because the Act, *inter alia*, directs the Commission to: (1) Facilitate the rapid and efficient deployment of wire and radio communications ''to all the people of the United States;'' (2) foster ''the development and rapid deployment of new technologies, products, and services for the benefit of the public, including those residing in rural areas;'' and, (3) promote the ''efficient and intensive use of the electromagnetic spectrum.'' *See R&O,* citing 47 U.S.C. 151, 47 U.S.C. 309(j)(3)(A), and 47 U.S.C. 309(j)(3)(D). The Commission further concluded that section 706(A) of the Act authorizes bidding credits designed to remove or reduce economic barriers to infrastructure investment. The Commission tentatively concludes that these provisions also allow the Commission to extend the bidding credit to cover adjacent non-tribal areas. The Commission requests comment on this analysis.

III. Procedural Matters

A. *Ex Parte* Rules—Permit-But-Disclose Proceeding

21. This proceeding is a permit-but-disclose notice and comment rulemaking proceeding. *Ex parte* presentations are permitted, except during the Sunshine Agenda period, provided they are disclosed as provided in Commission rules. *See generally* 47 CFR 1.1202, 1.1203, and 1.1206.

B. Initial Paperwork Reduction Act Analysis

22. The *2nd FNPRM* has been analyzed with respect to the Paperwork Reduction Act and found to impose no new or modified reporting and recordkeeping requirements or burdens on the public.

C. Initial Regulatory Flexibility Analysis

23. The Commission has prepared an Initial Regulatory Flexibility Analysis (IRFA) for the *2nd FNPRM*, as required by the Regulatory Flexibility Act. The Commission requests written public comment on the analysis. Comments must be filed in accordance with the same filing deadlines as comments filed in response to the *2nd FNPRM*, and must have a separate and distinct heading designating them as responses to the IRFA. The Commission will send a copy of the *2nd FNPRM*, including this IRFA, to the Chief Counsel for Advocacy of the Small Business Administration (SBA). *See* 5 U.S.C. 603(a).

Need for, and Objectives of, the 2nd FNPRM

24. The tribal lands bidding credit program is still in its early stages and few carriers have taken advantage of the bidding credit thus far. The record, however, is unclear regarding the reasons behind the lack of response to the bidding credit. Because the record in this proceeding thus far is not sufficient to make reasoned decisions as to what steps, if any, should be taken to further encourage carriers to provide coverage to tribal lands, the Commission seeks additional comment regarding this issue.

25. *Modifying the construction requirements of the tribal lands bidding credit.* The Commission's rules currently impose more stringent construction requirements on carriers who seek the tribal lands bidding credit than those who do not. All carriers taking advantage of the bidding credit are required to serve 75 percent of the population of the qualifying tribal land for which the credit was awarded, and must do so within three years of license grant. One possible reason behind the lack of participation in the bidding credit program is that carriers find that difficulties involved in meeting the enhanced construction requirements are not sufficiently mitigated by the existing bidding credit. For example, there may be conditions, such as technical obstacles, economic factors, or other difficulties, that may make it difficult for carriers to satisfy the stricter construction requirement. Circumstances may exist on remote tribal lands such as low population density, rough terrain, and other factors that can negatively affect the ability of carriers to provide the requisite coverage to facilities in those areas. Accordingly, the Commission seeks comment as to whether it should reconsider the buildout obligations imposed on carriers utilizing the tribal lands bidding credit. The Commission seeks comment on whether the requirement that carriers cover 75 percent of the population within three years remains feasible, or whether it should moderate the buildout criteria. Specifically, the Commission requests comment on what factors or circumstances exist that warrant an across-the-board relaxation of the bidding credit construction requirements.

26. In the event that it is determined that the construction requirements should be eased, the Commission seeks comment on how the requirements should be modified. For example, should the population of the qualifying tribal land covered by a carrier be lessened (*i.e.* reduced to a number below 75 percent)? Alternatively, should the time period in which to provide coverage to 75 percent of the tribal population be extended to a construction period longer than three years? Or is the appropriate remedy a combination of a reduced population coverage requirement and an expanded construction period? Should the Commission adopt a variation of the combination method such as a tiered approach? In other words, construction would occur in phases, *e.g.*, a certain percentage of the total tribal population must be covered in three years, and a greater percentage would be covered at the five-year mark.

27. A comprehensive change of the construction requirements may not be the appropriate solution. It may be that satisfying the tribal lands buildout requirement may be more difficult in certain tribal areas in the country than in others. There may be difficulties or conditions specific to certain tribal lands, that may make it difficult for carriers to satisfy the stricter construction requirement, while other carriers deploying the same type of service may have no difficulties in meeting the construction requirements in other tribal areas. Similarly, the ability to comply with the tribal lands bidding credit may depend on the particular wireless service at issue. The Commission's rules governing general construction and operation obligations of licensees reflect several approaches that match a type of license (*i.e.* site-based versus geographic market) or service (*e.g.* PCS or lower band 700 MHz) with a specific buildout requirement. It may therefore be preferable to deal with these situations on a case-by-case or service-by-service basis rather than an across-the board

method. The Commission therefore seeks comment on whether buildout difficulties should be resolved using an ad hoc or waiver approach.

28. *Increasing the bidding credit limit.* In addition to the required construction requirements, another possibility for the poor response may be that the existing bidding credit may not provide carriers sufficient incentive to deploy facilities on tribal lands. Although no applicant has yet requested a larger credit than the one called for under the tribal lands bidding credit methodology, it may be that the current bidding credit amounts are not adequate to allow carriers to recoup a significant portion of infrastructure costs. Accordingly, the Commission seeks comment on whether the existing tribal lands bidding credit remains effective in encouraging carriers to provide service in tribal areas. The Commission also requests comment on whether and how the bidding credit amount and methodology should be modified to provide a greater incentive for carriers to deploy facilities on tribal lands.

29. *Adjustment of the Bidding Credit based on 2000 Census Data.* Recently issued data from the 2000 Census indicates that telephone penetration rates on tribal lands have increased appreciably from the levels reported in 1990. However, despite the improvement in access to basic telephone service experienced by many tribal areas, the census information reveals that telephone penetration rates on tribal lands remain well below the 97.6 percent penetration rate found in the country as a whole. Certain tribal lands continue to have unusually low telephone penetration levels despite gains in subscribership numbers since the 1990 Census. Accordingly, the Commission seeks comment on whether the improved tribal penetration rates require that certain aspects of the bidding credit be modified. For example, should the credit formula be adjusted using 2000 Census figures instead of 1990 Census figures? While some of the more populous tribal areas continue to have penetration rates below 70 percent, many tribal lands now have penetration rates above 70 percent. Accordingly, to the extent that tribal penetration rates have improved, but remain below the national average, should the bidding credit formula be modified so that tribal areas with penetration rates greater than 70 percent but below the national average are eligible for the credit? What should the benchmark be? Further, with respect to tribal lands that have been identified by the 2000 Census as continuing to have unusually low penetration rates, the Commission requests comment on whether the Commission should make adjustment to the bidding credit to provide additional incentives for such areas.

30. *Extending the Tribal Lands Bidding Credit to Adjacent Non-tribal Areas with Low Penetration Rates.* The Commission recognizes that there may be certain areas abutting tribal lands that also lack adequate access to telecommunications services. It is likely that some non-tribal areas share with their neighboring tribal communities the same barriers to access, such as geographic remoteness, sparse population clusters, and low income levels. Further, it is likely that areas adjacent to tribal communities also have significant Native American populations. Accordingly, in the *2nd FNPRM*, the Commission solicits comment on whether bidding credits should be extended to non-tribal areas with penetration rates of less than 70 percent. Specifically, the Commission seeks comment on whether it should allow a limited expansion of the tribal lands bidding credit program that would allow carriers who seek bidding credits in order to serve qualifying tribal lands to obtain additional credit for extending their coverage to immediately adjacent non-tribal areas that also have penetration rates of less than 70 percent.

Legal Basis

31. The Commission tentatively concludes that it has authority under sections 4(i), 303(r), 309(j) and 706 of the Communications Act of 1934, as amended, 47 U.S.C. 154(i), 303(r), 309(j) and 706, to adopt the proposals set forth in the *2nd FNPRM.*

Description and Estimate of the Number of Small Entities to which the rules will apply.

32. The RFA directs agencies to provide a description of, and where feasible, an estimate of the number of small entities that may be affected by the rules adopted herein. 5 U.S.C. 604(a)(3). The RFA generally defines the term ''small entity'' as having the same meaning as the terms ''small business,'' ''small organization,'' and ''small governmental jurisdiction.'' 5 U.S.C. 601(6). In addition, the term ''small business'' has the same meaning as the term ''small business concern'' under the Small Business Act. 5 U.S.C. 601(3) (incorporating by reference the definition of ''small business concern'' in the Small Business Act, 15 U.S.C. 632). A ''small business concern'' is one which: (1) Is independently owned and operated; (2) is not dominant in its field of operation; and (3) satisfies any additional criteria established by the Small Business Administration (SBA). 15 U.S.C. 632.

33. Cellular Licensees. The SBA has developed a small business size standard for small businesses in the category ''Cellular and Other Wireless Telecommunications.'' 13 CFR 121.201, North American Industry Classification System (NAICS) code 513322. Under that SBA category, a business is small if it has 1,500 or fewer employees. According to the Bureau of the Census, only twelve firms from a total of 1238 cellular and other wireless telecommunications firms operating during 1997 had 1,000 or more employees. Therefore, even if all twelve of these firms were cellular telephone companies, nearly all cellular carriers were small businesses under the SBA's definition. In addition, the Commission notes that there are 1807 cellular licenses; however, a cellular licensee may own several licenses. According to the most recent *Trends in Telephone Service* data, 858 carriers reported that they were engaged in the provision of either cellular service, Personal Communications Service (PCS), or Specialized Mobile Radio telephony services, which are placed together in that data. *See Trends in Telephone Service*, Industry Analysis Division, Wireline Competition Bureau, Table 5.3—Number of Telecommunications Service Providers that are Small Businesses (May 2002). The Commission has estimated that 291 of these are small under the SBA small business size standard. Accordingly, based on this data, the Commission estimates that not more than 291 cellular service providers will be affected by these revised rules.

34. 220 MHz Radio Service—Phase I Licensees. The 220 MHz service has both Phase I and Phase II licenses. Phase I licensing was conducted by lotteries in 1992 and 1993. There are approximately 1,515 such non nationwide licensees and four nationwide licensees currently authorized to operate in the 220 MHz band. The Commission has not developed a definition of small entities specifically applicable to such incumbent 220 MHz Phase I licensees. To estimate the number of such licensees that are small businesses, the Commission applies the definition under the SBA rules applicable to ''Cellular and Other Wireless Telecommunication'' companies. This category provides that a small business is a wireless company employing no more than 1,500 persons. According to the Bureau of the Census, only twelve firms from a total of 1238 cellular and other wireless telecommunications firms operating during 1997 had 1,000

or more employees. If this general ratio continues in 2002 in the context of Phase I 220 MHz licensees, the Commission estimates that nearly all such licensees are small businesses under the SBA's small business standard.

35. 220 MHz Radio Service '' Phase II Licensees. The Phase II 220 MHz service is a new service, and is subject to spectrum auctions. In the *220 MHz Third Report and Order,* the Commission adopted a small business size standard for defining ''small'' and ''very small'' businesses for purposes of determining their eligibility for special provisions such as bidding credits and installment payments. *See* Amendment of Part 90 of the Commission's Rules to Provide for the Use of the 220–222 MHz Band by the Private Land Mobile Radio Service, PR Docket No. 89–552, *Third Report and Order,* 62 FR 16004 (April 3, 1997). This small business standard indicates that a ''small business'' is an entity that, together with its affiliates and controlling principals, has average gross revenues not exceeding $15 million for the preceding three years. A ''very small business'' is defined as an entity that, together with its affiliates and controlling principals, has average gross revenues that do not exceed $3 million for the preceding three years. The SBA has approved these small size standards. Auctions of Phase II licenses commenced on September 15, 1998, and closed on October 22, 1998. In the first auction, 908 licenses were auctioned in three different sized geographic areas: three nationwide licenses, 30 Regional Economic Area Group (EAG) Licenses, and 875 Economic Area (EA) Licenses. Of the 908 licenses auctioned, 683 were sold. Thirty-nine small businesses won licenses in the first 220 MHz auction. The second auction included 225 licenses: 216 EA licenses and 9 EAG licenses. Fourteen companies claiming small business status won 158 licenses.

36. 700 MHz Guard Band Licenses. In the *700 MHz Guard Band Order,* the Commission adopted a small business size standard for ''small businesses'' and ''very small businesses'' for purposes of determining their eligibility for special provisions such as bidding credits and installment payments. *See* Service Rules for the 746–764 MHz Bands, and Revisions to Part 27 of the Commission's Rules, WT Docket No. 99–168, *Second Report and Order,* 65 FR 17594 (April 4, 2000). A small business is an entity that, together with its affiliates and controlling principals, has average gross revenues not exceeding $40 million for the preceding three years. Additionally, a ''very small business'' is an entity that, together with its affiliates and controlling principals, has average gross revenues that are not more than $15 million for the preceding three years. An auction of 52 Major Economic Area (MEA) licenses commenced on September 6, 2000, and closed on September 21, 2000. Of the 104 licenses auctioned, 96 licenses were sold to 9 bidders. Five of these bidders were small businesses that won a total of 26 licenses. A second auction of 700 MHz Guard Band licenses commenced on February 13, 2001 and closed on February 21, 2001. All eight of the licenses auctioned were sold to three bidders. One of these bidders was a small business that won a total of two licenses.

37. Lower 700 MHz Band Licenses. The Commission adopted criteria for defining three groups of small businesses for purposes of determining their eligibility for special provisions such as bidding credits. *See* Reallocation and Service Rules for the 698–746 MHz Spectrum Band (Television Channels 52–59), GN Docket No. 01–74, *Report and Order,* 67 FR 5491 (February 6, 2002). The Commission defined a small business as an entity that, together with its affiliates and controlling principals, has average gross revenues not exceeding $40 million for the preceding three years. A very small business is defined as an entity that, together with its affiliates and controlling principals, has average gross revenues that are not more than $15 million for the preceding three years. Additionally, the lower 700 MHz Service has a third category of small business status that may be claimed for Metropolitan/Rural Service Area (MSA/RSA) licenses. The third category is entrepreneur, which is defined as an entity that, together with its affiliates and controlling principals, has average gross revenues that are not more than $3 million for the preceding three years. An auction of 704 licenses (one license in each of the 734 MSAs/RSAs and one license in each of the six Economic Area Groupings [EAGs]) commenced on August 27, 2002, and closed on September 18, 2002. Of the 740 licenses available for auction, 484 licenses were sold to 102 winning bidders. Seventy-two of the winning bidders claimed small business, very small business or entrepreneur status and won a total of 329 licenses.

38. Private and Common Carrier Paging. In the *Paging Second Report and Order,* the Commission adopted a small size standard for ''small businesses'' for purposes of determining their eligibility for special provisions such as bidding credits and installment payments. Revision of Part 22 and Part 90 of the Commission's Rules to Facilitate Future Development of Paging Systems, WT Docket No. 96–18, *Second Report and Order,* 62 FR 11616 (March 12, 1997). A small business is an entity that, together with its affiliates and controlling principals, has average gross revenues not exceeding $15 million for the preceding three years. The SBA has approved this definition. An auction of Metropolitan Economic Area (MEA) licenses commenced on February 24, 2000, and closed on March 2, 2000. Of the 985 licenses auctioned, 440 were sold. Fifty-seven companies claiming small business status won. At present, there are approximately 24,000 Private Paging site-specific licenses and 74,000 Common Carrier Paging licenses. According to the most recent *Trends in Telephone Service,* 608 carriers reported that they were engaged in the provision of either paging or ''other mobile'' services. Of these, the Commission estimates that 589 are small, under the SBA-approved small business size standard. The Commission estimates that the majority of private and common carrier paging providers would qualify as small entities under the SBA definition.

39. Broadband Personal Communications Service (PCS). The broadband PCS spectrum is divided into six frequency blocks designated A through F, and the Commission has held auctions for each block. The Commission has created a small business size standard for Blocks C and F as an entity that has average gross revenues of less than $40 million in the three previous calendar years. See Amendment of Parts 20 and 24 of the Commission's Rules—Broadband PCS Competitive Bidding and the Commercial Mobile Radio Service Spectrum Cap, WT Docket No. 96–59, *Report and Order,* 61 FR 33859 (1996); *see* also 47 CFR 24.720(b). For Block F, an additional small business size standard for ''very small business'' was added and is defined as an entity that, together with their affiliates, has average gross revenues of not more than $15 million for the preceding three calendar years. These small business size standards, in the context of broadband PCS auctions, have been approved by the SBA. No small businesses within the SBA-approved small business size standards bid successfully for licenses in Blocks A and B. There were 90 winning bidders that qualified as small entities in the Block C auctions. A total of 93 ''small'' and ''very small'' business bidders won approximately 40% of the 1,479 licenses for Blocks D, E, and F. On March 23, 1999, the Commission

reauctioned 347 C, D, E, and F Block licenses; there were 48 small business winning bidders. Based on this information, the Commission concludes that the number of small broadband PCS licensees will include the 90 winning C Block bidders and the 93 qualifying bidders in the D, E, and F blocks plus the 48 winning bidders in the re-auction, for a total of 231 small entity PCS providers as defined by the SBA small business standards and the Commission's auction rules. On January 26, 2001, the Commission completed the auction of 422 C and F Broadband PCS licenses in Auction No. 35. Of the 35 winning bidders in this auction, 29 qualified as ''small'' or ''very small'' businesses.

40. Narrowband PCS. The Commission has auctioned nationwide and regional licenses for narrowband PCS. There are 11 nationwide and 30 regional licensees for narrowband PCS. The Commission does not have sufficient information to determine whether any of these licensees are small businesses within the SBA-approved definition for radiotelephone companies. In March 2002, 106 MTA and BTA narrowband PCS licenses were granted to 4 licensees. Each of the licensees are small or very small businesses.

41. Specialized Mobile Radio (SMR). Pursuant to 47 CFR 90.814(b)(1), the Commission has established a small business size standard for purposes of auctioning 900 MHz SMR licenses, 800 MHz SMR licenses for the upper 200 channels, and 800 MHz SMR licenses for the lower 230 channels on the 800 MHz band as a firm that has had average annual gross revenues of $15 million or less in the three preceding calendar years. 47 CFR 90.814(b)(1). The SBA has approved this small business size standard for the 800 MHz and 900 MHz auctions. Sixty winning bidders for geographic area licenses in the 900 MHz SMR band qualified as small businesses under the $15 million size standard. The auction of the 525 800 MHz SMR geographic area licenses for the upper 200 channels began on October 28, 1997, and was completed on December 8, 1997. Ten (10) winning bidders for geographic area licenses for the upper 200 channels in the 800 MHz SMR band qualified as small businesses under the $15 million size standard.

42. The auction of the 1,050 800 MHz SMR geographic area licenses for the General Category channels began on August 16, 2000, and was completed on September 1, 2000. Eleven (11) winning bidders for geographic area licenses for the General Category channels in the 800 MHz SMR band qualified as small businesses under the $15 million size standard. In an auction completed on December 5, 2000, a total of 2,800 Economic Area licenses in the lower 80 channels of the 800 MHz SMR service were sold. Of the 22 winning bidders, 19 claimed ''small business'' status. Thus, 40 winning bidders for geographic licenses in the 800 MHz SMR band qualified as small business. In addition, there are numerous incumbent site-by-site SMR licensees on the 800 and 900 MHz band. The Commission awards bidding credits in auctions for geographic area 800 MHz and 900 MHz SMR licenses to firms that had revenues of no more than $15 million in each of the three previous calendar years. This analysis applies to SMR providers in the 800 MHz and 900 MHz bands that either hold geographic area licenses or have obtained extended implementation authorizations. The Commission does not know how many firms provide 800 MHz or 900 MHz geographic area SMR pursuant to extended implementation authorizations, nor how many of these providers have annual revenues of no more than $15 million. One firm has over $15 million in revenues. The Commission assumes, for purposes of this analysis, that all of the remaining existing extended implementation authorizations are held by small entities, as that small business size standard is established by SBA.

Description of Projected Reporting, Recordkeeping, and Other Compliance Requirements.

43. The *2nd FNPRM* does not propose any specific reporting, recordkeeping or compliance requirements. However, the Commission seeks comment on what, if any, requirements it should impose if it adopts the proposals set forth in the *2nd FNPRM.*

Steps Taken to Minimize Significant Economic Impact on Small Entities, and Significant Alternatives Considered.

44. The RFA requires an agency to describe any significant, specifically small business, alternatives that it has considered in developing its approach, which may include the following four alternatives (among others): (1) The establishment of differing compliance or reporting requirements or timetables that take into account the resources available to small entities; (2) the clarification, consolidation, or simplification of compliance or reporting requirements under the rule for small entities; (3) the use of performance, rather than design, standards; and (4) an exemption from coverage of the rule, or any part thereof, for small Entities. 5 U.S.C. 603(c).

45. The *2nd FNPRM* seeks comment regarding ways to adjust the current tribal lands bidding credit program in order to encourage further deployment by carriers, as well as on additional uses of the bidding credit program to facilitate the provision of service to underserved non-tribal areas adjacent to tribal communities. The *2nd FNPRM* does not make specific implementation proposals, but seeks guidance from the public on how to further expand the Commission's bidding policies. The Commission tentatively concludes that these proposals should not have a significant economic impact on small carriers.

D. Comment Dates

46. The Commission invites comment on the issues and questions set forth in the *2nd FNPRM, Paperwork Reduction Analysis, and IRFA contained* herein. Pursuant to sections 1.415 and 1.419 of the Commission's rules, interested parties may file comments on or before June 2, 2003, and reply comments on or before June 16, 2003. Comments may be filed using the Commission's Electronic Comment Filing System (ECFS) or by filing paper copies. See Electronic Filing of Documents in Rulemaking Proceedings, 63 FR 24121 (1998).

47. Comments filed through the ECFS can be sent as an electronic file via the Internet to *http://www.fcc.gov/e-file/ecfs.html.* Generally, only one copy of an electronic submission must be filed. If multiple docket or rulemaking numbers appear in the caption of this proceeding, however, commenters must transmit one electronic copy of the comments to each docket or rulemaking number referenced in the caption. In completing the transmittal screen, commenters should include their full name, Postal Service mailing address, and the applicable docket or rulemaking number. Parties may also submit electronic comments by Internet e-mail. To receive filing instructions for e-mail comments, commenters should send an e-mail to *ecfs@fcc.gov,* and should include the following words in the body of the message, ''get form <your e-mail address>.'' A sample form and directions will be sent in reply. Or you may obtain a copy of the ASCII Electronic Transmittal From (FORM–ET) at *http://www.fcc.gov/e-file/email.html.*

48. Parties who choose to file by paper must file an original and four copies of each filing. Filings can be sent by hand or messenger delivery, by commercial overnight courier, or by first-class or overnight U.S. Postal Service mail (although the Commission continues to experience delays in receiving U.S. Postal Service mail). The Commission's contractor, Vistronix,

Inc., will receive hand-delivered or messenger-delivered paper filings for the Commission's Secretary at 236 Massachusetts Avenue, NE., Suite 110, Washington, DC 20002. The filing hours at this location will be 8 a.m. to 7 p.m. All hand deliveries must be held together with rubber bands or fasteners. Any envelopes must be disposed of before entering the building.

49. Commercial overnight mail (other than U.S. Postal Service Express Mail and Priority Mail) must be sent to 9300 East Hampton Drive, Capitol Heights, MD 20743. U.S. Postal Service first-class mail, Express Mail, and Priority Mail should be addressed to 445 12th Street, SW., Washington, DC 20554. All filings must be addressed to the Commission's Secretary, Office of the Secretary, Federal Communications Commission.

If you are sending this type of document or using this delivery method . . .	It should be addressed for delivery to . . .
Hand-delivered or messenger-delivered paper filings for the Commission's Secretary.	236 Massachusetts Avenue, NE., Suite 110, Washington, DC 20002 (8 a.m. to 7 p.m.).
Other messenger-delivered documents, including documents sent by overnight mail (other than United States Postal Service Express Mail and Priority Mail).	9300 East Hampton Drive, Capitol Heights, MD 20743 (8 a.m. to 5:30 p.m.).
United States Postal Service first-class mail, Express Mail, and Priority Mail	445 12th Street, SW., Washington, DC 20554.

50. Regardless of whether parties choose to file electronically or by paper, parties should also file one copy of any documents filed in this docket with the Commission's copy contractor, Qualex International, Portals II, 445 12th Street, SW., CY–B402, Washington, DC 20554 (*see* alternative addresses above for delivery by hand or messenger) (telephone 202–863–2893; facsimile 202–863–2898) or via e-mail at *qualexint@aol.com.*

51. The full text of this document is available for public inspection and copying during regular business hours at the FCC Reference Information Center, Portals II, 445 12th Street, SW., Room CY–A257, Washington, DC 20554. This document may also be purchased from the Commission's duplicating contractor, Qualex International, Portals II, 445 12th Street, SW., Room CY–B402, Washington, DC 20554, telephone 202–863–2893, facsimile 202–863–2898, or via e-mail *qualexint@aol.com.* Alternative formats (computer diskette, large print, audio cassette and Braille) are available to persons with disabilities by contacting Brian Millin at (202) 418–7426, TTY (202) 418–7365, or at *bmillin@fcc.gov.*

IV. Ordering Clauses

52. Pursuant to sections 1, 4(i), 303(r), 309(j) and 706 of the Communications Act of 1934, as amended, 47 U.S.C. 151, 154(i), 303(r), 309(j), and 706, the *Second Further Notice of Proposed Rulemaking* is adopted.

53. The Commission's Consumer and Governmental Affairs Bureau, Reference Information Center, shall send a copy of this *Second Further Notice of Proposed Rulemaking,* including the Initial Regulatory Flexibility Analysis to the Chief Counsel for Advocacy of the Small Business Administration.

Federal Communications Commission.

Marlene H. Dortch,

Secretary.

[FR Doc. 03–10737 Filed 5–1–03; 8:45 am]

BILLING CODE 6712–01–P

Notices

Federal Register
Vol. 68, No. 85
Friday, May 2, 2003

This section of the FEDERAL REGISTER contains documents other than rules or proposed rules that are applicable to the public. Notices of hearings and investigations, committee meetings, agency decisions and rulings, delegations of authority, filing of petitions and applications and agency statements of organization and functions are examples of documents appearing in this section.

DEPARTMENT OF AGRICULTURE

Agricultural Marketing Service

[Docket. No. ST03–02]

Recordkeeping Requirements for Certified Applicators of Federally Restricted Use Pesticides; Section 610 Review

AGENCY: Agricultural Marketing Service, USDA.

ACTION: Notice of review and request for comments.

SUMMARY: This notice of review announces that the Agricultural Marketing Service (AMS) plans to review (7 CFR part 110) Recordkeeping Requirements for Certified Applicators of Federally Restricted Use Pesticides, under criteria contained in section 610 of the Regulatory Flexibility Act (RFA).

DATES: Written comments on this notice must be received by July 1, 2003.

ADDRESSES: Interested persons are invited to submit written comments concerning this notice of review. Comments must be sent to Bonnie Poli, Pesticide Records Branch, Science and Technology, AMS, USDA, 8609 Sudley Road, Suite 203, Manassas, Virginia 20110–4582; Fax: (703) 330–6110 or E-mail: *amspesticides.records@usda.gov.* All comments should reference the docket number and the date and page number of this issue of the **Federal Register** and will be made available for public inspection at the USDA Pesticide Records Branch, 8609 Sudley Road, Suite 203, Manassas, Virginia during regular business hours.

FOR FURTHER INFORMATION CONTACT: Bonnie Poli, Pesticide Records Branch, AMS, USDA, 8609 Sudley Road, Suite 203, Manassas, Virginia 60110; telephone (703) 330–7826 or E-mail: *bonnie.poli@usda.gov.*

SUPPLEMENTARY INFORMATION: Recordkeeping Requirements for Certified Applicators of Federally Restricted Use Pesticides, as amended (7 CFR part 110) require certified pesticide applicators to maintain records of federally restricted use pesticide applications for a period of 2 years. The regulations also provide for access to pesticide records by Federal or State officials, or access to record information by licensed health care professionals when needed to treat an individual who may have been exposed to restricted use pesticides, and penalties for enforcement of the recordkeeping and access provisions. The regulation is effective under the Food, Agriculture, Conservation, and Trade Act of 1990, (Pub. L. 101–624; 7 U.S.C. 136i–1).

AMS initially published in the **Federal Register** (63 FR 8014; February 18, 1999), its plan to review certain regulations, including the Recordkeeping Requirements for Certified Applicators of Federally Restricted Use Pesticides, under criteria contained in section 610 of the Regulatory Flexibility Act (RFA; U.S.C. 601–612). An updated plan was published in the **Federal Register** on January 4, 2002 (67 FR 525). Because many AMS regulations impact small entities, AMS has decided, as a matter of policy, to review certain regulations which, although they may not meet the threshold requirement under section 610 of the RFA, warrant review.

The purpose of the review will be to determine whether the rule should be continued without change, or should be amended or rescinded (consistent with the objectives of applicable statutes) to minimize impacts on small businesses. In conducting this review, AMS will consider the following factors: (1) The continued need for the rule; (2) the nature of complaints or comments received from the public concerning the rule; (3) the complexity of the rule; (4) the extent to which the rule overlaps, duplicates, or conflicts with other Federal rules, and, to the extent feasible, with State and local governmental rules; and (5) the length of time since the rule has been evaluated or the degree to which technology, economic conditions, or other factors have changed in the area affected by the rule.

Written comments, views, opinions, and other information regarding the Recordkeeping Requirements for Certified Applicators of Federally Restricted Use Pesticides rule impact on small businesses are invited.

Dated: April 28, 2003.

Kenneth C. Clayton,

Acting Administrator, Agricultural Marketing Service.

[FR Doc. 03–10870 Filed 5–1–03; 8:45 am]

BILLING CODE 3410–02–P

DEPARTMENT OF AGRICULTURE

Economic Research Service

Notice of Intent to Seek Approval to Collect Information

AGENCY: Economic Research Service, USDA.

ACTION: Notice and request for comments.

SUMMARY: In accordance with the Paperwork Reduction Act of 1995 (Pub L. 104–13) and Office of Management and Budget (OMB) regulations at 5 CFR part 1320 (60 FR 44978, August 29, 1995), this notice announces the Economic Research Service's (ERS) intention to request approval for a new information collection from State officials in the Special Supplemental Nutrition Program for Women, Infants, and Children (WIC); local WIC agencies; State Medicaid officials; and Medicaid Managed Care Organizations (MCO).

DATES: Written comments on this notice must be received by July 7, 2003, to be assured of consideration.

ADDITIONAL INFORMATION OR COMMENTS: Requests for additional information regarding this notice should be directed to Alex Majchrowicz, Food Assistance Branch, Food and Rural Economics Division, Economic Research Service, U.S. Department of Agriculture, 1800 M St. NW., Washington, DC 20036–5831. Submit electronic comments to *ALEXM@ers.usda.gov.* or telephone 202–694–5355.

SUPPLEMENTARY INFORMATION:

Title: An Assessment of the Impact of Medicaid Managed Care on WIC Program Coordination with Primary Care Services.

OMB Number: Not yet issued.

Expiration Date: Two years from date of issuance.

Type of Request: Approval to collect information from State WIC officials; local WIC agencies; State Medicaid officials; and Medicaid Managed Care Organizations (MCO).

Abstract: USDA's Economic Research Service (ERS) seeks detailed information

that will determine the impact Medicaid managed care may have on the ability of the Special Supplemental Nutrition Program for Women, Infants, and Children (WIC) to coordinate services with primary care providers. The WIC program is a supplemental nutrition program providing supplemental foods, nutrition education, and referral to health care services for pregnant and breastfeeding women, infants, and children up to age five. The program is designed to serve as an adjunct to the health care delivery system for clients with an identified nutritional/ medical risk. In the past, State and local WIC programs have worked with the Public Health Departments and other direct primary care providers to ensure that clients have access to appropriate health care services. State Medicaid programs have been a major provider of health care services to these women, infants, and children. However, it is unknown how the movement of Medicaid programs to managed care has changed the dynamics of the WIC program's ability to coordinate with and refer to primary care services. This data collection effort will ensure that USDA can appropriately plan to assist State WIC programs in carrying out their mandate to refer clients to primary care services.

Toward this end, data will be collected from State WIC program officials, State Medicaid officials, selected local WIC agencies, and Managed Care Organizations (MCO). The data collection period is estimated to last one month for the State-level programs and an additional 6 weeks for the local WIC agencies and MCOs. To capture data about coordination of the WIC and Medicaid programs, a telephone survey of all WIC and Medicaid programs in the 50 States and District of Columbia will be conducted to determine the extent to which formal coordination efforts have been undertaken, and to describe the agreements, requirements, and incentives included in these efforts. The survey will be directed at the State WIC and Medicaid directors, or their designees responsible for coordination efforts.

To obtain more detailed information about coordination efforts and the manner in which they impact program operations, detailed case studies will be conducted in six selected States. The first step in the case study process will be to conduct a telephone survey of local WIC directors within each of the case study States to discuss how State-level efforts to coordinate services have been implemented locally. Second, a series of in-depth site visits will be conducted in (at maximum) two counties in each of the six States to visit all local WIC clinics and the MCOs with which they coordinate services. Criteria for selection of the counties will include such factors as number of clinics serving a particular geographic area, type of local agency sponsoring the clinics, caseload size and composition, types of managed care plans serving the area, and the type of coordination activity undertaken.

Two specific activities will comprise the in-depth site visits. Interviews with local clinic service delivery staff—clinic site managers, nutrition professionals, and WIC clerks—will be conducted. The results of these interviews will be used to enhance and supplement the results from the survey of local agency directors. At least three rural clinic sites will be selected among the six States. Also, in order to have a complete picture of efforts being made to coordinate WIC with Medicaid managed care services, interviews with key managed care plan officials will be conducted in conjunction with the visits to the local WIC clinics.

Estimated Number of Respondents: A combined total of 218 respondents are necessary to complete the questionnaires. An average of 51 questionnaires will be collected from State WIC officials and an additional 51 questionnaires from State Medicaid officials. Questionnaires will also be administered to up to 20 local WIC agencies in six States (with a maximum of 80 local agencies) and up to six MCOs in the same six States.

Number of Responses per Respondent: The individuals participating in the data collection effort will respond only once.

Estimated Total Responses: Maximum total number of responses: 218 (51 State WIC officials, 51 State Medicaid officials, 80 local WIC agencies, and 36 MCOs.)

Hours per Response: State WIC and Medicaid survey: 30 minutes. Local WIC agency and MCO: 45 minutes.

Total Reporting Hours: Maximum total reporting hours: 138 hours (51 State WIC offices @ 30 minutes + 51 State Medicaid offices @ 30 minutes + 80 local WIC agencies @ 45 minutes + 36 MCOs @ 45 minutes).

Comments: Comments are invited on (a) whether the proposed collection of information is necessary for the proper performance of the functions of the agency, including whether the information has practical utility; (b) the accuracy of the agency's estimate of the burden of the proposed collection of information, including the validity of the methodology and assumptions used; (c) ways to enhance the quality, utility and clarity of the information to be collected; (d) ways to minimize the burden of the collection of information on those who are to respond, including the use of appropriate automated, electronic, mechanical, or other technological collection techniques or other forms of information technology. Comments should be sent to the address stated in the preamble. All responses to this notice will be summarized and included in the request for OMB approval. All comments will also become a matter of public record.

Dated: April 27, 2003.

Susan Offutt,

Administrator, Economic Research Service, USDA.

[FR Doc. 03–10872 Filed 5–1–03; 8:45 am]

BILLING CODE 3410–18–P

DEPARTMENT OF AGRICULTURE

Forest Service

Madera County Resource Advisory Committee

AGENCY: Forest Service, USDA.

ACTION: Notice of resource advisory committee meeting.

SUMMARY: Pursuant to the authorities in the Federal Advisory Committee Act of 1972 (Pub. L. 92–463) and under the secure Rural Schools and Community Self-Determination Act of 2000 (Pub. L. 106–393) the Sierra National Forest's Resource Advisory Committee for Madera County will meet on Monday, May 19, 2003. The Madera Resource Advisory Committee will meet at the Spring Valley Elementary School in O'Neals, CA. The purpose of the meeting is: review progress of FY 2002 accounting, review new Forest Service Region 5 RAC Web site, finalize Madera County RAC mission and clarify voting procedures.

DATES: The Madera Resource Advisory Committee meeting will be held Monday, May 29, 2003. The meeting will be held from 7 p.m. to 9 p.m.

ADDRESSES: The Madera County RAC meeting will be held at the Spring Valley Elementary School, 46655 Road 200, O'Neals, CA 93645.

FOR FURTHER INFORMATION CONTACT: Dave Martin, U.S.D.A., Sierra National Forest, 57003 Road 225, North Fork, CA, 93643 (559) 877–2218 ext. 3100; e-mail: *dmartin05@fs.fed.us.*

SUPPLEMENTARY INFORMATION: Agenda items to be covered include: (1) Review progress of FY 2002 accounting; (2) review new Forest Service Region 5

RAC Web site, (3) review Madera County RAC mission and; (4) clarify voting procedures. Public input opportunity will be provided and individuals will have the opportunity to address the Committee at that time.

Dated: April 25, 2003.

David W. Martin,

District Ranger.

[FR Doc. 03–10851 Filed 5–1–03; 8:45 am]

BILLING CODE 3410–11–M

COMMITTEE FOR PURCHASE FROM PEOPLE WHO ARE BLIND OR SEVERELY DISABLED

Procurement List; Proposed Additions

AGENCY: Committee for Purchase From People Who Are Blind or Severely Disabled.

ACTION: Proposed additions to Procurement List.

SUMMARY: The Committee is proposing to add to the Procurement List products and services to be furnished by nonprofit agencies employing persons who are blind or have other severe disabilities.

Comments Must Be Received on or Before: June 1, 2003.

ADDRESSES: Committee for Purchase From People Who Are Blind or Severely Disabled, Jefferson Plaza 2, Suite 10800, 1421 Jefferson Davis Highway, Arlington, Virginia 22202–3259.

FOR FURTHER INFORMATION CONTACT: Sheryl D. Kennerly, (703) 603–7740.

SUPPLEMENTARY INFORMATION: This notice is published pursuant to 41 U.S.C 47(a)(2) and 41 CFR 51–2.3. Its purpose is to provide interested persons an opportunity to submit comments of the proposed actions.

If the Committee approves the proposed additions, the entities of the Federal Government identified in the notice for each product or service will be required to procure the products and services listed below from nonprofit agencies employing persons who are blind or have other severe disabilities.

I certify that the following action will not have a significant impact on a substantial number of small entities. The major factors considered for this certification were:

1. If approved, the action will not result in any additional reporting, recordkeeping or other compliance requirements for small entities other than the small organizations that will furnish the products and services to the Government.

2. If approved, the action will result in authorizing small entities to furnish the products and services to the Government.

3. There are no known regulatory alternatives which would accomplish the objectives of the Javits-Wagner-O'Day Act (41 U.S.C. 46–48c) in connection with the products and services proposed for addition to the Procurement List. Comments on this certification are invited. Commenters should identify the statement(s) underlying the certification on which they are providing additional information.

The following products and services are proposed for addition to Procurement List for production by the nonprofit agencies listed:

Products

Product/NSN: Blue & White Finishing Mops, 7920–00–NIB–0407 (Medium), 7920–00–NIB–0408 (Large)
NPA: New York City Industries for the Blind, Brooklyn, New York.
Contract Activity: Office Supplies & Paper Products Acquisition Center, New York, New York.

Services

Service Type/Location: Base Supply Center & Individual Equipment Element, Air Force Flight Test Center (AFFTC), Edwards AFB, California.
NPA: Industries for the Blind, Inc., Milwaukee, Wisconsin.
Contract Activity: 95th MSG/LGRQ, Edwards AFB, California.
Service Type/Location: Food Service, Michigan Army National Guard, Maneuver Training Center, Camp Grayling, Michigan.
NPA: G.W. Services of Northern Michigan, Inc., Traverse City, Michigan.
Contract Activity: U.S. Property and Fiscal Officer for Michigan, Lansing, Michigan.
Service Type/Location: Food Service, U.S. Property and Fiscal Officer, Wisconsin Military Academy, Fort McCoy, Wisconsin.
NPA: Challenge Unlimited, Inc., Alton, Illinois.
Contract Activity: U.S. Property and Fiscal Officer for Wisconsin, Camp Douglas, Wisconsin.
Service Type/Location: Grounds Maintenance, Douglas Recreation Center, Garrison, North Dakota.
NPA: MVW Services, Inc., Minot, North Dakota.
Contract Activity: U.S. Army Corps of Engineers—Omaha, Omaha, Nebraska.
Service Type/Location: Janitorial/Custodial, Abingdon Memorial USARC, Abingdon, Virginia.
NPA: Highlands Community Services Board, Bristol, Virginia.
Contract Activity: 99th Regional Support Command, Coraopolis, Pennsylvania.
Service Type/Location: Janitorial/Custodial, FAA Tower and Base Building, Bloomington-Normal Airport, Bloomington, Illinois.
NPA: Occupational Development Center, Bloomington, Illinois.
Contract Activity: Federal Aviation Administration, Des Plaines, Illinois.
Service Type/Location: Janitorial/Custodial, Naval & Marine Corps Reserve Center, Billings, Montana.
NPA: Community Option Resource Enterprises, Inc., Billings, Montana.
Contract Activity: Naval Facilities Engineering Command—Everett, Everett, Washington.
Service Type/Location: Janitorial/Custodial, U.S. Customs Service, Seattle, Washington.
NPA: Northwest Center for the Retarded, Seattle, Washington.
Contract Activity: U.S. Customs Service, Indianapolis, Indiana.
Service Type/Location: Janitorial/Custodial, Western Area Power Administration, Devils Lake Substation, Devils Lake, North Dakota.
NPA: Lake Region Corporation, Devils Lake, North Dakota.
Contract Activity: Western Area Power Administration, Bismarck, North Dakota.

Sheryl D. Kennerly,

Director, Information Management.

[FR Doc. 03–10924 Filed 5–1–03; 8:45 am]

BILLING CODE 6353–01–P

COMMISSION ON CIVIL RIGHTS

Agenda and Notice of Public Meeting of the Georgia Advisory Committee

Notice is hereby given, pursuant to the provisions of the rules and regulations of the U.S. Commission on Civil Rights, that a conference call of the Georgia Advisory Committee to the Commission will convene at 2 p.m. and adjourn at 4 p.m. on Wednesday, April 30, 2003. The purpose of the conference call is to discuss major Civil Rights issues in Georgia.

This conference call is available to the public through the following call-in number: 1–800–659–1203 access code 16638942. Any interested member of the public may call this number and listen to the meeting. Callers can expect to incur charges for calls not initiated using the supplied call-in number or over wireless lines and the Commission will not refund any incurred charges. Callers will incur no charge for calls using the call-in number over land-line connections. Persons with hearing impairments may also follow the proceedings by first calling the Federal Relay Service at 1–800–977–8339 and providing the Service with the conference call number and access code.

To ensure that the Commission secures an appropriate number of lines for the public persons are asked to register by contacting Bobby D. Doctor, Director of the Southern Regional Office, 404–562–7000 (TDD 404–562–7004), by 4 p.m. on Tuesday, April 29, 2003.

The meeting will be conducted pursuant to the provisions of the rules and regulations of the Commission.

Dated at Washington, DC, April 24, 2003.

Ivy L. Davis,

Chief, Regional Programs Coordination Unit.

[FR Doc. 03–10901 Filed 5–1–03; 8:45 am]

BILLING CODE 6335–01–P

COMMISSION ON CIVIL RIGHTS

Sunshine Act Meeting Notice

AGENCY: Commission on Civil Rights.

DATE AND TIME: Friday, May 9, 2003, 9:30 a.m.

PLACE: U.S. Commission on Civil Rights, 624 Ninth Street, NW., Room 540, Washington, DC 20425

STATUS:

Agenda

I. Approval of Agenda
II. Approval of Minutes of April 11, 2003 Meeting
III. Announcements
IV. Staff Director's Report
V. Funding Federal Civil Right Enforcement: 2004 Report
VI. State Advisory Committee Report on Arab and Muslim Civil Rights Issues in the Chicago Metropolitan Area: Post-September 11 (Illinois)
VI. Future Agenda Items

FOR FURTHER INFORMATION CONTACT: Les Jin, Press and Communications, (202) 376–7700.

Debra A. Carr,

Deputy General Counsel.

[FR Doc. 03–10992 Filed 4–30–03; 11:41 am]

BILLING CODE 6335–01–M

DEPARTMENT OF COMMERCE

National Institute of Standards and Technology

Notice of Jointly Owned Invention Available for Licensing

AGENCY: National Institute of Standards and Technology, Commerce.

ACTION: Notice of jointly owned invention available for licensing.

SUMMARY: The invention listed below is owned in part by the U.S. Government, as represented by the Department of Commerce, and Snorkel, Inc. The Department of Commerce's interest in the invention is available for licensing in accordance with 35 U.S.C. 207 and 37 CFR part 404 to achieve expeditious commercialization of results of federally funded research and development.

FOR FURTHER INFORMATION CONTACT: Technical and licensing information on the invention may be obtained by writing to: National Institute of Standards and Technology, Technology Partnerships Division, Attn: Mary Clague, Building 820, Room 213, Gaithersburg, MD 20899. Information is also available via telephone: 301–975–4188, email: *mclague@nist.gov,* or fax: 301–869–2751. Any request for information should include the NIST Docket number and title for the invention as indicated below.

SUPPLEMENTARY INFORMATION: NIST may enter into a Cooperative Research and Development Agreement (''CRADA'') with the licensee to perform further research on the invention for purposes of commercialization. The invention available for licensing is:

Docket No.: 99–012/023US.

Title: Chain Code Position Detector.

Abstract: A position detector for sensing the position of a movable member which moves along an axis relative to a stationary member. A nonrepeating N bit chain code embodied in a scale on the movable member runs along the axis. A detector fixed to the stationary member is positioned to sense a portion of the chain code. The detector has K elements (K>>N) generating a plurality of signals. A controller determines the position of the movable member relative to the stationary member as a function of the signals.

Dated: April 28, 2003.

Karen H. Brown,

Deputy Director.

[FR Doc. 03–10922 Filed 5–1–03; 8:45 am]

BILLING CODE 3510–13–P

DEPARTMENT OF COMMERCE

National Institute of Standards and Technology

Notice of Government Owned Inventions Available for Licensing

AGENCY: National Institute of Standards and Technology, Commerce.

ACTION: Notice of government owned inventions available for licensing.

SUMMARY: The inventions listed below are owned in whole by the U.S. Government, as represented by the Department of Commerce. The inventions are available for licensing in accordance with 35 U.S.C. 207 and 37 CFR part 404 to achieve expeditious commercialization of results of Federally funded research and development.

FOR FURTHER INFORMATION CONTACT: Technical and licensing information on these inventions may be obtained by writing to: National Institute of Standards and Technology, Office of Technology Partnerships, Attn: Mary Clague, Building 820, Room 213, Gaithersburg, MD 20899. Information is also available via telephone: 301–975–4188, fax 301–869–2751, or e-mail: *mary.clague@nist.gov.* Any request for information should include the NIST Docket number and title for the relevant invention as indicated below.

SUPPLEMENTARY INFORMATION: NIST may enter into a Cooperative Research and Development Agreement (''CRADA'') with the licensee to perform further research on the inventions for purposes of commercialization. The inventions available for licensing are:

Docket No.: 99–021CIP.

Title: Apparatus and Method Utilizing Bi-directional Relative Movement for Refreshable Tactile Display.

Abstract: A refreshable Braille reader apparatus and method are disclosed, the apparatus preferably utilizing a rotating cylinder having endless rows of openings defined therethrough to a display surface with a pin held in each opening and freely movable therein. Static actuators at least equal in number to the rows of openings through the cylinder are maintained at a station adjacent to the surface of the cylinder, and are configured and positioned so that the pins are selectively contractable at either of their ends by different ones of the actuators during cylinder rotation in either forward or reverse direction thereby selectively positioning first ends of the pins relative to the surface of the cylinder to allow streaming of Braille text across a display area in either forward or backward order depending upon selected direction of cylinder rotation.

Docket No.: 01–014US.

Title: Method And Device For Avoiding Chatter During Machine Tool Operation.

Abstract: The invention uses once-per-revolution sampling of the audio (or other appropriate sensor) signal during cutting to detect chatter *i.e.*, unstable machining. The synchronously sampled audio (or other appropriate sensor) machining data is shown on a real-time LED display that allows the user (machinist) to visually detect the onset of chatter and adjust machining conditions. This method of chatter avoidance requires no knowledge of machine dynamics, process specific cutting energy coefficients, or chatter theory; all of which are the key impediments to the successful implementation of high-speed machining on the shop floor. The device

described here requires no interface with the machine tool controller and could be added as an after market supplement. Additionally, it is shown that the use of this device allows determination of the well-known stability lobe diagrams without direct knowledge of the tool point dynamic response or cutting energy coefficients.

Dated: April 28, 2003.

Karen H. Brown,

Deputy Director.

[FR Doc. 03–10923 Filed 5–1–03; 8:45 am]

BILLING CODE 3510–13–P

DEPARTMENT OF COMMERCE

National Institute of Standards and Technology

[Docket No.: 030416088–3088–01]

Request for Technical Input—Standards in Trade Workshops

AGENCY: National Institute of Standards and Technology, Department of Commerce.

ACTION: Request for workshop recommendations.

SUMMARY: The National Institute of Standards and Technology (NIST) invites interested parties to submit recommendations for workshops covering specific sectors and targeted countries or regions of the world where training in the U.S. system of standards development, conformity assessment, and metrology may facilitate trade. Prospective workshops may be scheduled for one or two week periods. This notice is not an invitation for proposals to fund grants, contracts or cooperative agreements of any kind. Because there are a limited number of workshops that NIST can offer and NIST has limited resources, NIST will consider recommendations in the context of which workshops would be most useful to intended audiences. Additional information about the NIST Standards in Trade Workshops is available at *http://ts.nist.gov/ts/htdocs/210/gsig/sitdescr.htm.*

DATES: All recommendations must be submitted no later than June 15, 2003.

FOR FURTHER INFORMATION CONTACT: Libby Parker (301) 975–3089, *libby.parker@nist.gov.* Additional information about the NIST Standards in Trade workshops, to include schedules and summary reports for workshops held to date and participant information, is available at *http://ts.nist.gov/ts/htdocs/210/gsig/sitdescr.htm.*

SUPPLEMENTARY INFORMATION: The Standards in Trade Workshops are a major activity of the Global Standards and Information Group (GSIG) in the NIST Standards Services Division (SSD). The workshops are designed to provide timely information to foreign standards officials on U.S. practices in standards and conformity assessment. Participants are introduced to U.S. technology and principles in metrology, standards development and application, and conformity assessment systems.

Each workshop is a one or two week program offering a comprehensive overview of the roles of the U.S. Government, private sector, and regional and international organizations engaged in standards development and conformity assessment practices. Specific workshop objectives are to: (1) Familiarize participants with U.S. technology and practices in metrology, standardization, and conformity assessment; (2) describe and understand the roles of the U.S. Government and the private sector in developing and implementing standards; and (3) develop professional contacts as a basis for strengthening technical ties and enhancing trade. Workshop recommendations (maximum 4 pages) will address at a minimum the following points:

1. Name and Description of the Recommending Organization;

2. Point of Contact;

3. Industry Sector for Workshop Focus;

4. Calendar Dates and Duration Suggested for Workshop;

5. Workshop Objectives;

6. Anticipated Benefit for Trade and Market Access;

7. Proposed Foreign Participants:

a. Country or region;

b. Types of organizations.

8. U.S. Stakeholder Participants (*e.g.*, Associations, Agencies, Users, others);

9. Principal Topics and Recommended Speakers;

10. Related Site Visits and Events;

11. Expected Outcomes/Measures of Success.

All recommendations must be submitted no later than June 15, 2003.

Dated: April 28, 2003.

Karen H. Brown,

Deputy Director.

[FR Doc. 03–10921 Filed 5–1–03; 8:45 am]

BILLING CODE 3510–13–P

DEPARTMENT OF COMMERCE

Technology Administration

[Docket Number: 030416086–01]

The Joint High Level Advisory Panel of the United States-Israel Science and Technology Commission Established Under the Memorandum of Understanding Between the Government of the United States and the Government of Israel

AGENCY: Technology Administration, Department of Commerce.

ACTION: Notice; request for nominations for the high level advisory panel.

SUMMARY: The Technology Administration invites nominations of individuals for appointment to the Joint High Level Advisory Panel of the United States-Israel Science and Technology Commission established under a Memorandum of Understanding between the Government of the United States and the Government of Israel. The Technology Administration will consider all nominations received in response to this notice of appointment to the Joint High Level Advisory Panel.

DATES: Please submit nominations on or before 5 p.m. EDT June 2, 2003.

ADDRESSES: Please submit nominations to Kathryn Sullivan, Acting International Director, Office Technology Policy, Technology Administration, Department of Commerce, Room 4821, Washington, DC 20230. Nominations may also be submitted by fax to (202) 219–3310. Additional information about the Memorandum of Understanding, the High Level Advisory Panel, and membership requirements is found below under the subheading entitled Supplementary Information.

FOR FURTHER INFORMATION CONTACT: Kathryn Sullivan, telephone (202) 482–6805; fax (202) 219–3310, e-mail *Kathryn.Sullivan@ta.doc.gov*

SUPPLEMENTARY INFORMATION:

Goals of the Memorandum of Understanding

In January 1994, the Government of the United States and the Government of Israel (hereafter known as ''the participants'') signed a Memorandum of Understanding (MOU) establishing the United States-Israel Science and Technology Commission (hereafter known as ''the Commission'') recognizing the importance of cooperative science and technology activities between interested entities in the United States and Israel, which benefit the high technology commercial

sectors of the two countries and which create jobs and economic growth in both countries.

The Commission seeks to promote cooperative science and technology activities that encourage high technology industries in the United States and Israel to undertake innovative joint technology projects yielding significant economic benefits to both countries.

Cooperative Activities

The Commission encourages scientific exchanges between universities and research institutions in both countries leading to cooperative commercial activities; the promotion and development of technologies, including medical/biotechnologies, agricultural, environmental, energy, information technology, microelectronics, and telecommunication; and, harmonization of standards and regulations in the conduct of business.

Information on the High Level Advisory Panel

For the purposes of implementing this MOU, the Participants have jointly established a Joint High Level Advisory Panel to provide the Commission with advice on promotion of high technology commercialization. The Participants each designate members to the Panel drawn from leaders of both countries representing academia, industry and other relevant sectors. The Secretary of Commerce designates the members of the Advisory Panel from the United States. The Minister of Industry and Trade designates the members from Israel. The Panel has Co-Chairs from each country, designated for the United States by the Secretary of Commerce, and for Israel by the Minister of Industry and Trade.

The members of the Joint High Level Advisory Panel are expected to carry out the following functions:

1. Recommend to the Participants overall policies under the MOU;

2. Identify fields and forms of cooperation in accordance with the goals and objectives of the MOU;

3. Review, assess, and make specific recommendations concerning cooperative activities;

4. Prepare periodic reports concerning the activities of the Joint High Level Advisory Panel and cooperative activities undertaken under the MOU for submission to the Participants;

5. Undertake such further functions as may appropriately be approved by the Participants.

Meetings of the High Level Advisory Panel

The Joint High Level Advisory Panel is available to participate in meetings of the Commission at the request of the Commission Co-Chairs.

Length of Service

The Joint High Level Advisory Panel shall remain in effect until terminated by the Participants to the MOU. A member's length of service is not stipulated in the MOU and is discretionary with the Department of Commerce. Individuals chosen for membership serve a term that best fits the needs and objectives of the Joint High Level Advisory Panel.

Membership Criteria and Requirements

The U.S. members of the Joint High Level Advisory Panel shall be eminent leaders, broadly representative of industry, academia, or government, who have experience in technology development, technology diffusion, or international technology collaboration. They shall be U.S. citizens. They shall be familiar with the business climate and the status of technology and economic development in Israel, Israeli industry or with Israeli academic institutions. Members of the Panel serve without compensation.

The Department of Commerce is committed to equal opportunity in the workplace, and seeks a broad-based and diverse Panel membership.

Conflict of Interest

Nominees will be evaluated for their ability to contribute to the goals and objectives of the MOU. Nominees will be vetted in accordance with processes established by the Department of Commerce in February 1997, as soon as possible following tentative selection. The vetting system has three components: (1) An internal review for possible appearance of conflict problems; (2) an external review for possible appearance of problems; and (3) a recusal/ethics agreement review.

Dated: April 21, 2003.

Chris Israel,

Deputy Assistant Secretary for Technology Policy.

[FR Doc. 03–10814 Filed 5–1–03; 8:45 am]

BILLING CODE 3510–GN–P

DEPARTMENT OF DEFENSE

Department of the Navy

Notice of Availability of Government-Owned Inventions; Available for Licensing

AGENCY: Department of the Navy, DOD.

ACTION: Notice.

SUMMARY: The inventions listed below are assigned to the United States Government as represented by the Secretary of the Navy and are available for licensing by the Department of the Navy.

U.S. Patent No. 5,742,121: Thin-Film Edge Field Emitter Device and Method of Manufacture Therefore, Navy Case No. 77,175.//U.S. Patent No. 6,084,245: Field Emitter Cell and Array with Vertical Thin-Film-Edge Emitter, Navy Case No. 79,020.//U.S. Patent No. 6,168,491: Method of Forming Field Emitter Cell and Array with Vertical Thin-Film-Edge Emitter, Navy Case No. 79,930.//U.S. Patent No. 6,333,598: Low Gate Current Field Emitter Cell and Array with Vertical Thin-Film-Edge Emitter, Navy Case No. 79,853.//U.S. Patent No. 6,440,763: Methods for Manufacture of Self-Aligned Integrally Gated Nanofilament Field Emitter Cell and Array, Navy Case No. 83,058.//U.S. Patent No. 6,448,701: Self-Aligned Integrally Gated Nanofilament Field Emitter Cell and Array, Navy Case No. 82,309.//U.S. Patent Application Serial No. 10/012,612: Low Gate Current Field Emitter Cell and Array with Vertical Thin-Film-Edge Emitter, Navy Case No. 83,555.//U.S. Patent Application Serial No. 10/012,615: Low Gate Current Field Emitter Cell and Array with Vertical Thin-Film-Edge Emitter, Navy Case No. 83,556.//Navy Case No. 84,308: Novel Diols by Ringopening of Epoxics.//Navy Case No. 84,472: Novel Diols by Ringopening of Epoxics.

ADDRESSES: Requests for copies of the inventions cited should be directed to the Naval Research Laboratory, Code 1004, 4555 Overlook Avenue, SW., Washington, DC 20375–5320, and must include the Navy Case number.

FOR FURTHER INFORMATION CONTACT: Catherine M. Cotell, Ph.D., Head, Technology Transfer Office, NRL Code 1004, 4555 Overlook Avenue, SW., Washington, DC 20375–5320, telephone (202) 767–7230. Due to temporary U.S. Postal Service delays, please fax (202) 404–7920, e-mail: *cotell@nrl.navy.mil* or use courier delivery to expedite response.

(Authority: 35 U.S.C. 207, 37 CFR part 404)

Dated: April 28, 2003.

R.E. Vincent II,

Lieutenant Commander, Judge Advocate General's Corps, U.S. Navy, Federal Register Liaison Officer.

[FR Doc. 03–10849 Filed 5–1–03; 8:45 am]

BILLING CODE 3810–FF–P

DEPARTMENT OF DEFENSE

Department of the Navy

Notice of Availability of Government-Owned Inventions; Available for Licensing

AGENCY: Department of the Navy, DoD.

ACTION: Notice.

SUMMARY: The inventions listed below are assigned to the United States Government as represented by the Secretary of the Navy and are available for licensing by the Department of the Navy.

U.S. Patent No. 5,234,594: Nanochannel Filter, Navy Case No. 74,135.//U.S. Patent No. 5,264,722: Nanochannel Glass Matrix Used in Making Mesoscopic Structures, Navy Case No. 74,224.//U.S. Patent No. 5,306,661: Method of Making a Semiconductor Device Using a Nanochannel Glass Matrix, Navy Case No. 75,412.//U.S. Patent No. 5,332,681: Method of Making a Semiconductor Device by Forming a Nanochannel Mask, Navy Case No. 74,199.//U.S. Patent No. 5,585,640: Glass Matrix Doped with Activated Luminescent Nanocrystalline Particles, Navy Case No. 76,342.//U.S. Patent No. 5,606,163: All-Optical Rapid Readout, Fiber-Coupled Thermoluminescent Dosimeter System, Navy Case No. 76,626.//U.S. Patent No. 5,656,815: Thermoluminescence Radiation Dosimetry Using Transparent Glass Containing Nanocrystalline Phosphor, Navy Case No. 76,602.//U.S. Patent No. 5,811,822: Optically Transparent, Optically Stimulable Glass Composites for Radiation Dosimetry, Navy Case No. 77,637.//U.S. Patent No. 6,087,666: Optically Stimulated Luminescent Fiber Optic Radiation Dosimeter, Navy Case No. 78,583.//U.S. Patent No. 6,140,651: Optically Stimulated Fast Neutron Sensor and Dosimeter and Fiber-Optic-Coupled Fast Neutron Remote Sensor and Dosimeter, Navy Case No. 77,736.//U.S. Patent No. 6,153,339: Volume Holographic Data Storage with Doped High Optical Quality, Navy Case No. 78,514.//U.S. Patent No. 6,211,526: Marking of Materials Using Luminescent and Optically Stimulable Glasses, Navy Case No. 78,643.//U.S. Patent No. 6,297,918: Hybrid Thermal-Defocusing/Nonlinear-Scattering Broadband Optical Limiter for the Protection of Eyes and Sensors, Navy Case No. 75,855.//U.S. Patent No. 6,307,212: High Resolution Imaging Using Optically Transparent Phosphors, Navy Case No. 78,753.//Navy Case No. 75,434: Nanochannel Filter.//Navy Case No. 77,140: All-Optical Rapid Readout, Fiber-Coupled Thermoluminescent Dosimeter System.//Navy Case No. 77,141: Activated Nanocrystalline Semiconductor and Insulator Materials.//Navy Case No. 77,324: Laser-Heated Thermoluminescence Radiation Dosimeter.//Navy Case No. 79,804: Optically Stimulated Luminescent Fiber Optic Radiation Dosimeter.//Navy Case No. 79,814: Optically Stimulated Fast Neutron Dosimeter and Fiber-Optic-Coupled Fast Neutron Remote Sensor.//Navy Case No. 80,247: High Resolution Imaging Using Optically Transparent Phosphors.//Navy Case No. 83,713: Fabrication of Microelectrodes Arrays Having High Aspect Ratio Microwires.//Navy Case No. 84,115: Dose-Guided Radiotherapy.

ADDRESSES: Requests for copies of the inventions cited should be directed to the Naval Research Laboratory, Code 1004, 4555 Overlook Avenue, SW., Washington, DC 20375–5320, and must include the Navy Case number.

FOR FURTHER INFORMATION CONTACT: Catherine M. Cotell, Ph.D., Head, Technology Transfer Office, NRL Code 1004, 4555 Overlook Avenue, SW., Washington, DC 20375–5320, telephone (202) 767–7230. Due to temporary U.S. Postal Service delays, please fax (202) 404–7920, E-Mail: cotell@nrl.navy.mil or use courier delivery to expedite response.

(Authority: 35 U.S.C. 207, 37 CFR Part 404.)

Dated: April 28, 2003.

R.E. Vincent II,

Lieutenant Commander, Judge Advocate General's Corps, U.S. Navy, Federal Register Liaison Officer.

[FR Doc. 03–10850 Filed 5–1–03; 8:45 am]

BILLING CODE 3810–FF–P

DEPARTMENT OF EDUCATION

Special Education and Rehabilitative Services

AGENCY: Office of Special Education Programs, Office of Special Education and Rehabilitative Services, Department of Education.

ACTION: Notice of extension of project period and waiver.

SUMMARY: The Secretary waives the requirements in the Education Department General Administrative Regulations (EDGAR), at 34 CFR 75.250 and 75.261(a), respectively, that generally prohibit project periods exceeding 5 years and project extensions involving the obligation of additional Federal funds to enable the Technical Assistance ALLIANCE for Parent Centers to receive funding from April 1, 2003 until September 30, 2003.

DATES: This notice is effective April 1, 2003.

FOR FURTHER INFORMATION CONTACT: Donna Fluke, Department of Education, 400 Maryland Avenue, SW., room 3527, Switzer Building, Washington, DC 20202–2641. Telephone: (202) 205–9161.

If you use a telecommunications device for the deaf (TDD), you may call the Federal Information Relay Service (FIRS) at 1–800–877–8339.

Individuals with disabilities may obtain this document in an alternative format (*e.g.*, Braille, large print, audiotape, or computer diskette) on request to the contact persons listed under **FOR FURTHER INFORMATION CONTACT**.

SUPPLEMENTARY INFORMATION: On January 30, 2003, we published a notice in the **Federal Register** (68 FR 4768–4769) proposing an extension of project period and waiver in order to—

(1) Give the current grantee early notice of the possibility that additional months of funding may be available through continuation awards; and

(2) Request comments on the proposed extension and waiver.

There are no differences between the notice of proposed extension and waiver and this notice of final extension and waiver.

Public Comment

In the notice of proposed extension and waiver, we invited comments. One party submitted comments in agreement with the proposal to extend the grant period of the current grantee. We did not receive any comments opposing the proposed extension and waiver. Generally, we do not address technical and other minor changes, as well as suggested changes the law does not authorize us to make. Moreover, we do not address comments that do not express views on the substance of the proposed notice.

Waiver of Delayed Effective Date

The Administrative Procedure Act requires that a substantive rule shall be published at least 30 days before its effective date, except as otherwise provided for good cause (20 U.S.C. 553(d)(3)). During the 30-day public

comment period on this notice, no substantive comments or objections were received on the proposed extension and waiver, and no substantive changes have been made. For this reason, and in order to make a timely continuation grant to the entity affected, the Secretary has determined that a delayed effective date is not required.

Background

On July 29, 2002, we published in the **Federal Register** (67 FR 49014–49015) a notice of extension of project period and waiver. In this notice we announced that the Secretary intends to redesign the technical assistance component of the Training and Information for Parents of Children with Disabilities program and provide funding in fiscal year 2003. The notice of extension of project period and waiver was issued to enable the current technical assistance provider, the Technical Assistance ALLIANCE for Parent Centers Project to receive funding from October 1, 2002 until March 31, 2003. The grant for the ALLIANCE expired, after a 5-year project period, on September 30, 2002.

Technical assistance is provided on an ongoing basis to parent centers, and it would be contrary to the public interest to have any service lapses for the parent centers being served by the current grantee.

Reasons

We have determined that an additional period of time is needed for redesigning the technical assistance component. To avoid any lapse in service for the intended beneficiaries before the redesigned technical assistance component can be fully implemented, the Secretary will fund this project until September 30, 2003. The Secretary waives the requirements in 34 CFR 75.250 and 75.261(c)(2), which prohibit project periods exceeding 5 years and period extensions that involve the obligation of additional Federal funds. This waiver gives the affected grantee notice of the availability of an additional six months of funding.

Regulatory Flexibility Act Certification

The Secretary certifies that the extension of project period and waiver will not have a significant economic impact on a substantial number of small entities. The only small entity that would be affected is the PACER Center, Inc., which operates the Technical Assistance ALLIANCE for Parent Centers project.

Paperwork Reduction Act of 1995

This extension and waiver does not contain any information collection requirements.

Intergovernmental Review

This program is subject to the requirements of Executive Order 12372 and the regulations in 34 CFR part 79. One of the objectives of the Executive order is to foster an intergovernmental partnership and a strengthened federalism. The Executive order relies on processes developed by State and local governments for coordination and review of proposed Federal financial assistance. This document provides early notification of our specific plans and actions for this program.

Electronic Access to This Document

You may view this document, as well as all other Department of Education documents published in the **Federal Register**, in text or Adobe Portable Document Format (PDF) on the Internet at following site: *www.ed.gov/legislation/FedRegister*.

To use PDF you must have Adobe Acrobat Reader, which is available free at this site. If you have questions about using PDF, call the U.S. Government Printing Office (GPO), toll free, at 1–888–293–6498; or in the Washington, DC, area at (202) 512–1530.

Note: The official version of this document is the document published in the **Federal Register**. Free Internet access to the official edition of the **Federal Register** and the Code of Federal Regulations is available on GPO Access at: *http://www.access.gpo.gov/nara/index.html*

(Catalog of Federal Domestic Assistance Number 84.328, Training and Information for Parents of Children with Disabilities)

Dated: April 29, 2003.

Robert H. Pasternack,

Assistant Secretary for Special Education and Rehabilitative Services.

[FR Doc. 03–10886 Filed 5–1–03; 8:45 am]

BILLING CODE 4000–01–P

DEPARTMENT OF ENERGY

[DE–PS07–03ID14504]

Idle Reduction Technology Demonstration and Information Dissemination Solicitation

AGENCY: Idaho Operations Office, DOE.

ACTION: Notice of Competitive Financial Assistance Solicitation.

SUMMARY: The U.S. Department of Energy (DOE), Idaho Operations Office (ID) is seeking applications for cost shared demonstration and information dissemination projects of onboard idle reduction technologies on Class 7 & 8 trucks. The objective of this activity is to select and conduct projects that will produce information on the ability of several idle reduction technologies to enhance economic competitiveness, reduce energy consumption and reduce environmental impacts of the trucking industry. DOE is very interested in funding innovative, cost effective projects that demonstrate the capability of various idle reduction technologies to reduce fuel consumption and in disseminating that information to the trucking industry.

The projects are to address the data collection, analysis and dissemination needs identified by the U.S. DOE FreedomCAR and Vehicle Technologies Program and the trucking industry in the Idle Reduction Technology Demonstration Plan. This demonstration plan is located at *http://www.ott.doe.gov/otu/field_ops/pdfs/demo_plan_final.pdf.*

DATES: The issuance date of Solicitation Number DE–PS07–03ID14504 will be on or about April 25, 2003. An application consists of the DOE Standard Form (SF) 424 form, SF 424A form, a technical proposal, signed letters of commitment, signed letters of intent, exhibits, and other enclosures or attachments and must have an IIPS transmission time stamp not later than 3 p.m. Eastern Daylight Time on Wednesday, June 11, 2003. Late applications will not be considered.

ADDRESSES: Completed applications are required to be submitted via the U. S. Department of Energy Industry Interactive Procurement System (IIPS) at the following URL: *http://e-center.doe.gov.*

FOR FURTHER INFORMATION CONTACT: Elizabeth Dahl, Contracting Officer at *dahlee@id.doe.gov,* facsimile at (208) 526–5548, or by telephone at (208) 526–7214.

SUPPLEMENTARY INFORMATION: Approximately $250,000 of funding will be available to divide between the selected demonstration and dissemination projects in fiscal year 2003. DOE anticipates making at least two cooperative agreement awards each with a duration of twenty-four (24) months or less, with the future possibility, based on available funding, to select additional projects in fiscal year 2004, or to extend successful (as determined by DOE) demonstration projects up to an additional 24 months in order to demonstrate longer-term durability and reliability.

The solicitation is available in its full text via the Internet at the following address: *http://e-center.doe.gov.* The statutory authority for this program is the Federal Non-Nuclear Energy Research and Development Act of 1974 (Pub. L. 93–577). The Catalog of Federal Domestic Assistance (CFDA) Number for this program is 81.086, Conservation Research and Development.

Issued in Idaho Falls on April 25, 2003.

R.J. Hoyles,

Director, Procurement Services Division.

[FR Doc. 03–10883 Filed 5–1–03; 8:45 am]

BILLING CODE 6450–01–P

DEPARTMENT OF ENERGY

Office of Science; Basic Energy Sciences Advisory Committee

AGENCY: Department of Energy.

ACTION: Notice of open meeting.

SUMMARY: This notice announces a meeting of the Basic Energy Sciences Advisory Committee (BESAC). Federal Advisory Committee Act (Pub. L. 92–463, 86 Stat. 770) requires that public notice of these meetings be announced in the **Federal Register**.

DATES: Wednesday, May 28, 2003, 8:30 a.m. to 4:30 p.m..

ADDRESSES: Sheraton National Hotel, 900 South Orme Street, Arlington, VA 22204.

FOR FURTHER INFORMATION CONTACT: Sharon Long; Office of Basic Energy Sciences; U. S. Department of Energy; 19901 Germantown Road; Germantown, MD 20874–1290; Telephone: (301) 903–5565

SUPPLEMENTARY INFORMATION:

Purpose of the Meeting: The purpose of this meeting is to provide advice and guidance with respect to the basic energy sciences research program.

Tentative Agenda: Agenda will include discussions of the following:

Wednesday, May 28, 2003

- Welcome and Introduction
- News from the Office of Science
- News from the Office of Basic Energy Sciences
- Report of the Committee of Visitors' Review for Materials Sciences and Engineering

Public Participation: The meeting is open to the public. If you would like to file a written statement with the Committee, you may do so either before or after the meeting. If you would like to make oral statements regarding any of the items on the agenda, you should contact Sharon Long at 301–903–6594 (fax) or *sharon.long@science.doe.gov* (e-mail). You must make your request for an oral statement at least 5 business days prior to the meeting. Reasonable provision will be made to include the scheduled oral statements on the agenda. The Chairperson of the Committee will conduct the meeting to facilitate the orderly conduct of business. Public comment will follow the 10-minute rule.

Minutes: The minutes of this meeting will be available for public review and copying within 30 days at the Freedom of Information Public Reading Room; 1E–190, Forrestal Building; 1000 Independence Avenue, SW., Washington, DC 20585; between 9 a.m. and 4 p.m., Monday through Friday, except holidays.

Issued in Washington, DC, on April 28, 2003.

Rachel M. Samuel,

Deputy Advisory Committee , Management Officer.

[FR Doc. 03–10880 Filed 5–1–03; 8:45 am]

BILLING CODE 6450–01–P

DEPARTMENT OF ENERGY

Environmental Management Site-Specific Advisory Board, Idaho National Engineering and Environmental Laboratory

AGENCY: Department of Energy.

ACTION: Notice of open meeting.

SUMMARY: This notice announces a meeting of the Environmental Management Site-Specific Advisory Board (EM SSAB), Idaho National Engineering and Environmental Laboratory. The Federal Advisory Committee Act (Pub. L. 92–463, 86 Stat. 770) requires that public notice of these meetings be announced in the **Federal Register**.

DATES: Tuesday, May 20, 2003, 8 a.m.–6 p.m. Wednesday, May 21, 2003, 8 a.m.–5 p.m.

Public participation sessions will be held on: Tuesday, May 20, 2003, 12:15–12:30 p.m, 5:45–6 p.m. Wednesday, May 21, 2003, 11:45–12 noon, 4–4:15 p.m.

These times are subject to change as the meeting progresses. Please check with the meeting facilitator to confirm these times.

ADDRESSES: Red Lion Hotel (formerly the West Coast Hotel), 1555 Pocatello Creek Road, Pocatello, Idaho 83201.

FOR FURTHER INFORMATION CONTACT: Ms. Wendy Green Lowe, Idaho National Engineering and Environmental Laboratory (INEEL) Citizens' Advisory Board (CAB) Facilitator, Jason Associates Corporation, 545 Shoup Avenue, Suite 335B, Idaho Falls, ID 83402, Phone (208) 522–1662 or visit the Board's Internet home page at *http://www.ida.net/users/cab.*

SUPPLEMENTARY INFORMATION:

Purpose of the Board: The purpose of the Board is to make recommendations to DOE and its regulators in the areas of future use, cleanup levels, waste disposition and cleanup priorities at the INEEL.

Tentative Agenda Topics: (Agenda topics may change up to the day of the meeting. Please contact Jason Associates for the most current agenda or visit the CAB's Internet site at *http://www.ida.net/users/cab/.*)

Objectives include:

- Develop an Annual Work Plan for the CAB
- Meet with the new site manager
- Develop consensus on a Recommendation Addressing the Proposed Plan for the V-Tanks
- Presentation on Emergency planning at INEEL
- Presentation on the Annual National Environmental Policy Act Planning Summary for the INEEL
- Presentation on Current and Potential Future Missions for Argonne National Laboratory-West
- Presentation on Fiscal Year 2003 EM Budget at the INEEL
- Status Report on Transition in INEEL mission to Nuclear Energy
- Status Report on Environmental Management (EM) Program and the implementation of the Performance Management Plan (PMP) at the INEEL
  - —status of permit modification efforts for the Waste Isolation Pilot Plant to receive remote-handled transuranic waste,
  - —lawsuit addressing the Waste Incidental to Reprocessing Determination
  - —INEEL Comprehensive Environmental Response, Compensation, and Liability Act Disposal Facility
- Status Report on Science and Technology Strategies for the Water Integration Project
- Status Report on Efforts under PMP Strategic Objectives 4.4 (acceleration of off-site shipments of transuranic waste) and 4.6 (efforts to consolidate mixed low-level waste into one facility, eliminate the backlog, and cease on-site disposal of low-level) and provide citizen reactions to the overall strategy
- Status Report on Tetra Tech (formerly Foster Wheeler) dry storage facility for spent nuclear fuel

Public Participation: This meeting is open to the public. Written statements may be filed with the Board facilitator either before or after the meeting.

Individuals who wish to make oral presentations pertaining to agenda items should contact the Board Chair at the address or telephone number listed above. Request must be received five days prior to the meeting and reasonable provision will be made to include the presentation in the agenda. The Deputy Designated Federal Officer, Jerry Bowman, Assistant Manager for Laboratory Development, Idaho Operations Office, U.S. Department of Energy, is empowered to conduct the meeting in a fashion that will facilitate the orderly conduct of business. Every individual wishing to make public comment will be provided equal time to present their comments. Additional time may be made available for public comment during the presentations.

Minutes: The minutes of this meeting will be available for public review and copying at the Freedom of Information Public Reading Room, 1E–190, Forrestal Building, 1000 Independence Avenue, SW., Washington, DC 20585 between 9 a.m. and 4 p.m., Monday through Friday except Federal holidays. Minutes will also be available by writing to Ms. Penny Pink, INEEL CAB Administrator, North Wind Environmental, Inc., P.O. Box 51174, Idaho Falls, ID 83405 or by calling (208) 528–8718.

Issued at Washington, DC, on April 28, 2003.

Rachel Samuel,

Deputy Advisory Committee Management Officer.

[FR Doc. 03–10881 Filed 5–1–03; 8:45 am]

BILLING CODE 6450–01–P

DEPARTMENT OF ENERGY

Environmental Management Site-Specific Advisory Board, Fernald

AGENCY: Department of Energy.

ACTION: Notice of open meeting.

SUMMARY: This notice announces a meeting of the Environmental Management Site-Specific Advisory Board (EM SSAB), Fernald. The Federal Advisory Committee Act (Pub. L. 92–463, 86 Stat. 770) requires that public notice of these meetings be announced in the **Federal Register**.

DATES: Saturday, May 10, 2003, 8:30 a.m.—12 noon.

ADDRESSES: Crosby Senior Center, 8910 Willey Road, Harrison, OH.

FOR FURTHER INFORMATION CONTACT: Doug Sarno, The Perspectives Group, Inc., 1055 North Fairfax Street, Suite 204, Alexandria, VA 22314, at (703) 837–1197, or e-mail; *djsarno@theperspectivesgroup.com.*

SUPPLEMENTARY INFORMATION:

Purpose of the Board: The purpose of the Board is to make recommendations to DOE in the areas of environmental restoration, waste management, and related activities.

Tentative Agenda:

8:30 a.m.—Call to Order
8:30–8:45 a.m.—Chair's Remarks and Ex Officio Announcements
8:45–9:30 a.m.—Project Updates, including a new Fluor Contract
9:30–10 a.m.—2004 Budget Presentation
10–10:30 a.m.—Fernald Citizen Advisory Board (FCAB) Budget and Membership
10:30–10:45 a.m.—Break
10:45–11:15 a.m.—Follow-up Action from Natural Resource Damage Roundtable
11:15–11:45 a.m.—Silos Proposed Plan
11:45–12 noon—Public Comment

Public Participation: The meeting is open to the public. Written statements may be filed with the Board chair either before or after the meeting. Individuals who wish to make oral statements pertaining to agenda items should contact the Board chair at the address or telephone number listed below. Requests must be received five days prior to the meeting and reasonable provision will be made to include the presentation in the agenda. The Deputy Designated Federal Officer, Gary Stegner, Public Affairs Office, Ohio Field Office, U.S. Department of Energy, is empowered to conduct the meeting in a fashion that will facilitate the orderly conduct of business. Each individual wishing to make public comment will be provided a maximum of five minutes to present their comments. This **Federal Register** notice is being published less than 15 days prior to the meeting date due to programmatic issues that had to be resolved prior to the meeting date.

Minutes: The minutes of this meeting will be available for public review and copying at the Freedom of Information Public Reading Room, 1E–190, Forrestal Building, 1000 Independence Avenue, SW., Washington, DC 20585 between 9 a.m. and 4 p.m., Monday–Friday, except Federal holidays. Minutes will also be available by writing to the Fernald Citizens' Advisory Board, % Phoenix Environmental Corporation, MS–76, Post Office Box 538704, Cincinnati, OH 43253–8704, or by calling the Advisory Board at (513) 648–6478.

Issued at Washington, DC, on April 28, 2003.

Rachel Samuel,

Deputy Advisory Committee Management Officer.

[FR Doc. 03–10882 Filed 5–1–03; 8:45 am]

BILLING CODE 6450–01–P

DEPARTMENT OF ENERGY

Federal Energy Regulatory Commission

[Docket No. ER03–563–000]

Devon Power LLC, et al.; Order Accepting, in Part, Requests for Reliability Must-Run Contracts and Directing Temporary Bidding Rules

Issued April 25, 2003.

Before Commissioners: Pat Wood, III, Chairman; William L. Massey and Nora Mead Brownell.

1. In this order, we will deny the requests filed by Devon Power LLC, Middletown Power LLC, Montville Power LLC, Norwalk Power LLC (collectively Applicants) and NRG Power Marketing Inc. (NRG) for Reliability Must-Run (RMR) contracts that recover the full cost-of-service, and instead permit these RMR agreements to recover only certain going-forward maintenance costs. In addition, we direct ISO New England, Inc. (ISO–NE) to establish temporary bidding rules that permit selected RMR peaking units to raise their bids so as to recover their fixed and variable cost-of-service through the market, and change, as necessary, the market rules to allow these bids (when accepted) to set the energy price. These temporary rules are to remain in effect until ISO–NE makes a filing and places into effect certain changes to the market prior to the 2004 summer peak season as identified below. This action will benefit the New England market by establishing locational prices that more accurately reflect the value of additional supply, transmission, and/or demand response resources into the marketplace.

Background

2. On September 20, 2002, the Commission issued an order accepting a new Standard Market Design for New England (NE–SMD) which replaces New England Power Pool's (NEPOOL) former market rules with a new Market Rule 1.[1] Appendix A to Market Rule 1 includes an approach for monitoring and mitigating market power.[2] The Commission stated that this approach identifies resources potentially exercising market power by comparing their current energy supply offers with a proxy for what the resources would bid if they had no market power. The Commission added that when a supply offer significantly exceeds the proxy

[1] New England Power Pool and ISO New England, Inc., 100 FERC ¶ 61,287(2002) (September 20 Order).

[2] September 20 Order at PP 16–18.

(referred to as the reference price), an investigation is triggered that may result in mitigation. The Commission further contended that the degree to which a supply offer may exceed the reference price before triggering an investigation depends on whether transmission constraints affect a unit's dispatch or whether it is located in a chronically constrained area identified as a Designated Congestion Area (DCA).

3. In the September 20 Order, the Commission noted that units within DCAs which must be run at certain times to alleviate transmission congestion, and so are likely to have market power at those times, may be classified as RMR units. The Commission accepted a CT Proxy proposal that sets a DCA threshold to serve as a safe harbor bid.[3] The Commission added that if RMR units are not adequately compensated under the CT Proxy safe harbor price, they may apply for a special compensation arrangement under specified RMR contracts. Exhibit 4 to Appendix A of Market Rule 1 contains a pro forma cost-of-service agreement. The Commission also found that RMR fixed costs represent the costs of relieving congestion in specific regions and therefore should be reflected in the cost of energy in those regions.[4]

4. On December 20, 2002, the Commission issued an order[5] that granted in part and denied in part requests for rehearing filed in response to the Commission's September 20 Order. The Commission also accepted two compliance filings made in response to the September 20 Order.

5. In the December 20 Order, the Commission approved the CT Proxy proposed by ISO–NE that the CT Proxy price may serve as a safe harbor during all hours, and bids that exceed the CT Proxy safe harbor will be subject to the mitigation review that applies to transmission-constrained periods.

6. Also in the December 20 Order, the Commission reiterated that ISO–NE has the authority to negotiate RMR agreements as are needed to ensure system reliability. The Commission noted that the conditions under which the ISO may enter into RMR agreements are, of necessity, flexible in order to meet the changing demands of the markets. The Commission expected ISO–NE to exercise vigilance to ensure that only those units that are needed to ensure reliability receive RMR contracts, and that those contracts will not be in effect indefinitely but will be limited to the periods during which the units are needed for reliability. The Commission further stated that RMR agreements will be filed with the Commission in accordance with the Commission's rules and regulations and will be effective on the date approved by the Commission.[6]

7. On February 26, 2003, the Applicants filed four cost-of-service agreements, negotiated between NRG and ISO–NE, that pertain to generating units designated by ISO–NE as RMR units. The agreements cover 1,728 MW of capacity located within the Connecticut and Southwest Connecticut (SWCT) DCAs. Applicants contend that while the effort to keep these generators operating arose under the prior NEPOOL rate regime, the recently activated NE–SMD market may not adequately allow these generating units to recover their investments, due in-part to the lack of a locational resource adequacy mechanism and the use of the CT Proxy market mitigation mechanism within DCAs.

8. On March 25, 2003, in response to an emergency motion filed by Applicants, the Commission issued an order that allows ISO–NE to begin collecting funds that are to be disbursed to the Applicants to perform specific maintenance projects so that the units remain available for the upcoming summer peak period.[7]

Notice of Filings, Protests, and Interventions

9. Notice of Applicants' filing was published in the **Federal Register**, 68 Fed. Reg. 11541 (2003), with comments, protests, or interventions due on or before March 12, 2003. Timely motions to intervene were filed by PPL Wallingford Energy, LLC; PPL EnergyPlus, LLC; Pinpoint Power, LLC; and PG&E National Energy Group LLC.

10. Timely motions to intervene with protests were filed by ISO–NE, the Connecticut Department of Public Utility Control (CT PUC), the Connecticut Attorney General's Office (CTAG), Dominion Energy Marketing Inc. (DEMI), Connecticut Industrial Energy Consumers (CT IEC), National Grid USA (National Grid), Northeast Utilities Service Company (NU), The United Illuminating Company (UI), NSTAR Electric & Gas Corporation (NSTAR), New England Consumer-Owned Entities (NE COE), and the Connecticut Office of Consumer Counsel (CT OCC). NU also filed a supplement to its protest.

11. Timely motions to intervene with comments (or limited comments) were filed by NEPOOL, PSEG Companies, and Mirant Americas Energy Marketing L.P. On March 25, 2003, KeySpan-Ravenswood LLC (KeySpan) filed a motion to intervene out of time. The notices of intervention and the timely, unopposed motions to intervene serve to make the intervenors parties to this proceeding. *See* 18 CFR 385.214 (2002). Given the early stage of this proceeding and the absence of undue delay or prejudice, we find good cause to grant the untimely, unopposed intervention of KeySpan and accept their comments. Additionally, the Commission rejects a motion filed by DEMI to consolidate this proceeding with PPL Wallingford Energy LLC, *et al.*, Docket No. ER03–421–000, which is currently pending before the Commission.

12. Applicants, pursuant to Rules 212 and 213 of the Commission's Rules of Practice and Procedure, 18 CFR 385.212 and 385.213 (2002), filed an answer to the protests filed by NU, CT PUC, NE COE, CT IEC, UI, and DEMI on March 12, 2003. Rule 213 of the Commission's Rules of Practice and Procedure, 18 CFR 385.213 (2002), generally prohibits the filing of an answer to a protest. Accordingly, we are not persuaded to allow the Applicants answer and we will reject it.

Discussion of RMR Issues

Demonstrated Need

13. CT PUC, UI, CTAG, CT IEC, NE COE, National Grid USA (National Grid) and NSTAR urge rejection of these agreements by the Commission. Intervenors—CTAG, NSTAR—argue that in order to receive approval for cost-of-service treatment the prospective generator must show that: (1) the unit(s) are needed for reliability; and (2) the unit(s) would be retired if no RMR contract were approved. CTAG and NSTAR assert that the Applicants have not shown that they intend to retire units in the absence of cost-of-service agreements and that the ISO–NE letter does not specify a need for the Applicants' units. CTAG states that covering NRG's entire Connecticut fleet with these RMR agreements would remove 40 percent of the generation in SWCT from the market. Furthermore, CTAG argues that NRG's Interconnection Agreement with CL&P requires NRG to operate its Norwalk and Cos Cob units until fall 2003—well past the effective date of the proposed cost-

[3] The CT Proxy proposal, described in Appendix A to Market Rule 1, is based on the estimated price to recover the annual cost of a new combustion turbine unit (CT) for the region over the number of hours it is expected to operate during the year (estimated to be the number of hours the DCA is constrained). This CT Proxy serves as the safe harbor bid for all units in the DCA.

[4] September 20 Order at P 61.

[5] New England Power Pool and ISO New England, Inc., 101 FERC ¶ 61,344(2002) (December 20 Order).

[6] December 20 Order at P 33.

[7] Devon Power LLC, 102 FERC ¶ 61,314 (2003).

of-service agreements—thus effectively ruling out retirements before then.[8]

14. DEMI, UI, National Grid and CT OCC state that the only evidence to support the need for the RMR proposal is a letter from ISO–NE, which provides no more detail than stating that largely all of Connecticut's existing generation resources are needed for reliability.[9] NE COE emphasizes that ISO–NE did not analyze whether Applicants' cost recovery under NE–SMD would enable them to operate and maintain the units. CTAG argues that any proposal for cost-of-service rate treatment should apply only to generating units that are absolutely necessary, not to entire generating fleets. Similarly, CT OCC speculates that some of NRG's units may merit RMR status but questions whether NRG's entire fleet requires such status.

15. Intervenors further submit that the Applicants' proposal fails to discuss system conditions that justify the proposed cost-of-service agreements and fails to identify potential alternatives. DEMI argues that the Commission should require the Applicants to produce evidence supporting the ISO's determination and such evidence should identify the specific reliability concern, the number of days in which this concern is present, as well as the specific manner in which each NRG units responds to the reliability need.

16. UI argues that cost-of-service agreements do not ensure generation owners return on investment. UI and others assert that NRG's economic hardship is due primarily to its own investment decisions made in the competitive marketplace and that retail customers or suppliers of standard offer service should not be responsible for poor investment decisions. NE COE submits that a more appropriate analysis would examine whether the DCA CT Proxy threshold price would be sufficient to cover the Applicants' going forward costs, enabling them to operate the facilities needed for reliability.

Market Implications

17. Numerous intervenors—CT OCC, NE COE, CT DPUC, UI, CT IEC, CTAG—are concerned that approval of NRG's proposal will create incentives for other generation owners to file for cost-of-service agreements, which could have ramifications for Connecticut and NEPOOL wholesale electric markets. Moreover, several intervenors including National Grid argue that having a large percentage of Connecticut's generation operating under cost-of-service agreements could compromise and mute the price-signals needed to induce the expansion of generation, transmission, and demand resources in areas such as Southwest Connecticut. CT IEC argues that approval of the agreements could significantly increase rates of Connecticut consumers. PSEG argues that NRG's proposal will create an ''unlevel'' playing field among generators, placing generating units that are not subject to cost-based ratemaking at a competitive disadvantage.

18. PSEG urges the Commission to direct ISO–NE and NEPOOL to file on or before June 2003, for implementation as soon as possible, but not later than January 1, 2004, market rules establishing locational capacity requirements similar to those already in effect in the New York ISO.

19. DEMI states that it was able to reduce its exposure to congestion charges through the acquisition of FTRs or other mechanisms as were other entities contracted to supply standard offer load for the balance of 2003. However, there is no such protection from the costs associated with cost-of-service agreements. DEMI argues that this would unfairly saddle it and others with costs they did not cause and—given that standard offer entities are prohibited from passing the additional costs through to load—would not serve to signal new investment. DEMI submits that the solution would be for the Commission to consolidate this proceeding with Docket No. ER03–421–000 and comprehensively address the circumstances that lead to ISO–NE's conclusion that largely all generation in Connecticut should be subject to cost-of-service agreements.

20. CT PUC urges the Commission to approve under RMR agreements ''only an amount sufficient to maintain system reliability''—which would only cover deferred and scheduled maintenance outages to ensure dispatch availability for the Summer 2003 peak season. CT PUC asserts that the costs associated with the major maintenance outage expenses should be, on a very short-term basis, socialized through ISO–NE, but only to keep the units operating as a resource when needed for dispatch. Thus the CT PUC ''urges the Commission to expeditiously grant approval to allow ISO–NE to provide NRG with up to $25 million for reliability investments in addition to going forward costs necessary to ensure operation of the units and reliability of the system in SWCT.''[10]

21. CT IEC argues that an RMR revenue stream should include: (1) Compensation only for going-forward costs of operation; (2) payments for deferred maintenance administered via a mechanism that provides proper oversight that the maintenance is critical for reliability and not for economic purposes; and (3) provisions conditioning the continuance of RMR revenues upon the improved reliability of the generation units.

22. NSTAR argues that cost-of-service pricing should not be available to merchant facilities and the Commission should require the Applicants to reapply for market-based rates if the units are not retired at the conclusion of the cost-of-service agreements. NSTAR further argues that, should prices rise and Applicants take advantage of DCA bidding safe harbor provision, credits may well exceed ISO–NE's payment obligation, in which case, Applicants would retain the revenues. NSTAR argues that it is wrong for merchant generators to collect market prices in good years and resort to cost-of-service guarantees in lean years.[11]

23. NSTAR argues that the Applicants fail to identify a duration for the reliability need of these facilities. NSTAR asserts that the agreements should not be subject to automatic annual extension without action from ISO–NE. Moreover, NU and NSTAR submit that these contracts must be subject to annual review by the Commission and not allowed to continue indefinitely.

24. UI argues that the cost-of-service agreements do not give the ISO sufficient flexibility to respond to changing circumstances, for example, implementation of NE–SMD or new resources being introduced into SWCT. UI and NU urge the Commission to reduce the termination notice period from 120 days, as proposed by the Applicants, to 60 days in order to permit the ISO to terminate the agreement if there is no longer a need for the resources. NSTAR asserts the cost-of-service agreements should list identical provisions for ISO–NE termination (Sections 2.1.2 and 2.2.1 of the Applicants' proposed cost-of-service agreements stipulate 60 days and 120 days notice, respectively) and in any case 60 notice is reasonable, as was found in Sithe New Boston.[12]

25. CT DPUC asserts that the Commission should direct ISO–NE and

[8] CTAG Protest at 10.

[9] Attachment 1 to the Applicants' proposal is a letter, dated February 26, 2003, from Kevin Kirby of ISO–NE to Joseph M. DeVito of NRG Energy, Inc. It states: ''* * * the ISO–NE has conducted a reliability assessment for Connecticut for the years 2003 and 2006 and has determined that absent any transmission improvements or new resources, largely all of the existing resources in Connecticut are needed for reliability, including the NRG units.''

[10] CT DPUC Motion at 6.

[11] NSTAR Protest at 8.

[12] Sithe New Boston LLC, 98 FERC ¶ 61,164.

NEPOOL to make filings, on an emergency/expedited basis, to revise or amend NE–SMD in order to ensure adequate levels of compensation for generators providing needed reliability products and to incent market participants to build infrastructure, implement demand-side management programs, or take other appropriate measures to reduce the need for NRG's units or provide for appropriate compensation to these units.

26. CT DPUC further argues that since Connecticut ratepayers will pay most, the Commission should order that the ISO NE be required to examine the reliability need for any of these units upon written request by the CT DPUC and issue a finding within 60 days of such a request.

Commission Response

27. The RMR agreements filed by the Applicants in this proceeding were negotiated with ISO–NE in accordance with MRP 17.3. The Applicants state that they are not required to establish the need for these agreements because they were negotiated under the authority of ISO–NE.[13] ISO–NE states that it has conducted a reliability assessment for Connecticut for the years 2003 and 2006 and has determined that, absent any transmission improvements or new resources, largely all of the existing resources in Connecticut are needed for reliability.[14] ISO–NE further states that the appropriate format to be used for cost-of-service agreements is the pro forma RMR agreement that is a part of Market Rule 1.[15]

28. ISO–NE is concerned that, under its current market rules and mitigation policies, some generators needed for reliability in load pockets—*i.e.*, in DCAs—may be unable to recover their full fixed and variable costs and not be available for reliability. Ultimately, New England proposes to allow for such cost recovery with a combination of scarcity pricing and location-specific capacity payments. Until these features are implemented, however, ISO–NE has proposed (and the Commission has accepted) relaxed mitigation rules for units in DCAs with the intent to provide for sufficient cost recovery. In particular, under Market Rule 1, generators in DCAs would be permitted to submit bids up to the level of the fully allocated cost-of-service of a new combustion turbine, the ''CT Proxy'' bid. This safe harbor bid includes a fixed cost adder designed to recover the fixed costs of a new CT over the total number of hours of congestion in the DCA. However, NRG states that its units operate during far fewer hours, and if it receives only the CT Proxy price for the power it supplies, it will fail to recover its costs.[16] NRG asks the Commission to approve temporary RMR contracts for its units that would pay them their full cost-of-service until ISO–NE is able to implement locational ICAP or some other form of locational capacity requirement.

29. RMR contracts suppress market-clearing prices, increase uplift payments, and make it difficult for new generators to profitably enter the market. That is because under current market rules, generators operating under a cost-of-service RMR contract must offer power under a Stipulated Bid Cost that includes stipulated marginal, start-up and no-load costs. The units are then entitled to a monthly fixed cost payment to the extent that revenues earned from the energy market, including any payments for start-up and no-load costs, do not recover allowable capacity costs and fixed O&M costs. As a result, expensive generators under RMR contracts receive greater revenues than new entrants, who would receive lower revenues from the suppressed spot market price. In short, extensive use of RMR contracts undermines effective market performance. In addition, suppressed market clearing prices further erode the ability of other generators to earn competitive revenues in the market and increase the likelihood that additional units will also require RMR agreements to remain profitable. Therefore, we believe that ISO–NE, rather than focusing on and using stand-alone RMR agreements, should incorporate the effect of those agreements into a market-type mechanism.

30. The Commission discussed the subject of RMR agreements when ruling on the NE–SMD proposal in the September 20 Order. The order reaffirmed previous rulings that ISO–NE has the authority to enter into cost-of-service RMR agreements, the flexibility to address specific RMR situations when entering into agreements, and the requirement to file the agreements for review by the Commission.[17] In the December 20 Order the Commission added that it expects ISO–NE to enter into RMR agreements with only those units that are needed for reliability and that the Commission expects that the agreements will be in effect only for the period during which the units are needed for reliability.[18]

31. The Commission believes that RMR agreements should be a last resort and that the proliferation of these agreements is not in the best interest of the competitive market as they affect other suppliers participating in this market, especially those suppliers operating within the same DCA. Implementation of NE–SMD provides some of the needed price signals in this regard; however we believe, as many commenters in this proceeding as well as the NE–SMD proceeding have noted, a location-specific capacity requirement or a deliverability requirement is needed so that energy markets alone are not the only way for suppliers in DCAs to recover costs.[19] We believe that the current situation in NEPOOL may not allow suppliers in DCAs an adequate opportunity to recover their costs and that a location-specific capacity requirement must be in place. ISO–NE and NEPOOL need to expeditiously address the issue of resource adequacy within the DCAs as well as other transmission constraints in New England that include areas affected by export constraints as well.

32. On the basis of the foregoing discussion, we will deny the Applicants' request to recover their full cost-of-service through an RMR contract and instead: (1) Direct the recovery of only forward maintenance costs through the RMR; and (2) direct ISO–NE to modify its market power mitigation mechanism to permit selected high cost but seldom run units in DCAs to raise their bids so as to recover their fixed and variable costs through the market (a Peaking Unit Safe Harbor Bid). These temporary rules are to remain in effect until ISO–NE makes a filing and places into effect certain changes to the market prior to the 2004 summer peak season as identified below. In this regard, we have changed only the form in which the Applicant's will be able to recover their fixed and variable costs, *i.e.*, use of a safe harbor bid within the market rather than an RMR contract.

33. Upon further review of Market Rule 1, we will, pursuant to Section 206

[13] Application at fnt.6.

[14] Application at Attachment 1.

[15] Market Rule 1, Appendix A, Exhibit 4, Original Sheet Nos. 260–287. Market Rule 1 was approved by the Commission as part of the September 20 Order approving NE–SMD (100 FERC ¶ 61,287 (2002)).

[16] NRG states that the average overall capacity factor of the facilities subject to the proposed agreements is 8 percent. Filing at 5.

[17] 100 FERC ¶ 61,287 at P 50.

[18] 100 FERC ¶ 61,344 at P 33.

[19] In the September 20 Order we directed NEPOOL to develop a locational mechanism together with the other Northeastern ISOs. At that time, the assumption was that the region was pursuing a Northeastern RTO. Consequently, the Commission did not provide a date certain when it expects the mechanism to be in place, only that it be implemented in accordance with a final SMD rule.

of the Federal Power Act, 16 U.S.C. 824e, revise that Market Rule. Specifically, first, we find that Market Rule 1 shall include temporary mitigation rules to be effective June 1, 2003 that increase the safe harbor energy bids (used in the mitigation process in determining acceptable bids) to a level that includes both a variable cost component and a fixed cost adder for capacity in each DCA that had a capacity factor of 10 percent or less during 2002 (Peaking Units). The fixed cost adder for each such unit should be designed to recover the unit-specific fixed costs (adjusted downward, in the case of units covered by RMR contracts, to account for the costs recovered in the RMR contract) over the number of megawatt hours supplied in the preceding year. The safe harbor energy bids for these units would be the sum of the unit's variable cost and the adjusted fixed cost adder.

34. Our reason for increasing the safe harbor energy bids of these units is to provide a market mechanism for high cost, seldom run units to recover their fixed costs. Since ISO–NE dispatches energy in order of energy bids, capacity with a capacity factor of 10 percent or less for the year is likely to be among the most expensive energy-producing capacity in the DCA. When such capacity is called upon to produce energy, demand is likely to be pressing upon the total capacity in the DCA, and thus, higher prices are likely to be economically justified. The current CT Proxy is designed to allow a new CT to recover its fixed costs over all hours of congestion in a DCA. Units that produce energy in substantially fewer hours, such as the Applicants' units, are not likely to be able to recover all of their fixed costs under the current CT Proxy.

35. Second, we find that the Market Rule shall provide that the energy bids of peaking units are eligible to determine LMP. As a result, when a peaking unit is called, all sellers will be able to receive a high market price and recover fixed costs. This feature will encourage entry by new generators. We will direct ISO–NE to make compliance filings to reflect these changes in Market Rule 1.

36. Third, we will eliminate the current CT Proxy mechanism. Under our modified mitigation approach, energy bids above a unit's safe harbor energy bid would be subject to possible mitigation. However, since our new Peaking Unit Safe Harbor energy bid mechanism will permit higher bids and prices during the small number of hours when demand approaches total capacity, we find there is no need to permit other generators to bid up to the current CT Proxy in order to attract new investment. Moreover, permitting these other generators to bid up to the current CT Proxy could permit them to exercise market power by increasing prices when supplies are not scarce. Therefore, we will eliminate the current CT Proxy mechanism. By eliminating the current CT Proxy mechanism, we expect energy prices to be lower during periods of ample supply, when the units eligible for the higher Peaking Unit Safe Harbor energy bids are not needed.

37. Additionally, we will direct ISO–NE to file no later than March 1, 2004 for implementation no later than June 1, 2004,[20] a mechanism that implements location or deliverability requirements in the ICAP or resource adequacy market as discussed in the September 20 Order so that capacity within DCAs may be appropriately compensated for reliability.

Discussion of RMR Agreements

Changes to the Pro Forma Agreements

38. ISO–NE opposes two revisions made by the Applicants to the pro forma agreement: (1) The Reliability cost-of-service Tracker as described in section 5.1.3 and (2) the non-performance penalty, outlined in section 3.4. In both cases the ISO urges the Commission to suspend the filing to permit the parties to devise an acceptable provision through settlement discussions.

39. National Grid states that section 3.1.2 of the Applicants' proposed tariff appropriately protects against the receipt of revenues in excess of the cost-of-service and regulated return via an offset provision. However, National Grid believes that Section 3.3.2, which specifies the actual revenue crediting mechanism, references an offset of only those amounts received from the NEPOOL market. National Grid argues that the Commission should require modifications to Section 3.3.2 which make clear that it does not limit the scope of the revenue offsets provided for in Section 3.1.2.

40. NU states that the Applicants have revealed in this filing, for the first time, that they have been collecting revenue since September 2001 as part of unfiled Voluntary Mitigation Agreements (VMAs). NU argues that the Applicants should be required to divulge the exact amounts of payments, where those used to maintain plants, and whether the VMAs should be considered as offsets to the operating costs of the plants. NU also argues that the Applicants owe in excess of $10 million for station service to plants. NU asserts that permitting the Applicants to collect for station service would violate cost causation principles in the cost-of-service agreements.

41. DEMI lists several instances where provisions of the cost-of-service agreements proposed by NRG diverge from those of the pro forma cost-of-service agreements, which was approved in the NE–SMD proceeding.[21] DEMI argues that NRG neither identified nor offered an explanation or justification for these differences. DEMI submits that these changes may be unjust and unreasonable and urges the Commission to review the proposed agreements' provisions to determine if they are just and reasonable.

42. CT IEC and National Grid oppose granting Applicants the right to terminate their cost-of-service agreements. CT IEC states that this is fraught with potential for abuse in that the Applicants' units are strategically located and are important for preserving reliability. CT IEC argues that the Applicants may be tempted to exploit their position and threaten termination of the cost-of-service agreements in an effort to squeeze additional revenues from Connecticut load.

43. NSTAR and DEMI argue that section 6.2 of the pro forma cost-of-service agreements provides for ISO–NE discretionary termination if a force majeure event continues in excess of thirty days whereas the cost-of-service agreements proposed by the Applicants have no such provision.

44. National Grid states that Section 2.2.3 of the Applicants' proposed cost-of-service agreements—which is not contained in the pro forma agreement—permits the Applicants to terminate the

[20] This date coincides with the start of the Capability Year for assigning UCAP requirements to NEPOOL participants.

[21] Section 2.5 of the cost-of-service agreements acknowledges that the unit owner, its agent and certain affiliates may file a petition under Chapter 11 of the Bankruptcy Code during the term of the cost-of-service agreements and specifies certain provisions that would apply in the event that such a petition is filed.

1. Section 3.1.2 of the cost-of-service agreements amends the pro forma RMR agreement's treatment of installed capacity (ICAP) revenue credits and instead specifies price levels for certain time periods in lieu of the pro forma contract's requirement that all ICAP revenues be offset against payments to the resource under the agreements.

2. Section 3.2.2 of the cost-of-service agreements amends the pro forma agreement's definition of Fuel Index Price, which is a component of the Stipulated Bid cost-of-service, by allowing NRG and ISO–NE to renegotiate the Fuel Index Price if either party believes the Fuel Index Price calculated by ISO–NE does not accurately reflect NRG's actual cost of fuel.

3. Certain provisions of the cost-of-service agreements depart from the pro forma by allowing NRG to substitute performance by one unit when another unit is unable to perform, see section 5.2.2(b), and, in certain circumstances, to recover from the ISO the costs of bringing a substitute unit into service, see section 5.2.2(e).

cost-of-service agreement, subject to consent of ISO–NE. National Grid argues that the proposed agreements offer no specific terms or conditions as to when the agreements may be terminated and no justification for departure from the pro forma agreement. National Grid believes that this appears to enable the Applicants to terminate the agreements when they so desire.

45. NE COE protests the absence of a provision preventing Applicants from delisting a resource. NE COE states that under Market Rule 1, generators are permitted to delist a resource from the day-ahead and real-time markets, which a generator typically undertakes to be able to sell in New York markets. NE COE argues that generators receiving support under cost-of-service agreements should not be permitted to remove the relevant facilities in seeking sales outside of New England. Moreover, NE COE submits that the Applicants' units are needed to meet reliability and thus there is no reason to permit Applicants to delist.

Cost-of-Service Tracker

46. Numerous intervenors express opposition to the Applicants' proposed section 5.1.3, entitled Reliability Projects that is not included in the pro forma agreement. This Section provides a cost tracking provision to compensate the Applicants for the costs of specifically identified Reliability Projects to ensure that the Applicants complete this needed maintenance in order to keep the facilities in operation so that they are available when called upon by the ISO. Generally speaking, intervenors do not oppose the theory behind the tracker. However, many parties object to the lack of oversight, which, if in place, could ensure that the funds are spent on the intended maintenance and will also serve to protect the funds collected by ISO–NE in the event of an NRG bankruptcy petition. DEMI opposes the absence of prior review or approval of the costs; CT DPUC and NU urge the Commission to direct that funds be placed in escrow; CT IEC states that there are no measures to ensure funds will be dedicated to necessary expenditures; and National Grid argues that costs flowing through the tracker should be identified and that the tracker mechanism should be modified to limit the Applicants to recovery of an amortized portion of any multi-year maintenance or capital investment. NEPOOL, while not taking a formal position on the proposed reliability agreements, asks the Commission to carefully consider the implications of a potential bankruptcy filing by one or more of the applicants on the advance payment provisions for the major maintenance expenses.

Commission Response

47. The Commission addressed the cost-of-service tracking mechanism for Reliability Projects in the March 25 Order. The units under the proposed RMR agreements are needed this year for reliability. They need to undergo maintenance in order to operate, and NRG may not be able to raise the funds to pay for maintenance costs without an assured revenue source, such as would be provided by an RMR contract. However, it appears that these units do not need to be guaranteed their full cost-of-service to remain in operation. The cost-of-service tracking provisions contained in section 5 of these agreements assures payment only of going forward maintenance costs. This is a provision that may not be applicable to all RMR agreements; however, we consider it applicable here because the Applicants may not otherwise be in a financial position to fund maintenance in advance of revenue. The escrow modification we ordered in the March 25 Order will alleviate concerns that the funds collected from participants are used for maintaining these units. While we deny the remainder of the RMR agreements, this provision will ensure the units are maintained and operational. Because the bid ceiling discussed above would provide the units with an opportunity to recover their fixed costs, we direct ISO–NE and the Applicants to modify the agreements so that the amounts paid by NEPOOL participants in accordance with section 5, Reliability Projects will be credited against the fixed cost-of-service portion of the new reference price bid ceiling.

Delivery Standard

48. Several intervenors take issue with NRG's proposal to reduce the delivery standard according to section 3.4.2 of the proposed cost-of-service agreements.[22] ISO–NE indicates that it cannot accept the proposed standard absent empirical evidence that such a revision is appropriate.[23] NU submits that ratepayers should not be required to pay for RMR service if they receive a diminished reliability benefit and further suggests considering a reduction of the Applicants cost-of-service recovery if they cannot meet the ISO–NE designated performance standards. CT OCC asserts that NRG's request is completely inappropriate especially in the context of the company's rather high cost-of-service recovery requests. CT IEC concludes that NRG hopes to secure the most amount of money for the least amount of output based on NRG's statement that the facilities may not be able to meet the reduced performance standard. CT IEC argues that in order to ensure reliability in Connecticut, which is the goal of cost-of-service agreements, the Applicants' generating units must meet their performance goals and any failure to do so must be strictly penalized. NSTAR argues that the Applicants must not be allowed to undermine ISO–NE's need to know what it can count on and when in a constrained dispatch. NEPOOL, without taking a formal position, asks the Commission to carefully consider the deviation from the pro-forma agreement with regard to the diminished performance standard.

Commission Response

49. The Commission is not convinced by the Applicants' statements that the non-performance penalty standards contained in section 3.4.2 of the agreements need to be changed from the pro-forma agreements. We therefore deny this change.

Cost-of-Service

50. ISO–NE has not reviewed rate-related information and states that it does not take any position on the appropriateness of rates requested by the Applicants. However, ISO–NE does confirm that the units specified ''are necessary to support reliability in Connecticut and [the ISO] is prepared to execute cost-of-service agreements with the Applicants.'' [24] Further, the ISO is prepared to ''execute the Agreements in substantially the same from as they have been submitted,'' subject to any changes ordered by the Commission.[25]

51. Numerous intervenors—DEMI, NU, CT CPUC, CT IEC, CTAG, NSTAR and CT OCC—believe NRG's proposed rates exceed the bounds of ''just and reasonable'' ratemaking and call for suspending the filing and setting it for hearing. Intervenors also address specific items of NRG's filed cost-of-service including the proposed return

[22] Section 3.4.2 of the Applicants proposed cost-of-service agreements states that a unit shall be deemed to be in full compliance if the unit delivers in any hour at least 95% of the requested MW or not more than 5 MW less than the requested MW. The pro forma cost-of-service agreement, provides for at least 97% and not more than 2 MW less than the requested MW.

[23] ISO–NE states that necessary evidence has not been provided and supports the 97% or not less than 2 MW standard required in the pro forma agreement in Market Rule 1.

[24] Comments of ISO–NE at 3.

[25] The Commission notes that the ISO–NE raises concerns regarding the deviations from the pro-forma RMR agreement that the applicants proposed in the filing—the Cost Tracking mechanism and the reduction in the performance standard.

on equity of 14 percent, cost of capital (NRG proposes 9.05 percent cost of credit), accumulated deferred income taxes, depreciation (NRG uses 6.6 years to calculate accumulated depreciation), net negative salvage value (NRG has increased its depreciation base by $92,420,000), operations and maintenance expenses, interconnection rights, and recovery of an acquisition premium.

Commission Response

52. Applicants filed proposed rates to recover the costs of all subject generating units in each power plant, *i.e.*, separate rates for Devon, Middletown, Montville, and Norwalk. Under this approach all of the units under each RMR Agreement would have received the same rate regardless of which unit(s) run at the plant. The rejection of the agreements and the Commission's changes to the mitigation rules discussed above renders as moot the cost-of-service analysis for the original intended purpose of developing specified rates for the recovery of fixed and variable costs of each plant. Under the Commission's directive, a Peaking Unit Safe Harbor bid ceiling with a fixed cost adder will need to be developed for each unit or plant to replace the CT Proxy for these peaking units based on the amount of generation produced during the previous year, *i.e.* 2002. The cost-of-service analyses filed by the Applicants will therefore need to serve as the basis for the determination of the Peaking Unit Safe Harbor.

53. Interveners have raised several issues regarding the cost-of-service analysis including rate of return, depreciation rates, and accumulated deferred income taxes (ADIT). In addition, the Commission performed a cost-of-service analysis for each Agreement based on the information provided in the filing. The Commission identified several cost-of-service items that were not fully supported by the Applicants in their filing and made adjustments as follows: A return on equity of 13.39% (based on Commission Staff's preliminary analysis), the addition of ADIT, and the elimination of net negative salvage and associated depreciation expenses. The Commission's analysis supports fixed charges of: $21,154,792 for the Devon units; $17,687,684 for the Norwalk Harbor units; $19,327,732 for the Montville units; and $45,262,975 for the Middletown units. These values, subject to adjustment for all revenues received from other sources, are to be used to develop fixed cost adder and the initial Peaking Unit Safe Harbor bid ceilings for these units.

54. Issues that are driving how the Commission will deal with the filed costs-of-service include: The need for intervenors to comment; the need for the Peaking Unit Safe Harbor to be implemented in short order; and the inability to order refunds because of the interaction between Peaking Unit Safe Harbor and the market price of electricity. The safe harbor bids by definition are approximations; and therefore, the Commission will provide an avenue for intervenors to comment in order to accommodate the above driving factors. The Commission will allow the costs-of-service with the adjustments discussed above to serve as the basis for developing initial Peaking Unit Safe Harbor to be placed into effect with the market mitigation measures described above. We will allow parties to comment specifically about the costs-of-service as they pertain to the development of the Peaking Unit Safe Harbor bid levels as well as to allow the Applicants to comment on and to support the items that the Commission adjusted in developing the above fixed charges within 30 days. The Commission will set an expedited timetable for the resolution of any issues. Changes to the costs-of-service resulting from this process will be reflected in recalculated reference prices that will go into effect on a going forward basis from the date of an order that establishes revised Peaking Unit Safe Harbor levels.

The Commission orders:

(A) The proposed agreements are hereby accepted for filing, as revised as directed in ordering paragraph B below, suspended to become effective February 27, 2003, subject to refund and the escrow arrangements consistent with the March 25 Order.

(B) Applicants are hereby directed to file revised agreements within 30 days of the date of this order, that provide only for the recovery of costs related to the Reliability Projects as discussed in the body of this order.

(C) ISO–NE is hereby directed on or before May 30, 2003, to make a compliance filing to revise the Proxy CT mitigation measures contained in Market Rule 1 and to develop Peaking Unit Safe Harbor bid ceilings as discussed in the body of this order.

(D) ISO–NE and NEPOOL are directed to file revised ICAP rules no later than March 1, 2004, as discussed in the body of this order.

(E) The Secretary is hereby directed to publish a copy of the order in the **Federal Register**.

By the Commission.

Magalie R. Salas,

Secretary.

[FR Doc. 03–10816 Filed 5–1–03; 8:45 am]

BILLING CODE 6717–01–P

ENVIRONMENTAL PROTECTION AGENCY

[OPPT–2002–0048; FRL–7492–4]

Agency Information Collection Activities; Submission of EPA ICR No. 0795.11 (OMB No. 2070–0030) to OMB for Review and Approval; Comment Request

AGENCY: Environmental Protection Agency (EPA).

ACTION: Notice.

SUMMARY: In compliance with the Paperwork Reduction Act (44 U.S.C. 3501 *et seq.*), this document announces that the following Information Collection Request (ICR) has been forwarded to the Office of Management and Budget (OMB) for review and approval: Notification of Chemical Exports—TSCA Section 12(b) (EPA ICR No. 0795.11; OMB Control No. 2070–0030). The ICR, which is abstracted below, describes the nature of the information collection and its estimated cost and burden. On August 19, 2002 (67 FR 53792), EPA sought comments on this ICR pursuant to 5 CFR 1320.8(d). EPA received comments from Kokopelli Chemists, Inc.; the Proctor & Gamble Co.; the Color Pigments Manufacturers Association, Inc.; and the American Chemistry Council, which are addressed as an attachment to the ICR.

DATES: Additional comments may be submitted on or before June 2, 2003.

ADDRESSES: Submit your comments, identified by docket ID number OPPT–2002–0048, to both (1) EPA online at *http://www.epa.gov/edocket* (our preferred method) or by mail to: EPA Docket Center, Environmental Protection Agency, Mailcode: 7407T, 1200 Pennsylvania Ave., NW., Washington, DC 20460, and (2) OMB at: Office of Information and Regulatory Affairs, Office of Management and Budget (OMB), Attention: Desk Officer for EPA, 725 17th Street, NW., Washington, DC 20503.

FOR FURTHER INFORMATION CONTACT: Barbara Cunningham, Director, Environmental Assistance Division, Office of Pollution Prevention and Toxics, Environmental Protection Agency, Mailcode: 7408, 1200 Pennsylvania Ave., NW., Washington, DC 20460; telephone number: 202–554–

1404; e-mail address: *TSCA–Hotline@epa.gov*.

SUPPLEMENTARY INFORMATION: EPA has submitted the following ICR to OMB for review and approval according to the procedures prescribed in 5 CFR 1320.12.

EPA has established a public docket for this ICR under Docket ID No. OPPT–2002–0048, which is available for public viewing at the OPPT Docket in the EPA Docket Center, EPA West Building Basement Room B102, 1301 Constitution Ave., NW., Washington, DC. The Center is open from 8 a.m. to 4:30 p.m., Monday through Friday, excluding legal holidays. The telephone number for the Reading Room is (202) 566–1744.

An electronic version of the public docket is available through EPA's electronic public docket and comment system, EPA Dockets (EDOCKET) at *http://www.epa.gov/edocket*. Use EDOCKET to submit or view public comments, access the index listing of the contents of the public docket, and to access those documents in the public docket that are available electronically. Once in the system, select ''search,'' then key in the docket ID number identified above. Any comments related to this ICR should be submitted to EPA and OMB within 30 days of this notice.

EPA's policy is that public comments, whether submitted electronically or in paper, will be made available for public viewing in EDOCKET as EPA receives them and without change, unless the comment contains copyrighted material, CBI, or other information whose public disclosure is restricted by statute. When EPA identifies a comment containing copyrighted material, EPA will provide a reference to that material in the version of the comment that is placed in EDOCKET. The entire printed comment, including the copyrighted material, will be available in the public docket. Although identified as an item in the official docket, information claimed as CBI, or whose disclosure is otherwise restricted by statute, is not included in the official public docket, and will not be available for public viewing in EDOCKET.

Title: Notification of Chemical Exports—TSCA Section 12(b) (EPA ICR No. 0795.11; OMB Control No. 2070–0030). This is a request to renew an approved collection that is scheduled to expire on April 30, 2003. Under the OMB regulations, the Agency may continue to conduct or sponsor the collection of information while this submission is pending at OMB.

Abstract: Section 12(b)(2) of the Toxic Substances Control Act (TSCA) requires that any person who exports or intends to export to a foreign country a chemical substance or mixture that is regulated under TSCA sections 4, 5, 6 and/or 7 submit to EPA notification of such export or intent to export. Upon receipt of notification, EPA will advise the government of the importing country of the U.S. regulatory action with respect to that substance. EPA uses the information obtained from the submitter via this collection to advise the government of the importing country.

Responses to the collection of information are mandatory (see 40 CFR part 707). Respondents may claim all or part of a document confidential. EPA will disclose information that is covered by a claim of confidentiality only to the extent permitted by, and in accordance with, the procedures in TSCA section 14 and 40 CFR part 2.

An agency may not conduct or sponsor, and a person is not required to respond to, a collection of information unless it displays a currently valid OMB control number, unless that collection is specifically mandated by statute. The OMB control numbers for EPA's regulations in Title 40 are listed in 40 CFR part 9, and are identified on the form and/or instrument, if applicable.

Burden Statement: The annual public reporting burden for this collection of information is estimated to be about one hour per response. Under the PRA, burden means the total time, effort or financial resources expended by persons to generate, maintain, retain or disclose or provide information to or for a Federal agency. This includes the time needed to review instructions; develop, acquire, install and utilize technology and systems for the purposes of collecting, validating and verifying information, processing and maintaining information, and disclosing and providing information; adjust the existing ways to comply with any previously applicable instructions and requirements; train personnel to be able to respond to a collection of information; search data sources; complete and review the collection of information; and transmit or otherwise disclose the information.

Respondents/Affected Entities: Companies that export from the United States to foreign countries, or that engage in wholesale sales of, chemical substances or mixtures.

Frequency of Collection: On occasion, either once or annually.

Estimated No. of Respondents: 500.

Estimated Total Annual Burden on Respondents: 7,450 hours.

Estimated Total Annual Costs: $452,055.

Changes in Burden Estimates: There is a decrease of 2,950 hours (from 10,400 hours to 7,450 hours) in the total estimated respondent burden compared with that identified in the information collection request most recently approved by OMB. This change reflects EPA's experience over the past three years, in which there has been an increase in the number of reporting firms but a decrease in the number of notices per firm than anticipated at the time of the last approval of this information collection. The net result is a decrease in burden hours (adjustment).

Dated: April 23, 2003.

Richard T. Westlund,

Acting Director, Collection Strategies Division.

[FR Doc. 03–10895 Filed 5–1–03; 8:45 am]

BILLING CODE 6560–50–P

ENVIRONMENTAL PROTECTION AGENCY

[OPPT–2002–0035; FRL–7492–3]

Agency Information Collection Activities; Submission of EPA ICR No. 0794.10 (OMB No. 2070–0046) to OMB for Review and Approval; Comment Request

AGENCY: Environmental Protection Agency (EPA).

ACTION: Notice.

SUMMARY: In compliance with the Paperwork Reduction Act (44 U.S.C. 3501 *et seq.*), this document announces that the following Information Collection Request (ICR) has been forwarded to the Office of Management and Budget (OMB) for review and approval: Notification of Substantial Risk of Injury to Health and the Environment under TSCA Section 8(e) (EPA ICR No. 0794.10; OMB Control No. 2070–0046). The ICR, which is abstracted below, describes the nature of the information collection and its estimated burden and cost. On August 22, 2002 (67 FR 54416), EPA sought comments on this ICR pursuant to 5 CFR 1320.8(d). EPA received two comments, and addressed the comments received as an attachment to the ICR.

DATES: Additional comments may be submitted on or before June 2, 2003.

ADDRESSES: Submit your comments, identified by docket ID number OPPT–2002–0035, to both (1) EPA online at *http://www.epa.gov/edocket* (our preferred method) or by mail to: EPA Docket Center, Environmental Protection Agency, Mailcode: 7407T, 1200 Pennsylvania Ave., NW., Washington, DC 20460, and (2) OMB at: Office of Information and Regulatory

Affairs, Office of Management and Budget (OMB), Attention: Desk Officer for EPA, 725 17th Street, NW., Washington, DC 20503.

FOR FURTHER INFORMATION CONTACT: Barbara Cunningham, Acting Director, Environmental Assistance Division, Office of Pollution Prevention and Toxics, Environmental Protection Agency, Mailcode: 7408, 1200 Pennsylvania Ave., NW., Washington, DC 20460; telephone number: 202–554–1404; e-mail address: *TSCA-Hotline@epa.gov.*

SUPPLEMENTARY INFORMATION: EPA has submitted the following ICR to OMB for review and approval according to the procedures prescribed in 5 CFR 1320.12.

EPA has established a public docket for this ICR under Docket ID No. OPPT–2002–0035, which is available for public viewing at the Pollution Prevention and Toxics Docket in the EPA Docket Center (EPA/DC), EPA West, Room B102, 1301 Constitution Ave., NW., Washington, DC. The EPA Docket Center Public Reading Room is open from 8:30 a.m. to 4:30 p.m., Monday through Friday, excluding legal holidays. The telephone number for the Reading Room is (202) 566–1744, and the telephone number for the Pollution Prevention and Toxics Docket is (202) 566–0280. An electronic version of the public docket is available through EPA Dockets (EDOCKET) at *http://www.epa.gov/edocket.* Use EDOCKET to submit or view public comments, access the index listing of the contents of the public docket, and to access those documents in the public docket that are available electronically. Once in the system, select ''search,'' then key in the docket ID number identified above. Any comments related to this ICR should be submitted to EPA and OMB within 30 days of this notice.

EPA's policy is that public comments, whether submitted electronically or in paper, will be made available for public viewing in EDOCKET as EPA receives them and without change, unless the comment contains copyrighted material, CBI, or other information whose public disclosure is restricted by statute. When EPA identifies a comment containing copyrighted material, EPA will provide a reference to that material in the version of the comment that is placed in EDOCKET. The entire printed comment, including the copyrighted material, will be available in the public docket. Although identified as an item in the official docket, information claimed as CBI, or whose disclosure is otherwise restricted by statute, is not included in the official public docket, and will not be available for public viewing in EDOCKET.

Title: Notification of Substantial Risk of Injury to Health and the Environment under TSCA Section 8(e) (EPA ICR No. 0794.10; OMB Control No. 2070–0046). This is a request to renew an approved collection that is currently scheduled to expire on April 30, 2003. Under the OMB regulations, the Agency may continue to conduct or sponsor the collection of information while this submission is pending at OMB.

Abstract: TSCA section 8(e) requires that any person who manufactures, imports, processes or distributes in commerce a chemical substance or mixture and which obtains information that reasonably supports the conclusion that such substance or mixture presents a substantial risk of injury to health or the environment must immediately inform EPA of such information. EPA routinely disseminates TSCA section 8(e) data it receives to other Federal agencies to provide information about newly discovered chemical hazards and risks.

Responses to the collection of information are mandatory (see 15 U.S.C. 2607(e)). Respondents may claim all or part of a notice confidential. EPA will disclose information that is covered by a claim of confidentiality only to the extent permitted by, and in accordance with, the procedures in TSCA section 14 and 40 CFR part 2.

An agency may not conduct or sponsor, and a person is not required to respond to, a collection of information unless it displays a currently valid OMB control number. The OMB control numbers for EPA's regulations in title 40 of the CFR, after appearing in the **Federal Register**, are listed in 40 CFR part 9 and included on the related collection instrument or form, if applicable.

Burden Statement: The annual public reporting burden for this collection of information is estimated to range between 5 hours and 27 hours per response, depending upon the nature of the response. Under the PRA, burden means the total time, effort or financial resources expended by persons to generate, maintain, retain or disclose or provide information to or for a Federal agency. This includes the time needed to review instructions; develop, acquire, install and utilize technology and systems for the purposes of collecting, validating and verifying information, processing and maintaining information, and disclosing and providing information; adjust the existing ways to comply with any previously applicable instructions and requirements; train personnel to be able to respond to a collection of information; search data sources; complete and review the collection of information; and transmit or otherwise disclose the information.

Respondents/Affected Entities: Companies that manufacture, import, process or distribute in commerce chemical substances or mixtures and that obtain information that reasonably supports the conclusion that such substance or mixture presents a substantial risk of injury to health or the environment.

Frequency of Collection: On occasion.

Estimated No. of Respondents: 218.

Estimated Total Annual Burden on Respondents: 6,431 hours.

Estimated Total Annual Costs: $678,525.

Changes in Burden Estimates: There is a decrease of 1,778 hours (from 8,209 hours to 6,431 hours) in the total estimated respondent burden compared with that identified in the information collection request most recently approved by OMB. This change results from an overall decrease in section 8(e) reporting, primarily from a reduction in the number of follow-up/supplemental section 8(e) notices received. In previous ICR renewals, EPA used an historical average of 2.2 follow-up notices per each initial submission. This figure was based on EPA's experience and system for reviewing section 8(e) notices in place pre-1990. During that time EPA received fewer than 100 initial notices per year and was able to perform a much more detailed review of each notice received. The consequence of that review was that there was much more interaction with the submitting companies generating numerous follow-up notices and information submissions. However, during and since the 1991 Compliance Audit Program, because of the increase in initial notices submitted, EPA has contacted submitters for additional information only for those initial notices that are identified during the preliminary screening evaluation as needing additional information from the submitters. Consequently, the number of follow-up notices has fallen due to the changed nature of EPA's review of initial notices. Over the last three fiscal years, EPA has received 341 follow-up notices versus 653 initial notices, or approximately 0.5 follow-up notices per initial notice (adjustment). In addition, EPA has separately identified mailing costs for the first time in this ICR, *i.e.*, mailing costs of $10 per 327 submissions, or $3,270, which are included in the total costs identified above (adjustment).

Dated: April 23, 2003.

Richard T. Westlund,

Acting Director, Collection Strategies Division.

[FR Doc. 03–10896 Filed 5–1–03; 8:45 am]

BILLING CODE 6560–50–P

ENVIRONMENTAL PROTECTION AGENCY

[FRL–7492–8]

Proposed Consent Decree, Clean Air Act Citizen Suit

AGENCY: Environmental Protection Agency.

ACTION: Notice of proposed Consent Decree; request for public comment.

SUMMARY: In accordance with section 113(g) of the Clean Air Act, as amended (''Act''), 42 U.S.C. 7413(g), notice is hereby given of a proposed Consent Decree. On April 17, 2003, Our Children's Earth Foundation filed a complaint pursuant to section 304(a) of the Act, 42 U.S.C. 7604(a), alleging the Environmental Protection Agency (''EPA'') failed to meet its mandatory duty to ''assemble and publish a comprehensive document for each State setting forth all of the requirements of the applicable implementation plan for such State.'' *Our Children's Earth Foundation* v. *EPA,* No. C03–1705 (N.D. CA). On April 17, 2003, EPA lodged a draft Consent Decree with the United States District Court for the Northern District of California and is seeking through this notice comment on whether to enter into the Consent Decree. The Consent Decree establishes time frames for nine EPA Regional Offices to make federally approved state clean air plans accessible via the worldwide web.

DATES: Written comments on the proposed Consent Decree must be received by June 2, 2003.

ADDRESSES: Written comments should be sent to Jan M. Tierney, Air and Radiation Law Office (2344A), Office of General Counsel, U.S. Environmental Protection Agency, 1200 Pennsylvania Ave., NW., Washington, DC 20460. Copies of the proposed Consent Decree are available from Phyllis J. Cochran,(202) 564–5566. On April 17, 2003, a copy of the proposed Consent Decree was lodged with the Clerk of the United States District Court for the Northern District of California.

SUPPLEMENTARY INFORMATION: Our Children's Earth Foundation (''OCEF'') alleges that nine EPA Regional Offices failed to meet the obligation under section 110(h) of the Clean Air Act to ''assemble and publish a comprehensive document for each State setting forth all of the requirements of the applicable implementation plan for such State.''

Numerous provisions in the Clean Air Act require States to submit state implementation plans (''SIPs'') specifying specify how areas within the State will attain (*i.e.*, meet) and maintain (*i.e.*, ensure continued compliance with) federal air quality standards. SIPs include state regulations that establish enforceable obligations on different sources of pollution, such as stationary industrial sources, to limit emissions of pollutants into the air. In addition, the SIP may include modeling or other plans (''SIP Plans'') demonstrating how these state regulatory controls, in conjunction with federal programs, will bring and/or keep air quality in compliance with federal air quality standards. OCEF alleges that five EPA Regional Offices—Regions 1, 2, 3, 8 and 10—have not met the section 110(h) obligation with respect to SIP rules. OCEF alleges that nine EPA Regional Offices—Regions 1, 2, 3, 4, 5, 6, 7, 8, and 10—have not met the section 110(h) obligation with respect to SIP Plans.

The Consent Decree provides schedules by which Regions 1, 2, 3, 8, and 10 will make web accessible SIP rules for each state within the Region. In addition, for the nine Regions, the Consent Decree provides schedules by which each Region will make summaries of SIP Plans web accessible.

For a period of thirty (30) days following the date of publication of this notice, the Agency will receive written comments relating to the proposed Consent Decree from persons who were not named as parties or interveners to the litigation in question. EPA or the Department of Justice may withdraw or withhold consent to the proposed Consent Decree if the comments disclose facts or considerations that indicate that such consent is inappropriate, improper, inadequate, or inconsistent with the requirements of the Act. Unless EPA or the Department of Justice determine, following the comment period, that consent is inappropriate, the Consent Decree will be final.

Dated: April 28, 2003.

Lisa Friedman

Associate General Counsel.

[FR Doc. 03–10894 Filed 5–1–03; 8:45 am]

BILLING CODE 6560–50–P

ENVIRONMENTAL PROTECTION AGENCY

[ER–FRL–6639–8]

Environmental Impact Statements; Notice of Availability

Responsible Agency: Office of Federal Activities, General Information (202) 564–7167 or *http://www.epa.gov/compliance/nepa/.*

Weekly receipt of Environmental Impact Statements

Filed April 21, 2003, through April 25, 2003.

Pursuant to 40 CFR 1506.9.

EIS No. 030183, Final EIS, AFS, UT, Uinta National Forest Revised Land and Resource Management Plan, Implementation, Juab, Sanpete, Tooele, Utah and Wasatch Counties, UT, Wait Period Ends: June 2, 2003, Contact: Marlene DePietro (801) 342–5161.

EIS No. 030184, Draft EIS, AFS, AZ, Cross-County Travel by Off-Highway Vehicle Project, To Restrict Motorized, Wheeled Cross-County Travel, Apache-Sitegreaves, Conino, Kaibab, Prescott and Tonto National Forests, AZ, Comment Period Ends: June 16, 2003, Contact: Jim Anderson (928) 333–6370. This document is available on the Internet at: *http://(www.fs.fed.us/r3/ohv).*

EIS No. 030185, Final Supplement, AFS, ID, Salmon Wild and Scenic River Management Plan, Timeline Change From December 31, 2002 to December 31, 2005 and Clarification of Economic Impacts on the Campes, Stub Creek, Arctic Creek and Smith Gulch Creek, Salmon National Forest, Salmon County, ID, Wait Period Ends: June 2, 2003, Contact: Patricia Pearson (208) 756–5148.

EIS No. 030186, Final EIS, AFS, WI, Northwest Howell Project, Timber Harvest, Wildlife Openings Maintenance, Aspen and Jack Pine Types Regeneration, Hardwood and Conifer Tree Seedlings Protection, Lakes Habitat Improvements and Transportation System Development, Eagle-Florence District, Chequameg-Nicolet National Forest, Forest and Florence Counties, WI, Wait Period Ends: June 2, 2003, Contact: Shirley Frank (715) 528–4464 Ext. 27.

EIS No. 030187, Draft EIS, FHW, MO, Missouri River Corridor, Widening and Improvements a New Four Lane Expressway, Corridor consist of Four Segments: Front Street, Chouteau Trafficway, South Riverfront Expressway (SRE) and Little Blue Expressway (LBE), Jackson and Clay Counties, MO, Comment Period Ends:

June 16, 2003, Contact: Allen Masuda (573) 636–7104.

EIS No. 030188, Final EIS, SFW, CA, Natomas Basin Habitat Conservation Plan, Issuance of Incidental Take Permit and the Adoption of an Implementing Agreement or Agreements, Natomas Basin, Sacramento and Sutter Counties, CA, Wait Period Ends: June 2, 2003, Contact: Cay Goude (916) 414–6600.

EIS No. 030189, Draft EIS, BLM, WY, Desolation Flats Natural Gas Field Development Project, Drilling Additional Development Wells, Carbon and Sweetwater County, WY, Comment Period Ends: July 1, 2003, Contact: John Spehar (307) 328–4264. This document is available on the Internet at: *http://www.blm.gov/nepa.*

EIS No. 030190, Final EIS, JUS, CA, Juvenile Justice Facility and East County Hall of Justice, Proposal to Evaluate two Projects that could be Constructed at one (Combined Siting) or (Separate Siting), Alamenda County, CA, Wait Period Ends: June 2, 2003, Contact: Paul Delameter (202) 514–7903.

EIS No. 030191, Draft EIS, FHW, LA, I–49 South Lafayette Regional Airport to LA–88 Route US–90 Project, Upgrading Existing US–90 from the Lafayette Regional Airport to LA–88, Iberia, Lafayette and St. Martin Parishes, LA, Comment Period Ends: June 16, 2003, Contact: William C. Farr (225) 757–7615.

EIS No. 030192, Draft EIS, COE, CA, Napa River Salt Marsh Restoration Project, Proposing a Salinity Reduction and Habitat Restoration for Napa River Unit, San Pablo Bay, Napa and Solano Counties, CA, Comment Period Ends: June 16, 2003, Contact: Shirin Tolle (415) 977–8467.

Amended Notices

EIS No. 030078, Draft EIS, NPS, AK, Denali National Park and Preserve Backcountry Management Plan and General Management Plan Amendment, Implementation, AK, Comment Period Ends: May 30, 2003, Contact: Mike Tranel (907) 257–2562. Revision of FR Notice Published on 3/7/2003: CEQ Comment Period Ending on 5/7/2003 has been Extended to 5/30/2003.

EIS No. 030115, Draft EIS, FRC, CA, Pit 3, 4, 5 Hydroelectric Project, (FERC No. 233–081), Application for New License, Pit River, Shasta-Trinity National Forest, Shasta County, CA Comment Period Ends: May 21, 2003, Contact: John Mudre (202) 502–8902. Revision of FR Notice Published on 3/21/2003: CEQ Comment Period Ending 5/5/2003 has been Corrected to 05/21/2003.

EIS No. 030116, Draft EIS, COE, CA, Lower Cache Creek Flood Damage Reduction Project, Implementation, City of Woodland and Vicinity, Yolo County, CA, Comment Period Ends: June 4, 2003, Contact: Patti Johnson (916) 557–6611. Revision of FR Notice Published on 3/21/2003: CEQ Comment Period Ending 5/05/2003 has been Extended to 6/4/2003.

EIS No. 030141, Draft EIS, COE, TX, Gulf Intracoastal Waterway in the Laguna Madre, Maintenance Dredging from the JFK Causeway to the Old Queen Isabella Causeway, Nueces, Kleberg, Kenedy, Willacy and Cameron County, TX, Comment Period Ends: June 19, 2003, Contact: Dr. Terry Roberts (409) 766–3035. Revision of FR Notice Published on 4/4/2003: CEQ Comment Period Ending 5/19/2003 has been Extended to 6/19/2003.

Dated: April 30, 2003.

Joseph C. Montgomery,

Director, NEPA Compliance Division, Office of Federal Activities.

[FR Doc. 03–10897 Filed 5–1–03; 8:45 am]

BILLING CODE 6560–60–P

ENVIRONMENTAL PROTECTION AGENCY

[FRL–7492–2]

Environmental Laboratory Advisory Board (ELAB) Meeting Dates and Agenda

AGENCY: Environmental Protection Agency (EPA).

ACTION: Notice of teleconference meeting.

SUMMARY: The Environmental Protection Agency's Environmental Laboratory Advisory Board (ELAB) will have teleconference meetings on April 23, 2003 at 11 a.m. edt; May 6, 2003 at 11 a.m. edt; May 14, 2003 at 11 a.m. edt; May 20, 2003 at 11 a.m. edt; and May 28, 2003 at 11 a.m. edt in addition to a Face-to-Face Meeting on June 6, 2003 at 8:30 a.m. edt to discuss the ideas and views presented at the previous ELAB meetings, as well as new business. Items to be discussed include: (1) ELAB Charter; (2) funding and budget proposal to EPA for NELAC; (3) assessment of current state of assessor training; (4) follow-up on draft language on ELAB's past recommendations on EPA reference methods; and (5) draft recommendation on implementation of national accreditation program. Written comments on NELAP laboratory accreditation and the NELAC standards are encouraged and should be sent to Ms. Lara P. Autry, DFO, U.S. EPA (E243–05), 4930 Old Page Road, Research Triangle Park, NC 27709, faxed to (919) 541–4261, or e-mailed to *autry.lara@epa.gov.* Members of the public are invited to listen to the teleconference calls or attend the face-to-face meeting, and time permitting, will be allowed to comment on issues discussed during this and previous ELAB meetings. Those persons interested in attending should call Lara P. Autry at (919) 541–5544 to obtain teleconference information or logistics regarding the hotel for the face-to-face meeting. The number of lines for the teleconferences, however, are limited and will be distributed on a first come, first serve basis. Preference will be given to a group wishing to attend over a request from an individual.

John G. Lyon,

Director, Environmental Sciences Division, National Environmental Research Laboratory.

[FR Doc. 03–10892 Filed 5–1–03; 8:45 am]

BILLING CODE 6560–50–P

ENVIRONMENTAL PROTECTION AGENCY

[FRL–7479–8]

Guidelines on Awarding Section 319 Grants to Indian Tribes in FY 2003

AGENCY: Environmental Protection Agency (EPA).

ACTION: Notice of availability.

SUMMARY: EPA has developed guidelines for awarding Clean Water Act section 319 nonpoint source grants to Indian tribes in FY 2003. As has been the case for the past three fiscal years, Congress has authorized EPA to award nonpoint source pollution control grants to Indian tribes under section 319 of the Clean Water Act in FY 2003 in an amount that exceeds the statutory cap (in section 518(f) of the Clean Water Act) of ⅓ percent of the total section 319 appropriation. These guidelines are intended to assist all tribes that have approved nonpoint source assessments and management programs and also have ''treatment-as-a-state'' status to receive section 319 funding to help implement those programs. The guidelines describe the process for awarding base funding to tribes in FY 2003, including submissions of proposed work plans. The guidelines also describe the process and schedule to award additional funds for selected watershed projects for FY 2003 funding, including submissions of watershed

project summaries and the selection criteria for funding watershed projects.

DATES: The guidelines are effective May 2, 2003.

ADDRESSES: Persons requesting additional information or a complete copy of the document should contact Ed Drabkowski at (202) 566–1198; *drabkowski.ed@epa.gov;* or U.S. Environmental Protection Agency (4503T), 1200 Pennsylvania Avenue, NW., Washington, DC 20460.

FOR FURTHER INFORMATION CONTACT: Persons requesting additional information or complete copy of the document should contact Ed Drabkowski at (202) 566–1198; *drabkowski.ed@epa.gov;* or U.S. Environmental Protection Agency (4503T), 1200 Pennsylvania Avenue, NW., Washington, DC 20460. The complete text of today's guidelines is also available on EPA's Internet site on the Nonpoint Source Control Branch homepage at *http://www.epa.gov/owow/nps.*

SUPPLEMENTARY INFORMATION: The full text of the Guidelines on Awarding Section 319 Grants to Indian Tribes in FY 2003 is published below.

Dated: April 3, 2003.

Diane C. Regas,

Director, Office of Wetlands, Oceans, and Watersheds.

Memorandum

Subject: Guidelines on Awarding Section 319 Grants to Indian Tribes in FY 2003.

From: Diane C. Regas, Director, Office of Wetlands, Oceans and Watersheds.

To: EPA Regional Water Division Directors, Regional Tribal Coordinators/Program Managers, Tribal Caucus, EPA Tribal Operations Committee.

I am very pleased to report that Congress has, for the fourth year in a row, authorized EPA to award nonpoint source (NPS) pollution control grants to Indian tribes under Section 319 of the Clean Water Act (''CWA'') in FY 2003 in an amount that exceeds the statutory cap (in Section 518(f) of the CWA) of 1/3 percent of the total 319 appropriation. This will enable all of the tribes that have approved NPS assessments and management programs and ''treatment-as-a-State'' (''TAS'') status (hereinafter referred to as ''approved tribes'') by January 8, 2003, to be eligible to receive Section 319 funding to help implement those programs.

The repeated allowance of increased funding for tribal NPS programs in FY 2003 reflects Congress' continuing recognition that Indian tribes need and deserve increased financial support to implement NPS programs that address critical water quality concerns on tribal lands. EPA shares this view and will continue to work closely with the tribes to assist them in developing and implementing effective tribal NPS pollution programs. To date, EPA has already approved 70 tribal NPS management programs, covering more than 35 million acres of land (representing more than 71 percent of all Indian country), and we expect to approve additional programs in FY 2003.

As was the case last year, the new authorization to exceed ⅓ percent applies only to the current year (FY 2003). As in the past, EPA will work with the tribes to continue to demonstrate that increased Section 319 funds for tribes can be used effectively to achieve water quality improvement. We were pleased by the high quality of the tribes' work plans that formed the basis of the grants awarded to tribes in FY 2002, which included base grants awarded to sixty-one (61) tribes as well as grants for specific watershed projects awarded to thirty (30) tribes through a competitive process. We believe that the tribes and EPA succeeded in directing the FY 2002 grants towards high-priority activities that will produce on-the-ground results that provide improved water quality. We believe that this success warrants continued substantial investment of Section 319 grant dollars in FY 2003 to address the extensive NPS control needs throughout Indian country, as discussed below. In recognition of this fact, we are once again awarding a total of $6,000,000 to tribes for FY 2003.

Summary of Process for FY 2003 Grants to Tribes

In FY 2003, we will set aside $6,000,000 for tribal nonpoint source grants. This amount is based on the same three factors as were used last year:

1. We will continue to support all eligible tribes with base grants.

2. We will award base funding to eligible tribes as follows:

a. $30,000 in base funding will be awarded to eligible tribes whose land area is less than 1,000 square miles (640,000 acres).

b. $50,000 in base funding will be awarded to eligible tribes whose land area is greater than 1,000 square miles (640,000 acres).

3. We will award the remaining funds to eligible tribes through a competitive process to support the implementation of priority watershed projects.

Detailed Discussion of Process for FY 2003 Grants to Tribes

1. Base Funding

Each tribe that has an approved nonpoint source assessment and management program (and TAS status) as of January 8, 2003, will receive base funding based on the following land area scale:

Square miles (acres)	Base amount
Less than 1,000 sq. mi. (less than 640,000 acres)	$30,000
Over 1,000 sq. mi. (over 640,000 acres)	50,000

The land area scale is the same as used last year. EPA is continuing to rely upon land area as the deciding factor for a cutoff because NPS pollution is strongly related to land use; thus land area is a reasonable criterion that generally is highly relevant to identifying tribes with the greatest needs (recognizing that many tribes have needs that significantly exceed available resources).

The base funding as outlined above may be used for a range of activities that implement the tribe's approved NPS management program, including hiring a program coordinator; conducting nonpoint source education programs; providing training; and implementing, alone or in conjunction with other agencies or other funding sources, on-the-ground watershed projects. In general, this base funding should not be used for assessment activities.

Each tribe that requests base funding must submit to the appropriate EPA Regional office a proposed work plan that conforms to applicable legal requirements (*see* 40 CFR 35.505 and 35.507) and is consistent with the tribe's approved nonpoint source management program. This proposed work plan should clearly describe each significant category of activity to be funded; the roles of any Federal, local, or other partners in completing each activity; the schedule and budget for implementing funded activities; and the outputs to be produced by performance of the activity. Outputs of activities should be quantified; results of projects should be measurable and indicators to do so clearly stated. Tribes should submit their proposed work plans to their appropriate Regional office by January 15, 2003. If a tribe does not submit an approvable proposed work plan by that date, its allocated amount will be added to the competitive pool, discussed immediately below, which will be used to fund tribal NPS program and watershed project priorities.

Regions should work with the tribes to expeditiously award the base grants. However, if the tribe will be awarded additional funds to implement a watershed project, as discussed below, the tribe or the Region may prefer combining the formal process for submission of the final application for both the base and competitive funds. Regions should confer with their tribes and endeavor to proceed in a manner and on a schedule that is most compatible with the tribes' and Regions' needs and preferences.

2. Competitive Funding: Process and Schedule To Select Watershed Projects for FY 2003 Funding

The remaining funds will be awarded to tribes that have approved nonpoint source management programs as of January 8, 2003, on a competitive basis to provide funding for on-the-ground nonpoint source watershed projects that are designed to achieve additional water quality improvement. Each selected project will be eligible to receive up to $150,000, depending on the demonstrated need. The funds will be awarded using the process described below.

a. Watershed Project Review Committee

As we did for the FY 2002 grants, EPA will establish a Watershed Project Review Committee comprised of nine EPA staff, including three EPA Regional Nonpoint Source Coordinators, three EPA Regional Tribal Coordinators, two staff members of the Nonpoint Source Control Branch, and one staff member of the American Indian Environmental Office. The committee will

then make funding decisions in accordance with the process described below.

b. Watershed Project Summaries

Tribes that have approved NPS assessments and management programs as well as TAS status as of January 8, 2003, are invited to apply for watershed project funding by submitting watershed project summaries for proposed projects up to a maximum budget of $150,000. (This funding is in addition to the base funding that each approved tribe will receive, as described above.) Tribes that apply for funding for watershed projects should submit a brief (*e.g.*, 3–5 pages) summary of a watershed project implementation plan by January 15, 2003, to the appropriate EPA Regional office for initial screening. (Complete grant applications should not be submitted until after projects are selected, pursuant to review by the Watershed Project Review Committee, as described below.) The Regional office will, by January 29, 2003, forward the proposals that meet the required criteria to EPA Headquarters for distribution to the Watershed Project Review Committee. (E-mail versions would be appreciated where possible because they can be shared among the reviewers most rapidly and easily.)

The watershed project summary should outline the nonpoint source pollution problem and the on-the-ground improvement to be addressed; the project's goals and objectives and the expected water quality benefit to the receiving waterbody; the lead implementing agency (either the tribe or another organization authorized by the tribe to be the project leader) and other agencies that will be authorized to expend project funds; the types of best management practices or measures that will be implemented; the projected implementation schedule; the project's budget items including construction costs; and the environmental performance measures that will be used to evaluate the success of the project. Each watershed plan summary should be clearly written with enough detail to show why the proposed project should be selected for competitive funding. This is critical to help ensure that the best projects are funded.

c. Selection Criteria for Funding Watershed Projects

In ranking the projects, each reviewer on EPA's Watershed Project Review Committee will consider the extent to which the following factors are present in each project.

1. The watershed plan summary includes a clear and specific identification of the on-the-ground improvement project and the water quality problem to be addressed, including the pollutants of concern and their sources (including critical areas to be treated, if known), and clearly describes the project to be constructed or installed.

2. Where relevant, the watershed project consists of implementation actions or load calculations that are intended to help restore an impaired waterbody for which an approved nonpoint source total maximum daily load (NPS TMDL) has been developed or the NPS components of mixed-source TMDLs. [**Note:** EPA recognizes that most tribes have not yet developed NPS TMDLs. However, section 319 funding may be used to develop and implement approved NPS TMDLs for any 303(d) listed waterbody. Where a tribe has developed a relevant water quality standard and NPS TMDL and seeks section 319 funding to assist in the implementation of the NPS TMDL, that should be considered by reviewers to be a relevant factor supporting the funding request.]

3. The proposed project is listed as a priority implementation project in the tribal NPS management program.

4. The proposed project is designed to include cooperation and/or combination of resources with other agencies and other parties to provide additional technical and/or financial assistance to the project.

5. The watershed plan summary includes a clear and objective statement of the project's goals and objectives, in terms of controlling nonpoint sources and/or of improving/protecting water quality.

6. The summary identifies the best management practices or measures to be implemented and the location where these measures and practices will be implemented.

7. The summary outlines the construction cost of the project and the amount of section 319 grant dollars that are requested, not to exceed $150,000. Please note that a 40-percent non-Federal match is also required. However, pursuant to section 35.635(b), EPA's Regional Administrator may increase the maximum Federal share if the tribe or intertribal consortium can demonstrate in writing to the satisfaction of the Regional Administrator that fiscal circumstances within the tribe or within each tribe that is a member of the intertribal consortium are constrained to such an extent that fulfilling the match requirement would impose undue hardship. In no case will the Federal share be greater than 90 percent.

8. The summary includes an implementation schedule.

9. The summary includes a statement of how the project will be evaluated to determine its success and to derive lessons that will assist the tribe (and other tribes) in future projects.

d. Award of Grants for Tribal Watershed Projects

(i) Award Decisions

The Watershed Project Review Committee will hold a conference call by February 12, 2003, to ensure that all Committee members fully understand and agree on how to objectively apply the criteria discussed above. Rankings will be developed by considering all of the factors as a whole, in accordance with a weighting system to be decided upon by the Committee.

By March 12, 2003, the Committee will compile the ranking of proposed watershed projects based on the selection criteria and then forward their rankings to the Nonpoint Source Control Branch at EPA Headquarters. Headquarters will tally the Committee's rankings and then hold a conference call to provide a final opportunity for members of the Review Committee to discuss the rankings among themselves. By March 19, 2003, EPA will select the highest ranked proposals and announce to the Regions which tribes' watershed projects have been selected for funding. These tribes will be notified immediately by phone or e-mail, with a written letter to follow.

(ii) Final Work Plans/Full Grant Applications

Once a Region and tribe have been notified of the amount that will be awarded to the tribe, they will negotiate a final work plan consistent with 40 CFR 35.507. After making appropriate changes, the tribe must submit a final work plan to the Region by March 31, 2003. If a tribe fails to or is unable to submit an approvable work plan by March 31, 2003, the Section 319(h) grant will instead be awarded to the next highest ranking unfunded application. Regions should endeavor to finalize the grant awards no later than 60 days after receipt of a complete grant application with an approvable work plan.

(iii) Match Requirements

The match requirement for Section 319 competitive grants is 40 percent of the approved work plan costs. The match requirement for Section 319 base grants is also 40 percent unless included as part of an approved Performance Partnership Grant which sets the match requirement at 5 percent of the allowable cost of the work plan budget for base funding only. Both the base funding and competitive funding components are discussed above. In general, consistent with 40 CFR 31.24, the match requirement may be satisfied by allowable costs borne by non-Federal grants, by cash donations from non-Federal third parties, or by the value of third party in-kind contributions.

EPA's regulations also provide that EPA may decrease the match requirement to as low as 10 percent if the tribe can demonstrate in writing to the Regional Administrator that fiscal circumstances within the tribe or within each tribe that is a member of the intertribal consortium are constrained to such an extent that fulfilling the match requirement would impose undue hardship. (*See* 40 CFR 35.635.)

In making grant awards to tribes that provide for a reduced match requirement, Regions should include a brief finding that the tribe has demonstrated that it does not have adequate funds to meet the required match.

Intertribal Consortia

Some tribes have formed intertribal consortia to promote cooperative work. An intertribal consortium is a partnership between two or more tribes that is authorized by the governing bodies of those tribes to apply for and receive assistance under this program. (*See* 40 CFR 35.502.) The intertribal consortium is eligible only if the consortium demonstrates that all its members meet the eligibility requirements for the Section 319 program and authorize the consortium to apply for and receive assistance in accordance with 40 CFR 35.504. An intertribal consortium must submit to EPA adequate documentation of the existence of the partnership and the authorization of the consortium by its members to apply for and receive the grant. (*See* 40 CFR 35.504.)

Technical Assistance to Tribes

In addition to providing NPS funding to tribes, EPA remains committed to providing continued technical assistance to tribes in their efforts to control nonpoint source pollution. During the past several years, EPA has presented many workshops to tribes throughout the United States to assist them in developing: (1) Nonpoint source assessments to further their understanding of nonpoint source pollution and its impact on water quality; (2) nonpoint source management programs to apply solutions to address their nonpoint source problems; and (3) specific projects to effect on-the-ground solutions. The workshops also have provided information on related EPA and other programs that can help tribes address nonpoint source pollution, including the provision of technical and funding assistance. EPA intends to continue providing NPS workshops to interested tribes around the United States in FY 2003 and to provide other appropriate technical assistance as needed.

Non-Tribal Lands

The following discussion explains the extent to which Section 319(h) grants may be awarded to tribes for use outside the reservation. We discuss two types of off-reservation activities: (1) Activities that are related to waters within a reservation, such as those relating to sources upstream of a waterway entering the reservation, and (2) activities that are unrelated to waters of a reservation. As discussed below, the first type of these activities may be eligible; the second is not.

1. Activities That Are Related to Waters Within a Reservation

Section 518 (e) of the CWA provides that EPA may treat an Indian tribe as a State for purposes of Section 319 of the CWA if, among other things, ''the functions to be exercised by the Indian tribe pertain to the management and protection of water resources which are * * * within the borders of an Indian reservation.'' 33 U.S.C. 1377 (e)(2). EPA already awards grants to tribes under Section 106 of the CWA for activities performed outside of a reservation that pertain to reservation waters, such as evaluating impacts of upstream waters on water resources within a reservation. Similarly, EPA has awarded section 106 grants to States to conduct monitoring outside of state borders. EPA has concluded that grants awarded to an Indian tribe pursuant to Section 319(h) may similarly be used to perform eligible Section 319(h) activities outside of a reservation if: (1) The activity pertains to the management and protection of waters within the reservation, and (2) just as for on-reservation activities, the tribe meets all other applicable requirements.

2. Activities That Are Unrelated to Waters of a Reservation

As discussed above, EPA is authorized to award Section 319(h) grants to tribes to perform eligible Section 319(h) activities if the activities pertain to the management and protection of waters within a reservation and the tribe meets all other applicable requirements. In contrast, EPA is not authorized to award Section 319(h) grants for activities that do not pertain to waters of a reservation. For off-reservation areas, including ''usual and accustomed'' hunting, fishing, and gathering places, EPA must determine whether the activities pertain to waters of a reservation prior to awarding a grant.

Milestones Summary

Date for Tribes to be Eligible for 319 Grants—January 8, 2003
Tribes Submit Base Grant Work Plans to Region—January 15, 2003
Tribes Submit Competitive Grant Proposals to Region—January 15, 2003
Region Forwards Proposals to Headquarters—January 29, 2003
Review Committee Discusses Proposals—February 12, 2003
Review Committee Forwards Ranking Scores to HQ—March 12, 2003
Headquarters Notifies Regions/Tribes of Selections—March 19, 2003
Tribes Submit Final Grant Application to Region—March 31, 2003

Statutory and Regulatory Requirements

All Section 319(h) grants will be awarded and administered consistent with the statutory requirements in Sections 319(h) and 518(e) of the Clean Water Act and applicable regulations in 40 CFR parts 31 and 35.

Conclusion

By once again lifting the ⅓ percent statutory cap in FY 2003, Congress has continued to provide the tribes and EPA with an excellent opportunity to further tribal efforts to reduce nonpoint pollution and enhance water quality on tribal lands. EPA looks forward to working closely with the tribes to assist them in implementing effective nonpoint source programs in FY 2003 and creating a sound basis to assure that adequate funds will continue to be provided in the future.

If you have any questions, please do not hesitate to call me or have your staff contact Ed Drabkowski at (202) 566–1198 (or by e-mail at *drabkowski.ed@epa.gov*).

cc: Carol Jorgensen, Director, American Indian Environmental Office, EPA
Jeff Besougloff, AIEO
Jerry Pardilla, National Tribal Environmental Council
Billy Frank, Northwest Indian Fisheries Council
Don Sampson, Columbia River Intertribal Fish Commission
James Schlender, Great Lakes Indian Fish and Wildlife Commission
All Tribes that have an approved Nonpoint Source Management Program
Regional Water Quality Branch Chiefs
Regional Nonpoint Source Coordinators

[FR Doc. 03–8828 Filed 5–1–03; 8:45 am]

BILLING CODE 6560–50–P

FARM CREDIT ADMINISTRATION

Farm Credit Administration Board; Regular Meeting

AGENCY: Farm Credit Administration.

SUMMARY: Notice is hereby given, pursuant to the Government in the Sunshine Act (5 U.S.C. 552b(e)(3)), of the regular meeting of the Farm Credit Administration Board (Board).

DATE AND TIME: The regular meeting of the Board will be held at the offices of the Farm Credit Administration in McLean, Virginia, on May 8, 2003, from 9 a.m. until such time as the Board concludes its business.

FOR FURTHER INFORMATION CONTACT: Jeanette C. Brinkley, Secretary to the Farm Credit Administration Board, (703) 883–4009, TTY (703) 883–4056.

ADDRESSES: Farm Credit Administration, 1501 Farm Credit Drive, McLean, Virginia 22102–5090.

SUPPLEMENTARY INFORMATION: Parts of this meeting of the Board will be open to the public (limited space available), and parts will be closed to the public. In order to increase the accessibility to Board meetings, persons requiring assistance should make arrangements in advance. The matters to be considered at the meeting are:

Open Session

A. Approval of Minutes

—April 10, 2003 (Open and Closed)

B. Reports

—Economic Issues and Implications for Agriculture

C. New Business

1. Regulations

—Regulatory Burden—Notice of Intent; Request for Comment

2. Other

—Wichita and Western Farm Credit Merger

Closed Session*

New Business

—Preferred Stock Issuance

Dated: April 30, 2003.

Jeanette C. Brinkley,

Secretary, Farm Credit Administration Board.

[FR Doc. 03–10996 Filed 4–30–03; 12:01 pm]

BILLING CODE 6705–01–P

* Session Closed-Exempt pursuant to 5 U.S.C. 552b(c)(4) and (8).

FEDERAL COMMUNICATIONS COMMISSION

Notice of Public Information Collection(s) Being Submitted to OMB for Review and Approval

April 22, 2003.

SUMMARY: The Federal Communications Commissions, as part of its continuing effort to reduce paperwork burden invites the general public and other Federal agencies to take this opportunity to comment on the following information collection, as required by the Paperwork Reduction Act of 1995, Public Law 104–13. An agency may not conduct or sponsor a collection of information unless it displays a currently valid control number. No person shall be subject to any penalty for failing to comply with a collection of information subject to the Paperwork Reduction Act (PRA) that does not display a valid control number. Comments are requested concerning (a) whether the proposed collection of information is necessary for the proper performance of the functions of the Commission, including whether the information shall have practical utility; (b) the accuracy of the Commission's burden estimate; (c) ways to enhance the quality, utility, and clarity of the information collected; and (d) ways to minimize the burden of the collection of information on the respondents, including the use of automated collection techniques or other forms of information technology.

DATES: Written comments should be submitted on or before June 2, 2003. If you anticipate that you will be submitting comments, but find it difficult to do so within the period of time allowed by this notice, you should advise the contact listed below as soon as possible.

ADDRESSES: Direct all comments to Les Smith, Federal Communications Commission, Room 1–A804, 445 12th Street, SW., Washington, DC 20554 or via the Internet to *Leslie.Smith@fcc.gov.*

FOR FURTHER INFORMATION CONTACT: For additional information or copies of the information collections contact Les Smith at (202) 418–0217 or via the Internet at Leslie.Smith@fcc.gov.

SUPPLEMENTARY INFORMATION:

OMB Control Number: 3060–0161.

Title: Section 73.61, AM Directional Antenna Field Strength Measurements.

Form Number: N/A.

Type of Review: Extension of a currently approved collection.

Respondents: Business and other for-profit entities.

Number of Respondents: 1,890.

Estimated Time per Response: 4 hours.

Frequency of Response: Recordkeeping.

Total Annual Burden: 36,020 hours.

Total Annual Costs: None.

Needs and Uses: 47 CFR 73.61 requires each AM station using directional antennas to make field strength measurement as often as necessary to ensure proper directional antenna system operation. Stations not having approved sampling systems make field strength measurements every three months. Stations with approved sampling systems must take field strength measurements as often as necessary. Also, all AM station using directional signals must take partial proofs of performance as often as necessary. The FCC staff used the data in field inspections/investigations. AM licensees with directional antennas use the data to ensure that adequate interference protection is maintained between stations and to ensure proper operation of antennas.

OMB Control Number: 3060–0506.

Title: Application for FM Broadcast Station License, Form 302–FM.

Form Number: FCC 302–FM.

Type of Review: Extension of a currently approved collection.

Respondents: Business or other for-profit entities; not-for-profit institutions.

Number of Respondents: 925.

Estimated Time per Response: 1–2 hours.

Frequency of Response: On occasion reporting requirements.

Total Annual Burden: 3,135 hours.

Total Annual Costs: $620,000.

Needs and Uses: On October 2, 1998, the FCC adopted a Report and Order (R&O) in MM Docket Nos. 98–43 and 94–149. Among other things, the R&O substantially revised the FCC Form 302–FM to facilitate electronic filing by using certifications and an engineering technical box; simplifying questions; and providing instructions for processing standards and rule interpretations. These changes reduced the applicant's filing burdens when preparing and submitting supporting exhibits and streamlined the Commission's application processing. The Commission has also begun to audit pre- and post-application grants at random to preserve the application process' integrity. The FCC uses the data to confirm that each station has been built as specified in the construction permit; to update FCC station files; and for inclusion in future station operating licenses.

OMB Control Number: 3060–0627.

Title: Application for AM Broadcast Station License, FCC Form 302–AM.

Form Number: FCC 302–AM.

Type of Review: Extension of currently approved collection.

Respondents: Business or other for-profit entities; Not-for-profit institutions.

Number of Respondents: 380.

Estimated Time per Response: 4–20 hours.

Frequency of Response: On occasion reporting requirements.

Total Annual Burden: 2,800 hours.

Total Annual Costs: $10,074.

Needs and Uses: On October 22, 1998, the Commission adopted a Report and Order (R&O) in MM Docket Nos. 98–43 and 94–149. Among other things, this R&O revised the FCC Form 302–AM to facilitate electronic filing by using of certifications and an engineering technical box; revising questions; and adding detailed instructions for processing standards and rule interpretations. These changes reduced the applicant's filing burden when preparing and submitting supporting exhibits and allowed the Commission to streamline its application processing. The Commission has also begun to audit pre- and post-application grants at random to preserve the integrity of the application process. The FCC uses these data to confirm that each station has been built as specified in the construction permit; to update FCC station files; and for inclusion in future station operating licenses.

OMB Control Number: 3060–0930.

Title: Implementation of the Satellite Home Viewer Improvement Act of 1999. Enforcement Procedures for Retransmission Consent Violations Conforming to Section 325(e) of the Communications Act of 1934, as amended.

Form Number: N/A.

Type of Review: Extension of a currently approved collection.

Respondents: Business and other for-profit entities.

Number of Respondents: 8.

Estimated Time per Response: 2 hours (multiple responses/year).

Frequency of Response: On occasion reporting requirements.

Total Annual Burden: 192 hours.

Total Annual Costs: None.

Needs and Uses: Congress directed the Commission to adopt regulations related to retransmission consent pursuant to the changes outlined in the Satellite Home Viewer Improvement Act of 1999. Retransmission consent is the process whereby television broadcasters negotiate and consent to carriage of their signals by MVPDs. Television broadcasters will be required to make an election and make status information

available for public review. The availability of such information will serve the purpose of informing the public of the method of broadcast signal carriage.

OMB Control Number: 3060–0573.

Title: Application for Franchise Authority Consent to Assignment or Transfer of Control of Cable Television Franchise, FCC Form 394.

Form Number: FCC Form 394.

Type of Review: Extension of currently approved collection.

Respondents: Business or other for-profit entities; State, Local or Tribal Government.

Number of Respondents: 2,000.

Estimated Time per Response: 1–5 hours.

Frequency of Response: Third party disclosure.

Total Annual Burden: 7,000 hours.

Total Annual Costs: $375,000.

Needs and Uses: Cable operators use FCC Form 394 to apply to the local franchise authority (LFA) for approval to assign or transfer control of a cable television system. With the information provided by Form 394, LFAs can restrict profiteering transactions and other transfers that are likely to have an adverse effect on cable rates or service in the franchise area.

Federal Communications Commission.

Marlene H. Dortch,

Secretary.

[FR Doc. 03–10853 Filed 5–1–03; 8:45 am]

BILLING CODE 6712–01–P

FEDERAL COMMUNICATIONS COMMISSION

Notice of Public Information Collection(s) Being Submitted to OMB for Review and Approval

April 24, 2003.

SUMMARY: The Federal Communications Commissions, as part of its continuing effort to reduce paperwork burden invites the general public and other Federal agencies to take this opportunity to comment on the following information collection, as required by the Paperwork Reduction Act of 1995, Public Law 104–13. An agency may not conduct or sponsor a collection of information unless it displays a currently valid control number. No person shall be subject to any penalty for failing to comply with a collection of information subject to the Paperwork Reduction Act (PRA) that does not display a valid control number. Comments are requested concerning (a) whether the proposed collection of information is necessary for the proper performance of the functions of the Commission, including whether the information shall have practical utility; (b) the accuracy of the Commission's burden estimate; (c) ways to enhance the quality, utility, and clarity of the information collected; and (d) ways to minimize the burden of the collection of information on the respondents, including the use of automated collection techniques or other forms of information technology.

DATES: Written comments should be submitted on or before June 2, 2003. If you anticipate that you will be submitting comments, but find it difficult to do so within the period of time allowed by this notice, you should advise the contact listed below as soon as possible.

ADDRESSES: Direct all comments to Les Smith, Federal Communications Commission, Room 1–A804, 445 12th Street, SW., Washington, DC 20554 or via the Internet to *Leslie.Smith@fcc.gov.*

FOR FURTHER INFORMATION CONTACT: For additional information or copies of the information collections contact Les Smith at (202) 418–0217 or via the Internet at *Leslie.Smith@fcc.gov.*

SUPPLEMENTARY INFORMATION: *OMB Control Number:* 3060–0017.

Title: Application for a Low Power TV, Translator, or TV Booster Station License, FCC Form 347.

Form Number: FCC Form 347.

Type of Review: Extension of a currently approved collection.

Respondents: Business or other for-profit entities; individuals or households; State, local or Tribal Government.

Number of Respondents: 300.

Estimated Time per Response: 1.5 hours.

Frequency of Response: On occasion reporting requirements.

Total Annual Burden: 450 hours.

Total Annual Costs: $36,000.

Needs and Uses: Applicants/Licensees/Permittees of low power television, TV translator, or TV booster stations use FCC Form 347 to apply for a station license. The FCC staff use the data to confirm that the station has been built to terms specified in the outstanding construction permit and to process the applicant's license to operate the station. Data from Form 347 are also extracted for inclusion in the subsequent license to operate the station.

Federal Communications Commission.

Marlene H. Dortch,

Secretary.

[FR Doc. 03–10854 Filed 5–1–03; 8:45 am]

BILLING CODE 6712–01–P

FEDERAL COMMUNICATIONS COMMISSION

[MM 98–204; DA 03–1116]

Media Bureau Implements New EEO Form 396 With Mandatory Electronic Filing

AGENCY: Federal Communications Commission.

ACTION: Notice.

SUMMARY: This document announces the mandatory electronic filing of the FCC broadcast Equal Employment Opportunity Form 396. The Commission suspended the previous version of this form and adopted the current version with a new EEO rule. Paper version of the form will not be accepted after deadline date unless accompanied by request for waiver.

FOR FURTHER INFORMATION CONTACT: Lewis Pulley (202) 418–1456 or Roy Boyce (202) 418–1438, Policy Division, Media Bureau.

SUPPLEMENTARY INFORMATION: This is a summary of the Media Bureau's Public Notice (''PN''), DA 03–1116, released April 9, 2003. The complete text of this PN is available for inspection and copying during normal business hours in the FCC Reference Center, Room CY–A257, 445 12th Street, SW., Washington, DC and may also be purchased from the Commission's copy contractor, Qualex International, Portals II, 445 12th Street SW., Room CY–B–402, Washington, DC 20554, telephone (202) 863–2893, facsimile (202) 863–2898, or via e-mail *qualexint@aol.com.*

Synopsis of Public Notice

1. By this PN the Media Bureau announces mandatory electronic filing for FCC Form 396 Broadcast Equal Employment Opportunity Program Report (March, 2003 Edition).

2. Mandatory electronic filing commenced on April 1, 2003. The paper version of this form will not be accepted for filing after April 1, 2003, unless accompanied by an appropriate request for waiver of the electronic filing requirement. Users can access the electronic filing system *via* the Internet from the Media Bureau's Web site at: *http://www.fcc.gov/mb.*

3. Pursuant to the *1998 Biennial Regulatory Review—Streamlining of Mass Media Applications, Rules and Processes* (63 FR 66104, December 1, 1998, Notice of Proposed Rulemaking ''NPRM''), mandatory electronic filing was to commence six-months after a given form was made available for electronic use. The then Mass Media Bureau made FCC Form 396 available

for electronic use more than six months ago. The form was made available in connection with a broadcast Equal Employment Opportunity (''EEO'') rule adopted in January 2000 that was subsequently vacated as a result of a Court order. As a result of the Court's action, the prior version of Form 396 was suspended in January 2001. The current version was adopted by the *Second Report and Order, (68 FR 670, January 7, 2003) and Third Notice of Proposed Rule Making (67 FR 77374, December 17, 2002) in MM Docket No. 98–204,* that adopted a new broadcast EEO rule. It is substantially similar to the version adopted in January 2000.

4. In the NPRM, which announced the Commission's electronic filing requirement, the Commission recognized the need for limited waivers of this requirement in light of the ''burden that electronic filing could place upon some licensees who are seeking to serve the public interest, with limited resources, and succeed in a highly competitive local environment.'' Such waivers will not be routinely granted and the applicant must plead with particularity the facts and circumstances warranting relief.

5. Instructions for use of the electronic filing system are available in the CDBS User's Guide which can be accessed from the electronic filing web site. Special attention should be given to the details of the applicant account registration function, form filing function, and the fee form handling procedures, if a fee is required. Failure to follow the procedures in the User's Guide may result in an application being dismissed, returned, or not considered as officially filed.

6. Internet access to the CDBS public access system at the Commission's Web site requires a user to have a browser such as Netscape version 3.04 or Internet Explorer version 3.51, or later.

7. For technical assistance using the system or to report problems, please contact the CDBS Help Desk at (202) 418–2MMB. To request additional information concerning specific broadcast applications, please call (202) 418–2700 (radio forms) or (202) 418–1600 (television forms).

FCC Notice Required by the Paperwork Reduction Act

8. On February 14, 2003, the Commission received approval for the information collection contained herein pursuant to the ''emergency processing'' provisions of the Paperwork Reduction Act of 1995 (5 CFR 1320.13). The OMB Control Number for the FCC Form 396 is 3060–0113. The annual reporting burdens for this collection of information, including the time for reviewing instructions, searching existing data sources, gathering and maintaining the required data and completing and reviewing the collection of information, are estimated to be: 2,000 respondents, 1.5 hours per response per annum, for a total annual burden of 3000 hours; $100,000 in annual costs. If you have any comments on this burden estimate, or how we can improve the collection and reduce the burden it causes you, please write to Les Smith, Federal Communications Commission, Room 1–A804, 445 12th Street, SW., Washington, DC, 20554. Please include the OMB Control Number: 3060–0113, in your correspondence. We will also accept your comments regarding the Paperwork Reduction Act aspects of this collection via the Internet if you send them to *lesmith@fcc.gov* or call (202) 418–0217.

9. Under 5 CFR 1320, an agency may not conduct or sponsor a collection of information unless it displays a current valid control number. No person shall be subject to any penalty for failing to comply with a collection of information subject to the Paperwork Reduction Act (PRA) that does not display a valid control number. The OMB Control Number for this collection is 3060–0120. *The forgoing Notice is required by the Paperwork Reduction Act of 1995, Public Law 104–13, October 1, 1995, 44 U.S.C. 3507.*

Federal Communications Commission.

Marlene H. Dortch,

Secretary.

[FR Doc. 03–10855 Filed 5–1–03; 8:45 am]

BILLING CODE 6712–01–P

FEDERAL RESERVE SYSTEM

Formations of, Acquisitions by, and Mergers of Bank Holding Companies

The companies listed in this notice have applied to the Board for approval, pursuant to the Bank Holding Company Act of 1956 (12 U.S.C. 1841 *et seq.*) (BHC Act), Regulation Y (12 CFR Part 225), and all other applicable statutes and regulations to become a bank holding company and/or to acquire the assets or the ownership of, control of, or the power to vote shares of a bank or bank holding company and all of the banks and nonbanking companies owned by the bank holding company, including the companies listed below.

The applications listed below, as well as other related filings required by the Board, are available for immediate inspection at the Federal Reserve Bank indicated. The application also will be available for inspection at the offices of the Board of Governors. Interested persons may express their views in writing on the standards enumerated in the BHC Act (12 U.S.C. 1842(c)). If the proposal also involves the acquisition of a nonbanking company, the review also includes whether the acquisition of the nonbanking company complies with the standards in section 4 of the BHC Act (12 U.S.C. 1843). Unless otherwise noted, nonbanking activities will be conducted throughout the United States. Additional information on all bank holding companies may be obtained from the National Information Center Web site at *www.ffiec.gov/nic/.*

Unless otherwise noted, comments regarding each of these applications must be received at the Reserve Bank indicated or the offices of the Board of Governors not later than May 27, 2003.

A. Federal Reserve Bank of St. Louis (Randall C. Sumner, Vice President) 411 Locust Street, St. Louis, Missouri 63166-2034:

1. Carlinville National Bank Shares, Inc., Carlinville, Illinois; to acquire 100 percent of the voting shares of Cornerstone Bank & Trust, National Association, Carrollton, Illinois.

Board of Governors of the Federal Reserve System, April 28, 2003.

Robert deV. Frierson,

Deputy Secretary of the Board.

[FR Doc. 03–10824 Filed 5–1–03; 8:45 am]

BILLING CODE 6210–01–S

FEDERAL RETIREMENT THRIFT INVESTMENT BOARD

Sunshine Act Meeting

TIME AND DATE: 9 a.m. (EDT), May 12, 2003.

PLACE: 4th Floor, Conference Room, 1250 H Street, NW., Washington, DC.

STATUS: Parts will be open to the public and parts closed to the public.

MATTERS TO BE CONSIDERED: Parts Open to the Public

1. Approval of minutes of the April 28, 2003, Board member meeting.
2. Executive Director's report, including the following items:
   a. Legislative report,
   b. Investment report, and
   c. Participation information.
3. Mid-year review of the Board's budget.
4. Status of new record keeping system.

Parts Closed to the Public

5. Discussion of litigation matters.
6. Discussion of personnel matters.

CONTACT PERSON FOR MORE INFORMATION: Thomas J. Trabucco, Director, Office of External Affairs, (202) 942–1640.

Elizabeth S. Woodruff,

Secretary to the Board, Federal Retirement Thrift Investment Board.

[FR Doc. 03–11056 Filed 4–30–03; 2:12 pm]

BILLING CODE 6760–01–M

GENERAL SERVICES ADMINISTRATION

Privacy Act of 1974; Proposed Revisions to a System of Records

AGENCY: General Services Administration.

ACTION: Notice of proposed revision to an existing Privacy Act system of records.

SUMMARY: The General Services Administration (GSA) proposes to upgrade the government-wide system of records, Contracted Travel Services Program (GSA/GOVT–4), as part of GSA's responsibility to enhance the Federal government's electronic capability. The revised system will include electronic capabilities under a proposed new contract for a government-wide electronic travel service (eTS). The procurement is expected to be completed and a contract awarded before the end of the year. With the award of the contract, a new category of travel service provider will be maintaining information in a comprehensive travel services system for travelers on official Federal business, from initial travel authorization to the final accounting. Changes to the system Privacy Act notice include: Addition of the eTS contractor(s) as a system location; new categories of records needed to accommodate the electronic processes; and inclusion of administrative requirements in the routine uses.

DATES: Any interested persons may submit written comments on this proposal. It will become effective without further notice on June 2, 2003, unless comments received on or before that date result in a contrary determination.

ADDRESSES: Comments should be submitted to the Assistant Commissioner, Office of Transportation and Property Management (FB), Federal Supply Service, General Services Administration, Crystal Mall Building 4, 1941 Jefferson Davis Highway, Arlington, VA 22202.

FOR FURTHER INFORMATION CONTACT: GSA Privacy Act Officer, General Services Administration, Office of the Chief People Officer, 1800 F Street NW., Washington, DC 20405; telephone (202) 501–1452.

Dated: April 28, 2003.

Daniel K. Cooper,

Director, Information Management Division.

GSA/GOVT–4

SYSTEM NAME:

Contracted Travel Services Program.

SYSTEM LOCATION:

System records are located at the service providers under contract with a Federal agency and at the Federal agencies using the contracts.

CATEGORIES OF INDIVIDUALS COVERED BY THE SYSTEM:

Individuals covered by the system are Federal employees authorized to perform, approve, arrange or reimburse official travel, and individuals being provided travel by the Federal government.

CATEGORIES OF RECORDS IN THE SYSTEM:

System records include a traveler's profile containing: Name of individual; Social Security Number; employee identification number; home and office telephones; home address; home and office e-mail addresses; emergency contact name and telephone number; agency name, address, and telephone number; air travel preference; rental car identification number and car preference; hotel preference; current passport and/or visa number(s); credit card numbers and related information; bank account information needed for electronic funds transfer; frequent traveler account information (*e.g.*, frequent flyer account numbers); trip information (*e.g.*, destinations, reservation information); travel authorization information; travel claim information; monthly reports from travel agent(s) showing charges to individuals, balances, and other types of account analyses; and other official travel related information.

AUTHORITY FOR MAINTENANCE OF THE SYSTEM:

31 U.S.C. 3511, 3512, and 3523; 5 U.S.C. chapter 57; and implementing Federal Travel Regulations (41 CFR parts 301–304).

PURPOSE(S):

To establish a comprehensive beginning-to-end travel services system containing information to enable travel service providers under contract to the Federal government to authorize, issue, and account for travel and travel reimbursements provided to individuals on official Federal government business.

ROUTINE USES OF RECORDS MAINTAINED IN THE SYSTEM, INCLUDING CATEGORIES OF USERS AND THE PURPOSES OF SUCH USES:

Information in the system may be disclosed as a routine use as follows:

a. To a Federal, State, local, or foreign agency responsible for investigating, prosecuting, enforcing, or carrying out a statute, rule, regulation, or order, where agencies become aware of a violation or potential violation of civil or criminal law or regulation.

b. To another Federal agency or a court when the Federal government is party to a judicial proceeding.

c. To a Member of Congress or a congressional staff member in response to an inquiry from that congressional office made at the request of the individual who is the subject of the record.

d. To a Federal agency employee, expert, consultant, or contractor in performing a Federal duty for purposes of authorizing, arranging, and/or claiming reimbursement for official travel, including, but not limited to, traveler profile information.

e. To a credit card company for billing purposes, including collection of past due amounts.

f. To a Federal agency for accumulating reporting data and monitoring the system.

g. To a Federal agency by the contractor in the form of itemized statements or invoices, and reports of all transactions, including refunds and adjustments to enable audits of charges to the Federal government.

h. To a Federal agency, in response to its request, in connection with the hiring or retention of any employee to the extent that the information is relevant and necessary to the requesting agency's decision on the matter.

i. To an authorized appeal or grievance examiner, formal complaints examiner, equal employment opportunity investigator, arbitrator, or other duly authorized official engaged in investigation or settlement of a grievance, complaint, or appeal filed by an employee to whom the information pertains.

j. To the Office of Personnel Management (OPM) in accordance with the agency's responsibility for evaluation of Federal personnel management.

k. To officials of labor organizations recognized under 5 U.S.C. chapter 71 when relevant and necessary to their duties of exclusive representation concerning personnel policies, practices, and matters affecting working conditions.

l. To a travel services provider for billing and refund purposes.

m. To a carrier or an insurer for settlement of an employee claim for loss of or damage to personal property incident to service under 31 U.S.C. 3721, or to a party involved in a tort claim against the Federal government resulting from an accident involving a traveler.

n. To a credit reporting agency or credit bureau, as allowed and authorized by law, for the purpose of adding to a credit history file when it has been determined that an individual's account with a creditor with input to the system is delinquent.

POLICIES AND PRACTICES FOR STORING, RETRIEVING, REVIEWING, RETAINING, AND DISPOSING OF RECORDS IN THE SYSTEM:

STORAGE:

Paper records are stored in file cabinets. Electronic records are maintained within a computer (e.g., PC, server, etc.) and attached equipment.

RETRIEVABILITY:

Paper records are filed by name and/or Social Security Number/employee identification number at each location. Electronic records are retrievable by any attribute of the system, including but not limited to the traveler profile, passenger name reference, etc.

SAFEGUARDS:

Paper records are stored in lockable file cabinets or secured rooms. Electronic records are protected by a password system and a secure socket layer encrypted Internet connection. Information is released only to authorized users and officials on a need-to-know basis.

RETENTION AND DISPOSAL:

Records kept by a Federal agency are maintained in accordance with the General Records Retention Schedules issued by the National Archives and Records Administration (NARA).

SYSTEM MANAGER(S) AND ADDRESS:

Assistant Commissioner, Office of Transportation and Property Management (FB), Federal Supply Service, General Services Administration, Crystal Mall Building 4, 1941 Jefferson Davis Highway, Arlington VA 22202.

NOTIFICATION PROCEDURE:

Inquiries from individuals should be addressed to the appropriate administrative office for the agency that is authorizing and/or reimbursing their travel.

RECORDS ACCESS PROCEDURES:

Requests from individuals should be addressed to the appropriate administrative office for the agency that is authorizing and/or reimbursing their travel. Individuals must furnish their full name and/or Social Security Number to the authorizing agency for their records to be located and identified.

CONTESTING RECORD PROCEDURES:

Individuals wishing to request amendment of their records should contact the appropriate administrative office for the agency that authorized and/or reimbursed their travel. Individuals must furnish their full name and/or Social Security Number along with the name of the authorizing agency, including duty station where they were employed at the time travel was performed.

RECORD SOURCE CATEGORIES:

The sources are the individuals themselves, employees, travel authorizations, credit card companies, and travel service providers.

[FR Doc. 03–10804 Filed 5–1–03; 8:45 am]

BILLING CODE 6820–34–P

DEPARTMENT OF HEALTH AND HUMAN SERVICES

Centers for Medicare and Medicaid Services

[CMS–10082]

Agency Information Collection Activities: Submission for OMB Review; Comment Request

AGENCY: Centers for Medicare and Medicaid Services, HHS.

In compliance with the requirement of section 3506(c)(2)(A) of the Paperwork Reduction Act of 1995, the Centers for Medicare and Medicaid Services (CMS) (formerly known as the Health Care Financing Administration (HCFA)), Department of Health and Human Services, is publishing the following summary of proposed collections for public comment. Interested persons are invited to send comments regarding this burden estimate or any other aspect of this collection of information, including any of the following subjects: (1) The necessity and utility of the proposed information collection for the proper performance of the agency's functions; (2) the accuracy of the estimated burden; (3) ways to enhance the quality, utility, and clarity of the information to be collected; and (4) the use of automated collection techniques or other forms of information technology to minimize the information collection burden.

Type of Information Collection Request: New collection; *Title of Information Collection:* Survey of States Performance Measurement Reporting Capability; *Form No.:* CMS–10082 (OMB# 0938–NEW); *Use:* Because of the wide variability of Medicaid and SCHIP financing and service delivery approaches, there is little common ground from which to develop uniform reporting on performance measures by states. While CMS has decided on the first seven measures to be used, the ability of states to calculate those measures using HEDIS directly or HEDIS specifications (*e.g.,* when calculating measures from fee-for-service claims data) is highly variable. Current efforts are focused on assessing the capability of each state to report on the selected measures and on helping states to make necessary adjustments in order to be able to report measures uniformly so that state-to-state comparisons can be made. To accomplish this, states will be requested to report available numerator and denominator data for the seven core HEDIS measures via a survey instrument created for this purpose. The data will be requested for each state's Medicaid and SCHIP programs by delivery system; *Frequency:* Once; *Affected Public:* State, local, and tribal government; *Number of Respondents:* 51; *Total Annual Responses:* 51; *Total Annual Hours:* 2,360.

To obtain copies of the supporting statement and any related forms for the proposed paperwork collections referenced above, access CMS Web site address at *http://cms.hhs.gov/regulations/pra/default.asp*, or e-mail your request, including your address, phone number, OMB number, and CMS document identifier, to *Paperwork@hcfa.gov*, or call the Reports Clearance Office on (410) 786–1326. Written comments and recommendations for the proposed information collections must be mailed within 30 days of this notice directly to the OMB desk officer: OMB Human Resources and Housing Branch, Attention: Brenda Aguilar, New Executive Office Building, Room 10235, Washington, DC 20503.

Dated: April 25, 2003.

Julie Brown,

Acting, Paperwork Reduction Act Team Leader, CMS Reports Clearance Officer, Office of Strategic Operations and Regulatory Affairs, Division of Regulations Development and Issuances.

[FR Doc. 03–10837 Filed 5–1–03; 8:45 am]

BILLING CODE 4120–03–P

DEPARTMENT OF HEALTH AND HUMAN SERVICES

Centers for Medicare and Medicaid Services

[CMS–R–136]

Agency Information Collection Activities: Proposed Collection; Comment Request

AGENCY: Centers for Medicare and Medicaid Services, HHS.

In compliance with the requirement of section 3506(c)(2)(A) of the Paperwork Reduction Act of 1995, the Centers for Medicare and Medicaid Services (CMS) (formerly known as the Health Care Financing Administration (CMS)), Department of Health and Human Services, is publishing the following summary of proposed collections for public comment. Interested persons are invited to send comments regarding this burden estimate or any other aspect of this collection of information, including any of the following subjects: (1) The necessity and utility of the proposed information collection for the proper performance of the agency's functions; (2) the accuracy of the estimated burden; (3) ways to enhance the quality, utility, and clarity of the information to be collected; and (4) the use of automated collection techniques or other forms of information technology to minimize the information collection burden.

Type of Information Collection Request: Reinstatement, without change, of a previously approved collection for which approval has expired; *Title of Information Collection:* Proper Claim Not Filed and Supporting Regulation Contained in 42 CFR 411.32(c); *Form No.:* CMS–R–136) (OMB# 0938–0564); *Use:* Section 411.32(c) requires a provider, supplier, or beneficiary to notify Medicare that a claim to a third party was improperly filed; *Frequency:* On occasion; *Affected Public:* Business or other for-profit, Not-for-profit institutions, Individuals or households; *Number of Respondents:* 13,311; *Total Annual Responses:* 13,311; *Total Annual Hours:* 0.

To obtain copies of the supporting statement and any related forms for the proposed paperwork collections referenced above, access CMS's Web site address at *http://cms.hhs.gov/regulations/pra/default.asp*, or E-mail your request, including your address, phone number, OMB number, and CMS document identifier, to *Paperwork@hcfa.gov,* or call the Reports Clearance Office on (410) 786–1326. Written comments and recommendations for the proposed information collections must be mailed within 60 days of this notice directly to the CMS Paperwork Clearance Officer designated at the following address: CMS, Office of Strategic Operations and Regulatory Affairs, Division of Regulations Development and Issuances, Attention: Dawn Willinghan, Room: C5–14–03, 7500 Security Boulevard, Baltimore, Maryland 21244–1850.

Dated: April 25, 2003.

Julie Brown,

Acting, Paperwork Reduction Act Team Leader, CMS Reports Clearance Officer, Office of Strategic Operations and Strategic Affairs, Division of Regulations Development and Issuances.

[FR Doc. 03–10838 Filed 5–1–03; 8:45 am]

BILLING CODE 4120–03–P

DEPARTMENT OF HEALTH AND HUMAN SERVICES

Food and Drug Administration

Cardiovascular and Renal Drugs Advisory Committee; Notice of Meeting

AGENCY: Food and Drug Administration, HHS.

ACTION: Notice.

This notice announces a forthcoming meeting of a public advisory committee of the Food and Drug Administration (FDA). At least one portion of the meeting will be closed to the public.

Name of Committee: Cardiovascular and Renal Drugs Advisory Committee.

General Function of the Committee: To provide advice and recommendations to the agency on FDA's regulatory issues.

Date and Time: The meeting will be held on May 29, 2003, from 8 a.m. to 5 p.m. and on May 30, 2003, from 8 a.m. to 12 noon.

Location: Holiday Inn, Kennedy Ballroom, 8777 Georgia Ave., Silver Spring, MD.

Contact Person: Jayne E. Peterson, Center for Drug Evaluation and Research (HFD–21), Food and Drug Administration, 5600 Fishers Lane, (for express delivery, 5630 Fishers Lane, rm. 1093) Rockville, MD 20857, 301–827–7001, petersonj@cder.fda.gov, or FDA Advisory Committee Information Line, 1–800–741–8138 (301–443–0572 in the Washington, DC area), code 12533. Please call the Information Line for up-to-date information on this meeting. When available, background materials for this meeting will be posted 1 business day prior to the meeting on the FDA Web site at: www.fda.gov/ohrms/dockets/ac/acmenu.htm. (Click on the year 2003 and scroll down to Cardiovascular and Renal Drugs Advisory Committee meetings.)

Agenda: On May 29, 2003, the committee will discuss QT prolongation issues associated with two new drug applications (NDAs): (1) NDA 21–287, (alfuzosin HCl), Sanofi-Synthelabo Inc., for the proposed indication of treatment of the signs and symptoms of benign prostatic hyperplasia; and (2) NDA 21–400, Levitra (vardenafil HCl), Bayer Corp., proposed for the indication of treatment of erectile dysfunction. The discussion will focus on: (1) Clinical trial designs for assessment of QT prolongation; (2) approaches to the correction of QT interval for drugs that affect the heart rate; and (3) risks of cardiac arrythmias associated with different degrees of QT prolongation. Premarketing clinical safety data from these applications and postmarketing safety data relevant to cardiac QT prolongation from drugs in the same two drug classes (i.e., alpha adrenergic blockers and phosphodiesterase type 5 inhibitors) will be considered.

On May 30, 2003, the meeting will be closed to permit discussion and review of trade secret and/or confidential information.

Procedure: On May 29, 2003, the meeting is open to the public. Interested persons may present data, information, or views, orally or in writing, on issues pending before the committee. Written submissions may be made to the contact person by May 21, 2003. Oral presentations from the public will be scheduled between approximately 1 p.m. and 2 p.m. on May 29, 2003. Time allotted for each presentation may be limited. Those desiring to make formal oral presentations should notify the contact person before May 21, 2003, and submit a brief statement of the general nature of the evidence or arguments they wish to present, the names and addresses of proposed participants, and an indication of the approximate time requested to make their presentation.

Closed Presentation of Data: On May 30, 2003, the meeting will be closed to permit discussion and review of trade secret and/or confidential information (5 U.S.C. 552b(c)(4)).

Persons attending FDA's advisory committee meetings are advised that the agency is not responsible for providing access to electrical outlets.

FDA welcomes the attendance of the public at its advisory committee meetings and will make every effort to accommodate persons with physical disabilities or special needs. If you require special accommodations due to a disability, please contact Jayne

Peterson at least 7 days in advance of the meeting.

Notice of this meeting is given under the Federal Advisory Committee Act (5 U.S.C. app. 2).

Dated: April 24, 2003.

Peter J. Pitts,

Associate Commissioner for External Relations.

[FR Doc. 03–10805 Filed 5–1–03; 8:45 am]

BILLING CODE 4160–01–S

DEPARTMENT OF HEALTH AND HUMAN SERVICES

Health Resources and Services Administration

Agency Information Collection Activities: Proposed Collection: Comment Request

In compliance with the requirement for opportunity for public comment on proposed data collection projects (section 3506(c)(2)(A) of Title 44, United States Code, as amended by the Paperwork Reduction Act of 1995, Public Law 104–13), the Health Resources and Services Administration (HRSA) publishes periodic summaries of proposed projects being developed for submission to OMB under the Paperwork Reduction Act of 1995. To request more information on the proposed project or to obtain copy of the data collection plans and draft instruments, call the HRSA Reports Clearance Officer on (301) 443–1129.

Comments are invited on: (a) Whether the proposed collection of information is necessary for the proper performance of the functions of the agency, including whether the information shall have practical utility; (b) the accuracy of the agency's estimate of the burden on the proposed collection of information; (c) ways to enhance the quality, utility, and clarity of the information to be collected; and (d) ways to minimize the burden of the collection of information on respondents, including through the use of automated collection techniques or other forms of information technology.

Proposed Project: AIDS Drug Assistance Program (ADAP): ADAP Monthly Client Utilization and Program Expenditures Report (OMB No. 0915–0219)—Extension

The Division of Service Systems (DSS)/Health Resources and Services Administration (HRSA) collects aggregated information on the number of clients being served by ADAPs, monthly expenditures by State ADAPs, and the purchase price of HIV/AIDS medications. State AIDS Drug Assistance Program (ADAPs), funded under the Title II of the Ryan White Comprehensive AIDS Resource Emergency (CARE) Act Amendments of 1996 and 2000. (Pub. L. 104–146), are designed to provide low income, uninsured, and underinsured individuals with access to HIV/AIDS medication that prevent serious deterioration of health arising from HIV disease, including the prevention and treatment of opportunistic infections.

During the last several years, there has been an increasing need for pharmaceuticals among uninsured and underinsured low income individuals who are HIV positive or diagnosed with AIDS. Due to the increasing demand, DSS/HRSA recognizes the importance of program planning and budget forecasting in order to maximize resources, and proposes to extend the current data collection from to collect relevant and client utilization data and program expenditure information from State ADAPs. This data collection effort is designed to allow DSS/HRSA (the funding agency) to continue monitoring nationwide trends in program growth, client utilization, expenditures and to assess the capacity of State ADAPs to maintain client services for clients throughout the fiscal year. The form will improve DSS/HRSA's ability to track the prices of HIV/AIDS drugs in order to ensure that State ADAPs are receiving the best price possible, to identify emerging issues and technical assistance needs and to share information among State ADAPs. It will also assist Title II grantees, State ADAPs, DSS/HRSA staff and policymakers at both the Federal and State level to understand the level of client demand for medications and the resources needed to meet those needs.

This report will collect time-specific data for the number of enrolled clients, the number of new clients, and the number of utilizing clients, the level of funds expended, and the price of HIV/AIDS drugs. A text box is provided to allow State ADAPs to report significant changes to their program, such as project budget shortfall, program restrictions, client waiting lists, a change in eligibility criteria, or formulary charges. On a quarterly basis, State ADAPs will report the purchase price paid on a select number of HIV pharmaceuticals dispensed by each program. DSS/HRSA will continue to compile summary reports that are distributed back to grantees and State ADAPs on a quarterly basis. The data collected is used to guide program planning, formulate budget recommendations, and monitor State ADAPs, especially monitoring the balance between an individual State ADAPs available resources against the client demand for medications. The burden estimates are as follows:

HRSA forms title II ADAP grantees	Number of respondents	Responses for respondent	Total responses	Hour per responses	Total burden hours
Client and Expenditures	54	12	648	0.75	486
Drug Pricing	54	4	216	0.75	162
Total	54		864		648

Send comments to Susan G. Queen, Ph.D, HRSA Reports Clearance Officer, Room 14–45, Parklawn Building, 5600 Fishers Lane, Rockville MD 20857. Written comments should be received within 60 days of this notice.

Dated: April 23, 2003.

Jane M. Harrison,

Director, Division of Policy Review and Coordination.

[FR Doc. 03–10877 Filed 5–1–03; 8:45 am]

BILLING CODE 4165–15–M

DEPARTMENT OF HEALTH AND HUMAN SERVICES

Indian Health Service

Mental Health and Community Safety Initiative for American Indian and Alaska Native Children, Youth, and Families

AGENCY: Indian Health Service, HHS.

ACTION: Notice of Funding Availability for Competitive Cooperative Agreements for the Mental Health and Community Safety Initiative for American Indian and Alaska Native (AI/AN) Children, Youth, and Families.

SUMMARY: The Indian Health Service (IHS) has developed the Mental Health and Community Safety Initiative (MHCSI) for American Indian/Alaska Native (AI/AN) Children, Youth, and Families. The IHS announces the availability of Fiscal Year (FY) 2003 funds for cooperative agreements to develop innovative strategies that focus on the mental health, behavioral, substance abuse, and community safety needs of AI/AN young people and their families who are involved or at risk of involvement with the juvenile justice system. This effort was first initiated through the White House Domestic Policy Council to provide federally recognized Tribes and eligible Tribal organizations with assistance to plan, design, and assess the feasibility of implementing a culturally appropriate system of care for AI/ANs. The MHCSI planning phase cooperative agreement program will not fund actual services. An important focus will be to integrate traditional healing methods indigenous to the communities with conventional treatment methodologies. These cooperative agreements are established under the authority of 25 U.S.C. 1621h(m). There will be only one funding cycle during Fiscal Year (FY) 2003. This program is described at 93.230 in the *Catalog of Federal Domestic Assistance.* These cooperative agreements will be awarded and administered in accordance with:

(a) This announcement;

(b) IHS regulations governing P.L. 94–437 grants and cooperative agreements at 42 CFR 36.101, *et seq.* and 25 U.S.C. 1621h(m);

(c) 45 CFR Part 92, ''Department of Health and Human Services, Uniform Administrative Requirements for Grants and Cooperative Agreements to State and Local Governments,'' or 45 CFR Part 74, ''Administration of Grants to Non-profit Recipients'';

(d) The Public Health Service (PHS) Grants Policy Statement; and

(e) Applicable Office of Management and Budget (OMB) Circulars. Executive Order 12372 requiring inter-governmental review is not applicable to this program.

The PHS urges applicants submitting strategic health plans to address specific objectives of *Healthy People 2010.* Potential applicants may obtain a printed copy of *Healthy People 2010* (Summary Report 017–001–00473–1) or CD–ROM, Stock No. 107–001–00549–5 through the Superintendent of Documents, Government Printing Office, P.O. Box 371954, Pittsburgh, PA 15250–7945, (202) 512–1800 or you may access this information at the following Web site: *www.healthypeople.gov.*

Smoke Free Workplace

The PHS strongly encourages all cooperative agreement recipients to provide a smoke-free workplace and promote the non-use of all tobacco products. This is consistent with the PHS mission to protect and advance the physical and mental health of the AI/AN people.

Fund Availability of and Period of Support

Approximately $400,000 is available in Fiscal Year 2003. Approximately 3–4 new awards will be granted. Applicants are not required to match or share in project costs if an award is made. The anticipated start date is September 1, 2003.

Planning Phase

Awards may be requested for up to three years. This announcement is a planning cooperative agreement and will not fund actual services. In the third year of the planning phase, the planning phase cooperative agreement recipients must submit an implementation phase application. Implementation phase funding will be awarded based on a limited competition among the eligible planning phase recipients. Awardees who demonstrate successful planning will be eligible for the five-year implementation cooperative agreement. Annual non-competitive continuation awards depend on the availability of funds and progress achieved.

Note: Successful completion of Phase 1 (the planning phase) is required to be considered for an implementation award.

Awards are to be used to develop or strengthen local infrastructures, capabilities, and collaborations that can lead to improved mental health and family service facilities and/or programs.

In this initial phase, MHSCI cooperative agreement applicants are required to address how they plan to:

(a) Support the development of wrap-around process program, or systems of care models that are designed by AI/AN community members to achieve their selected emotional, behavioral, educational, vocational, and spiritual outcomes for their children;

(b) Pub Tribes as well as eligible urban Indian organizations in a good position to secure funding to implement service systems, secure permanent sources of funding, and/or to enhance self-governance efforts;

(c) Develop a logic model for the system of care that will serve as the basis for developing the strategic plan for the project. The logic model should be least describe the context in which the system of care will be developed, the resources available for the systems of care, the activities that will support the development of the system of care, and the individual services and system outcomes expected from the system of care;

(d) Develop a strategic plan for implementation of the system of care throughout the three year federal funding period. The strategic plan should include a technical assistance plan that shows how training and technical assistance activities will be targeted to areas requiring further development within the systems of care;

(e) Hire key planning phase personnel;

(f) Establish the administrative team;

(g) Organize the governance body;

(h) Develop the approach for services integration and coordination that is appropriate for the target population; and

(i) Create the format for the individualized service plan that incorporates a full array of mental health and support services.

Due Dates

All applicants must submit one signed original and two complete copies of the final proposal with all required documentation. Mark the original application with a cover sheet that states, ''Original Cooperative Agreement Application.'' Mail the application to the Division of Acquisitions and Grants Management, Grants Management Branch, Indian Health Service, Twinbrook Metro Plaza, Suite 100, 12300 Twinbrook Parkway, Rockville, Maryland 20852, by 5 p.m., Eastern Standard Time, on July 11, 2003. Submissions must be made in hard copy format. Applicants are responsible for determining whether an application has been received by the Grants Management Branch. Applications are not available electronically.

Applications will be considered as meeting the deadline if they are either:

(1) Received on or before the deadline, with hand carried applications received by close of business 5 p.m.; or (2) Postmarked on or before the deadline and all materials received in time to be reviewed along with all other timely applications. A legibly dated receipt from a commercial

carrier or the U.S. Postal Service will be accepted in lieu of a postmark. Private metered postmarks will not be accepted as proof of timely mailing. Late applications not accepted for processing will be returned to the applicant and will not be considered for funding.

Hand Delivered Proposals—Hand delivered proposals will be accepted daily between the hours of 8 a.m. to 5 p.m. Eastern Standard Time, Monday through Friday. Proposals will not be accepted after 5 p.m. on July 11, 2003.

Additional Dates

(a) Application Review Date: July 28, 2003.

(b) Applicants Notified of Result: On or about August 15, 2003 (approved, recommended for approval but not funded, ineligible, or disapproved).

(c) Anticipated Start Date: On or about September 1, 2003.

Contacts for Assistance

If you have questions after reviewing the contents of all the documents, you may contact Crystal Ferguson, Grants Management Officer, Grants Management Branch, Division of Acquisitions and Grants Management, Indian Health Service, Twinbrook Parkway, Suite 100, Rockville, Maryland 20852, at (301) 443–5204, regarding business management technical questions or to obtain additional application kits. For programmatic technical assistance for the MHCSI program, contact Jamie Davis Hueston, Ph.D., Office of Public Health, Office of Clinical and Preventive Services, Division of Behavioral Health, 12300 Twinbrook Parkway, Suite 605; Rockville, MD 20852, at (301) 443–2038, Internet address: *JDAVIS@HQE.GOV.* The telephone numbers are not toll-free.

General Program Information

(a) Background

According to statistics provided by the IHS, of the 1.43 million Indians living on or near reservations, nearly 500,000 or 29% are under the age of 15. Homicide is the second leading cause of death among Indians from 1–14 years of age, and third for 1–24 year-olds. The suicide death rate for 15 to 24 year-old Indians is 2.4 times the corresponding rate for U.S., all races. A study by the National Household Survey on Drug Abuse indicated that the AI/AN population demonstrated the greatest illicit drug use of all racial/ethnic populations. According to the Federal Bureau of Prisons, although AI/ANs only represent 8% of the general population, 61% of the juveniles were in confinement. More than 180 gangs have been identified in AI/AN communities. Jurisdictional differences for troubled youth within the Tribal communities. Forty-five percent of Indian mothers have their first child before age 20, compared to 24% for U.S., all races. Increasingly the number of AI/AN youth involved with the juvenile justice system are found to have serious mental illness. Similarly, Department of Justice statistics indicate that more than 50% of the AI/AN children and youth involved in the juvenile justice system have been abused and/or neglected.

(b) Target Population

For purposes of the MHCSI cooperative agreement program, the target population is federally recognized and eligible AI/AN communities with substantial Tribal youth mental health and community safety issues, including such indicators of youth issues such as:

(1) Elevated rates of depression, behavorial problems, and suicide among the youth population;

(2) Substance abuse problems among the Tribal youth population;

(3) Low educational attainment and high drop-out rates;

(4) High levels of child abuse and family violence in the community; and

(5) High levels of juvenile crime, violence, and gang activity.

Age: Children and adolescents under the age of 18 years and their families.

Diagnosis: The child or adolescent at risk of or experiencing a serious emotional, behavorial, or mental disorder diagnosable under the Diagnostic and Statistical Manual IV (DSM IV).

Disabilities: The child or adolescent is in some way limited to the degree or level of functioning. Inability to perform in the family, school, and/or community is the basic factor which determines the need for services.

(c) Program Purpose

The MHCSI Program requires applicants to address and include specific information from one or both of the areas of focus: Child Abuse and Neglect (CAN) and/or Seriously Mentally Ill (SMI) as a part of their program description.

Area of Focus 1: Child Abuse and Neglect (CAN): Identifies and develops systems of care for victims of child abuse and neglect who are involved and/or at risk of being involved with the juvenile justice system.

Area of Focus 2: Seriously Mentally Ill (SMI): identifies and develops systems of care for children and youth with serious mental illness and are involved and/or at risk for being involved with the juvenile justice system.

The purpose of the MHCSI cooperative agreement is to target AI/AN children and youth involved with or at risk for involvement with the juvenile justice system and their families. Applicants should also identify children and youth with serious mental illness. This type of cooperative agreement should plan for establishing innovative demonstration programs for child protective services, child abuse prevention (including family violence prevention) programs, and education programs that are community based and culturally relevant as well as provide a ''system of care'' for the identified children, youth and their families. Tribes are required to identify, evaluate, and refer children and youth who are suspected or know to be SMI and to develop a ''system of care.''

Cooperative Agreement Activities

In conducting activities to achieve the purpose of this program the cooperative agreement recipient (Tribes or Tribal/urban Indian organization) will be responsible for the activities listed under A, and IHS will be responsible for activities listed under B.

(a) Cooperative Agreement Recipient Activities

Additional efforts would include, but not be limited to the following activities:

Planning, designing, and assessing

(1) Child abuse prevention (including family violence prevention programs);

(2) Multi-disciplinary child abuse investigation and prevention programs;

(3) Child protection codes and regulations;

(4) Training programs that highlight and/or provide community education on child abuse for juvenile justice staff (*e.g.,* detention staff, officers, and court staff, including judges, prosecutors, parole officers, etc.);

(5) Innovative and culturally relevant programs, projects, and services for AI/AN children and youth who are either involved with or at risk for becoming involved with the juvenile justice system; and

(6) Day services for AI/AN children and youth that improve case management as evidenced by a decrease in the number of psychiatric hospitalizations and an increase in the attainment of family and individual goals through participation in the treatment plan.

(b) IHS Activities

(1) IHS MHCSI project officers, and/or IHS contractor, will provide technical assistance and consultation to the cooperative agreement recipient on program planning, assessing, and designing of comprehensive ''wraparound'' programs focused on addressing mental health community safety needs;

(2) The IHS contractor will provide technical assistance oversight, regular conference calls, and annual site visits; and

(3) Depending on funding and need, IHS and the contractor will coordinate an annual training workshop for awardees to share lesson learned, successes, and strategies to reducing mental health and community safety needs in AI/AN communities.

Eligible Applicants

Any federally recognized Indian Tribe, Tribally sanctioned organization, or Indian population is eligible to apply for these cooperative agreements. For the purpose of this program, a Tribal organization can be a consortium or group of Tribes. Although there is no minimum population size required in order to apply, Tribes and Tribal organizations are encouraged to coordinated their applications with others to maximize the impact of cooperative agreement funding within AI/AN communities.

In addition, the funds available under the program are to develop or strengthen local infrastructure and capabilities in communities that have had difficulty in securing previous federal mental health funding (*i.e.,* grants, cooperative agreements) to develop mental health and community safety initiatives for children and families.

Documentation

Tribal Resolution: A resolution of the Indian Tribe served by the project must accompany the application submission. Applications that propose projects affecting more than one Indian Tribe must include resolutions from each Tribe to be served.

Applications from Tribal organizations will not require a specific Tribal resolution if the current Tribal resolution(s) under which they operate would encompass the proposed cooperative agreement activities. A copy of the current operational resolution must accompany the application.

A draft resolution is acceptable in lieu of an official resolution for purposes of submitting an application. (If you send a draft, please provide an approximate date regarding when it will come up for a vote.) If a current resolution or a draft is not submitted by the time of review, the application will be considered incomplete and will be returned without consideration. If a draft resolution is submitted, an official resolution must be sent to the Grants Management Branch office when it is passed. A cooperative agreement award will not be made until a final resolution is submitted from each Tribe involved with the project.

Award of Funds and Period of Support

(a) Award of Funds

Approximately 3–4 new awards will be made. Awards will range between $100,000 and $125,000, inclusive of direct and indirect costs depending on whether 3 or 4 cooperative agreements are awarded.

(b) Period of Support

Projects will be funded for a project period of 3 years. Continuation of a cooperative agreement for the second and third year is contingent on satisfactory performance by the recipient, availability of funding for the project, and continuing need of the agency for the project.

Application Kit

An application kit, including the required PHS 5161–1 (Rev. 7/00) (OMB Approval No. 0920–0428) and the U.S. Government Standard Forms (SF–424, SF–424A, and SF–424B), may be obtained by writing or calling the Division of Acquisitions and Grants Management, Grants Management Branch, IHS, Twinbrook Metro Plaza, Suite 100, 12300 Twinbrook Parkway, Rockville, MD 20852, at (301) 443–5204. (Note: this is not a toll free number.)

(a) Cooperative Agreement Application Lay Out Instructions

(1) Applications—All applications should be single-spaced and typewritten; using consecutively numbered pages; use black typeface not smaller than 12 characters per inch; one inch border margins; printed on only one side of standard size 8½″ x 11″ paper; have a narrative that does not exceed 10 typed] pages; and not be tabbed, glued, or placed in a plastic holder.

Excluded form the 10-page limit are the Standard Forms, Tribal Resolution(s), Abstract, Table of Contents, Budget Justifications, Multi-year Narratives for budget periods, and/or the Appendix.

(2) Include in the application the following documents, preferably in the order presented: Assistance Application Receipt Card, IHS–815–1A (Rev. 4/97).

(a) FY 2003 MHCSI Application Checklist;

(b) Standard Form 424, Application for Federal Assistance;

(c) Standard Form 424A, Budget Information Non-Construction Programs (pages 1 and 2);

(d) Standard Form 424B, Assurances Non-Construction Programs (front and back);

(e) PHS–5161 Checklist (pages 25–26);

(f) PHS–5161 Certifications (pages 17–19);

(g) Disclosure of Lobbying Activities;

(h) Current Tribal Resolution(s);

(i) A Project Abstract (may not exceed one typewritten page) should present a summary view of ''who-what-when-where-how-cost'' to determine acceptability for review;

(j) A Table of Contents to correspond with numbered pages;

(k) Project Narrative (items A–G below; may not exceed 10 typewritten pages);

(1) Background, Need for Assistance, and Capacity

(2) Project Goals and Objectives

(3) Management Controls

(4) Key Personnel

(5) Budget

(6) Evaluation

(7) Previous Grant or Cooperative Agreement Awards

(l) Categorical Budget Justification;

(m) Multi-year Narratives and Budget Justifications; and

(n) Appendix to include: Resumes of key staff, position descriptions for key staff, consultant proposed scope of work, current organizational chart, and current negotiated Indirect Cost Rate (if claimed).

Application Narrative Instructions, Evaluation Criteria, and Weights

The instructions for preparing the application narrative also constitute the evaluation criteria for reviewing and scoring the application. Weights assigned to each section are noted in parentheses.

Note: There are Separate Instructions and Weights Assigned.

Project Narrative: Describe the complete project in clear and concise language. Application reviewers may have little or no knowledge of the Tribe/Tribal organization. The Project Narrative should be organized as described in items A–G above and must address the following evaluation criteria:

(a) Background, Need for Assistance, and Capacity (25 points)

The application will be evaluated based on the extent to which the applicant:

(1) Describes and defines the target population at the project location (*e.g.,* Tribal population, number of CAN and/or SMI cases reported, number of cases prosecuted, number of children/families currently receiving treatment, number of children/families determined to be at risk), and identifies the information sources;

(2) Lists the number of CAN and/or SMI children and youth who are involved or at risk for becoming involved with the juvenile justice systems and specifies the source of information for all data that supports the need for program;

(3) Describes the existing resources and available resources, including the availability of AI/AN healing resources that will provide services to the target population and their families;

(4) Describes the needs of the target population and what efforts have been made in the past to meet the need, as applicable (*e.g.,* number of treatment providers, collaborative efforts and agreements with other treatment programs, availability of program funding from other sources);

(5) Summarizes the applicable standards, laws, regulations, and codes and

(6) Shows Tribal or organizational support for the proposed program.

(b) Program Goals and Objectives (30 points)

The application will be evaluated on the extent to which the applicant:

(1) Includes a clear description of the objectives and goals of the program and what is expected to be accomplished;

(2) Describes how the accomplishment of the objectives will be measured, including whether or not the program is replicable;

(3) Describes tasks and resources needed to implement and complete the project;

(4) Provides milestones or a time chart that indicates the time that the project will begin to accept clients;

(5) Defines the data collection mechanism for the project, how it will be obtained, analyzed, and maintained;

(6) Includes information in the data system that reflects the number and types of people served, services provided, client outcomes, client satisfaction, and associated costs;

(7) Describes how the data collection will support the stated objectives for the program and how it will support the evaluation of the program;

(8) Describes the evaluation methodology and related activities, describes how the effectiveness of the employed interventions will be monitored as well as the acceptance of the program within the community; and

(9) Develops a knowledge base of reliable and valid service system models that define the best outcomes for AI/AN children and their families, respecting the unique features of the culture of the target community (*e.g.* Northern Plains, Pueblo, Alaska Native village).

Further evaluation will be made of how well the applicant:

(1) Discusses the manner that allows the program services to continue after the cooperative agreement expires;

(2) Expresses willingness to share models of success with other communities and programs;

(3) Develops a cohesive and effective mental health service system that draws on Tribal, federal, State, local, and private resources, including traditional healers as determined by the community. The system of care must involve education, primary care, justice, child welfare, as well as behavioral health prevention and treatment; and

(4) Describes how data derived from the program will be used for improving the service system, increasing the quality of service delivery, developing system of care policies in the local community, and sustaining the system of care beyond the eight-year period of federal funding.

(c) Management Controls (15 points)

The application will be evaluated on the extent to which the applicant:

(1) Describes the project location, facilities, and available equipment;

(2) Describes the management controls of the recipient over the direction and acceptability of work to be performed;

(3) Describes the personnel and financial mechanisms to be utilized;

(4) Demonstrates that the organization has adequate systems and expertise to manage federal funds; and

(5) Includes a letter from the accounting firm with the results of the most recent financial audit for the organization.

(d) Key Personnel (10 points)

The application will be evaluated based on the extent to which the applicant:

(1) Provides a resume, qualifications, and position description for the program director and key personnel as described on page 22 of the PHS 5161;

(2) Identifies existing personnel and new program staff to be hired;

(3) Lists the qualifications and experience of consultants or contractors where the use is anticipated; and

(4) Identifies who will determine if the contracted work is acceptable and how the determination will be made.

(e) Budget (10 points)

The application will be evaluated based on the extent to which the applicant:

(1) Provides an itemized estimate of costs and a justification for the proposed program on SF 424A, Budget Information Non-Construction Programs;

(2) Allows for a narrative justification that describes the expenditures and the justification for the expenditures;

(3) Indicates special start-up costs;

(4) Includes a brief program narrative and budget for each additional year of funding requested; and

(5) Provides a statement that cooperative agreement funding may not be used to supplant existing public and private resources.

(f) Evaluation (10 points)

The application will be critiqued to the extent to which the applicant implements an evaluation protocol. Collaboration and coordination with local Tribal colleges or universities is highly encouraged. The application will be evaluated on the extent to which, the applicant:

(1) Describes the knowledge and experience of individuals with evaluation expertise available within the local community;

(2) Specifies the degree to which these individuals have specialized knowledge and experience about:

(i) Applied research and evaluation methods, as well as family and community study approaches;

(ii) Children's mental health services; and

(iii) Directing and supervising research and evaluation projects.

Application Consideration

Applications submitted by the closing date and verified by the postmark will undergo a review to determine that the:

(1) Applicant is eligible in accordance with the Eligibility and Documentation section of this announcement;

(2) Application narrative, forms, and materials submitted meet the requirements of the announcement and allow the review panel to undertake an in-depth evaluation; otherwise, the application will be returned to the applicant and the application is not a duplication of a previously funded project and the application complies with this announcement; otherwise it will be returned.

Competitive Review of Accepted Applicants

Applications meeting eligibility requirements that are complete, responsive, and conform to this program

announcement will be reviewed for merit by an Ad Hoc Objective Review Committee (ORC) appointed by the IHS to review and make recommendations on these applications. The review will be conducted in accordance with the PHS Objective Review Guidelines. The technical review process ensures selection of quality projects in a national competition for limited funding. Applications will be evaluated and rated on the basis of the five evaluation criteria listed above for the type of project submitted. These criteria are used to evaluate the quality of a proposed project, to assign a numerical score to each application, and to determine the likelihood of success. Applications scoring below 60 points will be disapproved. The scoring of approved applications will assist the IHS in determining which proposals will be funded if the amount MHCSI funding is not sufficient to support all approved applications.

Reporting Requirements

(1) Progress Reports

Program progress reports are required quarterly. A final progress and financial status report are also required at the end (within 90 days) of the project period. Evaluation results must be included in each required quarterly and final report. IHS program staff will use this information to determine progress of the recipient toward meeting its goals.

Suggested elements for required reports are:

(a) Description of activities conducted;

(b) Number of persons participating, what groups, organizations, etc., they represented;

(c) Emerging issues and consensus;

(d) Problems encountered, planned resolution or problems;

(e) Government Performance and Results Act and local evaluation findings during the reporting period; and

(f) Activities planned for the next quarter.

The final report must summarize information from the quarterly reports and describe the accomplishments of the project and planned next steps for implementing plans developed during the cooperative agreement period.

(2) Financial Status Reports

Semi-annual financial status reports must be submitted within 30 days after the end of each 6-month period. Final financial status reports are due within 90 days after expiration of the budget/project period. Standard Form 269 (long form) will be used for financial reporting.

Cooperative Agreement Administration Requirements

Cooperative agreements are administered in accordance with the following documents:

(1) 45 CFR part 92, ''Department of Health and Human Service, Uniform Administrative Requirements for Grants and Cooperative Agreements to State and Local Governments Including Indian Tribes,'' or 45 CFR part 74, ''Administration of Grants to Non-Profit Recipients.''

(2) PHS Policy Statement.

(3) Appropriate Cost Principles: OMB Circular A–87, ''State and Local Governments,'' or OMB Circular A–122, ''Non-profit Organizations.''

(4) OMB Circular A–133, ''Audits of States, Local Governments, and Non-Profit Organizations.''

Results of the Review

The recommendations of the objective review committee are forwarded to the Director, Office of Public Health, for a final review and approval. In addition to the objective review recommendations, the Director considers the program and business officials. After final decisions have been made on all applications, applicants will be notified of the results by August 15, 2003. Unsuccessful applicants will be notified in writing.

Successful applicants are notified through the official Notice of Grant Award (NGA) document. The NGA will state the amount of Federal funds awarded, the project and budget period, the effective date of the award, and the terms and conditions of the cooperative agreement.

Dated: April 21, 2003.

Charles W. Grim,

Assistant Surgeon General, Interim Director, Indian Health Service.

[FR Doc. 03–10884 Filed 5–1–03; 8:45 am]

BILLING CODE 4160–16–M

DEPARTMENT OF HEALTH AND HUMAN SERVICES

Substance Abuse and Mental Health Services Administration

Fiscal Year (FY) 2003 Funding Opportunity

AGENCY: Substance Abuse and Mental Health Services Administration, HHS.

ACTION: Notice of Funding Availability for SAMHSA Cooperative Agreements for Screening, Brief Intervention, Referral and Treatment.

SUMMARY: The Substance Abuse and Mental Health Services Administration (SAMHSA) Center for Substance Abuse Treatment (CSAT) announces the availability of FY 2003 funds for the cooperative agreements described below. A synopsis of this funding opportunity, as well as many other Federal Government funding opportunities, is also available at the Internet site: *www.fedgrants.gov.*

This notice is not a complete description of the program; potential applicants must obtain a copy of the Request for Applications (RFA), including Part I, Cooperative Agreements for Screening, Brief Intervention, Referral and Treatment, Part II, General Policies and Procedures Applicable to all SAMHSA Applications for Discretionary Grants and Cooperative Agreements, and the PHS 5161–1 (Rev. 7/00) application form before preparing and submitting an application.

Funding Opportunity Title: Cooperative Agreements for Screening, Brief Intervention, Referral and Treatment—Short Title: SBIRT.

Funding Opportunity Number: TI 03–009.

Catalog of Federal Domestic Assistance (CFDA) Number: 93.243.

Authority: Section: 509 of the Public Health Service Act, as amended and subject to the availability of funds.

Funding Opportunity Description: The Substance Abuse and Mental Health Services Administration (SAMHSA), Center for Substance Abuse Treatment is accepting applications for Fiscal Year 2003 cooperative agreements to expand and enhance State substance abuse treatment service systems by: Expanding the State's continuum of care to include screening, brief intervention, referral, and brief treatment (SBIRT) in general medical and other community settings (*e.g.*, community health centers, school-base health clinics and student assistance programs, occupational health clinics, hospitals, emergency departments); supporting clinically appropriate treatment services for nondependent substance users (*i.e.*, persons with a Substance Abuse Disorder diagnosis) as well as for dependent substance users (*i.e.*, persons with a Substance Dependence Disorder diagnosis); improving linkages among community agencies performing SBIRT and specialist substance abuse treatment agencies; and identifying systems and policy changes to increase access to treatment in generalist and specialist settings.

Eligible Applicants: All States, Territories, and Federally recognized Indian tribes are eligible to apply but the applicant must be the immediate Office of the Governor of States (for

Territories and Indian tribes, the Office of the Chief Executive Officer). The Governor must sign the application. Applications not signed by the Governor are not eligible and will not be reviewed. State-level agencies are not considered to be part of the immediate Office of the Governor and are not eligible to apply. This means, for example, that the State Substance Abuse Authority (SSA) or other State-level agencies within the Executive Branch cannot apply independently. SAMHSA has limited the eligibility to Governors of States because the immediate Office of the Governor has the greatest potential to provide the multi-agency leadership needed to develop the State's treatment service systems to increase the State's capacity to provide accessible, effective, screening, brief intervention, referral and brief treatment services to persons with Substance Use Disorders. States that have already begun to develop such integrated systems, stressing early intervention for persons at risk of dependence, are especially encouraged to apply.

Due Date for Applications: July 2, 2003.

Estimated Funding Available/Number of Awards: It is expected that approximately $22 million will be available for an estimated 7 State awards in FY 2003. The average annual award will range from $2,500,000 to $3,500,000 in total costs (direct and indirect). Applications with proposed budgets that exceed $3.5 million will be returned without review.

Is Cost Sharing Required: No.

Period of Support: Up to 5 years, with annual continuation awards depending on the availability of funds, progress achieved and compliance with the Government Performance and Results Act (GPRA) requirements.

How to Get Full Announcement and Application Materials: Complete application kits may be obtained from: The National Clearinghouse for Alcohol and Drug Information (NCADI) at 1–800–729–6686. The PHS 5161–1 application form and the full text of the funding announcement are also available electronically via SAMHSA's World Wide Web Home Page: *http://www.samhsa.gov* (Click on 'Grant Opportunities').

When requesting an application kit, the applicant must specify the funding opportunity title and number for which detailed information is desired. All information necessary to apply, including where to submit applications and application deadline instructions, are included in the application kit.

Contact for Additional Information: Herman I. Diesenhaus, Ph.D., Substance Abuse and Mental Health Services Administration, Center for Substance Abuse Treatment, 5600 Fishers Lane/ Rockwall II, 7th floor, Rockville, MD 20857, (301) 443–6575, E-mail: *hdiesenh@samhsa.gov* or Jean Donaldson, M.A., Substance Abuse and Mental Health Services Administration, Center for Substance Abuse Treatment, 5600 Fishers Lane/ Rockwall II, 7th floor, Rockville, MD 20857, (301) 443–6259, E-mail: *jdonalds@samhsa.gov.*

Dated: April 25, 2003.

Richard Kopanda,

Executive Officer, Substance Abuse and Mental Health Services Administration.

[FR Doc. 03–10876 Filed 5–1–03; 8:45 am]

BILLING CODE 4162–20–P

DEPARTMENT OF HOMELAND SECURITY

Federal Emergency Management Agency

Agency Information Collection Activities: Submission for OMB Review; Comment Request

AGENCY: Federal Emergency Management Agency, Emergency Preparedness and Response Directorate, Department of Homeland Security.

ACTION: Notice and request for comments.

SUMMARY: The Federal Emergency Management Agency has submitted the following proposed information collection to the Office of Management and Budget for review and clearance in accordance with the requirements of the Paperwork Reduction Act of 1995 (44 U.S.C. 3507).

Title: Citizen Corps Affiliate Program and Organizations Application.

Type of Information Collection: Extension of a currently approved collection.

OMB Number: 3067–0303 (transferred to the Department of Homeland Security under OMB Number 1660–0066).

Abstract: Citizen Corps requests information from not-for-profit and government groups that would like to support the Citizen Corps program through becoming affiliates. The requested information will ensure that Citizen Corps affiliates only with those programs and organizations capable of supporting its mission.

Affected Public: Not-for-profit institutions, and State, Local, and Tribal Governments.

Number of Respondents: 20.

Estimated Time per Respondent: 4 hours.

Estimated Total Annual Burden Hours: 80 hours.

Frequency of Response: On occasion.

Comments: Interested persons are invited to submit written comments on the proposed information collection to the Office of Management and Budget, Office of Information and Regulatory Affairs (*Attention:* Desk Officer for the Federal Emergency Management Agency, Emergency Preparedness and Response Directorate, Department of Homeland Security), Washington, DC 20503 within 30 days of the date of this notice.

FOR FURTHER INFORMATION CONTACT: Requests for additional information or copies of the information collection should be made to Muriel B. Anderson, Chief, Records Management Branch, Information Resources Management Division, Information Technology Services Directorate, Federal Emergency Management Agency, Emergency Preparedness and Response Directorate, Department of Homeland Security, 500 C Street, SW., Room 316, Washington, DC 20472, facsimile number (202) 646–3347, or e-mail address *InformationCollections@fema.gov.*

Dated: April 24, 2003.

Edward W. Kernan,

Division Director, Information Resources Management Division, Information Technology Services Directorate.

[FR Doc. 03–10843 Filed 5–1–03; 8:45 am]

BILLING CODE 6718–01–P

DEPARTMENT OF HOUSING AND URBAN DEVELOPMENT

[Docket No. FR–4809–N–18]

Federal Property Suitable as Facilities To Assist the Homeless

AGENCY: Office of the Assistant Secretary for Community Planning and Development, HUD.

ACTION: Notice.

SUMMARY: This Notice identifies unutilized, underutilized, excess, and surplus Federal property reviewed by HUD for suitability for possible use to assist the homeless.

FOR FURTHER INFORMATION CONTACT: Mark Johnston, room 7266, Department of Housing and Urban Development, 451 Seventh Street SW., Washington, DC 20410; telephone (202) 7078–1234; TTY number for the hearing- and speech-impaired (202) 708–2565 (these telephone numbers are not toll-free), or call the toll-free Title V information line at 1–800–927–7588.

SUPPLEMENTARY INFORMATION: In accordance with 24 CFR part 581 and

section 501 of the Steward B. McKinney Homeless Assistance Act (42 U.S.C. 11411), as amended, HUD is publishing this Notice to identify Federal buildings and other real property that HUD has reviewed for suitability for use to assist the homeless. The properties were reviewed using information provided to HUD by Federal landholding agencies regarding unutilized and underutilized buildings and real property controlled by such agencies or by GSA regarding its inventory of excess or surplus Federal property. This Notice is also published in order to comply with the December 12, 1988 Court Order in *National Coalition for the Homeless* v. *Veterans Administration,* No. 88–2503–OG (D.D.C.).

Properties reviewed are listed in this Notice according to the following categories: Suitable/available, suitable/unavailable, suitable/to be excess, and unsuitable. The properties listed in the three suitable categories have been reviewed by the landholding agencies, and each agency has transmitted to HUD: (1) Its intention to make the property available for use to assist the homeless, (2) its intention to declare the property excess to the agency's needs, or (3) a statement of the reasons that the property cannot be declared excess or made available for use as facilities to assist the homeless.

Properties listed as suitable/available will be available exclusively for homeless use for a period of 60 days from the date of this Notice. Where property is described as for ''off-site use only'' recipients of the property will be required to relocate the building to their own site at their own expense. Homeless assistance providers interested in any such property should send a written expression of interest to HHS, addressed to Shirley Kramer, Division of Property Management, Program Support Center, HHS, room 5B–41, 5600 Fishers Lane, Rockville, MD 20857; (301) 443–2265. (This is not a toll-free number.) HHS will mail to the interested provider an application packet, which will include instructions for completing the application. In order to maximize the opportunity to utilize a suitable property, providers should submit their written expressions of interest as soon as possible. For complete details concerning the processing of applications, the reader is encouraged to refer to the interim rule governing this program, 24 CFR part 581.

For properties listed as suitable/to be excess, that property may, if subsequently accepted as excess by GSA, be made available for use by the homeless in accordance with applicable law, subject to screening for other Federal use. At the appropriate time, HUD will publish the property in a Notice showing it as either suitable/available or suitable/unavailable.

For properties listed as suitable/unavailable, the landholding agency has decided that the property cannot be declared excess or made available for use to assist the homeless, and the property will not be available.

Properties listed as unsuitable will not be made available for any other purpose for 20 days from the date of this Notice. Homeless assistance providers interested in a review by HUD of the determination of unsuitability should call the toll free information line at 1–800–927–7588 for detailed instructions or write a letter to Mark Johnston at the address listed at the beginning of this Notice. Included in the request for review should be the property address (including zip code), the date of publication in the **Federal Register**, the landholding agency, and the property number.

For more information regarding particular properties identified in this Notice (*i.e.,* acreage, floor plan, existing sanitary facilities, exact street address), providers should contact the appropriate landholding agencies at the following addresses: *Army:* Ms. Julie Jones-Conte, Department of the Army, Office of the Assistant Chief of Staff for Installation Management, Attn: DAIM–MD, Room 1E677, 600 Army Pentagon, Washington, DC 20310–600; (703) 692–9223; *COE:* Ms. Shirley Middleswarth, Army Corps of Engineers, Civil Division, Directorate of Real Estate, 441 G Street, NW., Washington, DC 20314–1000; (202) 761–7425; *DOT:* Mr. Rugene Spruill, DOT Headquarters Project Team, Department of Transportation, 400 7th Street, SW., Room 10314, Washington, DC 20590; (202) 366–4246; *Energy:* Mr. Tom Knox, Department of Energy, Office of Engineering & Construction Management, CR–80, Washington, DC 20585; (202) 586–8715; *GSA:* Mr. Brian K. Polly, Assistant Commissioner, General Services Administration, Office of Property Disposal, 18th and F Streets, NW., Washington, DC 20405; (202) 501–0052; *Interior:* Ms. Linda Tribby, Acquisition & Property Management, Department of the Interior, 1849 C Street, NW., MS5512, Washington, DC 20240; (202) 219–0728; *Navy:* Mr. Charles C. Cocks, Director, Department of the Navy, Real Estate Policy Division, Naval Facilities Engineering Command, Washington Navy Yard, 1322 Patterson Ave., SE., Suite 1000, Washington, DC 20374–5065; (202) 685–9200 (These are not toll-free numbers).

Dated: April 24, 2003.

John D. Garrity,

Director, Office of Special Needs Assistance Programs.

Title V, Federal Surplus Property Program Federal Register Report for 5/2/03

Suitable/Available Properties

Buildings (by State)

Texas

Tract No. 105–70
San Antonio Mission
San Antonio Co: Bexar TX 78223–
Landholding Agency: Interior
Property Number: 61200320001
Status: Unutilized
Comment: 2056 sq. ft., most recent use—residential, historical significance, off-site use only

Land (by State)

Alaska

37.109 acres
U.S. Coast Guard
Gibson Cove Co: Kodiak AK
Landholding Agency: GSA
Property Number: 54200320001
Status: Surplus
Comment: Easements for highway, electrical and communication lines, historical landmark
GSA Number: 9–U–AK–783

Georgia

Land w/highway interchange
Fort Benning
I–185 and Hwy 27/280
Columbus Co: Muscogee GA 31905–
Landholding Agency: GSA
Property Number: 54200320002
Status: Excess
Comment: 113 acres—98 acres of this land encumbered by highway interchange
GSA Number: 4–D–GA–0872

North Carolina

Oak Island Light Tower
Caswell Beach Co: Brunswick NC 28465–
Landholding Agency: GSA
Property Number: 54200320003
Status: Excess
Comment: 5.36 acres w/light tower, endangered species and wetlands, controlled access
GSA Number: 4–U–NC–742

Texas

Former VORTAC Facility
Bridgeport Co: Wise TX
Landholding Agency: GSA
Property Number: 54200320006
Status: Surplus
Comment: 0.23 acres w/73.34 acres of easements, limited access
GSA Number: 7–U–TX–1072

Unsuitable Properties

Buildings (by State)

Alabama

Bldg. 03437
Redstone Arsenal
Redstone Arsenal Co: Madison AL 35898–5000
Landholding Agency: Army

Property Number: 21200320006
Status: Unutilized
Reasons: Secured Area; Extensive deterioration

Alaska

Bldgs. 1209, 1234, 1237, 1272
Fort Richardson
Ft. Richardson Co: AK 99505–6500
Landholding Agency: Army
Property Number: 21200320001
Status: Excess
Reasons: Extensive deterioration

Bldgs. 15182, 17112
Fort Richardson
Ft. Richardson Co: AK 99505–6500
Landholding Agency: Army
Property Number: 21200320002
Status: Excess
Reasons: Extensive deterioration

5 Bldgs.
Fort Richardson
17301, 17302, 17303, 17305, 17312
Ft. Richardson Co: AK 99505–6500
Landholding Agency: Army
Property Number: 21200320003
Status: Excess
Reason: Extensive deterioration

Bldgs. 18101, 19101
Fort Richardson
Ft. Richardson Co: AK 99505–6500
Landholding Agency: Army
Property Number: 21200320004
Status: Excess
Reason: Extensive deterioration

Bldgs. 1501, 1502
Fort Wainwright
Ft. Wainwright Co: AK 99505–6500
Landholding Agency: Army
Property Number: 21200320005
Status: Excess
Reason: Extensive deterioration

Warehouse
Naval Arctic Research Lab
Cape Sabine Co: AK
Landholding Agency: Navy
Property Number: 77200320001
Status: Excess
Reason: Extensive deterioration

Operations Bldg.
Naval Arctic Research Lab
Cape Sabine Co: AK
Landholding Agency: Navy
Property Number: 77200320002
Status: Excess
Reason: Extensive deterioration

Guam

Bldgs. 23, 25, 29
US Naval Ship Repair Facility
Marianas Co: GU
Landholding Agency: Navy
Property Number: 77200320003
Status: Unutilized
Reasons: Secured Area; Extensive deterioration

Bldgs. 31, 36, 38
US Naval Ship Repair Facility
Marianas Co: GU
Landholding Agency: Navy
Property Number: 77200320004
Status: Unutilized
Reasons: Secured Area; Extensive deterioration

Bldgs. 93–1, 94
US Naval Ship Repair Facility
Marianas Co: GU
Landholding Agency: Navy
Property Number: 77200320005
Status: Unutilized
Reasons: Secured Area; Extensive deterioration

Bldgs. 2001A, 2004
US Naval Ship Repair Facility
Marianas Co: GU
Landholding Agency: Navy
Property Number: 77200320006
Status: Unutilized
Reasons: Secured Area; Extensive deterioration

Bldgs. 2008, 2062
US Naval Ship Repair Facility
Marianas Co: GU
Landholding Agency: Navy
Property Number: 77200320007
Status: Unutilized
Reasons: Secured area; Extensive deterioration

Bldgs. 2010, 2013, 2028
US Naval Ship Repair Facility
Marianas Co: GU
Landholding Agency: Navy
Property Number: 77200320008
Status: Unutilized
Reasons: Secured Area; Extensive deterioration

Bldgs. 2039–2044
US Naval Ship Repair Facility
Marianas Co: GU
Landholding Agency: Navy
Property Number: 77200320009
Status: Unutilized
Reasons: Secured Area; Extensive deterioration

Bldg. 2049
US Naval Ship Repair Facility
Marianas Co: GU
Landholding Agency: Navy
Property Number: 77200320010
Status: Unutilized
Reasons: Secured Area; Extensive deterioration

Bldgs. 2053, 2054, 2055
US Naval Ship Repair Facility
Marianas Co: GU
Landholding Agency: Navy
Property Number: 77200320011
Status: Unutilized
Reasons: Secured Area; Extensive deterioration

Bldgs. 2061, 2068, 2069
US Naval Ship Repair Facility
Marianas Co: GU
Landholding Agency: Navy
Property Number: 77200320012
Status: Unutilized
Reasons: Secured Area; Extensive deterioration

Bldgs. 2070, 2071, 2074
US Naval Ship Repair Facility
Marianas Co: GU
Landholding Agency: Navy
Property Number: 77200320013
Status: Unutilized
Reasons: Secured Area; Extensive deterioration

Bldg. 2081
US Naval Ship Repair Facility
Marianas Co: GU
Landholding Agency: Navy
Property Number: 77200320014
Status: Unutilized
Reasons: Secured Area; Extensive deterioration

Bldgs. 2100, 2102
US Naval Ship Repair Facility
Marianas Co: GU
Landholding Agency: Navy
Property Number: 77200320015
Status: Unutilized
Reasons: Secured Area; Extensive deterioration

Hawaii

Bldgs. A0695, A0697
Schofield Barracks
Wahiawa Co: Honolulu HI 96786–
Landholding Agency: Army
Property Number: 21200320007
Status: Unutilized
Reason: Extensive deterioration

Bldg. A0698
Schofield Barracks
Wahiawa Co: Honolulu HI 96786–
Landholding Agency: Army
Property Number: 21200320008
Status: Unutilized
Reason: Extensive deterioration

Bldgs. A3010, H3010
Schofield Barracks
Wahiawa Co: Honolulu HI 96786–
Landholding Agency: Army
Property Number: 21200320009
Status: Unutilized
Reason: Extensive deterioration

Bldg. A0046
Fort Shafter
Honolulu Co: 96818–
Landholding Agency: Army
Property Number: 21200320010
Status: Unutilized
Reason: Extensive deterioration

Illinois

Bldgs. 111, 145
Col. Schulstad Memorial USARC
Arlington Heights Co: Cook IL 60005–2475
Landholding Agency: Army
Property Number: 21200320012
Status: Unutilized
Reason: Extensive deterioration

Indiana

Bldg. 300
Fort Benjamin Harrison
Indianapolis Co: Marion IN 46216–
Landholding Agency: Army
Property Number: 21200320011
Status: Unutilized
Reason: contamination

Kentucky

Bldgs. 01138, 01142, 01144
Fort Knox

Ft. Knox Co: Hardin KY 40121–
Landholding Agency: Army
Property Number: 21200320013
Status: Unutilized
Reason: Extensive deterioration

Bldgs. 04265, 04278
Fort Knox
Ft. Knox Co: Hardin KY 40121–
Landholding Agency: Army
Property Number: 21200320014
Status: Unutilized
Reason: Extensive deterioration

Bldg. 2912
Fort Campbell
Christian Co: KY 42223–
Landholding Agency: Army
Property Number: 21200320015
Status: Unutilized
Reason: Extensive deterioration

Bldgs. 3106, 3107, 3108
Fort Campbell
Christian Co: KY 42223–
Landholding Agency: Army
Property Number: 21200320016
Status: Unutilized
Reason: Extensive deterioration

Bldgs. 3107, 3112
Fort Campbell
Christian Co: KY 42223–
Landholding Agency: Army
Property Number: 21200320017
Status: Unutilized
Reason: Extensive deterioration

Bldg. 3601
Fort Campbell
Christian Co: KY 42223–
Landholding Agency: Army
Property Number: 21200320018
Status: Unutilized
Reason: Extensive deterioration

Bldgs. 5846, 5848
Fort Campbell
Christian Co: KY 42223–
Landholding Agency: Army
Property Number: 21200320019
Status: Unutilized
Reason: Extensive deterioration

Bldgs. 5852, 5854, 5856
Fort Campbell
Christian Co: KY 42223–
Landholding Agency: Army
Property Number: 21200320020
Status: Unutilized
Reason: Extensive deterioration

Bldgs. 5908, 5913, 5916
Fort Campbell
Christian Co: KY 42223–
Landholding Agency: Army
Property Number: 21200320021
Status: Unutilized
Reason: Extensive deterioration

Bldgs. 5918, 5920, 5922
Fort Campbell
Christian Co: KY 42223–
Landholding Agency: Army
Property Number: 21200320022
Status: Unutilized
Reason: Extensive deterioration

Bldg. 5926
Fort Campbell
Christian Co: KY 42223–
Landholding Agency: Army
Property Number: 21200320023
Status: Unutilized
Reason: Extensive deterioration

Maryland

Bldg. 00211
Curtis Bay Ordnance Depot
Baltimore Co: MD 21226–1790
Landholding Agency: Army
Property Number: 21200320024
Status: Unutilized
Reason: Extensive deterioration

Michigan

Buoy Shed
U.S. Coast Guard Station
Sault Ste. Marie Co: Chippewa MI 49783–9501
Landholding Agency: DOT
Property Number: 87200320001
Status: Excess
Reason: Secured Area

Missouri

Bldgs. 02200, 02205, 02223
Fort Leonard Wood
Ft. Leonard Wood Co: Pulaski Mo 65743–8944
Landholding Agency: Army
Property Number: 21200320025
Status: Unutilized
Reason: Extensive deterioration

Bldg. 05067
Fort Leonard Wood
Ft. Leonard Wood Co: Pulaski MO 65743–8944
Landholding Agency: Army
Property Number: 21200320026
Status: Unutilized
Reason: Extensive deterioration

Bldgs. 05237, 05238
Fort Leonard Wood
Ft. Leonard Wood Co: Pulaski MO 65743–8944
Landholding Agency: Army
Property Number: 21200320027
Status: Unutilized
Reason: Extensive deterioration

Bldgs. 05307, 05308
Fort Leonard Wood
Ft. Leonard Wood Co: Pulaski MO 65743–8944
Landholding Agency: Army
Property Number: 21200320028
Status: Unutilized
Reason: Extensive deterioration

Bldgs. 05353, 05381
Fort Leonard Wood
Ft. Leonard Wood Co: Pulaski MO 65743–8944
Landholding Agency: Army
Property Number: 21200320029
Status: Unutilized
Reason: Extensive deterioration

Bldg. 06126
Fort Leonard Wood
Ft. Leonard Wood Co: Pulaski MO 65743–8944
Landholding Agency: Army
Property Number: 21200320030
Status: Unutilized
Reason: Extensive deterioration

Bldg. 12706
Fort Leonard Wood
Ft. Leonard Wood Co: Pulaski MO 65743–8944
Landholding Agency: Army
Property Number: 21200320031
Status: Unutilized
Reason: Extensive deterioration

Bldgs. 13603, 13604
Fort Leonard Wood
Ft. Leonard Wood Co: Pulaski MO 65743–8944
Landholding Agency: Army
Property Number: 21200320032
Status: Unutilized
Reason: Extensive deterioration

New Jersey

Bldgs. T4440, P4460
Fort Dix
Ft. Dix Co: Burlington NJ 08640–5506
Landholding Agency: Army
Property Number: 21200320034
Status: Unutilized
Reason: Extensive deterioration

New York

Bldg. 00191
Fort Drum
Ft. Drum Co: Jefferson NY 13602–
Landholding Agency: Army
Property Number: 21200320035
Status: Unutilized
Reason: Extensive deterioration

Bldg. 00687
Fort Drum
Ft. Drum Co: Jefferson NY 13602–
Landholding Agency: Army
Property Number: 21200320036
Status: Unutilized
Reason: Extensive deterioration

Bldgs. 02314, 02315, 02316
Fort Drum
Ft. Drum Co: Jefferson NY 13602–
Landholding Agency: Army
Property Number: 21200320037
Status: Unutilized
Reason: Extensive deterioration

Bldgs. 21684, 21694
Fort Drum
Ft. Drum Co: Jefferson NY 13602–
Landholding Agency: Army
Property Number: 21200320038
Status: Unutilized
Reason: Extensive deterioration

Bldg. 21848
Fort Drum
Ft. Drum Co: Jefferson NY 13602–
Landholding Agency: Army
Property Number: 21200320039
Status: Unutilized
Reason: Extensive deterioration

Bldgs. 444, 445
Brookhaven National Lab
Upton Co: Suffolk NY 11973–
Landholding Agency: Energy
Property Number: 41200320001
Status: Excess
Reasons: Contamination; Extensive deterioration

Bldgs. 446, 447, 448
Brookhaven National Lab
Upton Co: Suffolk NY 11973–
Landholding Agency: Energy
Property Number: 41200320002
Status: Excess
Reasons: Contamination; Extensive deterioration

Bldg. 483
Brookhaven National Lab
Upton Co: Suffolk NY 11973–

Landholding Agency: Energy
Property Number: 41200320003
Status: Excess
Reason: Contamination

North Carolina

Bldg. 14
Military Ocean Terminal
Southport Co: Brunswick NC 28461–
Landholding Agency: Army
Property Number: 21200320033
Status: Excess
Reason: Extensive deterioration

10 Facilities
Wilkes County Recreation Area
Wilkesboro Co: NC
Landholding Agency: COE
Property Number: 31200320001
Status: Unutilized
Reason: Extensive deterioration

Ohio

61 Bldgs.
Ravenna Army Ammo Plant
Misc/Load Line 9, 2, 3, 4, 7, 10
Ravenna Co: Portage OH 44266–9297
Landholding Agency: Army
Property Number: 21200320040
Status: Excess
Reasons: Within 2000 ft. of flammable or explosive material; Secured Area; Extensive deterioration.

21 Bldgs.
Ravenna Army Ammo Plant
Load Line 11
Ravenna Co: Portage OH 44266–9297
Landholding Agency: Army
Property Number: 21200320041
Status: Excess
Reasons: Within 2000 ft. of flammable or explosive material; Secured Area; Extensive deterioration.

19 Bldgs.
Ravenna Army Ammo Plant
Load Line 8
Ravenna Co: Portage OH 44266–9297
Landholding Agency: Army
Property Number: 21200320042
Status: Excess
Reasons: Within 2000 ft. of flammable or explosive material; Secured Area; Extensive deterioration.

24 Bldgs.
Ravenna Army Ammo Plant
Load Line 7
Ravenna Co: Portage OH 44266–9297
Landholding Agency: Army
Property Number: 21200320043
Status: Excess
Reasons: Within 2000 ft. of flammable or explosive material; Secured Area; Extensive deterioration.

23 Bldgs.
Ravenna Army Ammo Plant
Load Line 5
Ravenna Co: Portage OH 44266–9297
Landholding Agency: Army
Property Number: 21200320044
Status: Excess
Reasons: Within 2000 ft. of flammable or explosive material; Secured Area; Extensive deterioration.

30 Bldgs.
Ravenna Army Ammo Plant
Load Line 4
Ravenna Co: Portage OH 44266–9297
Landholding Agency: Army
Property Number: 21200320045
Status: Excess
Reasons: Within 2000 ft. of flammable or explosive material; Secured Area; Extensive deterioration.

Oregon

Federal Building
256 Warner-Milne Road
Oregon City Co: OR 97045–
Landholding Agency: GSA
Property Number: 54200320004
Status: Surplus
Reason: Within 2000 ft. of flammable or explosive material GSA Number: 9–G–OR–740

Coos Head Air National Guard S.
Charleston Co: OR
Landholding Agency: GSA
Property Number: 54200320005
Status: Excess
Reasons: Within 2000 ft. of flammable or explosive material; Extensive deterioration,
GSA Number: 9–D–OR–538E

South Carolina

17 Bldgs. Naval Weapons Station
Goose Creek Co: Berkeley SC 29445–
Landholding Agency: Navy
Property Number: 77200320017
Status: Unutilized
Reasons: Within 2000 ft. of flammable or explosive material; Secured Area

Tennessee

Bldgs. 2180, 2429
Fort Campbell
Montgomery Co: TN 42223–
Landholding Agency: Army
Property Number: 21200320046
Status: Unutilized
Reason: Extensive deterioration

Bldgs. 2517, 2519
Fort Campbell
Montgomery Co: TN 42223–
Landholding Agency: Army
Property Number: 21200320047
Status: Unutilized
Reason: Extensive deterioration

Bldgs. 2531, 2533, 2535
Fort Campbell
Montgomery Co: TN 42223–
Landholding Agency: Army
Property Number: 21200320048
Status: Unutilized
Reason: Extensive deterioration

Bldgs. 2550, 2552, 2554
Fort Campbell
Montgomery Co: TN 42223–
Landholding Agency: Army
Property Number: 21200320049
Status: Unutilized
Reason: Extensive deterioration

Bldgs. 2615, 2617, 2636
Fort Campbell
Montgomery Co: TN 42223–
Landholding Agency: Army
Property Number: 21200320050
Status: Unutilized
Reason: Extensive deterioration

Bldgs. 2625, 2627, 2746
Fort Campbell
Montgomery Co: TN 42223–
Landholding Agency: Army
Property Number: 21200320051
Status: Unutilized
Reason: Extensive deterioration

Bldgs. 2642, 2646, 2648
Fort Campbell
Montgomery Co: TN 42223–
Landholding Agency: Army
Property Number: 21200320052
Status: Unutilized
Reason: Extensive deterioration

Bldgs. C–1, C–3, C–5, C–7, C–9
Holston Army Ammo Plant
Kingsport Co: Hawkins TN 37660–
Landholding Agency: Army
Property Number: 21200320053
Status: Excess
Reasons: Within 2000 ft. of flammable or explosive material; Secured Area; Extensive deterioration

Bldgs. D–1, D–2, D–6, thru D–10
Holston Army Ammo Plant
Kingsport Co: Hawkins TN 37660–
Landholding Agency: Army
Property Number: 21200320054
Status: Excess
Reasons: Within 2000 ft. of flammable or explosive material; Secured Area; Extensive deterioration

6 Bldgs.
Holston Army Ammo Plant
E–1, E–2, E–5, E–7 thru E–9
Kingsport Co: Hawkins TN 37660–
Landholding Agency: Army
Property Number: 21200320055
Status: Excess
Reasons: Within 2000 ft. of flammable or explosive material; Secured Area; Extensive deterioration

Bldgs. G–1, G–2, G–3, G–9
Holston Army Ammo Plant
Kingsport Co: Hawkins TN 37660–
Landholding Agency: Army
Property Number: 21200320056
Status: Excess
Reasons: Within 2000 ft. of flammable or explosive material; Secured Area; Extensive deterioration

5 Bldgs.
Holston Army Ammo Plant
H–1, thru H–3, H–9, H–10
Kingsport Co: Hawkins TN 37660–
Landholding Agency: Army
Property Number: 21200320057
Status: Excess
Reasons: Within 2000 ft. of flammable or explosive material; Secured Area; Extensive deterioration

5 Bldgs.
Holston Army Ammo Plant
I–1, I–2, I–7, I–8, I–9
Kingsport Co: Hawkins TN 37660–
Landholding Agency: Army
Property Number: 21200320058
Status: Excess
Reasons: Within 2000 ft. of flammable or explosive material; Secured Area; Extensive deterioration

Bldgs. K–1, K–7, K–9
Holston Army Ammo Plant
Kingsport Co: Hawkins TN 37660–
Landholding Agency: Army
Property Number: 21200320059
Status: Excess
Reasons: Within 2000 ft. of flammable or explosive material; Secured Area; Extensive deterioration

Bldgs. L–1M, L–2, L–9
Holston Army Ammo Plant
Kingsport Co: Hawkins TN 37660–
Landholding Agency: Army
Property Number: 21200320060
Status: Excess
Reasons: Within 2000 ft. of flammable or explosive material; Secured Area; Extensive deterioration

Bldgs. O–1, O–7, O–9
Holston Army Ammo Plant
Kingsport Co: Hawkins TN 37660–
Landholding Agency: Army
Property Number: 21200320061
Status: Excess
Reasons: Within 2000 ft. of flammable or explosive material; Secured Area; Extensive deterioration

Bldgs. J–2, J–6 thru J–9
Holston Army Ammo Plant
Kingsport Co: Hawkins TN 37660–
Landholding Agency: Army
Property Number: 21200320062
Status: Excess
Reasons: Within 2000 ft. of flammable or explosive material; Secured Area; Extensive deterioration.

Bldgs. M–2, M–7, M–9
Holston Army Ammo Plant
Kingsport Co: Hawkins TN 37660–
Landholding Agency: Army
Property Number: 21200320063
Status: Excess
Reasons: Within 2000 ft. of flammable or explosive material; Secured Area; Extensive deterioration.

Bldgs. U–2
Holston Army Ammo Plant
Kingsport Co: Hawkins TN 37660–
Landholding Agency: Army
Property Number: 21200320064
Status: Excess
Reasons: Within 2000 ft. of flammable or explosive material; Secured Area; Extensive deterioration.

Bldgs. P–3, P–7
Holston Army Ammo Plant
Kingsport Co: Hawkins TN 37660–
Landholding Agency: Army
Property Number: 21200320065
Status: Excess
Reasons: Within 2000 ft. of flammable or explosive material; Secured Area; Extensive deterioration.

Bldgs. 4, A–5, B–5, B–9
Holston Army Ammo Plant
Kingsport Co: Hawkins TN 37660–
Landholding Agency: Army
Property Number: 21200320066
Status: Excess
Reasons: Within 2000 ft. of flammable or explosive material; Secured Area; Extensive deterioration.

Bldgs. C–6, N–9, N–10, V–10
Holston Army Ammo Plant
Kingsport Co: Hawkins TN 37660–
Landholding Agency: Army
Property Number: 21200320067
Status: Excess
Reasons: Within 2000 ft. of flammable or explosive material; Secured Area; Extensive deterioration.

Bldgs. A14, A20, A28
Holston Army Ammo Plant
Kingsport Co: Hawkins TN 37660–
Landholding Agency: Army
Property Number: 21200320068
Status: Excess
Reasons: Within 2000 ft. of flammable or explosive material; Secured Area; Extensive deterioration.

Bldgs. 109, 152
Holston Army Ammo Plant
Kingsport Co: Hawkins TN 37660–
Landholding Agency: Army
Property Number: 21200320069
Status: Excess
Reasons: Within 2000 ft. of flammable or explosive material; Secured Area; Extensive deterioration.

5 Bldgs.
Holston Army Ammo Plant 209, 221, 222, 228, 230
Kingsport Co: Hawkins TN 37660–
Landholding Agency: Army
Property Number: 21200320070
Status: Excess
Reasons: Within 2000 ft. of flammable or explosive material; Secured Area; Extensive deterioration.

4 Bldgs.
Holston Army Ammo Plant 301, 303B, 304, 312
Kingsport Co: Hawkins TN 37660–
Landholding Agency: Army
Property Number: 21200320071
Status: Excess
Reasons: Within 2000 ft. of flammable or explosive material; Secured Area; Extensive deterioration.

4 Bldgs.
Holston Army Ammo Plant 333, 336, 343, 345
Kingsport Co: Hawkins TN 37660–
Landholding Agency: Army
Property Number: 21200320072
Status: Excess
Reasons: Within 2000 ft. of flammable or explosive material; Secured Area; Extensive deterioration.

Bldgs. 401, 408
Holston Army Ammo Plant
Kingsport Co: Hawkins TN 37660–
Landholding Agency: Army
Property Number: 21200320073
Status: Excess
Reasons: Within 2000 ft. of flammable or explosive material; Secured Area; Extensive deterioration.

Bldgs. 549, 558
Holston Army Ammo Plant
Kingsport Co: Hawkins TN 37660–
Landholding Agency: Army
Property Number: 21200320074
Status: Excess
Reasons: Within 2000 ft. of flammable or explosive material; Secured Area; Extensive deterioration.

Texas

Bldgs. 1378, 2019
Fort Bliss
El Paso Co: TX 79916–
Landholding Agency: Army
Property Number: 21200320075
Status: Unutilized
Reason: Extensive deterioration.

Bldgs. 2650, 2651
Fort Bliss
El Paso Co: TX 79916–
Landholding Agency: Army
Property Number: 21200320076
Status: Unutilized
Reason: Extensive deterioration.

Bldgs. 9814, 9866, 9887
Fort Bliss
El Paso Co: TX 79916–
Landholding Agency: Army
Property Number: 21200320077
Status: Unutilized
Reason: Extensive deterioration.

4 Bldgs.
Fort Bliss
9890, 9892, 9893, 9894
El Paso Co: TX 79916–
Landholding Agency: Army
Property Number: 21200320078
Status: Unutilized
Reason: Extensive deterioration.

Bldg. 9901
Fort Bliss
El Paso Co: TX 79916–
Landholding Agency: Army
Property Number: 21200320079
Status: Unutilized
Reason: Extensive deterioration.

Virginia

4 Bldgs.
Fort Pickett
T2212, T2213, T2214, T2215
Blackstone Co: Nottoway VA 23824–
Landholding Agency: Army
Property Number: 21200320080
Status: Unutilized
Reason: Extensive deterioration.

5 Bldgs.
Fort Pickett
T2221, T2222, T2223, T2224, T2228
Blackstone Co: Nottoway VA 23824–
Landholding Agency: Army
Property Number: 21200320081
Status: Unutilized
Reason: Extensive deterioration.

Bldgs. T2602, T2619
Fort Pickett
Blackstone Co: Nottoway VA 23824–
Landholding Agency: Army
Property Number: 21200320082
Status: Unutilized
Reason: Extensive deterioration.

4 Bldgs.
Fort Pickett
T2640, T2641, T2645, T2651
Blackstone Co: Nottoway VA 23824–
Landholding Agency: Army
Property Number: 21200320083
Status: Unutilized
Reason: Extensive deterioration.

6 Bldgs.
Fort Pickett
T2800, T2801, T2803, T2808, T2809, T2810
Blackstone Co: Nottoway VA 23824–
Landholding Agency: Army
Property Number: 21200320084
Status: Unutilized
Reason: Extensive deterioration.

3 Bldgs.
Fort Pickett
T2824, T2830, T2831
Blackstone Co: Nottoway VA 23824–
Landholding Agency: Army
Property Number: 21200320085
Status: Unutilized

Reason: Extensive deterioration.

5 Bldgs.
Fort Pickett
T2832, T2834, T2835, T2839, T2840
Blackstone Co: Nottoway VA 23824–
Landholding Agency: Army
Property Number: 21200320086
Status: Unutilized
Reason: Extensive deterioration.

3 Bldgs.
Fort Pickett
T2843, T2844, T2845
Blackstone Co: Nottoway VA 23824–
Landholding Agency: Army
Property Number: 21200320087
Status: Unutilized
Reason: Extensive deterioration.

Bldg. T0113
Fort AP Hill

Bowling Green Co: VA 22427–
Landholding Agency: Army
Property Number: 21200320088
Status: Unutilized
Reason: Extensive deterioration.

Bldg. T0114
Fort AP Hill
Bowling Green Co: VA 22427–
Landholding Agency: Army
Property Number: 21200320089
Status: Unutilized
Reason: Extensive deterioration

Bldg. T0114
Fort AP Hill
Bowling Green Co: VA 22427–
Landholding Agency: Army
Property Number: 21200320090
Status: Unutilized
Reason: Extensive deterioration

Bldg. 584
Langley Air Force Base
Hampton Co: VA 23665–
Landholding Agency: GSA
Property Number: 54200320007
Status: Excess
Reason: Secured Area
GSA Number: 4–Z–VA–740–B

Bldg. 720
Langley Air Force Base
Hampton Co: VA 23665–
Landholding Agency: GSA
Property Number: 54200320008
Status: Excess
Reason: Secured Area
GSA Number: 4–Z–VA–740–A

Bldg. 1443/adj. bldg.
Norfolk Naval Shipyard
Portsmouth Co: VA 23704–
Landholding Agency: Navy
Property Number: 77200320018
Status: Excess
Reason: Extensive deterioration

Washington

Bldg. A1001
Fort Lewis
Ft. Lewis Co: Pierce WA 98443–
Landholding Agency: Army
Property Number: 21200320091
Status: Unutilized
Reason: Extensive deterioration

Bldg. 09778
Fort Lewis
Ft. Lewis Co: Pierce WA 98433–9500
Landholding Agency: Army
Property Number: 21200320092
Status: Unutilized
Reason: Extensive deterioration

Land (by State)

New Jersey

2.1 acres
Naval Weapons Station
Earle Co: NJ
Landholding Agency: Navy
Property Number: 77200320016
Status: Excess
Reason: Secured Area

[FR Doc. 03–10561 Filed 5–1–03; 8:45 am]

BILLING CODE 4210–29–M

DEPARTMENT OF THE INTERIOR

Bureau of Land Management

[CA–338–1220–AF]

Supplementary Rules: King Range National Conservation Area, Humboldt and Mendocino Counties, CA

AGENCY: Bureau of Land Management, Interior.

ACTION: Establishment of emergency final supplementary rules.

SUMMARY: The Arcata Field Office is establishing the following emergency final supplementary rules for the King Range National Conservation Area (KRNCA) as provided for under the Visitor Services regulations of the Bureau of Land Management (BLM). The supplementary rules require all backcountry overnight users camping on BLM-administered public lands within the boundaries of the KRNCA to carry and use hard-sided bear-proof food storage canisters. The supplementary rules are necessary to protect the safety, health, and welfare of persons, property, and wildlife.

EFFECTIVE DATE: May 2, 2003.

ADDRESSES: You may send inquiries or suggestions to Field Office Manager, Bureau of Land Management, Arcata Field Office, 1695 Heindon Rd., Arcata, CA 95521.

FOR FURTHER INFORMATION CONTACT: Lynda J. Roush, (707) 825–2300.

SUPPLEMENTARY INFORMATION:

I. Background

The emergency final supplementary rules are authorized by 43 CFR 8365.1–6: ''The State Director may establish such supplementary rules as he/she deems necessary. These rules may provide for the protection of persons, property, and public lands and resources.''

The purpose of these emergency final supplementary rules is to prevent—

- Injury to backcountry users,
- Damage to their property,
- Additional bears learning to associate humans with food, and
- The need for destruction of ''problem bears.''

The reason that the supplemental rules are being published on an emergency final basis is the high risk of human injury if steps are not implemented immediately to remedy the problem. For this reason, we find good cause under the Administrative Procedure Act (5 U.S.C. 553 *et seq.*) for publishing and promulgating these supplementary rules without soliciting public comment, and making them effective the date of publication.

BLM staff and visitors camping in the KRNCA backcountry are experiencing increasingly frequent incidents of black bears entering occupied campsites and tents in search of food, stealing backpacks and damaging equipment, and presenting an increasing risk of injury to humans. Bear/human interactions in the KRNCA have been steadily increasing for the past several years, despite active public education efforts and the implementation of a voluntary, low-cost bear-proof backpacking food storage canister rental program in 2000. These incidents have increased significantly in frequency and intensity in the spring of 2002 to the point where the possibility of injuries to humans will become high without BLM taking immediate steps to change bear behavior. Bear/human contacts have been most common in the central portion of the Lost Coast Trail (LCT), although bear/human contacts are being documented at other locations in the KRNCA as well. Backpacks and equipment have been damaged, destroyed, and/or stolen, and at least 3 incidents of bears ripping into human-occupied tents have been reported. Hanging food from trees is no longer an effective method for bear-proof food storage, as bears have become very adept at climbing trees and removing the stored food. Most backpackers without proper food storage canisters have lost their food.

Unprotected food also attracts raccoons, skunks, rodents, and other wildlife, which become nuisances and whose own health can be compromised if they become accustomed to human food.

The King Range National Conservation Area, particularly along the Lost Coast, is receiving steadily increasing visitation. Experience with black bears in similar backcountry areas indicate that close human/bear contacts are likely to increase, with the risk of injuries to humans imminent unless

proper steps are taken to reverse the situation. A review of the bear-management practices of Department of the Interior facilities (Yosemite, Kings Canyon, and Sequoia National Parks) and the U.S. Forest Service with similar bear/human management problems, and consultation with the California Department of Fish and Game indicates that the consistent use of hard-sided bear-proof food storage canisters is the most reliable method to keep bears from associating humans and their equipment as a source of food. Field experience at other sites has demonstrated that a key feature of an effective bear management program is the mandatory backcountry use of bear-proof food storage canisters, with as close to 100 percent compliance as possible. Implementation of the supplementary rules will require mandatory use of hard-sided bear-proof food storage canisters in all backcountry locations within the KRNCA.

II. Discussion of the Emergency Final Supplementary Rules

The canisters required by the supplementary rules must be of sufficient size to permit storage of all food, toiletries, sunscreen, surfboard wax, insect repellant and other scented items for the duration of the trip. Each person must posses a minimum of one canister, and must use the canister to store the above types of items, plus any food scraps and scented trash items such as empty cans, energy/candy wrappers, surf wax wrappers, etc. For the purposes of this rule, a ''backcountry'' location is defined as any place outside of a developed campground where food and other scented items cannot be stored inside a locked vehicle. Also, ''hard sided'' means the container is made of rigid material and is of a size and shape that bears cannot grasp by the mouth or paws, or otherwise carry for any significant distance. The container must also have a closing and latching lid that is tested and proven effective against bears. Stock users must use either portable bear canisters or bear-proof panniers of sufficient size to store materials for all party members for the duration of the trip. These emergency final supplementary rules do not apply to overnight use within designated campgrounds or camping near vehicles where food can be stored and locked inside vehicles.

The requirement for one canister per person minimum is based on experience and observations that show the sharing of canisters by multiple visitors does not provide enough storage space for food, toiletries, and all other items with odors. Consequently, some items are left out of the canisters and the program becomes ineffective. Public compliance with this rule will break the association of humans with an easy food source by black bears. Strict compliance with this requirement is essential, as each successful food acquisition by bears from human sources is a strong positive reinforcement of undesirable black bear behavior.

With the implementation of the emergency final supplementary rules, BLM will take actions to make compliance for visitors as easy as possible. For visitors who do not want to purchase their own canisters (canisters are widely available for sale at outdoor stores in California), an existing canister rental program through local merchants in Petrolia and Shelter Cove will be expanded to include new locations at the BLM King Range Project Office, and the Arcata Field Office. Implementation will also include an extensive public education component to encourage compliance, utilizing a variety of local and regional media. The emergency final supplementary rules do not apply to camping within designated campgrounds or camping near vehicles where food can be stored inside locked vehicles.

III. Procedural matters

Executive Order 12866, Regulatory Planning and Review

These emergency final supplementary rules do not constitute a significant regulatory action and are not subject to review by the Office of Management and Budget under Executive Order 12866. These supplementary rules will not have an effect of $100 million or more on the economy. They will not affect commercial activity, except to the extent that they promote the sale or rental of bear-proof canisters, but contain rules of conduct for overnight public use of backcountry recreational areas within the KRNCA. They will not adversely affect, in a material way, the economy, productivity, competition, jobs, the environment, public health or safety, or State, local, or tribal governments or communities. These emergency final supplementary rules will not create a serious inconsistency or otherwise interfere with an action taken or planned by another agency. The emergency final supplementary rules do not alter the budgetary effects of entitlements, grants, user fees, or loan programs or the right or obligations of their recipients; nor do they raise novel legal or policy issues.

National Environmental Policy Act

BLM has prepared an environmental assessment (EA) and has found that the emergency final supplementary rules do not constitute a major Federal action significantly affecting the quality of the human environment under section 102(2)(C) of the Environmental Protection Act of 1969 (NEPA), 42 U.S.C. 4332(2)(C). The supplementary rules merely contain rules of conduct for certain recreational lands in California. These rules are designed to protect public health and safety as well as the health and welfare of endemic wildlife. A detailed statement under NEPA is not required. BLM has placed the EA and the Finding of No Significant Impact on file in the BLM Administrative Record at the address specified in the **ADDRESSES** section. BLM invites the public to review these documents.

Regulatory Flexibility Act

Congress enacted the Regulatory Flexibility Act of 1980, as amended, 5 U.S.C. 601–612, to ensure that Government regulations do not unnecessarily or disproportionately burden small entities. The RFA requires a regulatory flexibility analysis if a rule would have a significant economic impact, either detrimental or beneficial, on a substantial number of small entities. The emergency final supplementary rules do not pertain specifically to commercial or governmental entities of any size, but to public recreational use of specific public lands, although the rules will tend to promote sales of certain equipment to campers and backpackers, including sales from small business entities. Therefore, BLM has determined under the RFA that this emergency final supplementary rules would not have a significant economic impact on a substantial number of small entities.

Small Business Regulatory Enforcement Fairness Act (SBREFA)

These emergency final supplementary rules do not constitute a ''major rule'' as defined at 5 U.S.C. 804(2). Again, the emergency final supplementary rules merely contain rules of conduct for recreational use of certain public lands. The emergency final supplementary rules have negligible effect on business commercial or industrial use of the public lands. Commercial recreation outfitters, operating under Special Recreation Permit stipulations, are required to provide (or rent currently for $5/canister/trip) bear-proof canisters for commercial backcountry trips to the King Range. BLM currently provides

local small businesses bear-proof canisters to rent, and they keep the $5/trip rental charge as cost for handling the canisters and administering the program.

Unfunded Mandates Reform Act

These emergency final supplementary rules do not impose an unfunded mandate on State, local, or tribal governments or the private sector of more than $100 million per year; nor do the supplementary rules have a significant or unique effect on State, local, or tribal governments or the private sector. The supplementary rules do not require anything of State, local, or tribal governments. Therefore, BLM is not required to prepare a statement containing the information required by the Unfunded Mandates Reform Act (2 U.S.C. 1531 *et seq.*).

Executive Order 12630, Governmental Actions and Interference With Constitutionally Protected Property Rights (Takings)

The emergency final supplementary rules do not represent a government action capable of interfering with constitutionally protected property rights. The emergency final supplementary rules do not address property rights in any form, and do not cause the impairment of any persons' property rights. Therefore, the Department of the Interior has determined that the emergency final supplementary rules will not cause a taking of private property or require further discussion of takings implications under this Executive Order.

Executive Order 13132, Federalism

The emergency final supplementary rules will not have a substantial direct effect on the States, on the relationship between the national government and the States, or on the distribution of power and responsibilities among the various levels of government. The supplementary rules affect land in only one State, California, and do not address jurisdictional issues involving the California State government. Therefore, in accordance with Executive Order 13132, BLM has determined that these emergency final supplementary rules do not have sufficient federalism implications to warrant preparation of a federalism assessment.

Executive Order 12988, Civil Justice Reform

Under Executive Order 12988, BLM has determined that these emergency final supplementary rules will not unduly burden the judicial system and that they meet the requirements of sections 3(a) and 3(b)(2) of the Executive Order.

Paperwork Reduction Act

These emergency final supplementary rules do not contain information collection requirements that the Office of Management and Budget must approve under the Paperwork Reduction Act, 44 U.S.C. 3501 *et seq.*

Author

The principal author of these emergency final supplementary rules is Scott Adams, Outdoor Recreation Planner, of the King Range Project Office within the Arcata Field Office, Bureau of Land Management, Department of the Interior.

For the reasons stated in the Preamble, and under the authority of 43 CFR part 8360, section 8365.1–6, the Arcata Field Office Manager establishes emergency final supplementary rules to read as follows:

Dated: June 14, 2002.

J. Anthony Danna,

Deputy State Director, Natural Resources.

Editorial note: This document was received at the Office of the Federal Register, April 25, 2003.

Emergency final supplementary rules for the King Range National Conservation Area, requiring the mandatory use of hard-sided, bear-proof storage canisters by backcountry overnight visitors.

Sec. 1 Rules of Conduct

a.1. All backcountry overnight users camping on BLM-administered public lands within the boundaries of the King Range National Conservation Area must carry and use hard-sided, bear-proof food storage canisters.

2. The canisters must be of sufficient size to permit storage of all food, toiletries, sunscreen, surfboard wax, insect repellant and other scented items for the duration of the trip.

b. Each person must posses a minimum of one canister, and must use the canister to store the types of items listed in paragraph a.2. of this section, plus any food scraps and scented trash items such as empty cans, energy/candy wrappers, surf wax wrappers, etc.

c. Stock users must use either portable bear canisters or bear proof panniers of sufficient size to store materials for all party members.

Sec. 2 Definitions

For the purposes of these supplementary rules—

Backcountry location means any place outside of a developed campground where food and other scented items cannot be stored inside a locked vehicle.

Hard-sided means made of rigid material and of a size and shape that bears cannot grasp by the mouth or paws, or otherwise carry for a significant distance, and having a closing and latching lid that is tested and proven effective against bears.

Sec. 3 Prohibited Acts

a. You must not camp in the backcountry on BLM-administered public lands without using a hard-sided, bear-proof food storage canister or pannier sufficient for the storage of all food, toiletries, food scraps and trash, and all other scented items, for the duration of your backcountry trip.

b. You must not substitute for the use of bear canisters by hanging food, trash, and other scented items from tree limbs, by burying these items, or by using any other technique in place of using the prescribed portable bear-proof storage canisters.

Sec. 4 Exception

These supplementary rules do not apply to overnight use within designated campgrounds or near vehicles where food is stored and locked inside.

Sec. 5 Penalties

Under the Federal Land Policy and Management Act of 1976 (43 U.S.C. 1733(a)), if you knowingly and willfully violate or fail to comply with the emergency final supplementary rules provided in this notice, you may be subject to a fine under 18 U.S.C. 3571 or other penalties in accordance with 43 U.S.C. 1733.

[FR Doc. 03–10720 Filed 5–1–03; 8:45 am]

BILLING CODE 4310–40–P

DEPARTMENT OF THE INTERIOR

Bureau of Land Management

[UT 050–1610–DO–012J]

Call for Coal Resource and Other Resource Information for Public Lands in Garfield, Piute, Sanpete, Sevier and Wayne Counties, Utah

AGENCY: Richfield Field Office, Bureau of Land Management, Richfield, UT

ACTION: Call for coal resource and other resource information.

SUMMARY: A Notice of intent to prepare a Resource Management Plan for public lands and resources in Garfield, Piute, Sanpete, Sevier and Wayne counties, Utah was published in the **Federal Register**, volume 66, no. 212, Thursday,

November 1, 2001. This supplements that notice with a call for coal resource and other resource information, as required in 43 CFR 3420.1.

DATES: The comment period will commence with the publication of this notice in the **Federal Register** and end 30 days after its publication.

ADDRESSES: Non-proprietary written comments should be sent to Coal Comments, Bureau of Land Management, Richfield Field Office, 150 East 900 North, Richfield, UT 84701; Fax 435–896–1550. Comments, including names and street addresses of respondents, will be available for public review at the Richfield Field Office during regular business hours, 8 a.m. to 4:30 p.m., Monday through Friday, except holidays and may be published as part of the Environmental Impact Statement. Proprietary data marked as confidential may be submitted in response to this call, however, all such proprietary data should be submitted only to James Kohler, Chief, Branch of Solid Minerals, Utah State Office, Bureau of Land Management, P.O. Box 45155, Salt Lake City, UT 84145–0155. Data marked as confidential shall be treated in accordance with the laws and regulations governing confidentiality of such information.

FOR FURTHER INFORMATION CONTACT: Michael Jackson, geologist, BLM Richfield Field Office, 150 East 900 North, Richfield, UT 84701, phone: 435–896–1500, email *Michael_Jackson@ut.blm.gov*.

SUPPLEMENTARY INFORMATION: The purpose of this call for coal information is to obtain any available coal resource data and any other resource information pertinent to applying the coal unsuitability criteria, and to identify any areas of interest for possible Federal coal leasing. The Resource Management Plan will identify areas acceptable for further consideration for leasing and estimate the amount of recoverable coal. Only those areas that have development potential may be identified as acceptable for further consideration for leasing. Coal companies, State and local governments and the general public are encouraged to submit information on coal geology, economic data and other development potential considerations. Where such information is determined to indicate developmental potential for an area, the area may be included in the land use planning evaluation for coal leasing. The BLM will use the unsuitability criteria and procedures outlined in 43 CFR part 3461 to assess where there areas unsuitable for all or certain stipulated methods of mining. Additionally, multiple use decisions that are not included in the unsuitability criteria may eliminate certain coal deposits from further consideration for leasing to protect other resource values and land uses that are locally, regionally or nationally important or unique. In making these multiple use decisions BLM will place particular emphasis on protecting the following: Air and water quality, wetlands, riparian areas and sole-source aquifers; the Federal lands, which leased, would adversely impact units of the National Park System, National Wildlife Refuge System, the National System of Trails, and the National Wild and Scenic Rivers System. Before adopting the resource management plan that makes an assessment of lands acceptable for further consideration for leasing, the BLM will consult with the state Governor and the state agency charged with the responsibility for maintaining the state's coal unsuitability program. Where tribal governments administer areas within or near the boundaries of the land use plan, the bureau shall consult with the appropriate tribal government.

Dated: April 1, 2003.

Sally Wisely,

State Director.

[FR Doc. 03–10873 Filed 5–1–03; 8:45 am]

BILLING CODE 4310–DQ–P

DEPARTMENT OF THE INTERIOR

Bureau of Land Management

[CA–930–1920–ET–4064; CACA 43173]

Notice of Proposed Withdrawal and Opportunity for Public Meeting; California

AGENCY: Bureau of Land Management, Interior.

ACTION: Notice.

SUMMARY: The Forest Service proposes to withdraw approximately 2,030 acres in the Inyo National Forest to facilitate the establishment of the McAfee Research Natural Area. This notice closes the land for up to 2 years from mining. The land will remain open to mineral leasing and the Materials Act of 1947.

DATES: Comments and requests for a public meeting must be received by July 31, 2003.

ADDRESSES: Forest Supervisor, Inyo National Forest, 879 North Main Street, Bishop, California 93514.

FOR FURTHER INFORMATION CONTACT: Vernon McLean, Inyo National Forest, 760–873–2472.

SUPPLEMENTARY INFORMATION: On April 13, 2001, the Inyo National Forest, Forest Service, filed an application to withdraw the following described National Forest System land from location and entry under the United States mining laws (30 U.S.C. ch. 2), subject to valid existing rights:

Mount Diablo Meridian

All that portion of land within the Inyo National Forest, County of Inyo, State of California, described as follows: All those portions of sections 4, 8, 9, 10, 15, 16, 17, 20, 21 and 22, T. 4 S., R. 34 E., Mount Diablo Meridian, more particularly described as follows:

Beginning at a 3¼ inch capped aluminum monument, stamped ''McAfee A'' which lies on a peak, 13,189 feet in elevation, (Point A, Exhibit A), which is in the NW¼, section 9;

Thence, southwesterly (mostly southerly), approximately 0.88 miles to a 3¼ inch capped aluminum monument, stamped ''McAfee B'' which lies on a peak, 12,970 feet in elevation, (Point B, Exhibit A), which is in the SE¼, section 8;

Thence, southerly, approximately 1.43 miles to a 3¼ inch capped aluminum monument, stamped ''McAfee C'' which lies at the northeast corner of the Barcroft Observatory Site, (Point C, Exhibit A), which is in the NE¼, section 20;

Thence, southwesterly (mostly westerly), approximately 0.79 miles to a 3¼ inch capped aluminum monument, stamped ''McAfee D'' which lies on a peak, 12,205 feet in elevation, (Point D, Exhibit A), which is in the S½, section 21;

Thence, easterly approximately 1.29 miles to a 3¼ inch capped aluminum monument, stamped ''McAfee E'' which lies on a peak, 11,783 feet in elevation, (Point E, Exhibit A), which is in the E½, section 22;

Thence, northerly approximately 0.80 miles to a 3¼ inch capped aluminum monument, stamped ''McAfee F'' which lies on a peak, 11,745 feet in elevation, (Point F, Exhibit A), which is in the SE¼, section 15;

Thence, northwesterly (mostly northerly) approximately 1.06 miles to a 3¼ inch capped aluminum monument, stamped ''McAfee G'' which lies on knoll at the easterly end of a plateau, at approximately 11,880 feet in elevation (Point G, Exhibit A), which is in the south ½, section 10;

Thence, westerly approximately 1.32 miles along the edge of the plateau to a 3¼ inch capped aluminum monument, stamped ''McAfee'', which is in the S½, section 9;

Thence, northerly approximately 0.66 miles along the edge of the plateau, ascending to a 3¼ inch capped aluminum monument, stamped ''McAfee H'' which lies on point, approximately 13,091 feet in elevation (Point H, Exhibit A), which is in the SW¼, section 4;

Thence, southwesterly approximately 0.3 miles to the point of beginning.

The area described contains approximately 2,030 acres in Inyo County.

The land proposed for withdrawal is to be designated the McAfee Research

Natural Area (MRNA). Establishment of the MRNA is valuable for maintaining the interrelationships of terrestrial and aquatic systems, and facilitates research, monitoring and protection. The withdrawal is needed to prevent potential surface disturbing activities from the location of mining claims within the MRNA. The requested duration of the withdrawal is 20 years.

For a period of 90 days from the date of publication of this notice, all persons who wish to submit comments, suggestions, or objections in connection with the proposed withdrawal may present their views in writing to the Forest Supervisor, Inyo National Forest. Since the Forest Service is requesting this withdrawal, it is responsible for preparing any studies, analyses, and reports that are required by applicable statutes for the processing of this application. Those studies, analyses, and reports will be used by the Secretary of the Interior to make a decision as to whether this withdrawal should be authorized.

Notice is hereby given that an opportunity for a public meeting is afforded in connection with the proposed withdrawal. All interested persons who desire a public meeting for the purpose of being heard on the proposed withdrawal must submit a written request to the Forest Supervisor within 90 days from the date of publication of this notice. Upon determination by the authorized officer that a public meeting will be held, a notice of the time and place will be published in the **Federal Register** at least 30 days before the scheduled date of the meeting.

The application will be processed in accordance with the regulations set forth in 43 CFR 2300.

For a period of 2 years from the date of publication of this notice in the **Federal Register**, the land will be segregated as specified above unless the application is denied or canceled or the withdrawal is approved prior to that date. The temporary uses which may be permitted during this segregative period are those which are determined to be compatible with the use of the land by Forest Service.

Duane Marti,

Acting Chief, Branch of Lands (CA–931).

[FR Doc. 03–10811 Filed 5–1–03; 8:45 am]

BILLING CODE 4310–40–P

DEPARTMENT OF THE INTERIOR

National Park Service

60-Day Notice of Intention To Request Clearance of Information Collection—Opportunity for Public Comment

AGENCY: Department of the Interior, National Park Service, National Underground Railroad Network to Freedom Program.

ACTION: Notice and request for comments.

SUMMARY: Under the provisions of the Paperwork Reduction Act of 1995 (Pub. L. 104–13, 44 U.S.C. 3507) and 5 CFR part 1320, Reporting and Recordkeeping Requirements, the National Park Service invites public comments on an existing information collection. Comments are invited on: (1) The need for the information including whether the information has practical utility; (2) the accuracy of this reporting burden estimate; (3) ways to enhance the quality, utility, and clarity of the information to be collected on respondents, including the use of automated collection techniques or other forms of information technology. This program will measure performance in meeting goals as required by the 1995 Government Performance and Results Act.

Public Law 105–203 authorizes the National Park Service (NPS) to develop and administer the National Underground Railroad Network to Freedom (Network), a nationwide collection of governmental and nongovernmental sites, facilities, and programs associated with the historic Underground Railroad movement. The NPS has developed the application process through which associated elements can be included in the Network. The information collected will: (a) Verify associations to the Underground Railroad, (b) Measure minimum levels of standards for inclusion in the Network, and (c) Identify general needs for technical assistance.

DATES: Public comments on the proposed ICR will be accepted on or before July 1, 2003, to be assured of consideration.

ADDRESSES: Send comments to Diane Miller, National Coordinator, National Underground Railroad Network to Freedom Program, National Park Service, Midwest Regional Office, 1709 Jackson Street, Omaha, Nebraska, 68102.

All responses to this notice will be summarized and included in the requests for Office of Management and Budget (OMB) approval. All comments will become a matter of public record. Copies of the proposed ICR can be obtained from Diane Miller, National Coordinator, National Underground Railroad Network to Freedom Program, National Park Service, Midwest Regional Office, 1709 Jackson Street, Omaha, Nebraska 68102.

FOR FURTHER INFORMATION CONTACT: Diane Miller, 402–221–3749 or James Hill 402–221–3413.

SUPPLEMENTARY INFORMATION:

Title: NPS National Underground Railroad Network to Freedom Application.

Bureau Form Number: n/a.

OMB Number: 1024–0232.

Expiration Date: 11/30/2003.

Type of request: Extension of a currently approved information collection.

Description of need: The NPS has identified guidelines and criteria for associated elements to qualify for the Network. The application form document sites, programs, and facilities and demonstrates that they meet the criteria established for inclusion. The documentation will be incorporated into a database that will be available to the general public for information purposes.

Automated data collection: Respondents must verify associations and characteristics through descriptive texts that are the results of historical research. Evaluations are based on subjective analysis of the information provided, which often includes copies of rare documents and photographs. Much of the information is submitted in electronic format, but at the present time, there is not automated way to gather all of the required information.

Description of respondents: The affected public are state, tribal, and local governments, federal agencies, businesses, non-profit organizations, and individuals throughout the United States. Nominations to the Network are voluntary.

Estimated average number of respondents: 100.

Estimated average number of responses: 100.

Estimated average burden hours per response: 10.

Estimated frequency of response: once per respondent.

Estimated annual reporting burden: 1000 hours.

Dated: April 15, 2003.

Leonard E. Stowe,

Acting NPS Information Collection Clearance Officer, Washington Administrative Program Center.

[FR Doc. 03–10903 Filed 5–1–03; 8:45 am]

BILLING CODE 4310–70–M

DEPARTMENT OF THE INTERIOR

National Park Service

Notice of Availability of a Final Environmental Impact Statement (EIS) for the General Management Plan Amendment (GMPA) for Biscayne National Park, Homestead, FL

SUMMARY: Pursuant to section 102 (2) (c) of the National Environmental Policy Act of 1969, the National Park Service announces the availability of a final Environmental Impact Statement and General Management Plan Amendment (FEIS/GMPA) for Biscayne National Park, Homestead, Florida.

DATES: The Draft EIS/GMP was on public review from December 6, 2002, through February 13, 2003. Responses to public comment are addressed in the FEIS/GMPA. A 30-day no-action period will follow the Environmental Protection Agency's Notice of Availability of the FEIS/GMPA in the **Federal Register**. After the 30-day period, the NPS Southeast Regional Director will sign a Record of Decision that will document NPS approval of the final EIS/GMPA and identify the selected alternative for implementation.

ADDRESSES: Copies of the FEIS/GMPA are available from the Superintendent, Biscayne National Park, P.O. Box 1369, Homestead, Florida 33090–1369. Public reading copies of the FEIS/GMPA will also be available for review at the following locations:

- Office of the Superintendent, Biscayne National Park, 9700 S.W. 328th Street, Homestead, Florida 33033–5634. Telephone: 305–230–1144, Ext. 3002.
- Division of Planning and Compliance, Southeast Regional Office, National Park Service, Attention: David Libman, 100 Alabama Street, 1924 Building, Atlanta, Georgia 30303, Telephone: 404–562–3124, ext. 685.

SUPPLEMENTARY INFORMATION: Consistent with the park's purpose, significance, and mission goals, the FEIS/GMPA analyzes 4 alternatives for guiding management of the Stiltsville area of the park over the next 15 to 20 years. The environmental consequences anticipated from implementation of the various alternatives are addressed in the document. Impact topics include cultural resources, natural resources, visitor use and experience and socioeconomic environment. The following management alternatives were evaluated in the EIS/GMPA:

Under Alternative A, the preferred alternative, a non-profit organization would be created along with an appropriate agreement with the National Park Service and other groups for the management and use of the Stiltsville structures. The Stiltsville organization would rehabilitate the buildings to support education and interpretation opportunities. Stiltsville also may provide a visitor and interpretive center, research facilities, an artist-in-residence dwelling, meeting space, and a satellite park office that would provide for National Park Service presence in the northern portion of the park.

Alternative B, would result in the National Park Service being responsible for the renovation, management, and operation of the Stiltsville structures. The designated uses of the structures would be similar to Alternative A.

Under Alternative C, the structures would be leased for private use based on current authorities. Potential lessees would compete for the right to lease the structures. The size or footprint of the structure would not be expanded. The purposes for which the structures could be leased is similar to Alternative A as well as for private uses similar to those under the former non-renewable leases. Preference would be given to individuals or groups that would provide for some level of public access.

Alternative D is the no-action alternative, which would implement the provision of the non-renewable leases that calls for the removal of the structures from the Stiltsville area.

FOR FURTHER INFORMATION CONTACT: Superintendent, Biscayne National Park, P.O. Box 1369, Homestead, FL 33090–1369, Telephone: 305–230–1144, Ext. 2002.

The responsible official for this Environmental Impact Statement is William Schenk, Regional Director, Southeast Region, National Park Service, 100 Alabama Street SW., 1924 Building, Atlanta, Georgia 30303.

Dated: February 21, 2003.

William W. Schenk,

Regional Director, Southeast Region.

[FR Doc. 03–10908 Filed 5–1–03; 8:45 am]

BILLING CODE 4310–70–P

DEPARTMENT OF THE INTERIOR

National Park Service

Denali National Park and Preserve Draft Backcountry Management Plan, General Management Plan Amendment, and Environmental Impact Statement

AGENCY: National Park Service, Interior.

ACTION: Public comment period extension for Denali National Park and Preserve Draft Backcountry Management Plan, General Management Plan Amendment, and Environmental Impact Statement.

SUMMARY: The National Park Service announces that the public comment period for the Denali National Park and Preserve Draft Backcountry Management Plan, General Management Plan Amendment, and Environmental Impact Statement has been extended to May 30, 2003.

DATES: Comments on the general management plan amendment and environmental impact statement will be accepted through May 30, 2003.

ADDRESSES: Comments on the proposed general management plan amendment and environmental impact statement should be submitted to the: Superintendent, Denali National Park and Preserve, P.O. Box 9, Denali Park, Alaska, 99755.

FOR FURTHER INFORMATION CONTACT: Copies of the draft plan are available by writing the Superintendent, Denali National Park and Preserve, P.O. Box 9, Denali Park, Alaska, 99755, or by calling (907) 683–2294. The plan is published in print, CD–ROM, and on the park's web site at: *http://www.nps.gov/dena/home/planning/plans/bcplan/bcbrief.html.*

A printed Executive Summary is also available.

Victor Knox,

Acting Regional Director, Alaska.

[FR Doc. 03–10905 Filed 5–1–03; 8:45 am]

BILLING CODE 4310–70–P

DEPARTMENT OF THE INTERIOR

National Park Service

Notice of Intent To Prepare a Draft Environmental Impact Statement on the General Management Plan Amendment and Development Concept Plan for Chalmette Battlefield and National Cemetery, an Administrative Unit of Jean Lafitte National Historical Park and Preserve, Louisiana

SUMMARY: Pursuant to section 102(2)(c) of the National Environmental Policy Act of 1969 (NEPA), the National Park Service (Service) will prepare an Environmental Impact Statement (EIS) to accompany its General Management Plan Amendment and Development Concept Plan (GMPA/DCP) for Chalmette Battlefield and National Cemetery. The Service will conduct public scoping meetings in the local area to receive input from interested parties on issues, concerns, and suggestions pertinent to managing cultural and natural resource conditions and visitor experiences at the site.

Duration of the comment period for public scoping will be announced at the meetings and will be published on the Jean Lafitte National Historical Park and Preserve website at *http://www.nps.gov/jela.*

DATES: Locations, dates, and times of public scoping meetings will be published in local newspapers and may also be obtained by calling Jean Lafitte National Historical Park and Preserve. This information will also be published on the Jean Lafitte National Historical Park and Preserve website.

ADDRESS: Scoping suggestions should be submitted to the following address to ensure adequate consideration by the Service: Superintendent, Jean Lafitte National Historical Park and Preserve, 419 Rue Decatur, New Orleans, Louisiana 70130–1142, Telephone: 504–589–3882.

FOR FURTHER INFORMATION CONTACT: Superintendent, Jean Lafitte National Historical Park and Preserve, 419 Rue Decatur, New Orleans, Louisiana 70130–1142, Telephone: 504–589–3882.

SUPPLEMENTARY INFORMATION: The National Park Service has announced that an EIS will be prepared for this GMPA/DCP. To comply with Service and NEPA policy, a formal scoping period is announced.

Comments are invited on any issue believed to be relevant to the management of Chalmette Battlefield and National Cemetery and should be submitted to the Superintendent whose address is given above. Public scoping meetings will be held in the local area and the dates and times may be obtained from local newspapers, the Jean Lafitte National Historical Park and Preserve website, or by calling Jean Lafitte National Historical Park and Preserve. We urge that comments and suggestions be made in writing.

Our practice is to make the public comments we receive in response to planning documents, including names and home addresses of respondents, available for public review during regular business hours. If you wish for us to withhold your name and/or address, you must state this prominently at the beginning of your comment. Anonymous comments will be included in the public record; however, the Service is not legally required to consider or respond to anonymous comments. We will make all submissions from organizations or businesses, and from individuals identifying themselves as representatives or officials of organizations or businesses, available for public inspection in their entirety.

Issues currently being considered include determining the most appropriate use of existing structures, enhancement of vehicle and pedestrian circulation, identification of future infrastructure needs, and how to best fulfill the park's interpretive mission. Central to these issues is definition of the national battlefield and cemetery's mission, purpose, and significance. The plan will identify desired future conditions for cultural and natural resources and visitor experiences for various management units within Chalmette Battlefield and National Cemetery. A schematic site design will be developed to further define potential physical changes to the historic landscape. A draft GMPA/DCP/EIS will be prepared and presented to the public for review and comment, followed by preparation and availability of the final GMPA/DCP/EIS.

The responsible official for this environmental impact statement is William W. Schenk, Regional Director, National Park Service, Southeast Region, 100 Alabama Street SW., Atlanta, Georgia 30303.

Dated: April 17, 2003.

W. Thomas Brown,

Acting Regional Director, Southeast Region.

[FR Doc. 03–10907 Filed 5–1–03; 8:45 am]

BILLING CODE 4310–70–P

DEPARTMENT OF THE INTERIOR

National Park Service

Acadia National Park, Bar Harbor, ME; Acadia National Park Advisory Commission; Notice of Meeting

Notice is hereby given in accordance with the Federal Advisory Committee Act (Public Law 92–463, 86 Stat. 770, 5 U.S.C. App. 1, Sec. 10), that the Acadia National Park Advisory Commission will hold a meeting on Monday, June 2, 2003.

The Commission was established pursuant to Pub. L. 99–420, Section 103. The purpose of the commission is to consult with the Secretary of the Interior, or his designee, on matters relating to the management and development of the park, including but not limited to the acquisition of lands and interests in lands (including conservation easements on islands) and termination of rights of use and occupancy.

The meeting will convene at park Headquarters, McFarland Hill, Bar Harbor, Maine, at 1 p.m. to consider the following agenda:

1. Review and approval of minutes from the meeting held February 3, 2003
2. Committee reports:
—Land Conservation
—Park Use
—Science
3. Old business
4. Superintendent's report
5. Public comments
6. Proposed agenda for next Commission meeting, June 2, 2003

The meeting is open to the public. Interested persons may make oral/written presentations to the Commission or file written statements. Such requests should be made to the Superintendent at least seven days prior to the meeting.

Further information concerning this meeting may be obtained from the Superintendent, Acadia National Park, P.O. Box 177, Bar Harbor, Maine 04609, tel: (207) 288–3338.

Dated: April 4, 2003.

Len Bobinchock,

Acting Superintendent, Acadia National Park.

[FR Doc. 03–10906 Filed 5–1–03; 8:45 am]

BILLING CODE 4310–70–P

DEPARTMENT OF THE INTERIOR

National Park Service

Gettysburg National Military Park Advisory Commission

AGENCY: National Park Service, Interior.

ACTION: Notice of June 19, 2003 meeting.

SUMMARY: This notice sets forth the date of the June 19, 2003 meeting of the Gettysburg National Military Park Advisory Commission.

DATES: The public meeting will be held on June 19, 2003 from 7 p.m. to 9 p.m.

Location: The meeting will be held at the Cyclorama Auditorium, 125 Taneytown Road, Gettysburg, Pennsylvania 17325.

Agenda: The June 19, 2003 meeting will consist of the Sub-Committee Reports from the Historical, Executive, and Interpretive Committees; Federal Consistency Reports Within the Gettysburg Battlefield Historic District; Operational Updates on Park Activities which consists of an update on Gettysburg National Battlefield Museum Foundation and National Park Service activities related to the new Visitor Center/Museum Complex, update on the 5-year plan for the Historic Landscape Rehabilitation; update on the Pennsylvania Monument; Construction Updates such as the fire suppression project for 50 historic structures, the Gettysburg Borough Interpretive Plan which will consist of updates on the Wills House and the Train Station; Transportation which consists of the

National Park Service and the Gettysburg Borough working on the shuttle system; Update on land acquisition within the park boundary or in the historic district; and the Citizens Open Forum where the public can make comments and ask questions on any park activity.

FOR FURTHER INFORMATION CONTACT: John A. Latschar, Superintendent, Gettysburg National Military Park, 97 Taneytown Road, Gettysburg, Pennsylvania 17325.

SUPPLEMENTARY INFORMATION: The meeting will be open to the public. Any member of the public may file with the Commission a written statement concerning agenda items. The statement should be addressed to the Gettysburg National Military Park Advisory Commission, 97 Taneytown Road, Gettysburg, Pennsylvania 17325.

Dated: April 14, 2003.

John A. Latschar,

Superintendent, Gettysburg NMP/Eisenhower NHS.

[FR Doc. 03–10904 Filed 5–1–03; 8:45 am]

BILLING CODE 4310–70–M

DEPARTMENT OF THE INTERIOR

National Park Service

National Capital Memorial Commission; Notice of Public Meeting

AGENCY: Department of the Interior, National Park Service, National Capital Memorial Commission.

ACTION: Notice of meeting.

SUMMARY: Notice is hereby given in accordance with the Federal Advisory Committee Act that a meeting of the National Capital Memorial Commission (the Commission) will be held at 1 pm., on Thursday, May 22, at the National Building Museum, Room 312, 5th and F Streets, NW., Washington, DC.

The purpose of the meeting will be to discuss currently authorized and proposed memorials in the District of Columbia and its environs.

In addition to discussing general matters and conducting routine business, the Commission will review the following: Legislative proposals introduced and reintroduced in the 108th Congress to establish memorials in the District of Columbia and its environs.

Action Items

(1) H.R. 591, a bill to authorize the Ukrainian Congress Committee of America to establish a memorial on Federal land in the District of Columbia to honor the victims of the Ukrainian famine-genocide of 1932–1933;

(2) S. 296, a bill to require the Secretary of Defense to report to Congress regarding the requirements applicable to the inscription of veterans' names on the memorial wall of the Vietnam Veterans Memorial;

(3) H.R. 1442, a bill to authorize the design and construction of a visitor center for the Vietnam Veterans Memorial; and

(4) S. 470 and H.R. 1209, bills to extend the authority for the construction of a memorial to Martin Luther King, Jr.

Other Business

(1) General matters and routine business.

The meeting will be open to the public. Any person may file with the Commission a written statement concerning the matters to be discussed. Persons who wish to file a written statement or testify at the meeting or who want further information concerning the meeting may contact Ms. Nancy Young, Secretary to the Commission, at (202) 619–7097.

DATES: Thursday, May 22, 2003, at 1 p.m.

ADDRESSES: Room 312, National Building Museum, 5th and F Streets, NW., Washington, DC 20001.

FOR FURTHER INFORMATION CONTACT: Ms. Nancy Young, Secretary to the Commission, 202–619–7097.

SUPPLEMENTARY INFORMATION: The Commission was established by Public Law 99–652, the Commemorative Works Act (40 U.S.C. 1001 *et seq.*), to advise the Secretary of the Interior (the Secretary) and the Administrator, General Services Administration, (the Administrator) on policy and procedures for establishment of (and proposals to establish) commemorative works in the District of Columbia and its environs, as well as such other matters as it may deem appropriate concerning commemorative works.

The Commission examines each memorial proposal for conformance to the Commemorative Works Act, and makes recommendations to the Secretary and the Administrator and to Members and Committees of Congress. The Commission also serves as a source of information for persons seeking to establish memorials in Washington, DC, and its environs.

The members of the Commission are as follows:

Director, National Park Service.
Chairman, National Capital Planning Commission.
Architect of the Capitol.
Chairman, American Battle Monuments Commission.
Chairman, Commission of Fine Arts.
Mayor of the District of Columbia.
Administrator, General Services Administration.
Secretary of Defense.

Dated: April 8, 2003.

Gentry Davis,

Acting Regional Director, National Capital Region.

[FR Doc. 03–10902 Filed 5–1–03; 8:45 am]

BILLING CODE 4310–70–M

DEPARTMENT OF THE INTERIOR

National Park Service

National Preservation Technology and Training Board: Meeting

AGENCY: National Park Service, Interior.

ACTION: Notice.

Notice is hereby given in accordance with the Federal Advisory Committee Act, 5 U.S.C. Appendix (1988), that the National Preservation Technology and Training Board (the Board) will meet May 28, 2003, in Atlanta, GA.

The Board was established by Congress to provide leadership, policy advice, and professional oversight to the National Center for Preservation Technology and Training (NCPTT), as required under the National Historic Preservation Act of 1966, as amended (16 U.S.C. 470).

The Board will meet in the Sam Nunn Atlanta Federal Center Towers Building, Conference Room D, 61 Forsyth Street SW, Atlanta, GA. On Wednesday, May 28, the meeting will start at 9:00 a.m. and end no later than 5:00 p.m. The agenda will include NCPTT operations, budget, and program development; the NCPTT business and strategic plans; Preservation Technology and Training grants; and the Heritage Education program.

The meeting is open to the public. Facilities and space for accommodating members of the public are limited, however, and persons will be accommodated on a first-come, first-served basis. Any member of the public may file a written statement concerning the matters to be discussed.

Persons wishing more information concerning this meeting, or who wish to submit written statements, may contact Mr. de Teel Patterson Tiller, Acting Associate Director, Cultural Resources, 1849 C Street NW-3128 MIB, Washington, DC 20240, telephone (202) 208-7625. Increased security in the Washington, DC, area may cause delays in the delivery of U.S. Mail to government offices. In addition to mail or commercial delivery, please fax a

copy of the written submission to Mr. Tiller at (202) 273-3237.

Minutes of the meeting will be available for public inspection no later than 90 days after the meeting at the office of the Acting Associate Director, Cultural Resources, 1849 C Street NW, Room 3128, Washington, DC.

Dated: April 8, 2003.

de Teel Patterson Tiller

Acting Associate Director, Cultural Resources.

[FR Doc. 03–10920 Filed 5–1–03; 8:45 am]

BILLING CODE 4310–70–S

DEPARTMENT OF THE INTERIOR

National Park Service

National Register of Historic Places; Notification of Pending Nominations

Nominations for the following properties being considered for listing in the National Register were received by the National Park Service before April 12, 2002. Pursuant to § 60.13 of 36 CFR part 60 written comments concerning the significance of these properties under the National Register criteria for evaluation may be forwarded by United States Postal Service, to the National Register of Historic Places, National Park Service, 1849 C St. NW., 2280, Washington, DC 20240; by all other carriers, National Register of Historic Places, National Park Service, 1201 Eye St. NW., 8th floor, Washington DC 20005; or by fax, 202–343–1836. Written or faxed comments should be submitted by May 19, 2003.

Beth L. Savage,

Acting Keeper of the National Register of Historic Places.

Alabama

Lee County

President's Mansion, Old, 277 W. Thach Ave., Auburn University, Auburn, 03000423

Arkansas

Dallas County

Prosperity Baptist Church, AR 8 W, Ramsey, 03000421

Pulaski County

Center Theater, 407 S. Main St., Little Rock, 03000422

California

Alameda County

Claremont Hotel, 41 Tunnel Rd., Oakland, 03000427

Los Angeles County

Hackett, Edward Alexander Kelley, House, 1317 S. Westlake Ave., Los Angeles, 03000428

Madera County

Chateau Colline, 10355 Wilshire Blvd., Los Angeles, 03000426

Orange County

Fullerton City Hall, 237 W. Commonwealth Ave., Fullerton, 03000424

Sacramento County

Westminster Presbyterian Church, 1300 N St., Sacramento, 03000425

Georgia

Morgan County

Rutledge Historic District, Centered along Main St., the Georgia Railroad (CSX), E. Dixis Hwy and Fairplay Rd., Rutledge, 03000429

Tennessee

Madison County

Hollywood Cemetery, 406 Hollywood Dr., Jackson, 03000430

Sullivan County

Bristol Commercial Historic District, Roughly along State, Piedmont, Moore, Shelby, Bank, Progress, 5th, 6th, 7th and 8th Sts., Bristol, 03000440 Texas

Tarrant County

Bratton, Andrew ''Cap'' and Emma Doughty, House, (Mansfield, Texas MPS) 310 E. Broad St., Mansfield, 03000432

Tarrant County

Buchanan-Hayter-Witherspoon House, (Mansfield, Texas MPS) 306 E. Broad St., Mansfield, 03000433

Chorn, Lester H. and Mabel Bryant, House, (Mansfield, Texas MPS) 303 E. Broad St., Mansfield, 03000434

Man, Ralph Sandiford and Julia Boisseau, House, (Mansfield, Texas MPS) 604 W. Broad St., Mansfield, 03000435

Wallace—Hall House, (Mansfield, Texas MPS) 210 S. Main St., Mansfield, 03000436

Webb County

Barrio Azteca Historic District, Roughly bounded by I–35, Matamoros St., Arroyo Zacate, and the Rio Grande, Laredo, 03000431

Virginia

Albemarle County

Mirador (Boundary Increase), 7459 Mirador Farm Rd., Greenwood, 03000444

Arlington County

Cherrydale Historic District, Roughly bounded by Lorcom Ln., N. Utah and N. Taylor Sts., and I–66, Arlington, 03000461

Crossman, George, House, 2501 N. Underwood St., Arlington, 03000455

Lyon Park Historic District, Roughly bounded by 10th St. N, Arlington Blvd., and N. Irving St., Arlington, 03000437

Maywood Historic District, Roughly bounded by Lorcom Ln., Spout Run Parkway, I–66, Lee Highway, N. Oakland St., N. Nelson St., and N. Lincoln St., Arlington, 03000460

Saegmuller House, 5101 Little Falls Rd., Arlington, 03000453

Walter Reed Gardens Historic District, (Garden Apartments, Apartment Houses and Apartment Complexes in Arlington County, Virginia MPS) 2900–2906 13th St. S, 2900–2914 13th Rd S, 1301–1319 S. Walter Reed Dr., Arlington, 03000451

Bristol Independent City

Bristol Commercial Historic District, Roughly along State, Piedmont, Moore, Shelby, Bank, Progress, 5th, 6th, 7th, and 8th Sts., Bristol, 03000441

Caroline County

Bowling Green Historic District, Roughly along and bounded by Bowling Green Bypass, Broadus Ave., Lakewood Rd., N. Main St., and Paige Rd., Bowling Green, 03000439

Fairfax County

Gunnell, William, House, 600 Insbruck Ave., Great Falls, 03000447

Hanover County

Selwyn, 6279 Powhite Farm Dr., Mechanicsville, 03000445

Henrico County

Beth Elon, 4600 Nine Mile Rd., Richmond, 03000446

Loudoun County

Ketoctin Baptist Church, Approx. 2 mi. N of VA 7 at the jct of Allder School Rd. and Ketoctin Church Rd., Round Hill, 03000452

Unison Historic District, Area including parts of Unison and Bloomfield Rds., Middleburg, 03000442

Mecklenburg County

Colonial Theatre, 220 S. Mecklenburg Ave., South Hill, 03000448

Norfolk Independent City

Ballentine Place Historic District, Roughly bounded by Cromwell Ave., Cape Henry Ave., McKann Ave., and Lafayetter Blvd., Norfolk (Independent City), 03000459

Chesterfield Heights Historic District, Roughly bounded by the E Branch of Elizabeth R, Ballentine Blvd., Sedgewick St. and I–264, Norfolk (Independent City), 03000443

Page County

Luray Downtown Historic District, Roughly E. Main St., W. Main St., S. Court St., and s. Broad St., Luray, 03000438

Roanoke County

Pleasant Grove, 4377 W. Main St., Salem, 03000449

Roanoke Independent City

Burrell Memorial Hospital, 611 McDowell St., Roanoke (Independent City), 03000450

Virginian Railway Passenger Station, 1402 Jefferson St. SE, Roanoke (Independent City), 03000456

Stafford County

Government Island—Wiggington's Island—Brent Island—Aquia Quarry—Public Quarry—Aquia Sandstone Quarry, Address Restricted, Stafford, 03000457

Wythe County

Sanders Farm, 3908 Fort Chiswell Rd., Max Meadows, 03000454

West Virginia

Doddridge County

West Union Downtown Historic District, Roughly bounded by B&O RR, Court St, and Cottage St., West Union, 03000458

A request for REMOVAL has been made for the following resource:

Oregon

Mutnomah County

Hochapfel, Edward C., House 1520 SW 11th Ave., Portland, 83002171

A request for a move has been made for the following resource:

Oregon

Washington County

Tualatin Academy, Pacific University campus, Forest Grove, 74001722

[FR Doc. 03–10909 Filed 5–1–03; 8:45 am]

BILLING CODE 4310–70–P

DEPARTMENT OF THE INTERIOR

National Park Service

National Register of Historic Places; Notification of Pending Nominations

Nominations for the following properties being considered for listing in the National Register were received by the National Park Service before April 5, 2003. Pursuant to § 60.13 of 36 CFR part 60 written comments concerning the significance of these properties under the National Register criteria for evaluation may be forwarded by United States Postal Service, to the National Register of Historic Places, National Park Service, 1849 C St. NW., 2280, Washington, DC 20240; by all other carriers, National Register of Historic Places, National Park Service, 1201 Eye St. NW., 8th floor, Washington DC 20005; or by fax, 202–343–1836. Written or faxed comments should be submitted by May 19, 2003.

Carol D. Shull,

Keeper of the National Register of Historic Places.

Arkansas

Cleveland County

Hall Morgan Post 83, American Legion Hut, 208 Sycamore St., 208 Sycamore St., 03000399

Jefferson County

St. Louis Southwester Railway Steam Locomotive #819, 1720 Port Rd., Pine Bluff, 03000401

Lawrence County

Old U.S. 67, Alicia to Hoxie, (Arkansas Highway History and Architecture MPS) First St., Lawrence Cty. Rds. 747 and 549, and immediately E of current US 67, Alicia, 03000397

Pike County

Murfreesboro Cities Service Station, (Arkansas Highway History and Architecture MPS) NE side of the Town Square, Murfreesboro, 03000400

Stone County

Newton Sutterfield Farmstead, (Stone County MRA) 1797 Horton Hill Rd., Alco, 03000398

Colorado

Denver County

Temple Emanuel, 51 Grape St., Denver, 03000403

Mesa County

Crissey, Herbert and Edith, House, 218 W. 1st St., Palisade, 03000402

Connecticut

New Haven County

New Haven County Courthouse, 121 Elm St., New Haven, 03000404

Georgia

Haralson County

North Tallapoosa Residential Historic District, Roughly Centered on int. Bowden St. and Manning St., Tallapoosa, 03000405

Nevada

Churchill County

Holy Trinity Episcopal Church, 507 Churchill St., Fallon, 03000413

Clark County

John S. Park Historic Park, Roughly bounded by Charleston Blvd., Las Vegas Blvd., Franklin Ave., and S. Ninth St., Las Vegas, 03000412

Douglas County

Gardnerville Branch Jail, 1440 Courthouse St., Gardnerville, 03000415

Lyon County

Fernley Community Church, 80 S. Center St., Fernley, 03000414

Washoe County

Field Matron's Cottage, 1995 E. Second St., Reno, 03000416

Patrick Ranch House, 1225 Gordon Ave., Reno, 03000417

New Mexico

Eddy County

Armandine, 1301 N. Canal St., Carlsbad, 03000418

New York

Erie County

Concrete—Central Elevator, (Buffalo Grain and Materials Elevator MPS) 175 Buffalo River, Buffalo, 03000410

Wollenberg Grain and Seed Elevator, (Buffalo Grain and Materials Elevator MPS) 131 Goodyear Ave., Buffalo, 03000409

Nassau County

Sea cliff Firehouse, Roslyn Ave., Sea Cliff, 03000408

New York County

West 147th—149th Sts. Historic District, Roughly bounded by Eighth Ave., W. 149th St., Seventh Ave., and W. 147th Ave., New York, 03000407

Steuben County

Corning Armory, (Army National Guard Armories in New York State MPS) 127 Centerway, Corning, 03000411

Suffolk County

Wood, Joseph, House, 284 Greene Ave., Sayville, 03000406

North Carolina

Pitt County

Greenville Commercial Historic District, Roughly bounded by West Third, South Evans and East and West Fifth Sts., Greenville, 03000419

Oregon

Clackamas County

Rosenfeld, Walter, Estate, 15361 S. Clackamas River Dr., Oregon City, 03000420

A request for removal has been made for the following resources:

Arkansas

Cleburne County

Quitman High School Building, (Public Schools in the Ozarks MPS) AR 25 Quitman, 92001126

Johnson County

Science Hall, University of the Ozarks, University of the Ozarks campus, W of AR 103, Clarksville, 92001830

Pulaski County

Ish House, 1600 Scott St., Little Rock, 78000621

Pettefer, Harry, House, 105 E. 24th St., Little Rock, 78000624

White County

Honey Hill Christian Union Church, (White County MPS) S of AR 36 SW of Searcy, Searcy, 91001352

Iowa

Scott County

Ferner, Matthais, Building, (Davenport MRA) 212 Main St., Davenport, 83002426

Grant, W.T., Company, (Davenport MRA) 226 W. 2nd St., Davenport, 84001420

Ochs Building, (Davenport MRA) 214 Main St., Davenport, 83002478

[FR Doc. 03–10910 Filed 5–1–03; 8:45 am]

BILLING CODE 4310–70–P

DEPARTMENT OF THE INTERIOR

National Park Service

Notice of Inventory Completion: Alaska State Museum, Juneau, AK

AGENCY: National Park Service, Interior.

ACTION: Notice.

Notice is here given in accordance with the Native American Graves Protection and Repatriation Act (NAGPRA), 25 U.S.C. 3003, of the completion of an inventory of human remains in the possession of the Alaska State Museum, Juneau, AK. The human remains were removed from Steilacoom Creek, Pierce County, WA, and from an unrecorded site probably in the vicinity of Tacoma, Pierce County, WA.

This notice is published as part of the National Park Service's administrative responsibilities under NAGPRA, 25 U.S.C. 3003 (d)(3). The determinations within this notice are the sole responsibility of the museum, institution, or Federal agency that has control of the Native American human remains. The National Park Service is not responsible for the determinations within this notice.

A detailed assessment of the human remains was made by Alaska State Museum professional staff, a physical anthropologist, and a medical examiner with the State of Alaska, in consultation with the Muckleshoot Indian Tribe of the Muckleshoot Reservation, Washington; Nisqually Indian Tribe of the Nisqually Reservation, Washington; Puyallup Tribe of the Puyallup Reservation, Washington; and Tulalip Tribes of the Tulalip Reservation, Washington.

In 1957, two human crania representing a minimum of two individuals were donated to the Alaska Historical Library and Museum (now the Alaska State Museum), Juneau, AK, by Belle Simpson of Juneau, AK. The human remains were originally collected by Judge James Wickersham during his residence in Tacoma, WA, in 1883-1900. Museum records indicate that one cranium was removed from a canoe burial on Steilacoom Creek, Pierce County, WA, in 1892, and that the other cranium came from an unspecified location in the State of Washington. Since Judge Wickersham excavated in areas vacated as a result of the 1854 Medicine Creek Treaty, it is likely that the second cranium, listed in museum records as coming from ''Washington state,'' also came from the area around Tacoma, and that both human remains derive from 19th-century contexts. No known individuals were identified. No associated funerary objects are present.

Dr. Joel Irish, a physical anthropologist with the U.S. Department of Agriculture, Forest Service, examined the human remains in 1990. Both crania display an identical form of forehead flattening that was practiced by tribes of western Washington through the late 19th century. On the basis of the cranial modification exhibited by both sets of human remains, as well as other traits, Dr. Irish concluded that the human remains represented two Native American individuals.

On the basis of ethnohistorical, archeological, and geographic evidence presented at the time of consultation, the human remains are most likely affiliated with the Puyallup Tribe of the Puyallup Reservation, Washington. Archeological evidence from the area around Tacoma, WA, demonstrates a long uninterrupted occupation through the Prehistoric and Historic periods. The area where the human remains were collected falls within the historical territory of the Southern Lushootseed Salish and the Steilacoom people, who were consolidated on the Puyallup and Nisqually reservations as a result of the 1854 treaty. The present-day tribes most closely affiliated with the Southern Lushootseed Salish and the Steilacoom people are the Puyallup Tribe of the Puyallup Reservation, Washington and the Nisqually Indian Tribe of the Nisqually Reservation, Washington. The Nisqually Indian Tribe of the Nisqually Reservation, Washington supports the affiliation of the human remains to the Puyallup Tribe of the Puyallup Reservation, Washington.

Officials of the Alaska State Museum have determined that, pursuant to 25 U.S.C. 3001 (9-10), the human remains described above represent the physical remains of two individuals of Native American ancestry. Officials of the Alaska State Museum also have determined that, pursuant to 25 U.S.C. 3001 (2), there is a relationship of shared group identity that can be reasonably traced between the human remains and the Puyallup Tribe of the Puyallup Reservation, Washington.

Representatives of any other Indian tribe that believes itself to be culturally affiliated with the human remains should contact Bruce Kato, Chief Curator, Alaska State Museum, 395 Whittier Street, Juneau, AK 99801-1718, telephone (907) 465-4866, before June 2, 2003. Repatriation of the human remains to the Puyallup Tribe of the Puyallup Reservation, Washington may proceed after that date if no additional claimants come forward.

The Alaska State Museum is responsible for notifying the Muckleshoot Indian Tribe of the Muckleshoot Reservation, Washington; Nisqually Indian Tribe of the Nisqually Reservation, Washington; Puyallup Tribe of the Puyallup Reservation, Washington; and Tulalip Tribes of the Tulalip Reservation, Washington that this notice has been published.

Dated: March 20, 2003.

John Robbins,

Assistant Director, Cultural Resources.

[FR Doc. 03-10912 Filed 5–1–03; 8:45 am]

BILLING CODE 4310–70–S

DEPARTMENT OF THE INTERIOR

National Park Service

Notice of Inventory Completion: Bernice Pauahi Bishop Museum, Honolulu, HI

AGENCY: National Park Service, Interior.

ACTION: Notice.

Notice is hereby given in accordance with provisions of the Native Graves Protection and Repatriation Act, 25 U.S.C. 3003, Sec. 5, of the completion of an inventory of human remains from Moloka'i, HI, in the possession of the Bernice Pauahi Bishop Museum, Honolulu, HI.

This notice is published as part of the National Park Service's administrative responsibilities under NAGPRA, 25 U.S.C. 3003, Sec. 5 (d)(3). The determinations within this notice are the sole responsibility of the museum, institution, or Federal agency that has control of these Native American human remains and associated funerary objects. The National Park Service is not responsible for the determinations within this notice.

A detailed assessment of these human remains has been made by the Bishop Museum's professional staff in consultation with representatives from the Moloka'i Island Burial Council.

In 1952, human remains representing one individual were collected for the museum by Dr. K.P. Emory at the Makai Sink Shelter-Sand bluff area (50-Mo-B06-002; Mo site 9), Kaluakoi, Moloka'i, HI. The human remains are one human tooth. No known individual was identified. No associated funerary objects are present.

In 1952, human remains representing one individual were collected for the museum by Dr. K.P. Emory at the Mo'omomi Shelter/Kaiehu (50-Mo-B06-003; Mo Site 1), Kaluakoi, Moloka'i, HI. The human remains are one human tooth and a bag of human tooth

fragments. No known individual was identified. No associated funerary objects are present.

In 1971, human remains representing one individual were collected for the museum at the Kaupikiawa Cave (site Mo-B09-001), Kalaupapa, Moloka'i, HI. The human remains are one human tooth. No known individual was identified. No associated funerary objects are present.

Officials of the Bishop Museum have determined that, pursuant to 25 U.S.C. 3001, Sec. 2 (9) and 2 (10), the human remains listed above represent the physical remains of three individuals of Native American ancestry. Officials of the Bishop Museum also have determined that, pursuant to 25 U.S.C. 3001, Sec. 2 (2), there is a relationship of shared group identity that can be reasonably traced between these Native American human remains and associated funerary objects and the Moloka'i Island Burial Council, Hui Malama I Na Kupuna O Hawai'i Nei, and Office of Hawaiian Affairs.

Representatives of any other Native Hawaiian organization that believes itself to be culturally affiliated with these human remains should contact Dr. Guy Kaulukukui, Vice President of Cultural Studies, Bishop Museum, 1525 Bernice Street, Honolulu, HI, 96718-2704, telephone (808) 848-4126 before June 2, 2003. Repatriation of these human remains to the Moloka'i Island Burial Council, Hui Malama I Na Kupuna O Hawai'i Nei, and Office of Hawaiian Affairs may begin after that date if no additional claimants come forward.

The Bishop Museum is responsible for notifying the Moloka'i Island Burial Council, Hui Malama I Na Kupuna O Hawai'i Nei, and the Office of Hawaiian Affairs that this notice has been published.

Dated: October 8, 2002.

Robert Stearns,

Manager, National NAGPRA Program.

[FR Doc. 03–10913 Filed 5–1–02; 8:45 am]

BILLING CODE 4310–70–S

DEPARTMENT OF THE INTERIOR

National Park Service

Notice of Intent to Repatriate Cultural Items: Bernice Pauahi Bishop Museum, Honolulu, HI

AGENCY: National Park Service, Interior.

ACTION: Notice.

Notice is hereby given in accordance with provisions of the Native Graves Protection and Repatriation Act, 25 U.S.C. 3005, Sec. 7, of the intent to repatriate cultural items from Moloka'i, HI, in the possession of the Bernice Pauahi Bishop Museum, Honolulu, HI, that meet the definition of ''unassociated funerary objects'' under Section 2 of the Act.

This notice is published as part of the National Park Service's administrative responsibilities under NAGPRA, 25 U.S.C. 3003, Sec. 5 (d)(3). The determinations within this notice are the sole responsibility of the museum, institution, or Federal agency that has control of these cultural items. The National Park Service is not responsible for the determinations within this notice.

In the 1890s or early 1900s, Dr. C.M. Hyde purchased a small wooden image carved into a human form for the museum. According to accession records, Dr. Hyde purchased the carved human image on the island of Moloka'i from a ''native who found this idol wrapped in tapa with awa & bones of red fish in a cave.'' The cave is believed to have been a burial site.

In February, 1941, Jack Porteus collected a cowrie shell from Mo'omomi Sand Burials, Moloka'i, HI.

Excavation records indicate that the human remains with whom these funerary objects were associated were not collected, or were collected but are no longer within the Bishop Museum's collection.

A detailed assessment of these unassociated funerary objects was made by Bishop Museum's professional staff in consultation with representatives from the Moloka'i Island Burial Council.

Officials of the Bishop Museum have determined that, pursuant to 25 U.S.C. 3001, Sec 2 (3)(B), these two cultural items are reasonably believed to have been placed with or near individual human remains at the time of death or later as part of the death rite or ceremony and are believed, by a preponderance of the evidence, to have been removed from a specific burial site of an Native American individual. Officials of the Bishop Museum also have determined that, pursuant to 25 U.S.C. 3001, Sec. 2 (2), there is a relationship of shared group identity that can be reasonably traced between these unassociated funerary objects and the Moloka'i Island Burial Council, Hui Malama I Na Kupuna O Hawai'i Nei, and the Office of Hawaiian Affairs.

Representatives of any other Native Hawaiian organization that believes itself to be culturally affiliated with these unassociated funerary objects should contact Dr. Guy Kaulukukui, Vice President of Cultural Studies, Bishop Museum, 1525 Bernice Street, Honolulu, HI 96718-2704, telephone (808) 848-4126 before June 2, 2003. Repatriation of these unassociated funerary objects to the Moloka'i Island Burial Council, Hui Malama I Na Kupuna O Hawai'i Nei and Office of Hawaiian Affairs may begin after that date if no additional claimants come forward.

The Bishop Museum is responsible for notifying the Moloka'i Island Burial Council, Hui Malama I Na Kupuna O Hawai'i Nei, and Office of Hawaiian Affairs that this notice has been published.

Dated: October 8, 2002.

Robert Stearns,

Manager, National NAGPRA Program.

[FR Doc. 03–10914 Filed 5–1–02; 8:45 am]

BILLING CODE 4310–70–S

DEPARTMENT OF THE INTERIOR

National Park Service

Notice of Inventory Completion: Burke Museum, University of Washington, Seattle, WA

AGENCY: National Park Service, Interior.

ACTION: Notice.

Notice is here given in accordance with the Native American Graves Protection and Repatriation Act (NAGPRA), 25 U.S.C. 3003, of the completion of an inventory of human remains and associated funerary objects in the possession of the Burke Museum, University of Washington, Seattle, WA. The human remains and associated funerary objects were removed from the Fort Rock Valley area, Lake County, OR.

This notice is published as part of the National Park Service's administrative responsibilities under NAGPRA, 25 U.S.C. 3003 (d)(3). The determinations within this notice are the sole responsibility of the museum, institution, or Federal agency that has control of these Native American human remains and associated funerary objects. The National Park Service is not responsible for the determinations within this notice.

A detailed assessment of the human remains was made by the Burke Museum professional staff in consultation with representatives of the Burns Paiute Tribe of the Burns Paiute Indian Colony of Oregon, Confederated Tribes of the Warm Springs Reservation of Oregon, Klamath Indian Tribe of Oregon, and Modoc Tribe of Oklahoma.

Between 1971 and 1972, human remains representing a minimum of one adult individual were removed by Dr. Harold G. Bergen from a site in Lake

County, OR, designated by Dr. Bergen as 35Q. The human remains were held by Dr. Bergen until 1989 when they were accessioned by the Burke Museum (Accession no. 1989-57). No known individual was identified. According to Dr. Bergen's field notes, animal bones were uncovered with these human remains, but the animal bones were not accessioned. No associated funerary objects are present.

In 1972, human remains representing a minimum of two individuals, an adult and a juvenile, were removed from a site in Lake County, OR, near the Fort Rock Valley area. This site was designated by Dr. Bergen as 35A. The human remains were held by Dr. Bergen until 1989 when they were accessioned by the Burke Museum (Accession no. 1989-57). No known individuals were identified. The one associated funerary object is an obsidian knife.

In 1973, human remains representing one individual were removed from a site in Lake County, OR, near the Fort Rock Valley area, designated by Dr. Bergen as site 35R. The human remains were held by Dr. Bergen until 1989 when they were accessioned by the Burke Museum (Accession no. 1989-57). No known individual was identified. The two associated funerary objects are artiodactyl femur fragments.

According to John R. Swanton's 1968 book ''The Indian Tribes of North America,'' the Walpapi and Yahuskin bands inhabited the shores of Goose, Silver, Warner, and Harney Lakes, OR, and in the ''Smithsonian Handbook of North American Indians,'' the Yahuskin band is noted as an aboriginal inhabitant of the Fort Rock Valley area. The Fort Rock Valley area is within the boundaries of lands ceded by the Klamath and Modoc Tribes and the Yahooskin Band of Snake Indians by the terms of the ''Treaty of Klamath Lake, Oregon with the Klamath, Modoc, and Yahooskin Band of Snake, October 14, 1864.'' These ceded lands became part of the Klamath Reservation, where, according to Robert Ruby and John Brown in ''A Guide to the Indian Tribes of the Pacific Northwest,'' the Walpapi began to settle between 1867 and 1870.

Based on geographical information provided by tribal representatives during consultation, the archeological provenience of the human remains, ethnohistorical data, and the continuity of technology of material culture found with the human remains, museum officials have determined that the human remains and associated funerary objects are culturally affiliated with the Walpapi Band and the Yahooskin Band of Snake Indians, which are today represented by the Klamath Indian Tribe of Oregon.

Officials of the Burke Museum have determined that, pursuant to 25 U.S.C. 3001 (9-10), the human remains described above represent the physical remains of four individuals of Native American ancestry. Officials of the Burke Museum also have determined that, pursuant to 25 U.S.C. 3001 (3)(A), the three objects listed above are reasonably believed to have been placed with or near individual human remains at the time of death or later as part of the death rite or ceremony. Lastly, officials of the Burke Museum have determined that, pursuant to 25 U.S.C. 3001 (2), there is a relationship of shared group identity that can be reasonably traced between the Native American human remains and associated funerary objects and the Klamath Indian Tribe of Oregon.

Representatives of any other Indian tribe that believes itself to be culturally affiliated with the human remains and associated funerary objects should contact Dr. Peter Lape, Curator of Archaeology, Burke Museum, Box 353010, University of Washington, Seattle, WA 98195, telephone (206) 685-2282, before June 2, 2003. Repatriation of the human remains and associated funerary objects to the Klamath Indian Tribe of Oregon may proceed after that date if no additional claimants come forward.

The Burke Museum is responsible for notifying Burns Paiute Tribe of the Burns Paiute Indian Colony of Oregon, Confederated Tribes of the Warm Springs Reservation of Oregon, Klamath Indian Tribe of Oregon, and Modoc Tribe of Oklahoma that this notice has been published.

Dated: April 9, 2003.

John Robbins,

Assistant Director, Cultural Resources.

[FR Doc. 03-10918 Filed 5–1–03; 8:45 am]

BILLING CODE 4310–70–S

DEPARTMENT OF THE INTERIOR

National Park Service

Notice of Intent to Repatriate Cultural Items: Burke Museum, University of Washington, Seattle, WA

AGENCY: National Park Service, Interior.

ACTION: Notice.

Notice is here given in accordance with the Native American Graves Protection and Repatriation Act (NAGPRA), 25 U.S.C. 3005, of the intent to repatriate cultural items in the possession of the Burke Museum, University of Washington, Seattle, WA, that meet the definition of ''unassociated funerary objects'' under 25 U.S.C. 3001.

This notice is published as part of the National Park Service's administrative responsibilities under NAGPRA, 25 U.S.C. 3003 (d)(3). The determinations within this notice are the sole responsibility of the museum, institution, or Federal agency that has control of the cultural items. The National Park Service is not responsible for the determinations within this notice.

The 244 cultural items are 3 strings of re-strung shell beads, 6 glass beads, 6 fragments of unidentifiable nonhuman bone (1 burned), 1 broken metal gorget, 1 metal thimble, 2 obsidian fragments, 4 pebbles, 164 glass beads, 48 fused glass pieces, 3 fused glass fragments with unidentifiable bone attached, and 6 necklaces of glass and shell beads.

At an unknown date in the late 19th century, Dr. James Taylor White collected archeological materials from Siskiyou County, CA. The collection included three strings of re-strung shell beads and six glass beads, all of which were donated by Mrs. James T. White to the Burke Museum, and formally accessioned in 1904 (Accession no. 846). Accession records indicate that these strings of beads were found in graves. The Burke Museum has no documentation indicating that human remains were collected. Provenience information indicates that the cultural items originated from areas on the Klamath River, Siskiyou County, CA, and on Shovel Creek, Siskiyou County, CA.

In 1925, Dr. Leslie Spier removed cultural items from a cremation along the middle Williamson River near Klamath Lake, Klamath County, OR. The objects collected by Dr. Spier are 6 fragments of unidentifiable nonhuman bone, including a fragment of burned bone, 1 broken metal gorget, 1 metal thimble, 2 obsidian fragments, 4 pebbles, 164 glass beads, 48 fused glass pieces, and 3 fused glass fragments with unidentifiable bone attached. Dr. Spier donated the collection to the Burke Museum the same year. The Burke Museum has no documentation indicating that human remains were collected. The mortuary practices are consistent with Klamath and Modoc customs.

In 1971, Charles Gazzam purchased six necklaces of glass and shell beads that originated from Tule Lake, Siskiyou County, CA. This collection was donated to the Burke Museum and accessioned in 1976 (Accession no.

1976-38). A note on the accession record reads, ''from graves?''

The Williamson River near Klamath Lake, Klamath County, OR; the Klamath River, Siskiyou County, CA; Shovel Creek on the Klamath River, Siskiyou County, CA; and Tule Lake, Siskiyou County, CA, are all within the boundaries of lands ceded by the Klamath and Modoc Tribes and the Yahooskin Band of Snake Indians in the ''Treaty of Klamath Lake, Oregon with the Klamath, Modoc, and Yahooskin Band of Snake, October 14, 1864.'' John R. Swanton, in his 1968 book, ''The Indian Tribes of North America,'' draws on historical documentation and notes that the areas of Klamath Lake and the Williamson River, Klamath County, OR, are within the aboriginal territory of the villages and bands associated with the Klamath, and that the areas surrounding Tule Lake, Siskiyou County, CA, are within the aboriginal territory of the villages and bands associated with the Modoc. Based on archeological provenience, historical documentation, and geographical data provided by tribal representatives during consultation, officials of the Burke Museum have determined that the cultural items listed above are of Native American origin and that they are affiliated with the Klamath and Modoc Tribes and the Yahooskin Band of Snake Indians referred to in the 1864 Treaty. These groups are represented by the present-day Klamath Indian Tribe of Oregon. The Modoc Tribe of Oklahoma may also have a relationship to cultural items from this area, but they have informed the museum that the Klamath may act on their behalf.

Officials of the Burke Museum have determined that, pursuant to 25 U.S.C. 3001 (3)(B), the cultural items are reasonably believed to have been placed with or near individual human remains at the time of death or later as part of the death rite or ceremony and are believed, by a preponderance of the evidence, to have been removed from specific burial sites of Native American individuals. Officials of the Burke Museum also have determined that, pursuant to 25 U.S.C. 3001 (2), there is a relationship of shared group identity that can be reasonably traced between the unassociated funerary objects and the Klamath Indian Tribe of Oregon.

Representatives of any other Indian tribe that believes itself to be culturally affiliated with the unassociated funerary objects should contact Dr. Peter Lape, Curator of Archaeology, Burke Museum, Box 353010, University of Washington, Seattle, WA 98195, telephone (206) 685-2282, before June 2, 2003. Repatriation of the unassociated funerary objects to the Klamath Indian Tribe of Oregon may proceed after that date if no additional claimants come forward.

The Burke Museum, University of Washington, is responsible for notifying the Klamath Indian Tribe of Oregon and the Modoc Tribe of Oklahoma that this notice has been published.

Dated: April 9, 2003.

John Robbins,

Assistant Director, Cultural Resources.

[FR Doc. 03–10919 Filed 5–1–03; 8:45 am]

BILLING CODE 4310–70–S

DEPARTMENT OF THE INTERIOR

National Park Service

Notice of Intent to Repatriate Cultural Items: Springfield Science Museum, Springfield, MA: Correction

AGENCY: National Park Service, Interior.

ACTION: Notice.

Notice is here given in accordance with the Native American Graves Protection and Repatriation Act (NAGPRA), 43 CFR 10.8 (f), of the intent to repatriate cultural items in the possession of the Springfield Science Museum, Springfield, MA, that meet the definition of unassociated funerary objects at 25 U.S.C. 3001 (3)(B).

This notice is published as part of the National Park Service's administrative responsibilities under NAGPRA, 25 U.S.C. 3003 (d)(3). The determinations within this notice are the sole responsibility of the museum, institution, or Federal agency that has control of the cultural items. The National Park Service is not responsible for the determinations within this notice.

This notice and a companion notice of inventory completion correction replace the notice of inventory completion that was published in the Federal Register on April 16, 1996 (FR Doc. 96-9366, page 16643). The two correction notices revise the total number of human remains and funerary objects and provide additional evidence for cultural affiliation. These corrections are necessary as the result of reevaluation of the collection and accompanying documentation that reduces the numbers of cultural items considered culturally affiliated with the Santa Ynez Band of Chumash Mission Indians of the Santa Ynez Reservation, California. The total number of human remains is reduced from a minimum of 2 to 1 individual. The total number of funerary objects is reduced from 200 to 65 associated funerary objects and 39 unassociated funerary objects. The 39 unassociated funerary objects are described in this notice of intent to repatriate correction; the human remains and associated funerary objects are described in the companion notice of inventory completion.

In 1908, Dr. Jacob T. Bowne removed 39 cultural items from burial sites on Santa Cruz Island, Santa Rosa Island, and Goleta, all in Santa Barbara County, CA. The cultural items are 25 shell beads from Santa Cruz Island; 1 lead bullet, 11 leaf shaped stone blades, and 1 shell pendant from Santa Rosa Island; 1 stone tube pipe from Goleta. Dr. Bowne donated these cultural items to the Springfield Science Museum in 1925.

Museum documentation indicates that the cultural items were removed from specific burial sites. Archeological evidence indicates that the sites from which the cultural items were removed were used as burial/funerary areas from the Late Precontact period to the mid-19th century (A.D. 1400 to 1850). Analyses of funerary practices, tools, ornamentation, and funerary objects at various components of the site indicate cultural continuity throughout the Late Precontact period to the mid-19th century. Consultation evidence presented by representatives of the Santa Ynez Band of Chumash Mission Indians of the Santa Ynez Reservation, California indicates that funerary practices, tool manufacture, ornamentation types, and funerary objects are identical to Chumash traditional practices documented in the Historic period. Overall evaluation of the totality of the circumstances and evidence indicates a probable cultural affiliation between the cultural items and several Chumash Indian groups, including the Santa Ynez Band of Chumash Mission Indians of the Santa Ynez Reservation, California and several nonfederally recognized Indian groups.

Officials of the Springfield Science Museum have determined that, pursuant to 25 U.S.C. 3001 (3)(B), the 39 cultural items are reasonably believed to have been placed with or near individual human remains at the time of death or later as part of a death rite or ceremony and are believed, by a preponderance of the evidence, to have been removed from specific burials sites of Native American individuals. Officials of the Springfield Science Museum also have determined that, pursuant to 25 U.S.C. 3001 (2), there is a relationship of shared group identity that can be reasonably traced between the unassociated funerary objects and the Santa Ynez Band of Chumash Mission Indians of the Santa Ynez Reservation, California.

Representatives of any Indian tribe that believes itself to be culturally affiliated with the unassociated funerary objects should contact David Stier, Director, Springfield Science Museum, 236 State Street, Springfield, MA 01103, telephone (413) 263-6800, extension 321, before June 2, 2003. Repatriation of the unassociated funerary objects to the Santa Ynez Band of Chumash Mission Indians of the Santa Ynez Reservation, California may proceed after that date if no additional claimants come forward.

The Springfield Science Museum is responsible for notifying the Santa Ynez Band of Chumash Mission Indians of the Santa Ynez Reservation, California; and Esselin Nation and Ti'at Society/Traditional Council of Pima (two nonfederally recognized Indian groups) that this notice has been published.

Dated: April 8, 2003.

John Robbins,

Assistant Director, Cultural Resources.

[FR Doc. 03–10915 Filed 5–1–03; 8:45 am]

BILLING CODE 4310–70–S

DEPARTMENT OF THE INTERIOR

National Park Service

Notice of Inventory Completion for Native American Human Remains and Associated Funerary Objects in the Possession of the Springfield Science Museum, Springfield, MA; Correction

AGENCY: National Park Service, Interior.

ACTION: Notice.

Notice is here given in accordance with the Native American Graves Protection and Repatriation Act (NAGPRA), 25 U.S.C. 3003, of the completion of an inventory of human remains and associated funerary objects in the possession of the Springfield Science Museum, Springfield, MA. The human remains and associated funerary objects were recovered from an unnamed site in Santa Barbara County, CA.

This notice is published as part of the National Park Service's administrative responsibilities under NAGPRA, 25 U.S.C. 3003 (d)(3). The determinations within this notice are the sole responsibility of the museum, institution, or Federal agency that has control of the Native American human remains and associated funerary objects. The National Park Service is not responsible for the determinations within this notice.

This notice and a companion notice of intent to repatriate correction replace the notice of inventory completion that was published in the Federal Register on April 16, 1996 (FR Doc. 96-9366, page 16643). The two correction notices revise the total number of human remains and funerary objects and provide additional evidence for cultural affiliation. These corrections are necessary as the result of reevaluation of the collection and accompanying documentation that reduces the numbers of cultural items considered culturally affiliated with the Santa Ynez Band of Chumash Mission Indians of the Santa Ynez Reservation, California. The total number of human remains is reduced from a minimum of two to one individual. The total number of funerary objects is reduced from 200 to 65 associated funerary objects and 39 unassociated funerary objects. The human remains and associated funerary objects are described in this notice of inventory completion correction; the unassociated funerary objects are described in the companion notice of intent to repatriate.

A detailed assessment of the human remains and associated funerary objects was made by the Springfield Science Museum professional staff in consultation with representatives of the Santa Ynez Band of Chumash Mission Indians of the Santa Ynez Reservation, California. The Esselin Nation and Ti'at Society/Traditional Council of Pima (two nonfederally recognized Indian groups) also were consulted regarding the human remains and associated funerary objects.

In 1909, human remains representing a minimum of one individual were removed by Dr. Jacob T. Bowne from an unnamed site in Santa Barbara County, CA. Dr. Bowne donated the human remains to the Springfield Science Museum in 1925. No known individual was identified. The 65 associated funerary objects are 46 obsidian, quartz, and flint flakes; 12 clam and snail shells; and 7 mammal and bird bones.

Archeological evidence indicates that the site was used as a burial/funerary area from the Late Precontact period to the mid-19th century (A.D. 1400 to 1850). Analysis of the funerary practices, tools, ornamentation, and funerary objects at various components of the site indicates cultural continuity throughout the Late Precontact period to the mid-19th century. Consultation evidence presented by representatives of the Santa Ynez Band of Chumash Mission Indians of the Santa Ynez Reservation, California indicates that funerary practices, tool manufacture, ornamentation types, and funerary objects are identical to Chumash traditional practices documented in the Historic period. Overall evaluation of the totality of the circumstances and evidence indicates a probable cultural affiliation between the human remains and associated funerary objects and several Chumash Indian groups, including the Santa Ynez Band of Chumash Mission Indians of the Santa Ynez Reservation, California and several nonfederally recognized Indian groups.

Officials of the Springfield Science Museum have determined that, pursuant to 25 U.S.C. 3001 (9-10), the human remains described above represent the physical remains of one individual of Native American ancestry. Officials of the Springfield Science Museum also have determined that, pursuant to 25 U.S.C. 3001 (3)(A), the 65 objects listed above are reasonably believed to have been placed with or near individual human remains at the time of death or later as part of a death rite or ceremony. Lastly, officials of the Springfield Science Museum have determined that, pursuant to 25 U.S.C. 3001 (2), there is a relationship of shared group identity that can be reasonably traced between the Native American human remains and associated funerary objects and the Santa Ynez Band of Chumash Mission Indians of the Santa Ynez Reservation, California.

Representatives of any other Indian tribe that believes itself to be culturally affiliated with the human remains and associated funerary objects should contact David Stier, Director, Springfield Science Museum, 236 State Street, Springfield, MA 01103, telephone (413) 263-6800, extension 321, before June 2, 2003. Repatriation of the human remains and associated funerary objects to the Santa Ynez Band of Chumash Mission Indians of the Santa Ynez Reservation, California may proceed after that date if no additional claimants come forward.

The Springfield Science Museum is responsible for notifying the Santa Ynez Band of Chumash Mission Indians of the Santa Ynez Reservation, California; Esselin Nation; and Ti'at Society/Traditional Council of Pima that this notice has been published.

Dated: April 8, 2003.

John Robbins,

Assistant Director, Cultural Resources.

[FR Doc. 03–10916 Filed 5–1–03; 8:45 am]

BILLING CODE 4310–70–S

DEPARTMENT OF THE INTERIOR

National Park Service

Notice of Inventory Completion: University of California, Riverside, Riverside, CA

AGENCY: National Park Service, Interior.

ACTION: Notice.

Notice is here given in accordance with provisions of the Native American Graves Protection and Repatriation Act (NAGPRA), 25 U.S.C. 3003, of the completion of an inventory of human remains in the possession of the University of California, Riverside, Riverside, CA. The human remains were removed from a site in Riverside County, CA.

This notice is published as part of the National Park Service's administrative responsibilities under NAGPRA, 25 U.S.C. 3003 (d)(3). The determinations within this notice are the sole responsibility of the museum, institution, or Federal agency that has control of the Native American human remains. The National Park Service is not responsible for the determinations within this notice.

A detailed assessment of the human remains was made by professional staff of the University of California, Riverside in consultation with the Cahuilla Inter-Tribal Repatriation Committee representing the Agua Caliente Band of Cahuilla Indians of the Agua Caliente Indian Reservation, California; Augustine Band of Cahuilla Mission Indians of the Augustine Reservation, California; Cabazon Band of Cahuilla Mission Indians of the Cabazon Reservation, California; Cahuilla Band of Mission Indians of the Cahuilla Reservation, California; Los Coyotes Band of Cahuilla Mission Indians of the Los Coyotes Reservation, California; Morongo Band of Cahuilla Mission Indians of the Morongo Reservation, California; Ramona Band or Village of Cahuilla Mission Indians of California; Santa Rosa Band of Cahuilla Mission Indians of the Santa Rosa Reservation, California; and Torres-Martinez Band of Cahuilla Mission Indians of California.

In 1977, human remains representing one individual were recovered by the University of California, Riverside from the Lochmiller site (CA-RIV-102 and CA-RIV-119), Riverside County, CA. The remains are a single bone fragment. No known individual was identified. No associated funerary objects are present. The Lochmiller site is believed to be the Cahuilla village complex of Pahsitnah that was occupied during the Historic period (after A.D. 1770). Archeological evidence indicates that the Lochmiller site was used by the mountain division of the Cahuilla tribe, represented today by the Cahuilla Band of Mission Indians of the Cahuilla Reservation, California; Los Coyotes Band of Cahuilla Mission Indians of the Los Coyotes Reservation, California; Ramona Band or Village of Cahuilla Mission Indians of California; and Santa Rosa Band of Cahuilla Mission Indians of the Santa Rosa Reservation, California.

In 1982, human remains representing a minimum of one individual were excavated by the Archaeological Resource Management Corporation at site CA-RIV-1180, Riverside County, CA. The remains are seven unidentified elements originally collected with faunal remains from the site. No known individual was identified. No associated funerary objects are present. Site CA-RIV-1180 is believed to have been occupied during the Late Prehistoric period (A.D. 1500 to 1770), based on its association with ceramic-age deposits and on the geomorphic context of the late prehistoric shoreline of Lake Cahuilla. Archeological evidence indicates that site CA-RIV-1180 was used by the desert division of the Cahuilla tribe, represented today by the Augustine Band of Cahuilla Mission Indians of the Augustine Reservation, California; Cabazon Band of Cahuilla Mission Indians of the Cabazon Reservation, California; and Torres-Martinez Band of Cahuilla Mission Indians of California.

Officials of the University of California, Riverside have determined that, pursuant to 25 U.S.C. 3001 (9-10), the human remains described above represent the physical remains of two individuals of Native American ancestry. Officials of the University of California, Riverside also have determined that, pursuant to 25 U.S.C. 3001 (2), there is a relationship of shared group identity that can be reasonably traced between the Native American human remains and the Cahuilla Inter-Tribal Repatriation Committee, representing the Agua Caliente Band of Cahuilla Indians of the Agua Caliente Indian Reservation, California; Augustine Band of Cahuilla Mission Indians of the Augustine Reservation, California; Cabazon Band of Cahuilla Mission Indians of the Cabazon Reservation, California; Cahuilla Band of Mission Indians of the Cahuilla Reservation, California; Los Coyotes Band of Cahuilla Mission Indians of the Los Coyotes Reservation, California; Morongo Band of Cahuilla Mission Indians of the Morongo Reservation, California; Ramona Band or Village of Cahuilla Mission Indians of California; Santa Rosa Band of Cahuilla Mission Indians of the Santa Rosa Reservation, California; and Torres-Martinez Band of Cahuilla Mission Indians of California.

Representatives of any other Indian tribe that believes itself to be culturally affiliated with the human remains should contact Philip J. Wilke, Department of Anthropology, 1334 Watkins Hall, University of California, Riverside, CA 92521-0418, telephone (909) 787-5524, before June 2, 2003. Repatriation of the human remains to the Cahuilla Inter-Tribal Repatriation Committee, representing the Agua Caliente Band of Cahuilla Indians of the Agua Caliente Indian Reservation, California; Augustine Band of Cahuilla Mission Indians of the Augustine Reservation, California; Cabazon Band of Cahuilla Mission Indians of the Cabazon Reservation, California; Cahuilla Band of Mission Indians of the Cahuilla Reservation, California; Los Coyotes Band of Cahuilla Mission Indians of the Los Coyotes Reservation, California; Morongo Band of Cahuilla Mission Indians of the Morongo Reservation, California; Ramona Band or Village of Cahuilla Mission Indians of California; Santa Rosa Band of Cahuilla Mission Indians of the Santa Rosa Reservation, California; and Torres-Martinez Band of Cahuilla Mission Indians of California may proceed after that date if no additional claimants come forward.

The University of California, Riverside is responsible for notifying the Cahuilla Inter-Tribal Repatriation Committee and its constituent members, the Agua Caliente Band of Cahuilla Indians of the Agua Caliente Indian Reservation, California; Augustine Band of Cahuilla Mission Indians of the Augustine Reservation, California; Cabazon Band of Cahuilla Mission Indians of the Cabazon Reservation, California; Cahuilla Band of Mission Indians of the Cahuilla Reservation, California; Los Coyotes Band of Cahuilla Mission Indians of the Los Coyotes Reservation, California; Morongo Band of Cahuilla Mission Indians of the Morongo Reservation, California; Ramona Band or Village of Cahuilla Mission Indians of California; Santa Rosa Band of Cahuilla Mission Indians of the Santa Rosa Reservation, California; and Torres-Martinez Band of Cahuilla Mission Indians of California that this notice has been published.

Dated: March 17, 2003.

John Robbins,

Assistant Director, Cultural Resources.

[FR Doc. 03–10911 Filed 5–1–03; 8:45 am]

BILLING CODE 4310–70–S

DEPARTMENT OF THE INTERIOR

National Park Service

Notice of Inventory Completion: University of California, Riverside, Riverside, CA

AGENCY: National Park Service, Interior.

ACTION: Notice.

Notice is here given in accordance with provisions of the Native American Graves Protection and Repatriation Act (NAGPRA), 25 U.S.C. 3003, of the completion of an inventory of human remains in the possession of the University of California, Riverside, Riverside, CA. The human remains were removed from a site in Yucaipa, San Bernardino County, CA.

This notice is published as part of the National Park Service's administrative responsibilities under NAGPRA, 25 U.S.C. 3003 (d)(3). The determinations within this notice are the sole responsibility of the museum, institution, or Federal agency that has control of the Native American human remains. The National Park Service is not responsible for the determinations within this notice.

A detailed assessment of the human remains was made by professional staff of the University of California, Riverside in consultation with the Morongo Band of Cahuilla Mission Indians of the Morongo Reservation, California and San Manual Band of Serrano Mission Indians of the San Manual Reservation, California.

In 1976-1977, human remains representing one individual were excavated by the University of California, Riverside from site CA-SBR-1000, Yucaipa, San Bernardino County, CA. The remains are several fragments of a human cranium. A human metatarsal was also catalogued but cannot be located in the collection. No known individual was identified. No associated funerary objects are present. Site CA-SBR-1000 includes both Archaic period (6500 B.C. to A.D. 500) and Late Prehistoric/Protohistoric period (A.D. 1500 to 1825) components. The human remains are believed to have come from the Late Prehistoric/Protohistoric component of the site.

Ethnohistoric evidence indicates that the area around Yucaipa, CA, was occupied by the Serrano tribe during the Protohistoric period. In 1918, Serrano consultants identified the town of Yucaipa, where site CA-SBR-1000 is located, as the site of the Serrano village of Jukai'pa', Jukai'pa't, or Jukai'pit. The Serrano tribe is currently represented by the Morongo Band of Cahuilla Mission Indians of the Morongo Reservation, California and San Manual Band of Serrano Mission Indians of the San Manual Reservation, California.

Officials of the University of California, Riverside have determined that, pursuant to 25 U.S.C. 3001 (9-10), the human remains described above represent the physical remains of one individual of Native American ancestry. Officials of the University of California, Riverside also have determined that, pursuant to 25 U.S.C. 3001 (2), there is a relationship of shared group identity that can be reasonably traced between the Native American human remains and the Morongo Band of Cahuilla Mission Indians of the Morongo Reservation, California and San Manual Band of Serrano Mission Indians of the San Manual Reservation, California.

Representatives of any other Indian tribe that believes itself to be culturally affiliated with the human remains should contact Philip J. Wilke, Department of Anthropology, 1334 Watkins Hall, University of California, Riverside, Riverside, CA 92521-0418, telephone (909) 787-5524, before June 2, 2003. Repatriation of the human remains to the Morongo Band of Cahuilla Mission Indians of the Morongo Reservation, California and San Manual Band of Serrano Mission Indians of the San Manuel Reservation, California may proceed after that date if no additional claimants come forward.

The University of California, Riverside is responsible for notifying the Morongo Band of Cahuilla Mission Indians of the Morongo Reservation, California and San Manual Band of Serrano Mission Indians of the San Manual Reservation, California that this notice has been published.

Dated: March 17, 2003.

John Robbins,

Assistant Director, Cultural Resources.

[FR Doc. 03–10917 Filed 5–1–03; 8:45 am]

BILLING CODE 4310–70–S

DEPARTMENT OF THE INTERIOR

Office of Surface Mining Reclamation and Enforcement

Notice of Proposed Information Collection for 1029–0103

AGENCY: Office of Surface Mining Reclamation and Enforcement.

ACTION: Notice and request for comments.

SUMMARY: In compliance with the Paperwork Reduction Act of 1995, the Office of Surface Mining (OSM) is announcing its intention to renew its authority for the collection of information for noncoal reclamation, 30 CFR Part 875.

DATES: Comments on the proposed information collection must be received by July 1, 2003 to be assured of consideration.

ADDRESSES: Comments may be mailed to John A. Trelease, Office of Surface Mining Reclamation and Enforcement, 1951 Constitution Ave, NW., Room 210–SIB, Washington, DC 20240. Comments may also be submitted electronically to *jtrelease@osmre.gov.*

FOR FURTHER INFORMATION CONTACT: To request a copy of the information collection request, explanatory information and related forms, contact John A. Trelease, at (202) 208–2783 or at the e-mail address listed above.

SUPPLEMENTARY INFORMATION: The Office of Management and Budget (OMB) regulations at 5 CFR 1320, which implement provisions of the Paperwork Reduction Act of 1995 (Pub. L. 104–13), require that interested members of the public and affected agencies have an opportunity to comment on information collection and recordkeeping activities (*see* 5 CFR 1320.8 (d)). This notice identifies an information collection activity that OSM will submit to OMB for extension. This collection is contained in 30 CFR part 875, Noncoal reclamation.

OSM has revised burden estimates, where appropriate, to reflect current reporting levels or adjustments based on reestimates of burden or respondents. OSM will request a 3-year term of approval for this information collection activity.

Comments are invited on: (1) The need for the collection of information for the performance of the functions of the agency; (2) the accuracy of the agency's burden estimates; (3) ways to enhance the quality, utility and clarity of the information collection; and (4) ways to minimize the information collection burden on respondents, such as use of automated means of collection of the information. A summary of the public comments will accompany OSM's submission of the information collection request to OMB.

This notice provides the public with 60 days in which to comment on the following information collection activity:

Title: Noncoal reclamation, 30 CFR part 875.

OMB Control Number: 1029–0103.

Summary: This part establishes procedures and requirements for State and Indian tribes to conduct noncoal reclamation under abandoned mine land funding. The information is needed

to assure compliance with the Surface Mining Control and Reclamation Act of 1977.

Bureau Form Numbers: OSM–47, OSM–51.

Frequency of Collection: Once.

Description of Respondents: State governments and Indian Tribes.

Total Annual Responses: 10.

Total Annual Burden Hours: 199.

Dated: April 28, 2003.

Richard G. Bryson,

Chief, Division of Regulatory Support.

[FR Doc. 03–1081 Filed 5–1–03; 8:45 am]

BILLING CODE 4310–05–M

INTERNATIONAL TRADE COMMISSION

[Inv. No. 337–TA–486]

Certain Agricultural Tractors, Lawn Tractors, Riding Lawnmowers, and Components Thereof; Notice of Commission Decision Not To Review an Initial Determination Terminating the Investigation as to a Respondent on the Basis of a Consent Order; Issuance of Consent Order; and Request for Submissions on Remedy, the Public Interest, and Bonding

AGENCY: International Trade Commission.

ACTION: Notice.

SUMMARY: Notice is hereby given that the U.S. International Trade Commission has determined not to review the presiding administrative law judge's (''ALJ's'') initial determination (''ID'') terminating the above-captioned investigation as to a respondent on the basis of a consent order. In connection with final disposition of the investigation, the Commission is requesting briefing on remedy, the public interest, and the appropriate bond during the period of Presidential review.

FOR FURTHER INFORMATION CONTACT: Clara Kuehn, Esq., Office of the General Counsel, U.S. International Trade Commission, 500 E Street, SW., Washington, DC 20436, telephone (202) 205–3012. Copies of the ALJ's ID and all other nonconfidential documents filed in connection with this investigation are or will be available for inspection during official business hours (8:45 a.m. to 5:15 p.m.) in the Office of the Secretary, U.S. International Trade Commission, 500 E Street, SW., Washington, DC 20436, telephone 202–205–2000. General information concerning the Commission may also be obtained by accessing its Internet server (*http://www.usitc.gov*). The public record for this investigation may be viewed on the Commission's electronic docket (EDIS–ON–LINE) at *http://edis.usitc.gov.* Hearing-impaired persons are advised that information on this matter can be obtained by contacting the Commission's TDD terminal on 202–205–1810.

SUPPLEMENTARY INFORMATION: The Commission instituted this investigation on February 10, 2003, based on a complaint and motion for temporary relief filed by New Holland North America, Inc. (''complainant'') of New Holland, PA. 68 FR 6772 (Feb. 10, 2003). The complaint alleged violations of section 337 of the Tariff Act of 1930 in the importation into the United States, sale for importation, and sale within the United States after importation of certain tractors and components thereof by reason of misappropriation of New Holland's trade dress. The notice of investigation identified three respondents: Beiqi Futian Automobile Co., Ltd. (''Futian'') of Beijing, China; Cove Equipment, Inc. (''Cove'') of Conyers Georgia; and Northwest Products, Inc. (''Northwest'') of Auburn, Washington. *Id.* On March 19, 2003, the ALJ issued an ID (Order No. 6) finding respondent Futian in default. On March 31, 2003, the ALJ issued an ID (Order No. 8) amending the complaint and notice of investigation to clarify the identity of Cove and to add Brian Navalinsky of Conyers, Georgia as an additional respondent. On April 1, 2003, the ALJ issued an ID (Order No. 9) terminating respondents Cove and Navalinsky on the basis of a consent order. Those IDs were not reviewed by the Commission.

On March 26, 2003, complainant and Northwest moved pursuant to Commission rule 210.21(c)(1)(ii) to terminate the investigation with respect to Northwest based upon a settlement agreement and consent order. On March 28, 2003, the Commission investigative attorney filed a response supporting the joint motion. On April 2, 2003, complainant filed a declaration pursuant to section 337(g)(1) and Commission rule 210.16(c)(1) seeking immediate entry of permanent relief against respondent Futian.

On April 8, 2003, the ALJ issued an ID (Order No. 10) granting the motion to terminate the investigation as to respondent Northwest. In his ID, the ALJ noted that all respondents in the investigation had been found to be in default or had reached settlements with complainant. He stated that ''[i]f the Commission adopts this Initial Determination or otherwise terminates the investigation as to Northwest and also terminates the investigation as to the other respondents, no respondent will remain in this investigation. Therefore, any outstanding motions (including Complainant's Motion for temporary relief) will be moot, and this investigation will be terminated in its entirety.'' ID at 5. No petitions for review of the ID were filed.

Section 337(g)(1), 19 U.S.C. 1337(g)(1) and Commission rule 210.16(c), 19 CFR 210.16(c), authorize the Commission to order limited relief against a respondent found in default unless, after consideration of public interest factors, it finds that such relief should not issue. In this investigation, respondent Futian has been found in default and complainant has requested issuance of a limited exclusion order that would deny entry to certain agricultural tractors, lawn tractors, and riding lawn mowers, and components thereof manufactured by or for Futian. Complainant also requests issuance of a cease and desist order. If the Commission decides to issue remedial orders against Futian, it must consider what the amount of the bond should be during the Presidential review period.

In connection with the final disposition of this investigation, the Commission may issue remedial orders. The requested remedies are (1) a limited exclusion order that could result in the exclusion from entry into the United States of certain agricultural tractors, lawn tractors, and riding lawn mowers, and components thereof manufactured by or for Futian, and (2) a cease and desist order that could result in prohibiting Futian and its United States affiliates or agents from importing, marketing, distributing, displaying, assembling, installing, servicing, or selling certain agricultural tractors, lawn tractors, and riding lawn mowers, and components thereof within the United States. Accordingly, the Commission is interested in receiving written submissions that address whether either or both such orders should be issued. If a party seeks exclusion of an article from entry into the United States for purposes other than entry for consumption, it should so indicate and provide information establishing that activities involving other types of entry either are adversely affecting it or likely to do so. For background, *see Certain Devices for Connecting Computers via Telephone Lines,* Inv. No. 337–TA–360, USITC Pub. No. 2843 (December 1994) (Commission Opinion).

If the Commission contemplates some form of remedy, it must consider the effects of that remedy upon the public interest. The factors the Commission will consider in this investigation

include the effect that remedial orders would have on (1) the public health and welfare, (2) competitive conditions in the U.S. economy, (3) U.S. production of articles that are like or directly competitive with those that are subject to investigation, and (4) U.S. consumers. The Commission is therefore interested in receiving written submissions that address the aforementioned public interest factors in the context of this investigation.

If the Commission orders some form of remedy, the President has 60 days to approve or disapprove the Commission's action. During this period, the subject articles would be entitled to enter the United States under a bond, in an amount determined by the Commission and prescribed by the Secretary of the Treasury. The Commission is therefore interested in receiving submissions concerning the amount of the bond that should be imposed.

Written Submissions: The parties to the investigation, interested government agencies, and any other interested parties are encouraged to file written submissions on remedy, the public interest, and bonding. Complainant and the Commission investigative attorney are also requested to submit proposed remedial orders for the Commission's consideration. Written submissions including proposed remedial orders must be filed no later than close of business on May 16, 2003. Reply submissions must be filed no later than the close of business on May 23, 2003. No further submissions on these issues will be permitted unless otherwise ordered by the Commission.

Persons filing written submissions must file with the Office of the Secretary the original document and 14 true copies thereof on or before the deadlines stated above. Any person desiring to submit a document (or portion thereof) to the Commission in confidence must request confidential treatment unless the information has already been granted such treatment during the proceedings. All such requests should be directed to the Secretary of the Commission and must include a full statement of the reasons why the Commission should grant such treatment. *See* § 201.6 of the Commission's rules of practice and procedure, 19 CFR 201.6. Documents for which confidential treatment by the Commission is sought will be treated accordingly. All nonconfidential written submissions will be available for public inspection at the Office of the Secretary.

This action is taken under the authority of section 337 of the Tariff Act of 1930, 19 U.S.C. 1337, and §§ 210.16 and 210.42 of the Commission's rules of practice and procedure, 19 CFR 210.16 and 210.42.

By order of the Commission.
Issued: April 28, 2003.

Marilyn R. Abbott,
Secretary to the Commission.

[FR Doc. 03–10812 Filed 5–1–03; 8:45 am]

BILLING CODE 7020–02–P

DEPARTMENT OF LABOR

Office of the Secretary

Submission for OMB Review; Comment Request

April 23, 2003.

The Department of Labor (DOL) has submitted the following public information collection request (ICR) to the Office of Management and Budget (OMB) for review and approval in accordance with the Paperwork Reduction Act of 1995 (Pub. L. 104–13, 44 U.S.C. Chapter 35). A copy of this ICR, with applicable supporting documentation, may be obtained by calling the Department of Labor. To obtain documentation, contact Darrin King on (202) 693–4129 or E-Mail: *king.darrin@dol.gov.*

Comments should be sent to Office of Information and Regulatory Affairs, Attn: OMB Desk Officer for MSHA, Office of Management and Budget, Room 10235, Washington, DC 20503 (202) 395–7316), within 30 days from the date of this publication in the **Federal Register**.

The OMB is particularly interested in comments which:

- Evaluate whether the proposed collection of information is necessary for the proper performance of the functions of the agency, including whether the information will have practical utility;
- Evaluate the accuracy of the agency's estimate of the burden of the proposed collection of information, including the validity of the methodology and assumptions used;
- Enhance the quality, utility, and clarity of the information to be collected; and
- Minimize the burden of the collection of information on those who are to respond, including through the use of appropriate automated, electronic, mechanical, or other technological collection techniques or other forms of information technology, e.g., permitting electronic submission of responses.

Agency: Mine Safety and Health Administration (MSHA).

Title: Miner Operator Dust Cards.

Type of Review: Extension of a currently approved collection.

OMB Number: 1219–0011.

Frequency: On occasion; annually; and bi-monthly.

Type of Response: Recordkeeping; reporting; and third party disclosure.

Affected Public: Business or other for-profit.

Number of Respondents: 1,049.

Requirement	Annual responses	Frequency	Average response time (hours)	Annual burden hours
Mine Operator Duct Data Cards	39,000	Bi-monthly	see below	see below
Prepare and Approve Sampler Unit (28,000):		Bi-monthly	0.8333	23,332
Operational Checks/Monitoring (39,000):		Bi-monthly	0.17	6,630
Complete Data Card (39,000)		Bi-monthly	0.25	9,750
Sampling by Contractor	2,600	Bi-monthly	0	0
Reporting of Sampling Dates	400	On occasion	1	400
Dust Sampling Certification:				
Training and Exam	160	On occasion	8	1,280
Exam Only	40	On occasion	1.5	60
Status Change Reports	3,800	On occasion	0.42	1,596
Dust Control Plan (30 CFR 71.300):				
New Plans	24	On occasion	3	72
Revised Plans	5	On occasion	1.25	6
Copy and Mailing Plan	n/a	On occasion	0.17	5
Posting of Dust Control Plan	29	On occasion	0.25	7
Dust Control Plan (30 CFR 90.300):				

Requirement	Annual responses	Frequency	Average response time (hours)	Annual burden hours
New Plans	1	On occasion	3	3
Revised Plans	1	On occasion	1.25	1
Copy and Mailing Plan	n/a	On occasion	0.17	0.0
Providing Dust Control Plan to Part 90 Miners	2	On occasion	0.42	1
Total	46,062			43,144

Total Annualized capital/startup costs: $1,009,454.

Total annual costs (operating/maintaining systems or purchasing services): $1,714,547.

Description: 30 CFR, 70.201(c), 71.201(c), and 90.201(c), authorizes the District Manager to require the mine operator to submit the date on which sampling will begin. Only a certified person is allowed to conduct the respirable dust sampling required by these parts.

Sections 70.202(b), 71.202(b), and 90.202(b), requires that the person must pass the MSHA examination on sampling of respirable coal mine dust.

Sections 70.220(a), 71.220(a), requires the operator to report status changes to MSHA in writing within 3 working days after the status change has occurred.

Sections 70.209, 71.209, and 90.209, requires persons who are certified by MSHA to take respirable dust samples to complete the dust data card that accompanies each sample being submitted for analysis.

Sections 71.300 and 90.300 require a coal mine operator to submit to MSHA for approval a written respirable dust control plan with 15 calendar days after the termination data of a citation for violation of the applicable dust standard.

Section 71.301(d) requires the respirable dust control plan to be posted on the mine bulletin board however, 90.301(d) prohibits posting of the dust control plan for part-90 miners and, instead, requires a copy be provided to the affected part-90 miner.

Ira L. Mills,

Departmental Clearance Officer.

[FR Doc. 03–10863 Filed 5–1–03; 8:45 am]

BILLING CODE 4510–43–P

DEPARTMENT OF LABOR

Employment and Training Administration

[TA–W–42,336]

Power One, Boston, MA; Notice of Termination of Certification

This notice terminates that Certification Regarding Eligibility to Apply For Worker Adjustment Assistance issued by the Department on February 19, 2003, for all workers of Power One located in Boston, Massachusetts. The notice was published in the **Federal Register** on March 10, 2003 (68 FR 11410).

The Department, at the request of the State agency, reviewed the certification for workers for Power One in Boston, Massachusetts. Findings show that workers of the subject firm produced DC/DC power supplies.

The certification review revealed that workers of Power One are covered by an existing certification, TA–W–39,768, issued on October 31, 2001. While that certification noted that the Power One workers are located in Allston, Massachusetts, the Department has learned that Allston is used synonymously with Boston.

Since the workers of Power One, located in Boston, Massachusetts, also known as Allston, Massachusetts, are covered by an existing certification, the continuation of this certification would serve no purpose and the certification has been terminated.

Signed in Washington, DC this 13th day of March, 2003.

Richard Church,

Certifying Officer, Division of Trade Adjustment Assistance.

[FR Doc. 03–10861 Filed 5–1–03; 8:45 am]

BILLING CODE 4510–30–M

DEPARTMENT OF LABOR

Employment and Training Administration

Proposed Collection; Comment Request

ACTION: Notice.

SUMMARY: The Department of Labor, as part of its continuing effort to reduce paperwork and respondent burden conducts a preclearance consultation program to provide the general public and Federal agencies with an opportunity to comment on proposed and/or continuing collections of information in accordance with the Paperwork Reduction Act of 1995 (PRA95) [44 U.S.C. 3506(c)(2)(A)]. This program helps to ensure that requested data can be provided in the desired format, reporting burden (time and financial resources) is minimized, collection instruments are clearly understood, and the impact of collection requirements on respondents can be properly assessed. Currently, the Employment and Training Administration is soliciting comments concerning the proposed extension of the ETA 191, Statement of Expenditures and Financial Adjustments of Federal Funds for Unemployment Compensation for Federal Employees and Ex-Servicemembers. A copy of the proposed information collection request (ICR) can be obtained by contacting the office listed below in the addressee section of this notice.

DATES: Written comments must be submitted to the office listed in the addressee section below on or before July 1, 2003. The Department of Labor is particularly interested in comments which:

- Evaluate whether the proposed collection of information is necessary for the proper performance of the functions of the agency, including whether the information will have practical utility;
- Evaluate the accuracy of the agency's estimate of the burden of the proposed collection of information, including the validity of the methodology and assumptions used;

• Enhance the quality, utility, and clarity of the information to be collected; and

• Minimize the burden of the collection of information on those who are to respond, including through the use of appropriate automated, electronic, mechanical, or other technological collection techniques or other forms of information technology, *e.g.*, permitting electronic submissions of responses.

ADDRESSES: Sharon L. Jones, U.S. Department of Labor, Office of Workforce Security, Room S4231, 200 Constitution Ave, NW., Washington, DC, 20210; telephone number (202) 693–3006 (this is not a toll-free number); fax (202) 693–2874.

SUPPLEMENTARY INFORMATION:

I. Background

Public Law 97–362, Miscellaneous Revenue Act of 1982, amended the Unemployment Compensation for Ex-Servicemembers (UCX) law (5 U.S.C. 8509), and Public Law 96–499, Omnibus Reconciliation Act, amended the Unemployment Compensation for Federal Employees (UCFE) law (5 U.S.C. 8501, *et. seq.*) requiring each Federal employing agency to pay the costs of regular and extended UCFE/UCX benefits paid to its employees by the State Workforce Agencies (SWAs). The ETA 191 report submitted quarterly by each SWA shows the amount of benefits that should be charged to each Federal employing agency. The Office of Workforce Security uses this information to aggregate the SWA quarterly charges and submit one official bill to each Federal agency being charged. Federal agencies then reimburse the Federal Employees Compensation (FEC) Account maintained by the U.S. Treasury.

II. Current Actions

This collection continues to be needed to assure that the provisions of law are met regarding the requirement for each Federal agency to meet its obligations for paying for its unemployment compensation costs and to assure that SWAs are reimbursed properly for their expenditures of UCFE and UCX benefits on behalf of the Federal agencies.

Type of Review: Extension (without change).

Agency: Employment and Training Administration.

Title: ETA 191, Statement of Expenditures and Adjustments of Federal Funds for Unemployment Compensation for Federal Employees and Ex-Servicemembers (UCFE/UCX).

OMB Number: 1205–0162.

Agency Number: ETA 191.

Affected Public: State Governments.

Total Respondents: 53.

Frequency: Quarterly.

Total Responses: 212.

Average Time per Response: 1 hour.

Estimated Total Burden Hours: 212.

Total Burden Cost (operating/maintaining): $0.

Comments submitted in response to this comment request will be summarized and/or included in the request for Office of Management and Budget approval of the information collection request; they will also become a matter of public record.

Dated: April 28, 2003.

Cheryl Atkinson,

Administrator, Office of Workforce Security.

[FR Doc. 03–10862 Filed 5–1–03; 8:45 am]

BILLING CODE 4510–30–P

DEPARTMENT OF LABOR

Employment Standards Administration, Wage and Hour Division

Minimum Wages for Federal and Federally Assisted Construction; General Wage Determination Decisions

General wage determination decisions of the Secretary of Labor are issued in accordance with applicable law and are based on the information obtained by the Department of Labor from its study of local wage conditions and data made available from other sources. They specify the basic hourly wage rates fringe benefits which are determined to be prevailing for the described classes of laborers and mechanics employed on construction projects of a similar character and in the localities specified therein.

The determinations in these decisions of prevailing rates and fringe benefits have been made in accordance with 29 CFR part 1, by authority of the Secretary of Labor pursuant to the provisions of the Davis-Bacon Act of March 3, 1931, as amended (46 Stat. 1494, as amended, 40 U.S.C. 276a) and of other Federal statutes referred to in 29 CFR part 1, Appendix, as well as such additional statutes as may from time to time be enacted containing provisions for the payment of wages determined to be prevailing by the Secretary of Labor in accordance with the Davis-Bacon Act. The prevailing rates and fringe benefits determined in these decisions shall, in accordance with the provisions of the foregoing statutes, constitute the minimum wages payable on Federal and federally assisted construction projects to laborers and mechanics of the specified classes engaged on contract work of the character and in the localities described therein.

Good cause is hereby found not utilizing notice and public comment procedure thereon prior to the issuance of these determinations as prescribed in 5 U.S.C. 553 and not providing for delay in the effective date as prescribed in that section, because the necessity to issue current construction industry wage determinations frequently and in large volume causes procedures to be impractical and contrary to the public interest.

General wage determination decisions, and modifications and supersedes decisions thereto, contain no expiration dates and are effective from their date of notice in the **Federal Register**, or on the date written notice is received by the agency, whichever is earlier. These decisions are to be used in accordance with the provisions of 29 CFR parts 1 and 5. Accordingly, the applicable decision, together with any modifications issued, must be made a part of every contract for performance of the described work within the geographic area indicated as required by an applicable Federal prevailing wage law and 29 CFR part 5. The wage rates and fringe benefits, notice of which is published herein, and which are contained in the Government Printing Office (GPO) document entitled ''General Wage Determination Issued Under The Davis-Bacon And Related Acts,'' shall be the minimum paid by contractors and subcontractors to laborers and mechanics.

Any person, organization, or governmental agency having an interest in the rates determined as prevailing is encouraged to submit wage rate and fringe benefit information for consideration by the Department.

Further information and self-explanatory forms for the purpose of submitting this data may be obtained by writing to the U.S. Department of Labor, Employment Standards Administration, Wage and Hour Division, Division of Wage Determinations, 200 Constitution Avenue, NW., Room S–3014, Washington, DC 20210.

Modification to General Wage Determination Decisions

The number of the decisions listed to the Government Printing Office document entitled ''General Wage Determinations Issued Under the Davis-Bacon and related Acts'' being modified are listed by Volume and State. Dates of publication in the **Federal Register** are in parentheses following the decisions being modified.

Volume I

None

Volume II

None

Volume III

None

Volume IV

None

Volume V

None

Volume VI

None

Volume VII

None

General Wage Determination Publication

General wage determinations issued under the Davis-Bacon and related Acts, including those noted above, may be found in the Government Printing Office (GPO) document entitled ''General Wage determinations Issued Under the Davis-Bacon And Related Acts''. This publication is available at each of the 50 Regional Government Depository Libraries and many of the 1,400 Government Depository Libraries across the country.

General wage determinations issued under the Davis-Bacon and related Acts are available electronically at no cost on the Government Printing Office site at *www.access.gpo.gov/davisbacon.* They are also available electronically by subscription to the Davis-Bacon Online Service (*http://davisbacon.fedworld.gov*) of the National Technical Information Service (NTIS) of the U.S. Department of Commerce at 1–800–363–2068. This subscription offers value-added features such as electronic delivery of modified wage decisions directly to the user's desktop, the ability to access prior wage decisions issued during the year, extensive Help desk Support, etc.

Hard-copy subscriptions may be purchased from: Superintendent of Documents, U.S. Government Printing Office, Washington, DC 20402, (202) 512–1800.

When ordering hard-copy subscription(s), be sure to specify the State(s) of interest, since subscriptions may be ordered for any or all of the six separate Volumes, arranged by State. Subscriptions include an annual edition (issued in January or February) which includes all current general wage determinations for the States covered by each volume. Throughout the remainder of the year, regular weekly updates will be distributed to subscribers.

Signed at Washington, DC this 23rd Day of April 2003.

Terry Sullivan,

Acting Chief, Branch of Construction Wage Determinations.

[FR Doc. 03–10611 Filed 5–1–03; 8:45 am]

BILLING CODE 4510–27–M

DEPARTMENT OF LABOR

Mine Safety and Health Administration

Petitions for Modification

The following parties have filed petitions to modify the application of existing safety standards under section 101(c) of the Federal Mine Safety and Health Act of 1977.

1. Baylor Mining, Inc.

[Docket No. M–2003–027–C]

Baylor Mining, Inc., PO Box 577, Mabscott, West Virginia 25871 has filed a petition to modify the application of 30 CFR 75.364(a)(1) (Weekly examination) to its Beckley Crystal Mine (MSHA I.D. No. 46–08829) located in Raleigh County, West Virginia. Due to deteriorating roof conditions and several roof falls, it is unsafe to travel to the deepest point of penetration on a weekly examination. The petitioner proposes to check intake and return air courses on a weekly basis at the point designated on the attached map marked ''Dangered Off''. The petitioner states that the main intake airshaft is located approximately 800 feet from the deepest penetration of the marked section, 40,000 cfm of air passes around the faces to the return, and that its proposed alternative method would not result in a diminution of safety to the miners. The petitioner asserts that the proposed alternative method would provide at least the same measure of protection as the existing standard.

2. Blue Diamond Coal Company

[Docket No. M–2003–028–C]

Blue Diamond Coal Company, PO Box 47, Slemp, Kentucky 41763 has filed a petition to modify the application of 30 CFR 75.900 (Low- and medium-voltage circuits serving three-phase alternating current equipment; circuit breakers) to its Mine No. 74 (MSHA I.D. No. 15–18022), Mine No. 75 (I.D. No. 15–17478), and Mine No. 77 (I.D. No. 15–09636) all located in Perry County, Kentucky. The petitioner proposes to use contactors in lieu of under-voltage protection on the circuit breaker. The petitioner states that short circuit protection will continue to be provided by a circuit breaker with required interrupting retrips. The petitioner has listed in this petition specific terms and conditions that would be followed when its proposed alternative method is implemented. The petitioner asserts that the proposed alternative method would provide at least the same measure of protection as the existing standard.

Request for Comments

Persons interested in these petitions are encouraged to submit comments via e-mail to *comments@msha.gov,* or on a computer disk along with an original hard copy to the Office of Standards, Regulations, and Variances, Mine Safety and Health Administration, 1100 Wilson Boulevard, Room 2352, Arlington, Virginia 22209. All comments must be postmarked or received in that office on or before June 2, 2003. Copies of these petitions are available for inspection at that address.

Dated at Arlington, Virginia this 28th day of April 2003.

Marvin W. Nichols, Jr.,

Director, Office of Standards, Regulations, and Variances.

[FR Doc. 03–10823 Filed 5–1–03; 8:45 am]

BILLING CODE 4510–43–P

OFFICE OF MANAGEMENT AND BUDGET

Office of Federal Procurement Policy; Determination of Executive Compensation Benchmark Amount Pursuant to Section 808 of Public Law 105–85

AGENCY: Office of Federal Procurement Policy, OMB.

ACTION: Notice.

SUMMARY: The Office of Management and Budget (OMB) is hereby publishing the attached memorandum to the heads of executive departments and agencies concerning the determination of the maximum ''benchmark'' compensation that will be allowable under government contracts during contractors' FY 2003—$405,273. This determination is required to be made pursuant to Section 808 of Public Law 105–85. It applies equally to both defense and civilian procurement agencies.

FOR FURTHER INFORMATION CONTACT: Richard C. Loeb, Executive Secretary, Cost Accounting Standards Board,

Office of Federal Procurement Policy, on (202) 395–3254.

Angela B. Styles,

Administrator.

To the Heads of Executive Departments and Agencies

Subject: Determination of Executive Compensation Benchmark Amount Pursuant to Section 808 of Pub. L. 105–85.

This memorandum sets forth the ''benchmark compensation amount'' as required by section 39 of the Office of Federal Procurement Policy (OFPP) Act (41 U.S.C. 435), as amended. Under section 39, the ''benchmark compensation amount'' is ''the median amount of the compensation provided for all senior executives of all benchmark corporations for the most recent year for which data is available.'' The ''benchmark compensation amount'' established as directed by section 39 limits the allowability of compensation costs under government contracts. The ''benchmark compensation amount'' does not limit the compensation that an executive may otherwise receive.

Based on a review of commercially available surveys of executive compensation and after consultation with the Director of the Defense Contract Audit Agency, I have determined pursuant to the requirements of section 39 that the benchmark compensation amount for contractor fiscal year 2003 is $405,273. This benchmark compensation amount is to be used for contractor fiscal year 2003, and subsequent contractor fiscal years, unless and until revised by OMB. This benchmark compensation amount applies to contract costs incurred after January 1, 2003, under covered contracts of both the defense and civilian procurement agencies as specified in Section 808 of Public Law 105–85.

Questions concerning this memorandum may be addressed to Richard C. Loeb, Executive Secretary, Cost Accounting Standards Board, Office of Federal Procurement Policy, on (202) 395–3254.

Angela B. Styles,

Administrator.

[FR Doc. 03–10817 Filed 5–1–03; 8:45 am]

BILLING CODE 3110–01–P

NATIONAL FOUNDATION ON THE ARTS AND THE HUMANITIES

Sunshine Act Meeting of the National Museum Service Board

AGENCY: Institute of Museum and Library Services.

ACTION: Notice of meeting.

SUMMARY: This notice sets forth the agenda of a forthcoming meeting of the National Museum Services Board. This notice also describes the function of the board. Notice of this meeting is required under the Sunshine in Government Act and regulations of the Institute of Museum and Library Services, 45 CFR 1180.84.

TIME/DATE: 9 a.m.–12:30 p.m. on Saturday, May 17, 2003.

STATUS: Open.

ADDRESSES: Portland Art Museum, Board Room, 1219 S.W. Park Avenue (Hoffman Entrance), Portland, OR, (503) 226–2811.

FOR FURTHER INFORMATION CONTACT: Elizabeth Lyons, Special Assistant to the Director, Institute of Museum and Library Services, 1100 Pennsylvania Avenue, NW., Room 510, Washington, DC 20506, (202) 606–4649.

SUPPLEMENTARY INFORMATION: The National Museum Services Board is established under the Museum Services Act, Title II of the Arts, Humanities, and Cultural Affairs Act of 1976, Pub. L. 94–462. The board has responsibility for the general policies with respect to the powers, duties, and authorities vested in the Institute under the Museum Services Act.

The meeting on Saturday, May 17, 2003 will be open to the public. If you need special accommodations due to a disability, please contact: Institute of Museum and Library Services, 1100 Pennsylvania Avenue, NW., Washington, DC 20506—(202) 606–8536—TDD (202) 606–8636 at least seven (7) days prior to the meeting date.

Agenda

87th Meeting of the National Museum Services Board at Portland Art Museum, Board Room, 1219 SW. Park Avenue (Hoffman Entrance), Portland, OR

Saturday, May 17, 2003.

9 a.m.–12:30 p.m.

I. Chairperson's Welcome
II. Approval of Minutes from the 86th NMSB Meeting
III. Director's Welcome and Remarks
IV. Staff Updates
V. Museums and Technology: Where We Are
Presentations by:
Maxwell Anderson, Director and CEO, Whitney Museum of American Art
Rob Semper of Exploratorium
VI. Board Discussion
VII. Closing Remarks

Dated: April 29, 2003.

Teresa LaHaie,

Administrative Officer, National Foundation on the Arts and Humanities, Institute of Museum and Library Services.

[FR Doc. 03–11082 Filed 4–30–03; 3:54 pm]

BILLING CODE 7036–01–M

NUCLEAR REGULATORY COMMISSION

Agency Information Collection Activities: Proposed Collection; Comment Request

AGENCY: Nuclear Regulatory Commission (NRC).

ACTION: Notice of pending NRC action to submit an information collection request to OMB and solicitation of public comment.

SUMMARY: The NRC is preparing a submittal to OMB for review of continued approval of information collections under the provisions of the Paperwork Reduction Act of 1995 (44 U.S.C. chapter 35).

Information pertaining to the requirement to be submitted:

1. *The title of the information collection:* ''Nuclear Material Events Database (NMED)'' for the Collection of Event Report, Response, Analyses, and Follow-up Data on Events Involving the Use of Atomic Energy Act (AEA) Radioactive Byproduct Material.

2. *Current OMB approval number:* 3150–0178.

3. *How often the collection is required:* In accordance with compatible regulatory reporting requirements under formal Agreements, the Agreement States are requested to submit event reports to NRC within one month of notification from the State's licensee that an incident or event has occurred, including follow-up investigative report information. In addition, the Agreement States are requested to report events, that may pose a significant health and safety hazard, to the NRC Headquarters Operations Officer within the next working day of notification by an Agreement States licensee.

4. *Who is required or asked to report:* Current Agreement States and any State receiving Agreement State status in the future.

5. *The number of annual respondents:* 32 Agreement States.

6. *The number of hours needed annually to complete the requirement or*

request: 1,240 hours (an average of approximately 2.0 hours per each initial and follow-up report) for all existing Agreement States reporting.

7. *Abstract:* NRC regulations require NRC licensees to report incidents and events involving the use of radioactive byproduct, source and special nuclear material, such as those involving a radiation overexposure, leaking or contaminated sealed source(s), release of excessive contamination of radioactive material, lost or stolen radioactive material, equipment failures, and abandoned well logging sources. Medical events are required to be reported in accordance with 10 CFR 35.3045. Agreement State licensees are also required to report these events and medical events to their individual Agreement State regulatory authorities under compatible Agreement State regulations. NRC is requesting that the Agreement States provide information on the initial notification, response actions, and follow-up investigations on all events involving the use of nuclear materials regulated pursuant to the Atomic Energy Act. The event information should be provided in a uniform electronic format. The consolidation of both NRC and Agreement State incident and event information, involving the use of AEA radioactive materials, into one single national database provides the capability for assessment and trending analysis. A national database provides invaluable information for use in the identification of any facility/site specific or national generic safety concerns that could impact our ability to maintain public health and safety, and security. The identification and review of safety concerns may result in lessons learned, and may also identify generic issues for further study which could result in proposals for changes or revisions to technical or regulatory designs, processes, standards, guidance or requirements.

Submit, by July 1, 2003, comments that address the following questions:

1. Is the proposed collection of information necessary for the NRC to properly perform its functions? Does the information have practical utility?
2. Is the burden estimate accurate?
3. Is there a way to enhance the quality, utility, and clarity of the information to be collected?
4. How can the burden of the information collection be minimized, including the use of automated collection techniques or other forms of information technology?

A copy of the draft supporting statement may be viewed free of charge at the NRC Public Document Room, One White Flint North, 11555 Rockville Pike, Room O–1F21, Rockville, Maryland 20852. OMB clearance requests are available at the NRC worldwide Web site: *http://www.nrc.gov/public-involve/doc-comment/omb/index.html.* The document will be available on the NRC home page site for 60 days after the signature date of this notice.

Comments and questions about the information collection requirements may be directed to the NRC Clearance Officer, Brenda Jo Shelton, U.S. Nuclear Regulatory Commission, T–6 E6, Washington, DC 20555–0001, by telephone at 301–415–7233, or by Internet electronic mail to *infocollects@nrc.gov.*

Dated in Rockville, Maryland, this 28th day of April, 2003.

For the U.S. Nuclear Regulatory Commission.

Brenda Jo Shelton,

NRC Clearance Officer, Office of the Chief Information Officer.

[FR Doc. 03–10859 Filed 5–1–03; 8:45 am]

BILLING CODE 7590–01–P

OFFICE OF PERSONNEL MANAGEMENT

Proposed Collection; Comment Request for Review of a Revised Information Collection: RI 92–22

AGENCY: Office of Personnel Management.

ACTION: Notice.

SUMMARY: In accordance with the Paperwork Reduction Act of 1995 (Pub. L. 104–13, May 22, 1995), this notice announces that the Office of Personnel Management (OPM) intends to submit to the Office of Management and Budget (OMB) a request for review of a revised information collection. RI 92–22, Annuity Supplement Earnings Report, is used annually to obtain the amount of personal earnings from annuity supplement recipients to determine if there should be a reduction in benefits paid to the annuitant.

Comments are particularly invited on: Whether this information is necessary for the proper performance of functions of the Office of Personnel Management, and whether it will have practical utility; whether our estimate of the public burden of this collection of information is accurate, and based on valid assumptions and methodology; and ways in which we can minimize the burden of the collection of information on those who are to respond, through the use of appropriate technological collection techniques or other forms of information technology.

Approximately 180 RI 92–22 forms are completed annually. Each form requires approximately 15 minutes to complete. The annual estimated burden is 45 hours.

For copies of this proposal, contact Mary Beth Smith-Toomey on (202) 606–8358, FAX (202) 418–3251 or via E-mail to *mbtoomey@opm.gov.* Please include a mailing address with your request.

DATES: Comments on this proposal should be received within 60 calendar days from the date of this publication.

ADDRESSES: Send or deliver comments to—

Ronald W. Melton, Chief, Operations Support Group, Center for Retirement and Insurance Services, U.S. Office of Personnel Management, 1900 E Street, NW., Room 3349, Washington, DC 20415–3540.

FOR FURTHER INFORMATION CONTACT: Cyrus S. Benson, Team Leader, Publications Team, RIS Support Services, (202) 606–0623.

Office of Personnel Management.

Kay Coles James,

Director.

[FR Doc. 03–10865 Filed 5–1–03; 8:45 am]

BILLING CODE 6325–50–P

OFFICE OF PERSONNEL MANAGEMENT

Proposed Collection; Comment Request for Review of a Revised Information Collection: RI 30–2

AGENCY: Office of Personnel Management.

ACTION: Notice.

SUMMARY: In accordance with the Paperwork Reduction Act of 1995 (Pub. L. 104–13, May 22, 1995), this notice announces that the Office of Personnel Management (OPM) will submit to the Office of Management and Budget (OMB) a request for review of a revised information collection. RI 30–2, Annuitant's Report of Earned Income, is used annually to determine if disability retirees under age 60 have earned income which will result in the termination of their annuity benefits.

Comments are particularly invited on: Whether this collection of information is necessary for the proper performance of functions of the Office of Personnel Management, and whether it will have practical utility; whether our estimate of the public burden of this collection of information is accurate, and based on valid assumptions and methodology; and ways in which we can minimize the

burden of the collection of information on those who are to respond, through the use of appropriate technological collection techniques or other forms of information technology.

We estimate 21,000 RI 30–2 forms are completed annually. The RI 30–2 takes approximately 35 minutes to complete for an estimated annual burden of 12,250 hours.

For copies of this proposal, contact Mary Beth Smith-Toomey on (202) 606–2150, Fax (202) 418–3251 or via E-mail to *mbtoomey@opm.gov.* Please include a mailing address with your request.

DATES: Comments on this proposal should be received within 60 calendar days from the date of this publication.

ADDRESSES: Send or deliver comments to—William C. Jackson, Chief, Retirement Eligibility & Services Group, Retirement Services, U.S. Office of Personnel Management, 1900 E Street, NW., Room 2336, Washington, DC 20415.

FOR FURTHER INFORMATION CONTACT: Cyrus S. Benson, Team Leader, Publications Team, RIS Support Group, (202) 606–0623.

Office of Personnel Management.

Kay Coles James,

Director.

[FR Doc. 03–10867 Filed 5–1–03; 8:45 am]

BILLING CODE 6325–50–P

OFFICE OF PERSONNEL MANAGEMENT

Proposed Collection; Comment Request for Review of a Revised Information Collection: RI 38–128

AGENCY: Office of Personnel Management.

ACTION: Notice.

SUMMARY: In accordance with the Paperwork Reduction Act of 1995 (Pub. L. 104–13, May 22, 1995), this notice announces that the Office of Personnel Management (OPM) intends to submit to the Office of Management and Budget (OMB) a request for review of a revised information collection. RI 38–128, It's Time to Sign Up for Direct Deposit, is used to give recent retirees the opportunity to waive Direct Deposit of their payment from OPM. The form is sent to the annuitant by OPM only if the separating agency did not give the retiring employee this election opportunity.

Comments are particularly invited on: Whether this collection of information is necessary for the proper performance of functions of the Office of Personnel Management, and whether it will have practical utility; whether our estimate of the public burden of this collection of information is accurate, and based on valid assumptions and methodology; and ways in which we can minimize the burden of the collection of information on those who are to respond, through the use of appropriate technological collection techniques or other forms of information technology.

Approximately 45,500 forms are completed annually. The form takes approximately 30 minutes to complete. The annual estimated burden is 22,750 hours.

For copies of this proposal, contact Mary Beth Smith-Toomey on (202) 606–8358, FAX (202) 418–3251 or via E-mail to *mbtoomey@opm.gov.* Please include a mailing address with your request.

DATES: Comments on this proposal should be received within 60 calendar days from the date of this publication.

ADDRESSES: Send or deliver comments to—Ronald W. Melton, Chief, Operations Support Group, Retirement Services, U.S. Office of Personnel Management, 1900 E Street, NW., Room 3349, Washington, DC 20415–3540.

FOR FURTHER INFORMATION CONTACT: Cyrus S. Benson, Team Leader, Publications Team, RIS Support Services, (202) 606–0623.

Office of Personnel Management.

Kay Coles James,

Director.

[FR Doc. 03–10868 Filed 5–1–03; 8:45 am]

BILLING CODE 6325–50–P

OFFICE OF PERSONNEL MANAGEMENT

Submission for OMB Review; Comment Request for Review of a Revised Information Collection: RI 25–15

AGENCY: Office of Personnel Management.

ACTION: Notice.

SUMMARY: In accordance with the Paperwork Reduction Act of 1995 (Pub. L. 104–13, May 22, 1995 and 5 CFR 1320), this notice announces that the Office of Personnel Management (OPM) has submitted to the Office of Management and Budget (OMB) a request for review of a revised information collection. RI 25–15, Notice of Change in Student's Status, is used to collect sufficient information from adult children of deceased Federal employees or annuitants to assure that the child continues to be eligible for payments from OPM.

Approximately 2,500 certifications are processed annually. Each form takes approximately 20 minutes to complete. The annual estimated burden is 835 hours.

For copies of this proposal, contact Mary Beth Smith-Toomey on (202) 606–8358, Fax (202) 418–3251 or E-mail to *mbtoomey@opm.gov.* Please include your mailing address with your request.

DATES: Comments on this proposal should be received within 30 calendar days from the date of this publication.

ADDRESSES: Send or deliver comments to—

Ronald W. Melton, Chief, Operations Support Group, Center for Retirement and Insurance Services, U.S. Office of Personnel Management, 1900 E Street, NW., Room 3349, Washington, DC 20415–3540;

and

Stuart Shapiro, OPM Desk Officer, Office of Information & Regulatory Affairs, Office of Management and Budget, New Executive Office Building, NW., Room 10235, Washington, DC 20503.

FOR FURTHER INFORMATION CONTACT: Cyrus S. Benson, Team Leader, Publications Team, Administrative Services Branch, (202) 606–0623.

Office of Personnel Management.

Kay Coles James,

Director.

[FR Doc. 03–10869 Filed 5–1–03; 8:45 am]

BILLING CODE 6325–50–P

OFFICE OF PERSONNEL MANAGEMENT

Excepted Service

AGENCY: Office of Personnel Management.

ACTION: Notice.

SUMMARY: This gives notice of OPM decisions, granting authority to make appointments under Schedule A and Schedule C in the excepted service as required by 5 CFR 6.1 and 213.103.

FOR FURTHER INFORMATION CONTACT: Deborah Grade, Acting Director, Division for Human Resources Products and Services, Center for Talent Services, Washington Services Branch (202) 606–5027.

SUPPLEMENTARY INFORMATION: Appearing in the listing below are 1 Schedule A authority and the individual authorities established under Schedule C between March 1, 2003, and March 31, 2003. Future notices will be published on the fourth Tuesday of each month, or as soon as possible thereafter. A consolidated listing of all authorities as of June 30 is published each year.

Schedule A

Department of Homeland Security

Up to 50 positions at the GS–5 through 15 grade levels at the Department of Homeland Security. No new appointments may be made under this authority after March 30, 2004.

Schedule B

No Schedule B's during March 2003.

Schedule C

The following Schedule C authorities were approved during March 2003:

Department of Agriculture

Deputy Executive Director to the Executive Director, Center for Nutrition Policy and Promotion. Effective March 10, 2003.

Special Assistant to the Under Secretary for Natural Resources and Environment. Effective March 25, 2003.

Confidential Assistant to the Under Secretary for Marketing and Regulatory Programs. Effective March 27, 2003.

Department of the Army (DOD)

Special Assistant to the Assistant Secretary for Financial Management and Comptroller. Effective March 6, 2003.

Assistant for Water Resources to the Deputy Assistant Secretary of the Army (Legislation). Effective March 10, 2003.

Department of Commerce

Confidential Assistant to the Deputy Assistant Secretary for Export Promotion Service. Effective March 7, 2003.

Director for Speechwriting to the Director of Public Affairs. Effective March 13, 2003.

Deputy Director to the Director, Office of Public Affairs. Effective March 13, 2003.

Senior Advisor to the Under Secretary for International Trade. Effective March 13, 2003.

Congressional Affairs Specialist to the Director of Legislative Affairs. Effective March 18, 2003.

Director, Intergovernmental Affairs to the Deputy Assistant Secretary for Programs Research and Evaluation. Effective March 19, 2003.

Department of Defense

Senior Associate Director, Office of Global Communications to the Deputy Under Secretary of Defense (Installations and Environment). Effective March 4, 2003.

Staff Assistant to the Assistant Secretary of Defense (International Security Policy). Effective March 6, 2003.

Defense Fellow to the Special Assistant to the Secretary of Defense for White House Liaison. Effective March 7, 2003.

Staff Assistant and Regional Director for the Levant to the Deputy Under Secretary of Defense (Special Plans and Near East/South Asia). Effective March 11, 2003.

Special Assistant to the Assistant Secretary of Defense for Public Affairs. Effective March 12, 2003.

Personal and Confidential Assistant to the Principal Deputy Under Secretary of Defense for Policy. Effective March 12, 2003.

Public Affairs Specialist to the Deputy Assistant Secretary of Defense for Public Affairs (Communications). Effective March 18, 2003.

Department of Education

Deputy Secretary's Regional Representative—Region III to the Deputy Assistant Secretary for Regional Services. Effective March 3, 2003.

Special Assistant to the Under Secretary. Effective March 3, 2003.

Confidential Assistant to the Deputy Assistant Secretary. Effective March 6, 2003.

Special Assistant to the Special Assistant to the Secretary. Effective March 7, 2003.

Special Assistant to the Special Assistant to the Secretary. Effective March 7, 2003.

Confidential Assistant to the Director, White House Liaison. Effective March 10, 2003.

Executive Assistant to the General Counsel. Effective March 10, 2003.

Associate Deputy Under Secretary for Improvement and Reform to the Deputy Under Secretary for Innovation and Improvement. Effective March 10, 2003.

Special Assistant to the Chief of Staff. Effective March 20, 2003.

Special Assistant to the Associate Deputy Under Secretary. Effective March 21, 2003.

Special Assistant to the Assistant Secretary for Civil Rights. Effective March 25, 2003.

Special Assistant to the Assistant Secretary for Post Secondary Education. Effective March 27, 2003.

Department of Energy

Special Assistant to the Assistant Secretary (Consumerable and Renewable Energy). Effective March 4, 2003.

Senior Policy Advisor to the Secretary for the Department of Energy. Effective March 6, 2003.

Director, Office of Energy Reliability to the Director, Office of Energy Assurance. Effective March 6, 2003.

Communications Advisor to the Assistant Secretary of Energy (Environmental Management). Effective March 6, 2003.

Deputy White House Liaison to the Deputy Chief of Staff. Effective March 17, 2003.

Special Assistant to the Assistant Secretary (Conservation and Renewal Energy). Effective March 31, 2003.

Department of Health and Human Services

Special Assistant to the Executive Secretary. Effective March 3, 2003.

Special Assistant to the White House Liaison for Political Personnel, Boards and Commissioners. Effective March 19, 2003.

Special Assistant to the Chief of Staff. Effective March 27, 2003.

Department of Homeland Security Agency

Staff Assistant to the Special Assistant to the Secretary, Private Sector. Effective March 3, 2003.

Scheduler to the Secretary of the Department of Homeland Security. Effective March 10, 2003.

Research Assistant to the Assistant Secretary for Public Affairs. Effective March 17, 2003.

Policy Analyst to the Under Secretary for Border and Transportation Security. Effective March 18, 2003.

Personal Assistant to the Secretary. Effective March 19, 2003.

Executive Assistant to the Under Secretary for Science and Technology. Effective March 19, 2003.

Special Assistant to the Assistant Secretary for Infrastructure Protection. Effective March 21, 2003.

Director of Speechwriting to the Assistant Secretary for Public Affairs. Effective March 24, 2003.

Information Technology Specialist (INET) to the Assistant Secretary for Public Affairs. Effective March 26, 2003.

Staff Assistant to the Director, State and Local Coordination. Effective March 28, 2003.

Staff Assistant to the Under Secretary for Science and Technology. Effective March 31, 2003.

Department of Housing and Urban Development

Deputy Director for Advance to the Director of Executive Scheduling and Operations. Effective March 12, 2003.

Deputy Director for Scheduling to the Director for Executive Scheduling and Operations. Effective March 14, 2003.

Staff Assistant to the Assistant Deputy Secretary for Field Policy and Management. Effective March 14, 2003.

Special Assistant to the Assistant Secretary for Public and Indian Housing. Effective March 14, 2003.

Staff Assistant to the Assistant Secretary for Community Planning and Development. Effective March 14, 2003.

Director of Executive Scheduling and Operations to the Assistant Secretary for Administration. Effective March 18, 2003.

Staff Assistant to the Director of Executive Scheduling and Operations. Effective March 20, 2003.

Special Assistant to the Assistant Secretary for Congressional/Intergovernmental Relations. Effective March 27, 2003.

Department of the Interior

Special Assistant to the White House Liaison. Effective March 17, 2003.

Department of Justice

Special Assistant to the Assistant Attorney General, Criminal Division. Effective March 6, 2003.

Special Assistant to the Assistant Attorney General, (Legal Policy). Effective March 11, 2003.

Special Assistant to the Director for Public Affairs. Effective March 20, 2003.

Special Assistant to the Director for Intergovernmental and Public Liaison. Effective March 21, 2003.

Department of Labor

Secretary's Representative to the Associate Secretary for Congressional and Intergovernmental Affairs. Effective March 19, 2003.

Staff Assistant to the Assistant Secretary for Public Affairs. Effective March 28, 2003.

Department of State

Special Assistant to the Deputy Secretary. Effective March 18, 2003.

Special Assistant to the Assistant Secretary for Education and Cultural Affairs. Effective March 21, 2003.

Member, Policy Planning Staff to the Director, Policy Planning Staff. Effective March 21, 2003.

Director, Office of Public Liaison to the Assistant Secretary, Bureau of Public Affairs. Effective March 21, 2003.

Foreign Affairs Officer to the Assistant Secretary, Democracy Rights and Human Labor. Effective March 21, 2003.

Legislative Management Officer to the Assistant Secretary for Legislative and Intergovernmental Affairs. Effective March 31, 2003.

Department of Transportation

Deputy Assistant Secretary to the Assistant Secretary for Governmental Affairs. Effective March 7, 2003.

Department of the Treasury

Executive Assistant to the Secretary. Effective March 6, 2003.

Special Assistant to the Assistant Secretary for Management and Chief Financial Officer. Effective March 6, 2003.

Public Affairs Specialist to the Director, Public Affairs. Effective March 31, 2003.

Environmental Protection Agency

Assistant Associate Administrator/Press Secretary to the Associate Administrator for Public Affairs. Effective March 21, 2003.

Public Affairs Specialist to the Associate Administrator for Public Affairs. Effective March 28, 2003.

Program Advisor to the Associate Administrator for Public Affairs. Effective March 28, 2003.

General Services Administration

Congressional Relations Analyst to the Associate Administrator for Congressional and Intergovernmental Affairs. Effective March 5, 2003.

Senior Advisor to the Regional Administrator, Region 3, Philadelphia, Pennsylvania. Effective March 13, 2003.

National Aeronautics and Space Administration

Special Assistant to the Inspector General. Effective March 26, 2003.

Public Affairs Specialist to the Assistant Associate Administrator for Public Affairs. Effective March 26, 2003.

Special Assistant to the Assistant Administrator for Legislative Affairs. Effective March 27, 2003.

National Endowment for the Arts

Director of Communications to the Chairman, National Endowment for the Arts. Effective March 6, 2003.

National Transportation Safety Board

Counselor to the Chairman, National Transportation Safety Board. Effective March 26, 2003.

Office of Management and Budget

Deputy to the Associate Director for Legislative Affairs (House) to the Associate Director for Legislative Affairs. Effective March 7, 2003.

Deputy to the Associate Director to the Associate Director for Legislative Affairs (Senate). Effective March 10, 2003.

Confidential Assistant to the Associate Director for Legislative Affairs. Effective March 24, 2003.

Office of National Drug Control Policy

Project Coordinator to the Chief of Staff. Effective March 5, 2003.

Overseas Private Investment Corporation

Executive Assistant to the President. Effective March 19, 2003.

Office of Personnel Management

Confidential Assistant/Scheduler to the Chief of Staff. Effective March 6, 2003.

Small Business Administration

Senior Advisor to the Associate Deputy Administrator for Entrepreneurial Development. Effective March 25, 2003.

U.S. International Trade Commission

Staff Assistant to a Commissioner. Effective March 13, 2003.

Authority: 5 U.S.C. 3301 and 3302; E.O. 10577, 3 CFR 1954–1958 Comp., P.218

Office of Personnel Management.

Kay Coles James,

Director.

[FR Doc. 03–10866 Filed 5–1–03; 8:45 am]

BILLING CODE 6325–38–P

SECURITIES AND EXCHANGE COMMISSION

Requests Under Review by Office of Management and Budget

Upon written request, copies available from: Securities and Exchange Commission, Office of Filings and Information Services, Washington, DC 20549.

Extension:

Rule 15c2–1; SEC File No. 270–418; OMB Control No. 3235–0485.

Notice is hereby given that pursuant to the Paperwork Reduction Act of 1995 (44 U.S.C. 3501 *et seq.*), the Securities and Exchange Commission (''Commission'') has submitted to the Office of Management and Budget request for extension of the previously approved collection of information discussed below.

Rule 15c2–1 (17 CFR 240.15c2–1) prohibits the commingling under the same lien of securities of margin customers (a) with other customers without their written consent and (b) with the broker or dealer. The rule also prohibits the rehypothecation of customers' margin securities for a sum in excess of the customer's aggregate indebtedness. *See* Securities Exchange Act Release No. 2690 (November 15, 1940); Securities Exchange Act Release No. 9428 (December 29, 1971). Pursuant to rule 15c2–1, respondents must collect information necessary to prevent the rehypothecation of customer account in contravention of the rule, issue and

retain copies of notices of hypothecation of customer accounts in accordance with the rule, and collect written consents from customers in accordance with the rule. The information is necessary to ensure compliance with the rule, and to advise customers of the rule's protections.

There are approximately 177 respondents per year (*i.e.*, broker-dealers that carry or clear customer accounts that also have bank loans) that require an aggregate total of 3,983 hours to comply with the rule. Each of these approximately 177 registered broker-dealers makes an estimated 45 annual responses, for an aggregate total of 7,965 responses per year. Each response takes approximately 0.5 hours to complete. Thus, the total compliance burden per year is 3,983 burden hours.

An agency may not conduct or sponsor, and a person is not required to respond to, a collection of information unless it displays a currently valid control number.

Written comments regarding the above information should be directed to the following persons: (a) Desk Officer for the Securities and Exchange Commission, Office of Information and Regulatory Affairs, Office of Management and Budget, Room 10102, New Executive Office Building, Washington DC 20503; and (b) Kenneth A. Fogash, Acting Associate Executive Director/CIO, Office of Information Technology, Securities and Exchange Commission, 450 Fifth Street, NW, Washington DC 20549. Comments must be submitted to OMB within 30 days of this notice.

Dated: April 28, 2003.

Margaret H. McFarland,

Deputy Secretary.

[FR Doc. 03–10820 Filed 5–1–03; 8:45 am]

BILLING CODE 8010–01–P

SECURITIES AND EXCHANGE COMMISSION

[Release No. 34–47748; File No. SR–Amex–2002–108]

Self-Regulatory Organizations; Order Granting Approval to Proposed Rule Change by the American Stock Exchange LLC To Amend Amex Rule 152 To Provide That a Member That Fails To Execute an Order May Be Compelled To Take or Supply the Securities Named in the Order

April 25, 2003.

On December 18, 2002, the American Stock Exchange LLC (''Amex'') filed with the Securities and Exchange Commission (''Commission''), pursuant to section 19(b)(1) of the Securities Exchange Act of 1934 (''Act'') [1] and rule 19b–4 thereunder,[2] a proposed rule change to amend Amex rule 152 to provide that a member that fails to execute an order may be compelled to take or supply the securities named in the order. The proposed rule change was published for comment in the **Federal Register** on March 20, 2003.[3] The Commission received no comments on the proposal.

After careful review, the Commission finds that the proposed rule change is consistent with the requirements of the Act and the rules and regulations thereunder applicable to a national securities exchange.[4] Specifically, the Commission finds that the proposal is consistent with section 6(b)(5) of the Act,[5] which requires, among other things, that the Amex's rules be designed to prevent fraudulent and manipulative acts and practices, to promote just and equitable principles of trade, to foster cooperation and coordination with persons engaged in regulating, clearing, settling, processing information with respect to, and facilitating transactions in securities, to remove impediments to and perfect the mechanism of a free and open market and a national market system, and, in general, to protect investors and the public interest.

The Commission believes that the Amex's proposal to explicitly provide that a member that has failed to execute an order may be compelled to take or supply the securities in the order should highlight the significant obligations of members in the handling of any order entrusted to them and their responsibility to correct transactions on behalf of their customers in cases of error.[6] Furthermore, the Amex has noted that the consent provisions outlined in Amex rule 152(a) would continue to apply to the error transactions conducted under Amex rule 152(a)(1). Consequently, the Commission believes that the Amex's proposal would continue to reflect that, unless otherwise agreed, an agent is subject to a duty not to deal with his principal as an adverse party in a transaction connected with his agency without the principal's knowledge.

It is therefore ordered, pursuant to section 19(b)(2) of the Act,[7] that the proposed rule change (File No. SR–Amex–2002–108) be, and it hereby is, approved.

For the Commission, by the Division of Market Regulation, pursuant to delegated authority.[8]

Margaret H. McFarland,

Deputy Secretary.

[FR Doc. 03–10821 Filed 5–1–03; 8:45 am]

BILLING CODE 8010–01–P

[1] 15 U.S.C. 78s(b)(1).

[2] 17 CFR 240.19b–4.

[3] *See* Securities Exchange Act Release No. 47493 (March 13, 2003), 68 FR 13743.

[4] In approving this proposal, the Commission has considered the proposed rule's impact on efficiency, competition, and capital formation. 15 U.S.C. 78c(f).

[5] 15 U.S.C. 78f(b)(5).

[6] The Commission also notes that the proposed Amex rule is identical to the New York Stock Exchange, Inc.'s rule. *See* NYSE rule 91(a).

[7] 15 U.S.C. 78s(b)(2).

[8] 17 CFR 200.30–3(a)(12).

SECURITIES AND EXCHANGE COMMISSION

[Release No. 34–47749; File No. SR–ISE–2003–05]

Self-Regulatory Organizations; Notice of Filing of Proposed Rule Change, and Amendment No. 1 Thereto, by International Securities Exchange, Inc., Relating to Rules for Trading Options on Indices

April 25, 2003.

Pursuant to section 19(b)(1) of the Securities Exchange Act of 1934 (''Act''),[1] and Rule 19b–4 thereunder,[2] notice is hereby given that on February 24, 2003, the International Securities Exchange (''ISE'' or ''Exchange'') filed with the Securities and Exchange Commission (''Commission'') the proposed rule change as described in Items I, II, and III below, which Items have been prepared by the ISE. The ISE filed Amendment No. 1 to the proposal on April 17, 2003.[3] The Commission is publishing this notice to solicit comments on the proposed rule change, as amended, from interested persons.

I. Self-Regulatory Organization's Statement of the Terms of Substance of the Proposed Rule Change

The ISE is proposing to adopt rules relating to trading options on indices.

The text of the proposed rule change appears below.[4] Additions are *italicized;* deletions are in [brackets].

[1] 15 U.S.C. 78s(b)(1).

[2] 17 CFR 240.19b–4.

[3] *See* letter from Katherine Simmons, Vice President and Associate General Counsel, ISE to Florence Harmon, Senior Special Counsel, Division of Market Regulation (''Division''), Commission, dated April 16, 2003. In Amendment No. 1, the ISE submitted a new Form 19b–4, which replaced the original filing in its entirety.

[4] The Commission notes that it made minor typographical corrections to the rule text submitted in the proposed rule change. Telephone conversation between Katherine Simmons, Vice

Continued

Rule 413. Exemptions From Position Limits

* * * * *

(b) Market Maker Exemption. The provisions set forth below apply only to market makers seeking an exemption to the standard position limits in all options traded on the Exchange for the purpose of assuring that there is sufficient depth and liquidity in the marketplace, and not to confer a right upon the market maker applying for an exemption.

* * * * *

(3) Generally, an exemption will be granted only to a market maker who has requested an exemption, who is appointed to the options class in which the exemption is requested pursuant to Rule 802, whose positions are near the current position limit and who is significant in terms of daily volume. The positions must generally be within ten percent (10%) of the limits contained in Rule 412 *for equity options and twenty percent (20%) of those limits for broad-based index options.*

* * * * *

Rule 418. Other Restrictions on Options Transactions and Exercises

(a) The Exchange may impose such restrictions on transactions or exercises in one or more series of options of any class traded on the Exchange as the Exchange in its judgment deems advisable in the interests of maintaining a fair and orderly market in options contracts or in underlying securities, or otherwise deems advisable in the public interest or for the protection of investors.

(1) During the effectiveness of such restrictions, no Member shall, for any account in which it has an interest or for the account of any customer, engage in any transaction or exercise in contravention of such restrictions.

(2) Notwithstanding the foregoing, during the ten (10) business days prior to the expiration date of a given series of options, *other than index options,* no restriction on exercise under this Rule may be in effect with respect to that series of options. *With respect to index options, restrictions on exercise may be in effect until the opening of business on the last business day before the expiration date.*

(3) Exercises of American-style, cash-settled index options shall be prohibited during any time when trading in such options is delayed, halted, or suspended, subject to the following exceptions:

(i) The exercise of an American-style, cash-settled index option may be processed and given effect in accordance with and subject to the Rules of the Clearing Corporation while trading in the option is delayed, halted, or suspended if it can be documented, in a form prescribed by the Exchange, that the decision to exercise the option was made during allowable time frames prior to the delay, halt, or suspension;

(ii) Exercises of expiring American-style, cash-settled index options shall not be prohibited on the last business day prior to their expiration;

(iii) Exercises of American-style, cash-settled index options shall not be prohibited during a trading halt that occurs at or after 4:00 p.m. Eastern time. In the event of such a trading halt, exercises may occur through 4:20 p.m. Eastern time. In addition, if trading resumes following such a trading halt (such as by closing rotation), exercises may occur during the resumption of trading and for five (5) minutes after the close of the resumption of trading. The provisions of this subparagraph (a)(3)(iii) are subject to the authority of the Board to impose restrictions on transactions and exercises pursuant to paragraph (a) of this Rule; and

(iv) An Exchange officer designated by the Board may determine to permit the exercise of American-style, cash-settled index options while trading in such options is delayed, halted, or suspended.

* * * * *

Rule 701. Trading Rotations

* * * * *

(c) Rotations After Trading Hours. Normally, the close of trading for options classes shall occur two (2) minutes after the primary market on which the underlying stock trades closes for trading. However, as provided below transactions may be effected in a class of options after the end of normal trading hours in connection with a trading rotation.

(1) A trading rotation may be employed whenever the Exchange concludes that such action is appropriate in the interests of a fair and orderly market. The factors that may be considered include, but are not limited to, whether there has been a recent opening or reopening of trading in the underlying security, a declaration of a ''fast market'' pursuant to Rule 704, or a need for a rotation in connection with expiring individual stock *or index options,* an end of the year rotation, or the restart of a rotation which is already in progress.

* * * * *

Rule 705. Limitation of Liability

(a) The Exchange, its Directors, officers, committee members, employees, contractors or agents shall not be liable to Members nor any persons associated with Members for any loss, expense, damages or claims arising out of the use of the facilities, systems or equipment afforded by the Exchange, nor any interruption in or failure or unavailability of any such facilities, systems or equipment, whether or not such loss, expense, damages or claims result or are alleged to result from negligence or other unintentional errors or omissions on the part of the Exchange, its Directors, officers, committee members, employees, contractors, agents or other persons acting on its behalf, or from systems failure, or from any other cause within or outside the control of the Exchange. *Without limiting the generality of the foregoing, the Exchange shall have no liability to any person for any loss, expense, damages or claims that result from any error, omission or delay in calculating or disseminating any current or closing index value or any reports of transactions in or quotations for options or other securities, including underlying securities.*

* * * * *

Rule 803. Obligations of Market Makers

(a) General. Transactions of a market maker should constitute a course of dealings reasonably calculated to contribute to the maintenance of a fair and orderly market, and market makers should not make bids or offers or enter into transactions that are inconsistent with such a course of dealings. Ordinarily, market makers are expected to:

(1) Except in unusual market conditions, refrain from purchasing a call option or a put option at a price more than $0.25 below parity. In the case of calls, parity is measured by the bid in the underlying security, and in the case of puts, parity is measured by the offer in the underlying security.

(2) Not bid more than $1 lower or offer more than $1 higher than the last preceding transaction price for the particular options contract, plus or minus the aggregate change in the last sale price of the underlying security since the time of the last preceding transaction for the particular options contract. This provision applies from one day's close to the next day's opening and from one transaction to the next in intra-day transactions. With respect to inter-day transaction this provision applies if the closing

---

President and Associate General Counsel, ISE and Tim Fox, Attorney, Division of Market Regulation (''Division''), Commission on April 17, 2003.

transaction occurred within one hour of the close and the opening transaction occurred within one hour after the opening. With respect to intra-day transactions, this provision applies to transactions occurring within one hour of one another.

An Exchange Official designated by the Board may waive the provisions of subparagraphs (1) and (2) in an index option when the primary underlying securities market for that index is not trading.

(b) Appointment. With respect to each options class to which a market maker is appointed under Rule 802, the market maker has a continuous obligation to engage, to a reasonable degree under the existing circumstances, in dealings for his own account when there exists, or it is reasonably anticipated that there will exist, a lack of price continuity, a temporary disparity between the supply of and demand for a particular options contract, or a temporary distortion of the price relationships between options contracts of the same class. Without limiting the foregoing, a market maker is expected to perform the following activities in the course of maintaining a fair and orderly market:

* * * * *

(4) To price options contracts fairly by, among other things, bidding and offering so as to create differences of no more than $.25 between the bid and offer for each options contract for which the bid is less than $2, no more than $.40 where the bid is at least $2 but does not exceed $5, no more than $.50 where the bid is more than $5 but does not exceed $10, no more than $.80 where the bid is more than $10 but does not exceed $20, and no more than $1 where the bid is $20 or greater, provided that the Exchange may establish differences other than the above for one or more options series.

(i) The bid/offer differentials stated *in subparagraph (b)(4) of this Rule* [above] shall not apply to in-the-money options series where the underlying securities market is wider than the differentials set forth above. For these series, the bid/ask differential may be as wide as the quotation on the primary market of the underlying security.

(ii) The Exchange or its authorized agent may calculate bids and asks for various indices for the sole purpose of determining permissible bid/ask differentials on options on these indices. These values will be calculated by determining the weighted average of the bids and asks for the components of the corresponding index. These bids and asks will be disseminated by the Exchange at least every fifteen (15) seconds during the trading day solely for the purpose of determining the permissible bid/ask differential that market-makers may quote on an in-the-money option on the indices. For in-the-money series in index options where the calculated bid/ask differential is wider than the applicable differential set out in subparagraph (b)(4) of this Rule, the bid/ask differential in the index options series may be as wide as the calculated bid/ask differential in the underlying index. The Exchange will not make a market in the basket of stock comprising the indices and is not guaranteeing the accuracy or the availability of the bid/ask values.

Rule 1100. Exercise of Options Contracts

* * * * *

(h) Clearing Members must follow the procedures of the Clearing Corporation when exercising American-style cash-settled index options contracts issued or to be issued in any account at the Clearing Corporation. Members must also follow the procedures set forth below with respect to American-style cash-settled index options:

(1) For all contracts exercised by the Member or by any customer of the Member, an ''exercise advice'' must be delivered by the Member in such form or manner prescribed by the Exchange no later than 4:20 p.m. Eastern time, or if trading hours are extended or modified in the applicable options class, no later than five (5) minutes after the close of trading on that day.

(2) Subsequent to the delivery of an ''exercise,'' should the Member or a customer of the Member determine not to exercise all or part of the advised contracts, the Member must also deliver an ''advice cancel'' in such form or manner prescribed by the Exchange no later than 4:20 p.m. Eastern time, or if trading hours are extended or modified in the applicable options class, no later than five (5) minutes after the close of trading on that day.

(3) An Exchange official designated by the Board may determine to extend the applicable deadline for the delivery of ''exercise advice'' and ''advice cancel'' notifications pursuant to this paragraph (h) if unusual circumstances are present.

(4) No Member may prepare, time stamp or submit an ''exercise advice'' prior to the purchase of the contracts to be exercised if the Member knew or had reason to know that the contracts had not yet been purchased.

(5) The failure of any Member to follow the procedures in this paragraph (h) may result in the assessment of a fine, which may include but is not limited to disgorgement of potential economic gain obtained or loss avoided by the subject exercise, as determined by the Exchange.

(6) Preparing or submitting an ''exercise advice'' or ''advice cancel'' after the applicable deadline on the basis of material information released after such deadline, in addition to constituting a violation of this Rule, is activity inconsistent with just and equitable principles of trade.

(7) The procedures set forth in subparagraphs (1)-(2) of this subparagraph (h) do not apply (i) on the business day prior to expiration in series expiring on a day other than a business day or (ii) on the expiration day in series expiring on a business day.

(8) Exercises of American-style, cash-settled index options (and the submission of corresponding ''exercise advice'' and ''advice cancel'' forms) shall be prohibited during any time when trading in such options is delayed, halted, or suspended, subject to the following exceptions:

(i) The exercise of an American-style, cash-settled index option may be processed and given effect in accordance with and subject to the rules of the Clearing Corporation while trading in the option is delayed, halted, or suspended if it can be documented, in a form prescribed by the Exchange, that the decision to exercise the option was made during allowable time frames prior to the delay, halt, or suspension.

(ii) Exercises of expiring American-style, cash-settled index options shall not be prohibited on the last business day prior to their expiration.

(iii) Exercises of American-style, cash-settled index options shall not be prohibited during a trading halt that occurs at or after 4:00 p.m. Eastern time. In the event of such a trading halt, exercises may occur through 4:20 p.m. Eastern time. In addition, if trading resumes following such a trading halt (such as by closing rotation), exercises may occur during the resumption of trading and for five (5) minutes after the close of the resumption of trading. The provisions of this subparagraph (iii) are subject to the authority of the Board to impose restrictions on transactions and exercises pursuant to Rule 417.

(iv) An Exchange official designated by the Board may determine to permit the exercise of American-style, cash-settled index options while trading in such options is delayed, halted, or suspended.

Rule 1407. Short Sales in Nasdaq National Market Securities

* * * * *

(c) A short sale may be designated as a bid test exempt sale if:

(1) The sale qualifies for an exemption from the short sale bid test established in NASD rule 3350; or

(2) The short sale is by or for the account of a Primary or Competitive Market Maker and is an exempt hedge transaction in a designated Nasdaq National Market security underlying a class of stock options or *included in an index underlying a class of index options* to which a registered ISE market maker is appointed under Rule 803.

(d) Definitions. For purposes of paragraph (c) of this Rule:

(1) An ''exempt hedge transaction'' shall mean a short sale in a designated Nasdaq National Market security that was effected to hedge, and in fact serves to hedge, an existing offsetting options position or an offsetting options position that was created in one or more transactions contemporaneous with the short sale, provided that[,]*:*

(i) In the case of a stock option, when establishing the short position the market maker receives or is eligible to receive good faith margin pursuant to Section 220.12 of Regulation T of the Federal Reserve Board for that transaction[.]*; and*

(ii) In the case of an index option, (A) the designated Nasdaq National Market security sold short is a component security of the index underlying such index option, (B) at least ten percent (10%) of the value of the index underlying such index option is represented by one or more designated Nasdaq National Market securities, and (C) the current aggregate value of the designated Nasdaq National Market securities sold short does not exceed the aggregate current index value of the index options position being hedged. Notwithstanding the foregoing, a transaction unrelated to normal options market making activity, such as index arbitrage or risk arbitrage that in either case is independent of a market maker's market making functions, will not be considered an ''exempt hedge transaction.'' Once an underlying index has satisfied the ten percent (10%) test in this subparagraph (ii), the continued qualification of the index shall be reviewed as of the end of each calendar quarter, and the index shall cease to qualify if the value of the index represented by one or more designated Nasdaq National Market securities is less than eight percent (8%) at the end of any subsequent calendar quarter.

* * * * *

Chapter 20

Index Rules

Rule 2000. Application of Index Rules

The Rules in this Chapter are applicable only to index options (options on indices of securities as defined below). The Rules in Chapters 1 through 19 are also applicable to the options provided for in this Chapter, unless such Rules are specifically replaced or are supplemented by Rules in this Chapter. Where the Rules in this Chapter indicate that particular indices or requirements with respect to particular indices will be ''Specified,'' the Exchange shall file a proposed rule change with the Commission to specify such indices or requirements.

Rule 2001. Definitions

(a) The term ''aggregate exercise price'' means the exercise price of the options contract times the index multiplier.

(b) The term ''American-style index option'' means an option on an industry or market index that can be exercised on any business day prior to expiration.

(c) The term ''A.M.-settled index option'' means an index options contract for which the current index value at expiration shall be determined as provided in Rule 2009(a)(5).

(d) The term ''call'' means an options contract under which the holder of the option has the right, in accordance with the terms of the option, to purchase from the Clearing Corporation the current index value times the index multiplier.

(e) The term ''current index value'' with respect to a particular index options contract means the level of the underlying index reported by the reporting authority for the index, or any multiple or fraction of such reported level specified by the Exchange. The current index value with respect to a reduced-value long term options contract is one-tenth of the current index value of the related index option. The ''closing index value'' shall be the last index value reported on a business day.

(f) The term ''exercise price'' means the specified price per unit at which the current index value may be purchased or sold upon the exercise of the option.

(g) The term ''European-style index option'' means an option on an industry or market index that can be exercised only on the last business day prior to the day it expires.

(h) The term ''index multiplier'' means the amount specified in the contract by which the current index value is to be multiplied to arrive at the value required to be delivered to the holder of a call or by the holder of a put upon valid exercise of the contract.

(i) The term ''industry index'' and ''narrow-based index'' mean an index designed to be representative of a particular industry or a group of related industries.

(j) The term ''market index'' and ''broad-based index'' mean an index designed to be representative of a stock market as a whole or of a range of companies in unrelated industries.

(k) The term ''put'' means an options contract under which the holder of the option has the right, in accordance with the terms and provisions of the option, to sell to the Clearing Corporation the current index value times the index multiplier.

(l) The term ''reporting authority'' with respect to a particular index means the institution or reporting service designated by the Exchange as the official source for (1) calculating the level of the index from the reported prices of the underlying securities that are the basis of the index and (2) reporting such level. The reporting authority for each index approved for options trading on the Exchange shall be Specified (as provided in Rule 2000) in the Supplementary Material to this Rule 2001.

(m) The term ''underlying security'' or ''underlying securities'' with respect to an index options contract means any of the securities that are the basis for the calculation of the index.

Rule 2002. Designation of an Index

(a) The component securities of an index underlying an index option contract need not meet the requirements of Rule 502. Except as set forth in subparagraph (b) below, the listing of a class of index options on an industry index requires the filing of a proposed rule change to be approved by the SEC under Section 19(b) of the Exchange Act.

(b) The Exchange may trade options on a narrow-based index pursuant to Rule 19b-4(e) of the Securities Exchange Act of 1934, if each of the following conditions is satisfied:

(1) The options are designated as A.M.-settled index options;

(2) The index is capitalization-weighted, price-weighted or equal dollar-weighted, and consists of 10 or more component securities;

(3) Each component security has a market capitalization of at least $75 million, except that for each of the lowest weighted component securities in the index that in the aggregate account for no more than 10 percent of the

weight of the index, the market capitalization is at least $50 million;

(4) Trading volume of each component security has been at least one million shares for each of the last six months, except that for each of the lowest weighted component securities in the index that in the aggregate account for no more than 10 percent of the weight of the index, trading volume has been at least 500,000 shares for each of the last six months;

(5) In a capitalization-weighted index, the lesser of the five highest weighted component securities in the index or the highest weighted component securities in the index that in the aggregate represent at least 30 percent of the total number of component securities in the index each have had an average monthly trading volume of at least 2,000,000 shares over the past six months;

(6) No single component security represents more than 25 percent of the weight of the index, and the five highest weighted component securities in the index do not in the aggregate account for more than 50 percent (60 percent for an index consisting of fewer than 25 component securities) of the weight of the index;

(7) Component securities that account for at least 90 percent of the weight of the index and at least 80 percent of the total number of component securities in the index satisfy the requirements of Rule 502 applicable to individual underlying securities;

(8) All component securities are ''reported securities'' as defined in Rule 11Aa3–1 under the Exchange Act;

(9) Non-U.S. component securities (stocks or ADRs) that are not subject to comprehensive surveillance agreements do not in the aggregate represent more than 20 percent of the weight of the index;

(10) The current underlying index value will be reported at least once every 15 seconds during the time the index options are traded on the Exchange;

(11) An equal dollar-weighted index will be rebalance at least once every calendar quarter; and

(12) If an underlying index is maintained by a broker-dealer, the index is calculated by a third party who is not a broker-dealer, and the broker-dealer has erected a ''Chinese Wall'' around its personnel who have access to information concerning changes in and adjustments to the index.

(c) The following maintenance listing standards shall apply to each class of index options originally listed pursuant to paragraph (b) above:

(1) The requirements stated in subparagraphs (b)(1), (3), (6), (7), (8), (9), (10), (11) and (12) must continue to be satisfied, provided that the requirements stated in subparagraph (b)(6) must be satisfied only as of the first day of January and July in each year;

(2) The total number of component securities in the index may not increase or decrease by more than 33⅓ percent from the number of component securities in the index at the time of its initial listing, and in no event may be less than nine component securities;

(3) Trading volume of each component security in the index must be at least 500,000 shares for each of the last six months, except that for each of the lowest weighted component securities in the index that in the aggregate account for no more than 10 percent of the weight of the index, trading volume must be at least 400,000 shares for each of the last six months; and

(4) In a capitalization-weighted index, the lesser of the five highest weighted component securities in the index or the highest weighted component securities in the index that in the aggregate represent at least 30 percent of the total number of stocks in the index each have had an average monthly trading volume of at least 1,000,000 shares over the past six months. In the event a class of index options listed on the Exchange fails to satisfy the maintenance listing standards set forth herein, the Exchange shall not open for trading any additional series of options of that class unless such failure is determined by the Exchange not to be significant and the SEC concurs in that determination, or unless the continued listing of that class of index options has been approved by the SEC under Section 19(b)(2) of the Exchange Act.

Rule 2003. Dissemination of Information

(a) The Exchange shall disseminate, or shall assure that the current index value is disseminated, after the close of business and from time-to-time on days on which transactions in index options are made on the Exchange.

(b) The Exchange shall maintain, in files available to the public, information identifying the stocks whose prices are the basis for calculation of the index and the method used to determine the current index value.

Rule 2004. Position Limits for Broad-Based Index Options

(a) Rule 412 generally shall govern position limits for broad-based index options, as modified by this Rule 2004. There may be no position limit for certain Specified (as provided in Rule 2000) broad-based index options contracts. All other broad-based index options contracts shall be subject to a contract limitation fixed by the Exchange, which shall not be larger than limits Specified (as provided in Rule 2000) in this paragraph.

(b) Index options contracts shall not be aggregated with options contracts on any stocks whose prices are the basis for calculation of the index.

(c) Positions in reduced-value index options shall be aggregated with positions in full-value indices. For such purposes, ten reduced-value contracts shall equal one contract.

Rule 2005. Position Limits for Industry Index Options

(a)(1) Rule 412 generally shall govern position limits for industry index options, as modified by this Rule 2005. Options contracts on an industry index shall, subject to the procedures specified in subparagraph (3) of this rule, be subject to the following position limits:

(i) 18,000 contracts if the Exchange determines, at the time of a review conducted pursuant to subparagraph (2) of this paragraph (a), that any single underlying stock accounted, on average, for thirty percent (30%) or more of the index value during the thirty (30) -day period immediately preceding the review; or

(ii) 24,000 contracts if the Exchange determines, at the time of a review conducted pursuant to subparagraph (2) of this paragraph (a), that any single underlying stock accounted, on average, for twenty percent (20%) or more of the index value or that any five (5) underlying stocks together accounted, on average, for more than fifty percent (50%) of the index value, but that no single stock in the group accounted, on average, for thirty percent (30%) or more of the index value, during the thirty (30)-day period immediately preceding the review; or

(iii) 31,500 contracts if the Exchange determines that the conditions specified above which would require the establishment of a lower limit have not occurred.

(2) The Exchange shall make the determinations required by subparagraph (1) of this paragraph (a) with respect to options on each industry index at the commencement of trading of such options on the Exchange and thereafter review the determination semi-annually on January 1 and July 1.

(3) If the Exchange determines, at the time of a semi-annual review, that the position limit in effect with respect to

options on a particular industry index is lower than the maximum position limit permitted by the criteria set forth in paragraph (1) of this paragraph (a), the Exchange may effect an appropriate position limit increase immediately. If the Exchange determines, at the time of a semi-annual review, that the position limit in effect with respect to options on a particular industry index exceeds the maximum position limit permitted by the criteria set forth in subparagraph (1) of this paragraph (a), the Exchange shall reduce the position limit applicable to such options to a level consistent with such criteria; provided, however, that such a reduction shall not become effective until after the expiration date of the most distantly expiring options series relating to the industry index that is open for trading on the date of the review; and provided further that such a reduction shall not become effective if the Exchange determines, at the next semi-annual review, that the existing position limit applicable to such options is consistent with the criteria set forth in subparagraph (1) of this paragraph (a).

(b) Index options contracts shall not be aggregated with options contracts on any stocks whose prices are the basis for calculation of the index.

(c) Positions in reduced-value index options shall be aggregated with positions in full-value index options. For such purposes, ten (10) reduced-value options shall equal one (1) full-value contract.

Rule 2006. Exemptions From Position Limits

(a) Broad-based Index Hedge Exemption. The broad-based index hedge exemption is in addition to the other exemptions available under Exchange Rules, interpretations and policies. The following procedures and criteria must be satisfied to qualify for a broad-based index hedge exemption:

(1) The account in which the exempt options positions are held (''hedge exemption account'') must have received prior Exchange approval for the hedge exemption specifying the maximum number of contracts that may be exempt under this Rule. The hedge exemption account must have provided all information required on Exchange-approved forms and must have kept such information current. Exchange approval may be granted on the basis of verbal representations, in which event the hedge exemption account shall within two business days, or such other time period designated by the Exchange, furnish the Exchange with appropriate forms and documentation substantiating the basis for the exemption. The hedge exemption account may apply from time to time for an increase in the maximum number of contracts exempt from the position limits.

(2) A hedge exemption account that is not carried by a Member must be carried by a member of a self-regulatory organization participating in the Intermarket Surveillance Group.

(3) The hedge exemption account maintains a qualified portfolio, or will effect transactions necessary to obtain a qualified portfolio concurrent with or at or about the same time as the execution of the exempt options positions, of:

(i) A net long or short position in common stocks in at least four industry groups and contains at least twenty (20) stocks, none of which accounts for more than fifteen percent (15%) of the value of the portfolio or in securities readily convertible, and additionally in the case of convertible bonds economically convertible, into common stocks which would comprise a portfolio; or

(ii) A net long or short position in index futures contracts or in options on index futures contracts, or long or short positions in index options or index warrants, for which the underlying index is included in the same margin or cross-margin product group cleared at the Clearing Corporation as the index options class to which the hedge exemption applies.

To remain qualified, a portfolio must at all times meet these standards notwithstanding trading activity.

(4) The exemption applies to positions in broad-based index options dealt in on the Exchange and is applicable to the unhedged value of the qualified portfolio. The unhedged value will be determined as follows:

(i) The values of the net long or short positions of all qualifying products in the portfolio are totaled;

(ii) For positions in excess of the standard limit, the underlying market value (A) of any economically equivalent opposite side of the market calls and puts in broad-based index options, and (B) of any opposite side of the market positions in stock index futures, options on stock index futures, and any economically equivalent opposite side of the market positions, assuming no other hedges for these contracts exist, is subtracted from the qualified portfolio; and

(iii) The market value of the resulting unhedged portfolio is equated to the appropriate number of exempt contracts as follows: the unhedged qualified portfolio is divided by the correspondent closing index value and the quotient is then divided by the index multiplier or 100.

(5) Positions in broad-based index options that are traded on the Exchange are exempt from the standard limits to the extent Specified (as provided in Rule 2000) in this subparagraph (a)(5).

(6) Only the following qualified hedging transactions and positions are eligible for purposes of hedging a qualified portfolio (i.e. stocks, futures, options and warrants) pursuant to this Rule:

(i) Long put(s) used to hedge the holdings of a qualified portfolio;

(ii) Long call(s) used to hedge a short position in a qualified portfolio;

(iii) Short call(s) used to hedge the holdings of a qualified portfolio; and

(iv) Short put(s) used to hedge a short position in a qualified portfolio. The following strategies may be effected only in conjunction with a qualified stock portfolio for non-P.M. settled, European style index options only:

(v) A short call position accompanied by long put(s), where the short call(s) expires with the long put(s), and the strike price of the short call(s) equals or exceeds the strike price of the long put(s) (a ''collar''). Neither side of the collar transaction can be in-the-money at the time the position is established. For purposes of determining compliance with Rule 411 and this Rule 2006, a collar position will be treated as one contract;

(vi) A long put position coupled with a short put position overlying the same broad-based index and having an equivalent underlying aggregate index value, where the short put(s) expires with the long put(s), and the strike price of the long put(s) exceeds the strike price of the short put(s) (a ''debit put spread position''); and

(vii) A short call position accompanied by a debit put spread position, where the short call(s) expires with the puts and the strike price of the short call(s) equals or exceeds the strike price of the long put(s). Neither side of the short call, long put transaction can be in-the-money at the time the position is established. For purposes of determining compliance with Rule 412 and this Rule 2006, the short call and long put positions will be treated as one contract.

(7) The hedge exemption account shall:

(i) Liquidate and establish options, stock positions, their equivalent or other qualified portfolio products in an orderly fashion; not initiate or liquidate positions in a manner calculated to cause unreasonable price fluctuations or unwarranted price changes; and not initiate or liquidate a stock position or its equivalent with an equivalent index options position with a view toward

taking advantage of any differential in price between a group of securities and an overlying stock index option;

(ii) Liquidate any options prior to or contemporaneously with a decrease in the hedged value of the qualified portfolio which options would thereby be rendered excessive; and

(iii) Promptly notify the Exchange of any material change in the qualified portfolio which materially affects the unhedged value of the qualified portfolio.

(8) If an exemption is granted, it will be effective at the time the decision is communicated. Retroactive exemptions will not be granted.

(9) The hedge exemption account shall promptly provide to the Exchange any information requested concerning the qualified portfolio.

(10) Positions included in a qualified portfolio that serve to secure an index hedge exemption may not also be used to secure any other position limit exemption granted by the Exchange or any other self regulatory organization or futures contract market.

(11) Any Member that maintains a broad-based index options position in such Member's own account or in a customer account, and has reason to believe that such position is in excess of the applicable limit, shall promptly take the action necessary to bring the position into compliance. Failure to abide by this provision shall be deemed to be a violation of Rules 412 and this Rule 2006 by the Member.

(12) Violation of any of the provisions of this Rule, absent reasonable justification or excuse, shall result in withdrawal of the index hedge exemption and may form the basis for subsequent denial of an application for an index hedge exemption hereunder.

(13) Each member (other than Exchange market-makers) that maintains a broad-based index options position on the same side of the market in excess of a Specified (as provided in Rule 2000) number of contracts for its own account or for the account of a customer, shall report information as to whether the positions are hedged and provide documentation as to how such contracts are hedged, in the manner and form required by the Exchange. The Exchange may impose other reporting requirements.

(14) Whenever the Exchange determines that additional margin is warranted in light of the risks associated with an under-hedged options position in Specified (as provided in Rule 2000) broad-based indices, the Exchange may impose additional margin upon the account maintaining such under-hedged position pursuant to its authority under Rule 1204. The clearing firm carrying the account also will be subject to capital charges under Rule 15c3–1 under the Exchange Act to the extent of any margin deficiency resulting from the higher margin requirements.

(b) Industry Index Hedge Exemption. The industry (narrow-based) index hedge exemption is in addition to the other exemptions available under Exchange Rules, interpretations and policies, and may not exceed twice the standard limit established under Rule 2005. Industry index options positions may be exempt from established position limits for each options contract ''hedged'' by an equivalent dollar amount of the underlying component securities or securities convertible into such components; provided that, in applying such hedge, each options position to be exempted is hedged by a position in at least seventy-five percent (75%) of the number of component securities underlying the index. In addition, the underlying value of the options position may not exceed the value of the underlying portfolio. The value of the underlying portfolio is: (1) the total market value of the net stock position; and (2) for positions in excess of the standard limit, subtract the underlying market value of: (i) any offsetting calls and puts in the respective index option; (ii) any offsetting positions in related stock index futures or options; and (iii) any economically equivalent positions (assuming no other hedges for these contracts exist). The following procedures and criteria must be satisfied to qualify for an industry index hedge exemption:

(1) The hedge exemption account must have received prior Exchange approval for the hedge exemption specifying the maximum number of contracts that may be exempt under this Interpretation. The hedge exemption account must have provided all information required on Exchange-approved forms and must have kept such information current. Exchange approval may be granted on the basis of verbal representations, in which event the hedge exemption account shall within two business days, or such other time period designated by the Exchange, furnish the Exchange with appropriate forms and documentation substantiating the basis for the exemption. The hedge exemption account may apply from time to time for an increase in the maximum number of contracts exempt from the position limits.

(2) A hedge exemption account that is not carried by a Member must be carried by a member of a self-regulatory organization participating in the Intermarket Surveillance Group.

(3) The hedge exemption account: shall liquidate and establish options, stock positions, or economically equivalent positions in an orderly fashion; shall not initiate or liquidate positions in a manner calculated to cause unreasonable price fluctuations or unwarranted price changes; and shall not initiate or liquidate a stock position or its equivalent with an equivalent index options position with a view toward taking advantage of any differential in price between a group of securities and an overlying stock index option. The hedge exemption account shall liquidate any options prior to or contemporaneously with a decrease in the hedged value of the portfolio which options would thereby be rendered excessive. The hedge exemption account shall promptly notify the Exchange of any change in the portfolio which materially affects the unhedged value of the portfolio.

(4) If an exemption is granted, it will be effective at the time the decision is communicated. Retroactive exemptions will not be granted.

(5) The hedge exemption account shall promptly provide to the Exchange any information requested concerning the portfolio.

(6) Positions included in a portfolio that serve to secure an index hedge exemption may not also be used to secure any other position limit exemption granted by the Exchange or any other self regulatory organization or futures contract market.

(7) Any Member that maintains an industry index options position in such Member's own account or in a customer account, and has reason to believe that such position is in excess of the applicable limit, shall promptly take the action necessary to bring the position into compliance. Failure to abide by this provision shall be deemed to be a violation of Rule 412 and this Rule 2006 by the Member.

(8) Violation of any of the provisions of this Rule 2006, absent reasonable justification or excuse, shall result in withdrawal of the index hedge exemption and may form the basis for subsequent denial of an application for an index hedge exemption hereunder.

Rule 2007. Exercise Limits

(a) In determining compliance with Rule 414, exercise limits for index options contracts shall be equivalent to the position limits prescribed for options contracts with the nearest expiration date in Rule 2004 or 2005. There may be no exercise limits for

Specified (as provided in Rule 2000) broad-based index options.

(b) For a market-maker granted an exemption to position limits pursuant to Rule 413(b), the number of contracts that can be exercised over a five business day period shall equal the market-maker's exempted position.

(c) In determining compliance with exercise limits applicable to stock index options, options contracts on a stock index group shall not be aggregated with options contracts on an underlying stock or stocks included in such group, options contracts on one stock index group shall not be aggregated with options contracts on any other stock index group.

(d) With respect to index options contracts for which an exemption has been granted in accordance with the provisions of Rule 2006(a), the exercise limit shall be equal to the amount of the exemption.

Rule 2008. Trading Sessions

(a) Days and Hours of Business. Except as otherwise provided in this Rule or under unusual conditions as may be determined by the President or his designee, transactions in index options may be effected on the Exchange between the hours of 9:30 a.m. and 4:15 p.m. Eastern time. With respect to options on foreign indexes, an Exchange official designated by the Board shall determine the days and hours of business.

(b) Trading Rotations. The opening rotation for index options shall be held at or as soon as practicable after 9:30 a.m. Eastern time. An Exchange official designated by the Board may delay the commencement of the opening rotation in an index option whenever in the judgment of that official such action is appropriate in the interests of a fair and orderly market. Among the factors that may be considered in making these determinations are: (1) Unusual conditions or circumstances in other markets; (2) an influx of orders that has adversely affected the ability of the Primary Market Maker to provide and to maintain fair and orderly markets; (3) activation of opening price limits in stock index futures on one or more futures exchanges; (4) activation of daily price limits in stock index futures on one or more futures exchanges; (5) the extent to which either there has been a delay in opening or trading is not occurring in stocks underlying the index; and (6) circumstances such as those which would result in the declaration of a fast market under Rule 804(d).

(c) Instituting Halts and Suspensions. Trading on the Exchange in any index option shall be halted or suspended whenever trading in underlying securities whose weighted value represents more than twenty percent (20%), in the case of a broad based index, and ten percent (10%) for all other indices, of the index value is halted or suspended. An Exchange official designated by the Board also may halt trading in an index option when, in his or her judgment, such action is appropriate in the interests of a fair and orderly market and to protect investors. Among the facts that may be considered are the following:

(1) Whether all trading has been halted or suspended in the market that is the primary market for a plurality of the underlying stocks;

(2) Whether the current calculation of the index derived from the current market prices of the stocks is not available;

(3) The extent to which the rotation has been completed or other factors regarding the status of the rotation; and

(4) Other unusual conditions or circumstances detrimental to the maintenance of a fair and orderly market are present, including, but not limited to, the activation of price limits on futures exchanges.

(d) Resumption of Trading Following a Halt or Suspension. Trading in options of a class or series that has been the subject of a halt or suspension by the Exchange may resume if an Exchange official designated by the Board determines that the interests of a fair and orderly market are served by a resumption of trading. Among the factors to be considered in making this determination are whether the conditions that led to the halt or suspension are no longer present, and the extent to which trading is occurring in stocks underlying the index. Upon reopening, a rotation shall be held in each class of index options unless an Exchange official designated by the Board concludes that a different method of reopening is appropriate under the circumstances, including but not limited to, no rotation, an abbreviated rotation or any other variation in the manner of the rotation.

(e) Circuit Breakers. Rule 703 applies to index options trading with respect to the initiation of a marketwide trading halt commonly known as a ''circuit breaker.''

(f) Special Provisions for Foreign Indices. When the hours of trading of the underlying primary securities market for an index option do not overlap or coincide with those of the Exchange, all of the provisions as described in paragraphs (c), (d) and (e) above shall not apply except for (c)(4).

(g) Pricing When Primary Market Does Not Open. When the primary market for a security underlying the current index value of an index option does not open for trading on a given day, the price of that security shall be determined, for the purposes of calculating the current index value at expiration, based on the opening price of that security on the next day that its primary market is open for trading. This procedure shall not be used if the current index value at expiration is fixed in accordance with the Rules and By-Laws of the Clearing Corporation.

Rule 2009. Terms of Index Options Contracts

(a) General.

(1) Meaning of Premium Bids and Offers. Bids and offers shall be expressed in terms of dollars and cents per unit of the index.

(2) Exercise Prices. The Exchange shall determine fixed-point intervals of exercise prices for call and put options.

(3) Expiration Months. Index options contracts may expire at three (3)-month intervals or in consecutive months. The Exchange may list up to six (6) expiration months at any one time, but will not list index options that expire more than twelve (12) months out.

(4) ''European-Style Exercise.'' Specified (as provided in Rule 2000) European-style index options, some of which may be A.M.-settled as provided in paragraph (a)(5), may be approved for trading on the Exchange.

(5) A.M.-Settled Index Options. The last day of trading for A.M.-settled index options shall be the business day preceding the last day of trading in the underlying securities prior to expiration. The current index value at the expiration of an A.M.-settled index option shall be determined, for all purposes under these Rules and the Rules of the Clearing Corporation, on the last day of trading in the underlying securities prior to expiration, by reference to the reported level of such index as derived from first reported sale (opening) prices of the underlying securities on such day, except that:

(i) In the event that the primary market for an underlying security does not open for trading on that day, the price of that security shall be determined, for the purposes of calculating the current index value at expiration, as set forth in Rule 2008(g), unless the current index value at expiration is fixed in accordance with the Rules and By-Laws of the Clearing Corporation; and

(ii) In the event that the primary market for an underlying security is open for trading on that day, but that

particular security does not open for trading on that day, the price of that security, for the purposes of calculating the current index value at expiration, shall be the last reported sale price of the security.

A.M.-settled index options that are approved for trading on the Exchange shall be Specified (as provided in Rule 2000) in this subparagraph (a)(5).

(b) Long-Term Index Options Series.

(1) Notwithstanding the provisions of Paragraph (a)(3), above, the Exchange may list long-term index options series that expire from twelve (12) to sixty (60) months from the date of issuance.

(i) Index long term options series may be based on either the full or reduced value of the underlying index. There may be up to ten (10) expiration months, none further out than sixty (60) months. Strike price interval, bid/ask differential and continuity Rules shall not apply to such options series until the time to expiration is less than twelve (12) months.

(ii) When a new Index long term options series is listed, such series will be opened for trading either when there is buying or selling interest, or forty (40) minutes prior to the close, whichever occurs first. No quotations will be posted for such options series until they are opened for trading.

(2) Reduced-Value Long Term Options Series.

(i) Reduced-value long term options series may be approved for trading on Specified (as provided in Rule 2000) indices.

(ii) Expiration Months. Reduced-value long term options series may expire at six-month intervals. When a new expiration month is listed, series may be near or bracketing the current index value. Additional series may be added when the value of the underlying index increases or decreases by ten (10) to fifteen (15) percent.

(c) Procedures for Adding and Deleting Strike Prices. The procedures for adding and deleting strike prices for index options are provided in Rule 504, as amended by the following:

(1) The interval between strike prices will be no less than $5.00; provided, that in the case of the certain Specified (as provided in Rule 2000) classes of index options, the interval between strike prices will be no less than $2.50.

(2) New series of index options contracts may be added up to the fifth business day prior to expiration.

(3) When new series of index options with a new expiration date are opened for trading, or when additional series of index options in an existing expiration date are opened for trading as the current value of the underlying index to which such series relate moves substantially from the exercise prices of series already opened, the exercise prices of such new or additional series shall be reasonably related to the current value of the underlying index at the time such series are first opened for trading. In the case of all classes of index options, the term ''reasonably related to the current value of the underlying index'' shall have the meaning set forth in Paragraph (c)(4) below.

(4) Notwithstanding any other provision of this paragraph (c), the Exchange may open for trading additional series of the same class of index options as the current index value of the underlying index moves substantially from the exercise price of those index options that already have been opened for trading on the Exchange. The exercise price of each series of index options opened for trading on the Exchange shall be reasonably related to the current index value of the underlying index to which such series relates at or about the time such series of options is first opened for trading on the Exchange. The term ''reasonably related to the current index value of the underlying index'' means that the exercise price is within thirty percent (30%) of the current index value. The Exchange may also open for trading additional series of index options that are more than thirty percent (30%) away from the current index value, provided that demonstrated customer interest exists for such series, as expressed by institutional, corporate, or individual customers or their brokers. Market-makers trading for their own account shall not be considered when determining customer interest under this provision.

(d) Index Level on the Last Day of Trading. The reported level of the underlying index that is calculated by the reporting authority on the last day of trading in the underlying securities prior to expiration for purposes of determining the current index value at the expiration of an A.M.-settled index option may differ from the level of the index that is separately calculated and reported by the reporting authority and that reflects trading activity subsequent to the opening of trading in any of the underlying securities.

(e) Index Values for Settlement. The Rules of the Clearing Corporation specify that, unless the Rules of the Exchange provide otherwise, the current index value used to settle the exercise of an index options contract shall be the closing index for the day on which the index options contract is exercised in accordance with the Rules of the Clearing Corporation or, if such day is not a business day, for the most recent business day.

Rule 2010. Debit Put Spread Cash Account Transactions

Debit put spread positions in European-style, broad-based index options traded on the Exchange (hereinafter ''debit put spreads'') may be maintained in a cash account as defined by Federal Reserve Board Regulation T Section 220.8 by a Public Customer, provided that the following procedures and criteria are met:

(a) The customer has received Exchange approval to maintain debit put spreads in a cash account carried by an Exchange member organization. A customer so approved is hereinafter referred to as a ''spread exemption customer.''

(b) The spread exemption customer has provided all information required on Exchange-approved forms and has kept such information current.

(c) The customer holds a net long position in each of the stocks of a portfolio that has been previously established or in securities readily convertible, and additionally in the case of convertible bonds economically convertible, into common stocks which would comprise a portfolio. The debit put spread position must be carried in an account with a member of a self-regulatory organization participating in the Intermarket Surveillance Group.

(d) The stock portfolio or its equivalent is composed of net long positions in common stocks in at least four industry groups and contains at least twenty (20) stocks, none of which accounts for more than fifteen percent (15%) of the value of the portfolio (hereinafter ''qualified portfolio''). To remain qualified, a portfolio must at all times meet these standards notwithstanding trading activity in the stocks.

(e) The exemption applies to European-style broad-based index options dealt in on the Exchange to the extent the underlying value of such options position does not exceed the unhedged value of the qualified portfolio. The unhedged value would be determined as follows: (1) The values of the net long or short positions of all qualifying products in the portfolio are totaled; (2) for positions in excess of the standard limit, the underlying market value (A) of any economically equivalent opposite side of the market calls and puts in broad-based index options, and (B) of any opposite side of the market positions in stock index futures, options on stock index futures,

and any economically equivalent opposite side of the market positions, assuming no other hedges for these contracts exist, is subtracted from the qualified portfolio; and (3) the market value of the resulting unhedged portfolio is equated to the appropriate number of exempt contracts as follows '' the unhedged qualified portfolio is divided by the correspondent closing index value and the quotient is then divided by the index multiplier or 100.

(f) A debit put spread in Exchange-traded broad-based index options with European-style exercises is defined as a long put position coupled with a short put position overlying the same broad-based index and having an equivalent underlying aggregate index value, where the short put(s) expires with the long put(s), and the strike price of the long put(s) exceeds the strike price of the short put(s). A debit put spread will be permitted in the cash account as long as it is continuously associated with a qualified portfolio of securities with a current market value at least equal to the underlying aggregate index value of the long side of the debit put spread.

(g) The qualified portfolio must be maintained with either a Member, another broker-dealer, a bank, or securities depository.

(h) The spread exemption customer shall agree promptly to provide the Exchange any information requested concerning the dollar value and composition of the customer's stock portfolio, and the current debit put spread positions.

(1) The spread exemption customer shall agree to and any Member carrying an account for the customer shall:

(i) Comply with all Exchange Rules and regulations;

(ii) liquidate any debit put spreads prior to or contemporaneously with a decrease in the market value of the qualified portfolio, which debit put spreads would thereby be rendered excessive; and

(iii) promptly notify the Exchange of any change in the qualified portfolio or the debit put spread position which causes the debit put spreads maintained in the cash account to be rendered excessive.

(i) If any Member carrying a cash account for a spread exemption customer with a debit put spread position dealt in on the Exchange has a reason to believe that as a result of an opening options transaction the customer would violate this spread exemption, and such opening transaction occurs, then the Member has violated this Rule 2010.

(j) Violation of any of these provisions, absent reasonable justification or excuse, shall result in withdrawal of the spread exemption and may form the basis for subsequent denial of an application for a spread exemption hereunder.

Rule 2011. Disclaimers

(a) Applicability of Disclaimers. The disclaimers in paragraph (b) below shall apply to the reporting authorities identified in the Supplemental Material to Rule 2001.

(b) Disclaimer. No reporting authority, and no affiliate of a reporting authority (each such reporting authority, its affiliates, and any other entity identified in this Rule are referred to collectively as a ''Reporting Authority''), makes any warranty, express or implied, as to the results to be obtained by any person or entity from the use of an index it publishes, any opening, intra-day or closing value therefor, or any data included therein or relating thereto, in connection with the trading of any options contract based thereon or for any other purpose. The Reporting Authority shall obtain information for inclusion in, or for use in the calculation of, such index from sources it believes to be reliable, but the Reporting Authority does not guarantee the accuracy or completeness of such index, any opening, intra-day or closing value therefor, or any date included therein or related thereto. The Reporting Authority hereby disclaims all warranties of merchantability or fitness for a particular purpose or use with respect to such index, any opening, intra-day, or closing value therefor, any data included therein or relating thereto, or any options contract based thereon. The Reporting Authority shall have no liability for any damages, claims, losses (including any indirect or consequential losses), expenses, or delays, whether direct or indirect, foreseen or unforeseen, suffered by any person arising out of any circumstance or occurrence relating to the person's use of such index, any opening, intra-day or closing value therefor, any data included therein or relating thereto, or any options contract based thereon, or arising out of any errors or delays in calculating or disseminating such index.

Rule 2012. Exercise of American-Style Index Options

No Member may prepare, time stamp or submit an exercise instruction for an American-style index options series if the Member knows or has reason to know that the exercise instruction calls for the exercise of more contracts than the then ''net long position'' of the account for which the exercise instruction is to be tendered. For purposes of this Rule: (i) The term ''net long position'' shall mean the net position of the account in such option at the opening of business of the day of such exercise instruction, plus the total number of such options purchased that day in opening purchase transactions up to the time of exercise, less the total number of such options sold that day in closing sale transactions up to the time of exercise; (ii) the ''account'' shall be the individual account of the particular customer, market-maker or ''non-customer'' (as that term is defined in the By-Laws of the Clearing Corporation) who wishes to exercise; and (iii) every transaction in an options series effected by a market-maker in a market-maker's account shall be deemed to be a closing transaction in respect of the market-maker's then positions in such options series. No Member may adjust the designation of an ''opening transaction'' in any such option to a ''closing transaction'' except to remedy mistakes or errors made in good faith.

II. Self-Regulatory Organization's Statement of the Purpose of, and Statutory Basis for, the Proposed Rule Change

In its filing with the Commission, the ISE included statements concerning the purpose of, and basis for, the proposed rule change, as amended, and discussed any comments it received on the proposed rule change, as amended. The text of these statements may be examined at the places specified in Item IV below. The ISE has prepared summaries, set forth in Sections A, B, and C below, of the most significant aspects of such statements.

A. Self-Regulatory Organization's Statement of the Purpose of, and Statutory Basis for, the Proposed Rule Change

1. Purpose

The ISE seeks to adopt rules necessary to allow the Exchange to list and trade options on indices. The proposed rules include listing and maintenance criteria for options on underlying indices, rules on dissemination of index values, position and exercise limits for index options, exemptions from the limits, and terms of index options contracts. All of the proposed rules and changes to existing Exchange Rules are based on the existing rules of the other four options exchanges.[5]

Because the rules related to trading options on indices are product specific in many areas, the Exchange will need

[5] *See, e.g.* CBOE Rules 4.11, 4.16, 6.2, 6.7, 8.7, 11.1, 15.10, and 24.1 through 24.20, PCX Rules 7.11 and 13.2, Amex Rule 905C, and Phlx Rule 1033A.

to file additional proposed rule changes with the Commission when the Exchange identifies specific products. For purposes of this proposed rule change, certain rules indicate that they apply to ''specified'' indices. ISE Rules 2001(l), 2004(a), 2006(a), 2007(a), 2009, and 2011 all contain provisions that are dependant upon the Exchange identifying specific index products in the rule. Accordingly, ISE Rule 2000 states that where the rules in Chapter 20 indicate that particular indices or requirements with respect to particular indices will be ''Specified,'' the ISE shall file a proposed rule change with the Commission pursuant to Section 19 of the Act[6] and Rule 19b–4 thereunder[7] to specify such indices or requirements.

The ISE proposes to add a new Chapter 20 to the Exchange rules, as well as conforming changes to certain existing ISE rules. The following are the specific rule changes:

Proposed ISE Rule 2000: This proposed rule specifies that Chapter 20 is applicable only to index options, and that the rules in Chapters 1 through 19 also apply to index options unless they are replaced by the new rules or the context otherwise requires.

Proposed ISE Rule 2001: This proposed rule contains the necessary definitions for index options trading.

Proposed ISE Rule 2002: This proposed rule contains the general listing standards for index option.

Proposed ISE Rule 2003: This proposed rule requires the dissemination of index values as a condition to the trading of options on an index.

Proposed ISE Rules 2004 through 2007: These proposed rules contain the standard position limit and exercise limits for index options, as well as exemption standards and the procedures for requesting exemptions from those proposed rules.

Proposed ISE Rule 2008: This proposed rule provides that index options will trade until 4:15 p.m. Eastern Time, the same as on other exchanges. The proposed rule also contains procedures for trading rotations, as well as trading halts and suspensions.

Proposed ISE Rules 2009 and 2010: Proposed ISE Rule 2009 outlines the terms of index options contracts, while proposed ISE Rule 2010 applies to debit put spreads.

Proposed ISE Rule 2011: This proposed rule disclaims liability for index reporting authorities.

Proposed ISE Rule 2012: This proposed rule contains standards for exercising American-style index options.

Amendment to ISE Rule 413: This proposed amendment adds broad-based index options to the market maker exemption from position limits.

Amendments to ISE Rules 418 and 1100: In conjunction with proposed ISE Rule 2012, this proposed rule will govern the exercise of American-style, cash settled index options.

Amendment to ISE Rule 701: This proposed amendment applies the trading rotation rule to index options.

Amendment to ISE Rule 705: In conjunction with ISE Rule 2011, this proposed rule would limit liability regarding the dissemination of index information.

Amendment to ISE Rule 803: This proposed amendment provides the Exchange with greater flexibility on applying market making obligations when the primary underlying securities market is not open for trading. It would apply only to the trading of options on non-U.S. indices.

Amendment to ISE Rule 1407: This proposed amendment would apply an exemption from the Nasdaq short sale rule to Nasdaq NMS securities underlying index options.

2. Statutory Basis

The ISE believes that the proposed rule change, as amended, is consistent with and furthers the objectives of section 6(b)(5) of the Act,[8] in that it is designed to foster cooperation and coordination with persons engaged in regulating, clearing, settling, processing information with respect to, and facilitating transaction in securities, to remove impediments to and perfect the mechanism for a free and open market and a national market system, and, in general, to protect investors and the public interest.

B. Self-Regulatory Organization's Statement on Burden on Competition

The ISE does not believe that the proposed rule change, as amended, will result in any burden on competition that is not necessary or appropriate in furtherance of the purposes of the Act.

C. Self-Regulatory Organization's Statement on Comments on the Proposed Rule Change Received From Members, Participants, or Others

No written comments were solicited or received with respect to the proposed rule change, as amended.

III. Date of Effectiveness of the Proposed Rule Change and Timing for Commission Action

Within 35 days of the date of publication of this notice in the **Federal Register** or within such longer period (i) as the Commission may designate up to 90 days of such date if it finds such longer period to be appropriate and publishes its reasons for so finding, or (ii) as to which the ISE consents, the Commission will:

(A) By order approve such proposed rule change, as amended; or

(B) Institute proceedings to determine whether the proposed rule change, as amended, should be disapproved.

IV. Solicitation of Comments

Interested persons are invited to submit written data, views, and arguments concerning the foregoing, including whether the proposed rule change, as amended, is consistent with the Act. Persons making written submissions should file six copies thereof with the Secretary, Securities and Exchange Commission, 450 Fifth Street, NW., Washington, DC 20549–0609. Copies of the submission, all subsequent amendments, all written statements with respect to the proposed rule change, as amended, that are filed with the Commission, and all written communications relating to the proposed rule change, as amended, between the Commission and any person, other than those that may be withheld from the public in accordance with the provisions of 5 U.S.C. 552, will be available for inspection and copying in the Commission's Public Reference Room. Copies of such filings will also be available for inspection and copying at the principal office of ISE. All submissions should refer to File No. SR-ISE–2003–05 and should be submitted by May 23, 2003.

For the Commission, by the Division of Market Regulation, pursuant to delegated authority.[9]

Margaret H. McFarland,

Deputy Secretary.

[FR Doc. 03–10822 Filed 5–1–03; 8:45 am]

BILLING CODE 8010–01–P

[6] 15 U.S.C 78s.

[7] 17 CFR 240.19b–4.

[8] 15 U.S.C. 78(f)(b)(5).

[9] 17 CFR 200.30–3(a)(12).

DEPARTMENT OF STATE

[Public Notice 4345]

60-Day Notice of Proposed Information Collection: Form DS–3013, Application for Assistance Under The Hague Convention on the Civil Aspects of International Child Abduction; OMB Collection Number 1405–0076

AGENCY: Department of State.

ACTION: Notice.

SUMMARY: The Department of State is seeking Office of Management and Budget (OMB) approval for the information collection described below. The purpose of this notice is to allow 60 days for public comment in the **Federal Register** preceding submission to OMB. This process is conducted in accordance with the Paperwork Reduction Act of 1995.

The following summarizes the information collection proposal to be submitted to OMB:

Type of Request: Extension of currently approved collection.

Originating Office: Bureau of Consular Affairs, Overseas Citizens Services, Office of Children's Issues, CA/OCS/CI.

Title of Information Collection: Application for Assistance Under The Hague Convention on the Civil Aspects of International Child Abduction.

Frequency: On occasion.

Form Number: DS–3013.

Respondents: Individuals.

Estimated Number of Respondents: 500.

Average Hours Per Response: 1.

Total Estimated Burden: 500 hours.

Public comments are being solicited to permit the agency to:

- Evaluate whether the proposed information collection is necessary for the proper performance of the functions of the agency.
- Evaluate the accuracy of the agency's estimate of the burden of the proposed collection, including the validity of the methodology and assumptions used.
- Enhance the quality, utility, and clarity of the information to be collected.
- Minimize the reporting burden on those who are to respond, including through the use of automated collection techniques or other forms of technology.

FOR FURTHER INFORMATION CONTACT: Public comments, or requests for additional information, regarding the collection listed in this notice should be directed to Sandra McNeilly, CA/OCS/CI, U.S. Department of State, Washington, DC 20520–4818, who may be reached on (202) 312–9710.

Dated: April 14, 2003.

Dianne M. Andruch,

Deputy Assistant Secretary, Bureau of Consular Affairs, Department of State.

[FR Doc. 03–10885 Filed 5–1–03; 8:45 am]

BILLING CODE 4710–06–P

DEPARTMENT OF TRANSPORTATION

Office of the Secretary

Aviation Proceedings, Agreements Filed the Week Ending April 25, 2003

The following Agreements were filed with the Department of Transportation under the provisions of 49 U.S.C. 412 and 414. Answers may be filed within 21 days after the filing of the application.

Docket Number: OST–2003–15016.
Date Filed: April 22, 2003.
Parties: Members of the International Air Transport Association.
Subject:
PTC2 EUR–AFR 0170 dated February 28, 2003
TC2 Europe—Africa Resolutions r1—r36
Minutes—PTC2 EUR–AFR 0171 dated April 1, 2003
Tables—PTC2 EUR–AFR Fares 0098 dated March 7, 2003
Intended effective date: May 1, 2003.

Docket Number: OST–2003–15020.
Date Filed: April 23, 2003.
Parties: Members of the International Air Transport Association.
Subject:
PTC3 0641 dated April 23, 2003
Mail Vote 296—Resolution 010k
TC3 Between Japan, Korea and South East Asia
Special Passenger Amending Resolution between China (excluding Hong Kong SAR and Macao SAR) and Japan.
Fares Between Yantai and Osaka, between Nanjing and Tokyo.
Intended effective date: May 1, 2003.

Docket Number: OST–2003–15022.
Date Filed: April 23, 2003.
Parties: Members of the International Air Transport Association.
Subject:
PTC3 0640 dated April 23, 2003
Mail Vote 295—Resolution 010j
TC3 Special Passenger Amending Resolution
From Papua New Guinea
Intended effective date: May 1, 2003.

Docket Number: OST–2003–15042.
Date Filed: April 24, 2003.
Parties: Members of the International Air Transport Association.
Subject:
PTC2 EUR 0513 dated April 22, 2003
Mail Vote 292—Resolution 010e r1–r3
TC2 Within Europe Special Passenger Amending Resolution from Algerie
PTC2 EUR–AFR 0173 dated April 25, 2003
Mail Vote 292—Resolution 010e r4–r6
TC2 Special Passenger Amending Resolution from Algerie to Western Africa
PTC2 EUR–ME 0158 dated April 25, 2003
Mail Vote 292—Resolution 010e r7–r11
TC2 Special Passenger Amending Resolution from Algerie to Middle East
Intended effective date: May 1, 2003.

Docket Number: OST–2003–15044.
Date Filed: April 24, 2003.
Parties: Members of the International Air Transport Association.
Subject:
PTC3 0642 dated April 22, 2003
Mail Vote 297—Resolution 0101
TC3 Between Japan, Korea and South East Asia
Special Passenger Amending Resolution between Japan and Chinese Taipei
Intended effective date: June 1, 2003.

Andrea M. Jenkins,

Docket Operations, Federal Register Liaison.

[FR Doc. 03–10834 Filed 5–1–03; 8:45 am]

BILLING CODE 4910–62–P

DEPARTMENT OF TRANSPORTATION

Federal Aviation Administration

Advisory Circular 120–79, Developing and Implementing a Continuing Analysis and Surveillance System

AGENCY: Federal Aviation Administration (FAA) DOT.

ACTION: Notice of availability.

SUMMARY: This notice announces the issuance and availability of Advisory Circular (AC) 120–79, ''Developing and Implementing a Continuing Analysis and Surveillance System''. AC 120–79 provides information on how to implement a continuing and analysis and surveillance system (CASS) that is required for certain types of air carriers and commercial operators under Title 14 of the Code of Federal Regulations §§ 121.373 and 135.431. A CASS is a quality management system for air carriers and commercial operators that monitors and analyzes the performance and effectiveness of inspection and maintenance programs.

DATES: Advisory Circular 120–79, Developing and Implementing a Continuing Analysis and Surveillance System was issued by the Office of the

Director, Flight Standards Service, AFS–1 on April 21, 2003.

FOR FURTHER INFORMATION CONTACT: Russell S. Unangst, Jr., Technical Advisor for Aircraft Maintenance, AFS–304, Federal Aviation Administration, Aircraft Maintenance Division, Flight Standards Service, 800 Independence Ave., SW., Washington, DC 20591; telephone (202) 267–3786; facsimile (202) 267–5115, e-mail *russell, unangst@faa.gov*.

SUPPLEMENTARY INFORMATION: How to Obtain a Copy of the AC or How to Obtain Copies: This AC can be read or downloaded from the Internet at *http://www2.faa.gov/avr/afs/index.cfm* under the ''All Advisory Circulars'' hyperlink. Paper copies of the AC will be available in approximately 6–8 weeks from the U.S. Department of Transportation, Subsequent Distribution Office, SVC–121.23, Ardmore East Business Center, 3341 Q 75th Avenue, Landover, MD 20785.

Issued in Washington, DC, on March 25, 2003.

Carol E. Giles,

Assistant Manager, Aircraft Maintenance Division, Flight Standards Service.

[FR Doc. 03–10835 Filed 5–1–03; 8:45 am]

BILLING CODE 4910–13–M

DEPARTMENT OF TRANSPORTATION

Federal Aviation Administration

Notice of Intent To Rule on Application 03–06–C–00–OTH To Impose and Use the Revenue From a Passenger Facility Charge (PFC) at North Bend Municipal Airport, Submitted by the City of North Bend, Municipal Airport, North Bend, OR

AGENCY: Federal Aviation Administration (FAA), DOT.

ACTION: Notice of intent to rule on application.

SUMMARY: The FAA proposes to rule and invites public comment on the application to impose and use PFC revenue at North Bend Municipal Airport under the provisions of 49 U.S.C. 40117 and part 158 of the Federal Aviation Regulations (14 CFR part 158).

DATES: Comments must be received on or before June 2, 2003.

ADDRESSES: Comments on this application may be mailed or delivered in triplicate to the FAA at the following address: Mr. J. Wade Bryant, Manager, Seattle Airports District Office, SEA–ADO; Federal Aviation Administration; 1601 Lind Avenue SW., Suite 250, Renton, Washington 98055–4056.

In addition, one copy of any comments submitted to the FAA must be mailed or delivered to Mr. Gary LeTellier, Airport Manager, at the following address: City of North Bend/Port Of Coos Bay, 2348 Colordado Avenue, North Bend, Oregon 97459.

Air Carriers and foreign air carriers may submit copies of written comments previously provided to North Bend Municipal Airport, under § 158.23 of part 158.

FOR FURTHER INFORMATION CONTACT: Ms. Suzanne Lee-Pang, (425) 227–2654, Seattle Airports District Office, SEA–ADO; Federal Aviation Administration; 1601 Lind Avenue SW., Suite 250, Renton, Washington 98055–4056. The application may be reviewed in person at this same location.

SUPPLEMENTARY INFORMATION: The FAA proposes to rule and invites public comment on the application 03–06–C–00–OTH to impose and use PFC revenue at North Bend Municipal Airport, under the provisions of 49 U.S.C. 40117 and part 158 of the Federal Aviation Regulations (14 CFR part 158).

On April 23, 2003, the FAA determined that the application to impose and use the revenue from a PFC submitted by City of North Bend, North Bend Municipal Airport, North Bend, Oregon, was substantially complete within the requirements of § 158.25 of part 158. The FAA will approve or disapprove the application, in whole or in part, no later than July 25, 2003.

The following is a brief overview of the application.

Level of the proposed PFC: $4.50.

Proposed charge effective date: June 1, 2004.

Proposed charge expiration date: January 1, 2007.

Total requested for use approval: $287,000.

Brief description of proposed project: Renovation of Runway 13/31 Lighting System and Signage System; Navigational Aids and Backup Generator Renovations for Runway 13/31; Drainage Improvements/Parallel Taxiway System for Runway 13/31; Reconstruction and Extension of Parallel Taxiway System for Runway 13/31; Security Enhancements; Environmental Assessment for Relocation of Taxiway C; Existing Terminal Renovation.

Class or classes of air carrier, which the public agency has requested not be required to collect PFC's: Nonscheduled air taxi/commercial operators utilizing aircraft having seating capacity of less than 20 passengers.

Any person may inspect the application in person at the FAA office listed above under **FOR FURTHER INFORMATION CONTACT** and at the FAA Regional Airports Office located at: Federal Aviation Administration, Northwest Mountain Region, Airports Division, ANM–600, 1601 Lind Avenue SW., Suite 315, Renton, WA 98055–4056.

In addition, any person may, upon request, inspect the application, notice and other documents germane to the application in person at the North Bend Municipal Airport.

Issued in Renton, Washington on April 23, 2003.

David A. Field,

Manager, Planning, Programming, and Capacity Branch, Northwest Mountain Region.

[FR Doc. 03–10836 Filed 5–1–03; 8:45 am]

BILLING CODE 4910–13–M

DEPARTMENT OF TRANSPORTATION

Federal Highway Administration

Federal Transit Administration

Environmental Impact Statement: Salt Lake Utah Counties, Utah

AGENCY: Federal Highway Administration (FHWA), DOT., Federal Transit Administration (FTA), DOT.

ACTION: Notice of intent.

SUMMARY: The FHWA and FTA are issuing this notice to advise the public that an Environmental Impact Statement (EIS) will be prepared for a proposed transportation improvement project in Salt Lake and Utah Counties, Utah.

FOR FURTHER INFORMATION CONTACT: Carlos C. Machado, Program Manager, Federal Highway Administration, 2520 West 4700 South, Suite 9A, Salt Lake City, UT 84118, Telephone: (801) 963–0182, E-mail: *carlos.machado@fhwa.dot.gov* or Donald D. Cover, Project Manager, Federal Transit Administration, 216 16th St., Suite 650, Denver, CO 80202–5120, Telephone (303) 844–3242, E-mail: *don.cover@fta.dot.gov.*

SUPPLEMENTARY INFORMATION: The FHWA and FTA, in cooperation with the Utah Department of Transportation (UDOT), the Utah Transit Authority (UTA), the Mountainland Association of Governments (MAG), and the Wasatch Front Regional Council (WFRC), will prepare an EIS on a proposal to address projected transportation demand in the western Salt Lake Valley south of I–80 and the western Utah Lake Valley north of Utah Lake. Although the exact limits of the study area have not been defined the transportation needs that will be

evaluated in the proposal extend northward from the northern shore of Utah Lake in Utah County to Interstate 80 in Salt Lake County. The eastern limits of the study area extend to Bangerter Highway north of 13400 South in Salt Lake County and I–15 from 13400 South down into Utah County. The western limit of the study area in Salt Lake and Utah counties is the Oquirrh foothills.

To provide for local and regional travel demands, the long-range transportation plans developed by the local Metropolitan Planning Organizations, WFRC and MAG, have identified the need for an improved transportation system in the study area. The proposed corridor is approximately 35 miles long. Alternatives under consideration include (1) taking no-action (no-build); (2) transportation system management; and (3) build alternatives. A multi-modal evaluation of transportation improvements in the corridor will be the focus of the study. Transportation build alternatives to be studied include, but are not limited to: (1) Collector roadway; (2) freeway; (3) arterial roadway; (4) transit; (5) combinations of any of the above; and (6) other feasible alternatives identified during the scoping process.

Letters describing the proposed action and soliciting comments will be sent to appropriate federal, state, and local agencies, and to private organizations and citizens who have previously expressed or are known to have interest in this proposal. A series of public scoping meetings will be held in the project study area from 5:30 p.m. to 9 p.m. as follows: Wednesday, May 21, 2003, Eagle Crest Elementary School, 2760 North 300 West Lehi, UT; Wednesday, May 28, 2003, South Hills Middle School Cafeteria, 13508 South 4000 West, Riverton, UT; Thursday, May 29, 2003, West Jordan High School Commons Area, 8136 South 2700 West, West Jordan, UT; Wednesday, June 4, 2003, Granger High School Cafeteria, 3690 South West, West Valley City, UT; and Thursday, June 5, 2003, Pleasant Grove Jr. High Cafeteria 810 North 100 East Pleasant Grove, UT. Public notices announcing these meetings will be published in the region. Information regarding this meeting and the project may also be obtained through a public Web site, *www.udot.utah.gov/mountainview.* In addition to the public scoping meetings, public hearings will be held after the draft EIS has been prepared. The draft EIS will be available for public and agency review and comment before the public hearing.

To ensure that full ranges of issues related to the proposed action are addressed and all significant issues identified, comments and suggestions are invited from all interested parties. Comments or questions concerning the proposed action and the EIS should be directed to the FHWA or FTA at the addresses provided above.

(Catalog of Federal and Domestic Assistance Program Number 20.205, Highway Research, Planning and Construction. The regulations implementing Executive Order 12372 regarding intergovernmental consultation on federal programs and activities apply to this program.)

Issued on: April 23, 2003.

David C. Gibbs,

Division Administrator, Federal Highway Administration, Salt Lake City, Utah.

Lee O. Waddleton,

Regional Administrator, Federal Transit Administration, Denver, Colorado.

[FR Doc. 03–10845 Filed 5–1–03; 8:45 am]

BILLING CODE 4910–22–M

DEPARTMENT OF TRANSPORTATION

Federal Railroad Administration

Petition for Modification of a Waiver of Compliance

In accordance with 49 CFR 211.9 and 211.41 notice is hereby given that the Federal Railroad Administration (FRA) has received a request for a modification to a waiver of compliance from certain requirements of Federal railroad safety regulations. The individual petition is described below, including the party seeking relief, the regulatory provisions involved, the nature of the relief being requested and the petitioner's arguments in favor of relief.

CSX Transportation (Waiver Petition Docket Number FRA–2002–12507)

In 1998, CSX Transportation (CSXT) initiated a pilot program to develop, implement, and test technology designed to meet the RSAC Positive Train Control core objectives to prevent train collisions, overspeed derailments, and to further protect on-track workers. The system is referred to as Communications Based Train Management (CBTM). CSXT was granted a waiver for testing on the pilot territory between Spartanburg, South Carolina, and Augusta, Georgia. That waiver was granted as H–98–6, and has since been redocketed as FRA–2002–12507.

After successful completion of all lab and field qualification tests in 2000, crews began using the system when they operate an equipped locomotive over the pilot territory. Data is currently being gathered on CBTM's performance and crew acceptance in order to determine the requirements for a production system.

CSXT has requested to modify the existing waiver by extending the CBTM pilot territory to include the Blue Ridge subdivision, between Erwin, Tennessee, (milepost Z 138.0) and Spartanburg, South Carolina, (milepost MP Z 276.6) for the duration of the waiver, which has been granted through the conclusion of the test program. This expansion would allow CSXT to complete the software development necessary to adapt CBTM's basic principles to the signaled territory.

Any interested party desiring to protest the granting of an application shall set forth specifically the grounds upon which the protest is made, and include a concise statement of the interest of the party in the proceeding. Additionally, one copy of the protest shall be furnished to the applicant at the address listed above.

All communications concerning this proceeding should be identified by the docket number and must be submitted to the Docket Clerk, DOT Central Docket Management Facility, Room PL–401 (Plaza Level), 400 7th Street, SW., Washington, DC 20590–0001. Communications received within 30 days of the date of this notice will be considered by the FRA before final action is taken. Comments received after that date will be considered as far as practicable. All written communications concerning these proceedings are available for examination during regular business hours (9 a.m.–5 p.m.) at the above facility. All documents in the public docket are also available for inspection and copying on the internet at the docket facility's Web site at *http://dms.dot.gov.*

FRA expects to be able to determine these matters without an oral hearing. However, if a specific request for an oral hearing is accompanied by a showing that the party is unable to adequately present his or her position by written statements, an application may be set for public hearing.

Issued in Washington, DC on April 25, 2003.

Grady C. Cothen, Jr.,

Deputy Associate Administrator for Safety Standards and Program Development.

[FR Doc. 03–10833 Filed 5–1–03; 8:45 am]

BILLING CODE 4910–06–P

DEPARTMENT OF TRANSPORTATION

National Highway Traffic Safety Administration

[Docket No. NHTSA–2003–14838]

Federal Motor Vehicle Safety Standards; Occupant Crash Protection; Review: NCAP Test Improvements With Safety Belt Pretensioners and Load Limiters

AGENCY: National Highway Traffic Safety Administration (NHTSA), Department of Transportation.

ACTION: Request for comments on technical report and evaluation note.

SUMMARY: This notice announces NHTSA's publication of a Technical Report and an Evaluation Note reviewing and evaluating the effectiveness of safety belt pretensioners and load limiters, safety devices that manufacturers can voluntarily install in vehicles. The report's title is NCAP Test Improvements with Pretensioners and Load Limiters.

DATES: Comments must be received no later than September 2, 2003.

ADDRESSES: *Report:* You may obtain a copy of the report free of charge by sending a self-addressed mailing label to Communications Services (NPO–503), National Highway Traffic Safety Administration, 400 Seventh Street, SW., Washington, DC 20590. A summary of the report is available on the Internet for viewing online at *http://www.nhtsa.dot.gov/cars/rules/regrev/evaluate/809562.html.* The full report is available on the internet in PDF format at *http://www.nhtsa.dot.gov/cars/rules/regrev/evaluate/pdf/809562.pdf.*

Comments: All comments should refer to the Docket number of this notice (NHTSA–2003–14838). You may submit your comments in writing to: U.S. Department of Transportation Docket Management, Room PL–401, 400 Seventh Street, SW., Washington, DC 20590. You may also submit your comments electronically by logging onto the Dockets Management System Web site at *http://dms.dot.gov.* Click on ''Help'' to obtain instructions for filing the document electronically.

Anyone is able to search the electronic form of all comments received into any of our dockets by the name of the individual submitting the comment (or signing the comment, if submitted on behalf of an association, business, labor union, etc.). You may review DOT's complete Privacy Act Statement in the **Federal Register** published on April 11, 2000 (Volume 65, Number 70; Pages 19477–78) or you may visit *http://dms.dot.gov.*

You may call Docket Management at 202–366–9324 and visit the Docket from 10 a.m. to 5 p.m., Monday through Friday.

FOR FURTHER INFORMATION CONTACT: Charles J. Kahane, Chief, Evaluation Division, NPO–321, Planning, Evaluation, and Budget, National Highway Traffic Safety Administration, Room 5208, 400 Seventh Street, SW., Washington, DC 20590. Telephone: 202–366–2560. FAX: 202–366–2559. E-mail: *ckahane@nhtsa.dot.gov.*

For information about NHTSA's evaluations of the effectiveness of existing regulations and programs: Visit the NHTSA Web site at *http://www.nhtsa.dot.gov* and click ''Regulations & Standards'' underneath ''Vehicle & Equipment Information'' on the home page; then click ''Regulatory Evaluation'' on the ''Regulations & Standards'' page.

SUPPLEMENTARY INFORMATION: Scores on frontal New Car Assessment Program (NCAP) tests were obtained for passenger cars and light trucks which at one time did not have pretensioners and/or load limiters but later included them as standard equipment, in order to determine the effectiveness of these safety devices. The NCAP test is a 35 mph full-frontal crash into a rigid barrier, with 50th percentile male anthropomorphic dummies seated at the driver and right-front passenger positions, protected by the vehicle's safety belts. Seat belt pretensioners retract the seat belt almost instantly in a crash to remove excess slack, which helps to keep the occupant restrained. It also helps to position the occupant back and squarely in the seat, so that the air bag can more effectively deploy. Load limiters and other energy management systems allow seat belts to yield in a crash, preventing the shoulder belt from directing too much energy on the chest of the occupant. Note that load limiters are the primary, but not only, energy management method used in seat belts. Changes in NCAP scores of these vehicles were compared to those of vehicles that did not add either pretensioners or load limiters. The combination of pretensioners and load limiters is estimated to reduce (*i.e.*, improve) Head Injury Criterion (HIC) by 232, chest acceleration by an average of 6.6 g's, and chest deflection by 10.6 mm, for drivers and right front passengers. Each of these reductions is statistically significant. When looked at individually, pretensioners are more effective in reducing HIC scores for drivers and right front passengers, as well as chest acceleration and chest deflection scores for drivers. Load limiters show greater reductions in chest acceleration and chest deflection scores for right front passengers.

How Can I Influence NHTSA's Thinking on This Evaluation?

NHTSA welcomes public review of this preliminary report and invites reviewers to submit comments about the data, the statistical methods used in the analyses, and/or additional information. NHTSA will submit to the Docket a response to the comments and, if appropriate, additional analyses that supplement the report. If the comments warrant a significant revision, then NHTSA will either add an appendix to the report or publish a revised report; otherwise, this preliminary report will serve as the final report.

How Do I Prepare and Submit Comments?

Your comments must be written and in English. To ensure that your comments are correctly filed in the Docket, please include the Docket number of this document (NHTSA–2003–14838) in your comments.

Your primary comments must not be more than 15 pages long (49 CFR 553.21). However, you may attach additional documents to your primary comments. There is no limit on the length of the attachments.

Please send two paper copies of your comments to Docket Management or submit them electronically. The mailing address is U.S. Department of Transportation Docket Management, Room PL–401, 400 Seventh Street, SW., Washington, DC 20590. If you submit your comments electronically, log onto the Dockets Management System Web site at *http://dms.dot.gov* and click on ''Help'' to obtain instructions.

We also request, but do not require you to send a copy to Marie Walz, Evaluation Division, NPO–321, National Highway Traffic Safety Administration, Room 5208, 400 Seventh Street, SW, Washington, DC 20590 (alternatively, FAX to 202–366–2559 or e-mail to *Marie.Walz@nhtsa.dot.gov*) . She can check if your comments have been received at the Docket and she can expedite their review by NHTSA.

How Can I Be Sure That My Comments Were Received?

If you wish Docket Management to notify you upon its receipt of your comments, enclose a self-addressed, stamped postcard in the envelope containing your comments. Upon receiving your comments, Docket

Management will return the postcard by mail.

How Do I Submit Confidential Business Information?

If you wish to submit any information under a claim of confidentiality, send three copies of your complete submission, including the information you claim to be confidential business information, to the Chief Counsel, NCC–110, National Highway Traffic Safety Administration, Room 5219, 400 Seventh Street, SW., Washington, DC 20590. Include a cover letter supplying the information specified in our confidential business information regulation (49 CFR part 512).

In addition, send two copies from which you have deleted the claimed confidential business information to Docket Management, Room PL–401, 400 Seventh Street, SW., Washington, DC 20590, or submit them electronically.

Will the Agency Consider Late Comments?

In our response, we will consider all comments that Docket Management receives before the close of business on the comment closing date indicated above under **DATES**. To the extent possible, we will also consider comments that Docket Management receives after that date.

Please note that even after the comment closing date, we will continue to file relevant information in the Docket as it becomes available. Further, some people may submit late comments. Accordingly, we recommend that you periodically check the Docket for new material.

How Can I Read the Comments Submitted by Other People?

You may read the comments by visiting Docket Management in person at Room PL–401, 400 Seventh Street, SW, Washington, DC from 10 a.m. to 5 p.m., Monday through Friday.

You may also see the comments on the Internet by taking the following steps:

1. Go to the Docket Management System (DMS) Web page of the Department of Transportation (*http://dms.dot.gov*).

2. On that page, click on ''Simple Search.''

3. On the next page (*http://dms.dot.gov/search/searchFormSimple.cfm/*) type in the five-digit Docket number shown at the beginning of this Notice (14838). Click on ''Search.''

4. On the next page, which contains Docket summary information for the Docket you selected, click on the desired comments. You may also download the comments.

Authority: 49 U.S.C. 30111, 30168; delegation of authority at 49 CFR 1.50 and 501.8.

Rose A. McMurray,

Associate Administrator for Planning, Evaluation, and Budget.

[FR Doc. 03–10815 Filed 5–1–03; 8:45 am]

BILLING CODE 4910–59–P

DEPARTMENT OF TRANSPORTATION

Surface Transportation Board

[STB Finance Docket No. 34333]

Union Pacific Railroad Company—Trackage Rights Exemption—The Burlington Northern and Santa Fe Railway Company

The Burlington Northern and Santa Fe Railway Company (BNSF) has agreed to grant temporary overhead trackage rights to Union Pacific Railroad Company (UP) over BNSF's rail lines between BNSF milepost 141.7 near Rockview, MO, and BNSF milepost 422.2 near Jonesboro, AR, a distance of approximately 181.6 miles.[1]

The parties intended to consummate the transaction on April 16, 2003; however, the earliest the transaction could have been consummated was April 21, 2003, the effective date of the exemption.[2] The temporary trackage rights will allow UP to facilitate maintenance work on its lines.[3]

As a condition to this exemption, any employees affected by the trackage rights will be protected by the conditions imposed in *Norfolk and Western Ry. Co.—Trackage Rights—BN,* 354 I.C.C. 605 (1978), as modified in *Mendocino Coast Ry., Inc.—Lease and Operate,* 360 I.C.C. 653 (1980).

This notice is filed under 49 CFR 1180.2(d)(7). If it contains false or misleading information, the exemption is void *ab initio.* Petitions to revoke the exemption under 49 U.S.C. 10502(d) may be filed at any time. The filing of a petition to revoke will not automatically stay the transaction.

An original and 10 copies of all pleadings, referring to STB Docket No. 34333, must be filed with the Surface Transportation Board, 1925 K Street, NW., Washington, DC 20423–0001. In addition, a copy of each pleading must be served on T. Christopher Lewis, 1416 Dodge Street, Room 830, Omaha, NE 68179.

Board decisions and notices are available on our Web site at *http://www.stb.dot.gov.*

Decided: April 25, 2003.

By the Board, David M. Konschnik, Director, Office of Proceedings.

Vernon A. Williams,

Secretary.

[FR Doc. 03–10874 Filed 5–1–03; 8:45 am]

BILLING CODE 4915–01–P

[1] The milepost numbers do not reflect the actual length of the BNSF line segment, because the trackage includes portions of two BNSF subdivisions that have noncontiguous milepost designations.

[2] Under 49 CFR 1180.4(g), a railroad must file a verified notice of the transaction with the Board at least one week in advance of consummation, in order to qualify for an exemption under 49 CFR 1180.2(d). In this case, the verified notice was filed on April 14, 2003. By letter dated April 17, 2003, counsel for UP acknowledged that the transaction could not be consummated until April 21, 2003.

[3] On April 14, 2003, UP concurrently filed a petition for partial revocation of the trackage rights class exemption in STB Finance Docket No. 34333 (Sub-No. 1), *Union Pacific Railroad Company—Trackage Rights Exemption—The Burlington Northern and Santa Fe Railway Company.* In its petition, UP requests that the Board permit the proposed overhead trackage rights arrangement described in this notice to expire on or about May 10, 2003, when maintenance work is scheduled to be completed. The petition for partial revocation will be addressed by the Board in a separate decision.

DEPARTMENT OF THE TREASURY

Internal Revenue Service

Proposed Collection; Comment Request for Form 1040EZ

AGENCY: Internal Revenue Service (IRS), Treasury.

ACTION: Notice and request for comments.

SUMMARY: The Department of the Treasury, as part of its continuing effort to reduce paperwork and respondent burden, invites the general public and other Federal agencies to take this opportunity to comment on proposed and/or continuing information collections, as required by the Paperwork Reduction Act of 1995, Pub. L. 104–13 (44 U.S.C. 3506(c)(2)(A)). Currently, the IRS is soliciting comments concerning Form 1040EZ, Income Tax Return for Single and Joint Filers With No Dependents.

DATES: Written comments should be received on or before July 1, 2003 to be assured of consideration.

ADDRESSES: Direct all written comments to Glenn P. Kirkland, Internal Revenue Service, room 6411, 1111 Constitution Avenue, NW., Washington, DC 20224.

FOR FURTHER INFORMATION CONTACT: Requests for additional information or copies of the form and instructions should be directed to Carol Savage at Internal Revenue Service, room 6407, 1111 Constitution Avenue, NW.,

Washington, DC 20224, or at (202) 622–3945, or through the Internet at *CAROL.A.SAVAGE@irs.gov.*

SUPPLEMENTARY INFORMATION:

Title: Income Tax Return for Single and Joint Filers With No Dependents.

OMB Number: 1545–0675.

Form Number: 1040EZ.

Abstract: This form is used by certain individuals to report their income subject to income tax and to figure their correct tax liability. The data is also used to verify that the items reported on the form are correct and are also for general statistical use.

Current Actions: There are no changes being made to the form at this time.

Type of Review: Extension of a currently approved collection.

Affected Public: Individuals or households.

Estimated Number of Respondents: 20,158,076.

Estimated Time Per Response: 3 hr., 43 min.

Estimated Total Annual Burden Hours: 57,844,351.

The following paragraph applies to all of the collections of information covered by this notice:

An agency may not conduct or sponsor, and a person is not required to respond to, a collection of information unless the collection of information displays a valid OMB control number. Books or records relating to a collection of information must be retained as long as their contents may become material in the administration of any internal revenue law. Generally, tax returns and tax return information are confidential, as required by 26 U.S.C. 6103.

Request for Comments: Comments submitted in response to this notice will be summarized and/or included in the request for OMB approval. All comments will become a matter of public record. Comments are invited on: (a) Whether the collection of information is necessary for the proper performance of the functions of the agency, including whether the information shall have practical utility; (b) the accuracy of the agency's estimate of the burden of the collection of information; (c) ways to enhance the quality, utility, and clarity of the information to be collected; (d) ways to minimize the burden of the collection of information on respondents, including through the use of automated collection techniques or other forms of information technology; and (e) estimates of capital or start-up costs and costs of operation, maintenance, and purchase of services to provide information.

Approved: April 28, 2003.

Glenn P. Kirkland,

IRS Reports Clearance Officer.

[FR Doc. 03–10925 Filed 5–1–03; 8:45 am]

BILLING CODE 4830–01–P

DEPARTMENT OF THE TREASURY

Internal Revenue Service

Proposed Collection, Comment Request for Form 637 Questionnaires

AGENCY: Internal Revenue Service (IRS), Treasury.

ACTION: Notice and request for comments.

SUMMARY: The Department of the Treasury, as part of its continuing effort to reduce paperwork and respondent burden, invites the general public and other Federal agencies to take this opportunity to comment on proposed and/or continuing information collections, as required by the Paperwork Reduction Act of 1995, Public Law 104–13 (44 U.S.C. 3506(c)(2)(A)). Currently, the IRS is soliciting comments concerning Questionnaires A, B, C, D, E, F, H, I, J, K, M, Q, R, S, T, UP, UV, V, W, X, and Y, Form 637 Questionnaires.

DATES: Written comments should be received on or before July 1, 2003 to be assured of consideration.

ADDRESSES: Direct all written comments to Glenn P. Kirkland, Internal Revenue Service, room 6411, 1111 Constitution Avenue NW., Washington, DC 20224.

FOR FURTHER INFORMATION CONTACT: Requests for additional information or copies of Form 637 Questionnaires should be directed to Carol Savage at Internal Revenue Service, room 6407, 1111 Constitution Avenue, NW., Washington, DC 20224, or at (202) 622–3945, or through the internet at *CAROL.A.SAVAGE@irs.gov.*

SUPPLEMENTARY INFORMATION:

Title: Form 637 Questionnaires.

OMB: 1545–1835.

Form Number: Questionnaires A, B, C, D, E, F, H, I, J, K, M, Q, R, S, T, UP, UV, V, W, X, and Y.

Abstract: Form 637 Questionnaires will be used to collect information about persons who are registered with the Internal Revenue Service (IRS) in accordance with Internal Revenue Code (IRC) § 4104 or 4222. The information will be used to make an informed decision on whether the applicant/registrant qualifies for registration.

Current Actions: There are no changes being made to the schedules at this time.

Type of Review: Extension of a currently approved collection.

Affected Public: Business or other for-profit organizations.

Estimated Number of Respondents: 2,840.

Estimated Average Time Per Respondent: 1 hours, 14 minutes.

Estimated Total Annual Burden Hours: 3,479.

The following paragraph applies to all of the collections of information covered by this notice:

An agency may not conduct or sponsor, and a person is not required to respond to, a collection of information unless the collection of information displays a valid OMB control number. Books or records relating to a collection of information must be retained as long as their contents may become material in the administration of any internal revenue law. Generally, tax returns and tax return information are confidential, as required by 26 U.S.C. 6103.

Request for Comments: Comments submitted in response to this notice will be summarized and/or included in the request for OMB approval. All comments will become a matter of public record. Comments are invited on: (a) Whether the collection of information is necessary for the proper performance of the functions of the agency, including whether the information shall have practical utility; (b) the accuracy of the agency's estimate of the burden of the collection of information; (c) ways to enhance the quality, utility, and clarity of the information to be collected; (d) ways to minimize the burden of the collection of information on respondents, including through the use of automated collection techniques or other forms of information technology; and (e) estimates of capital or start-up costs and costs of operation, maintenance, and purchase of services to provide information.

Approved: April 28, 2003.

Glenn P. Kirkland,

IRS Reports Clearance Officer.

[FR Doc. 03–10926 Filed 5–1–03; 8:45 am]

BILLING CODE 4830–01–M

DEPARTMENT OF THE TREASURY

Internal Revenue Service

Advisory Group to the Internal Revenue Service, Tax Exempt and Government Entities Division (TE/GE); Meeting

AGENCY: Internal Revenue Service (IRS), Treasury.

ACTION: Notice.

SUMMARY: The Advisory Committee on Tax Exempt and Government Entities (ACT) will hold a public meeting on Wednesday, May 21, 2003.

FOR FURTHER INFORMATION CONTACT: Steven J. Pyrek, Director, Communications and Liaison; 1111 Constitution Ave., NW., T:CL; Washington, DC 20224. Telephone: 202–283–9966 (not a toll-free number). E-mail address: *Steve.J.Pyrek@irs.gov.*

SUPPLEMENTARY INFORMATION: By notice herein given, pursuant to section 10(a)(2) of the Federal Advisory Committee Act, 5 U.S.C. App. (1988), a public meeting of the ACT will be held on Wednesday, May 21, 2003, from 9 a.m. to 4 p.m., at Treasury Executive Institute, Room A, located in the U.S. Mint Federal Building; 801 9th Street., NW., Washington, DC. Issues to be discussed relate to Employee Plans, Exempt Organizations, and Government Entities.

Reports from four ACT subgroups cover the following topics:

- Exempt Organizations Determinations Process Review.
- TE/GE Audit Issues.
- Abusive Tax Shelters Involving Tax Exempt and Government Entities.
- Gateway Opportunities: Federal, State, and Local Governments (FSLG) and its Customers.

Last minute agenda changes may preclude advance notice. Due to limited seating and security requirements, attendees must call Demetrice Tuppince to confirm their attendance.

Ms. Tuppince can be reached at (202) 283–9954. Attendees are encouraged to arrive at least 30 minutes before the meeting begins to allow sufficient time for security clearance. Picture identification must be presented. Please use the main entrance at 801 9th Street, NW to enter the building.

Should you wish the ACT to consider a written statement, please call (202) 283–9966, or write to: Internal Revenue Service; 1111 Constitution Ave., NW; T:CL–Penn Bldg; Washington, DC 20224, or e-mail *Steve.J.Pyrek@irs.gov.*

Dated: April 22, 2003.

Steven J. Pyrek,

Designated Federal Official, Tax Exempt and Government Entities Division.

[FR Doc. 03–10929 Filed 5–1–03; 8:45 am]

BILLING CODE 4830–01–M

DEPARTMENT OF THE TREASURY

Internal Revenue Service

Open Meeting of the Wage & Investment Reducing Taxpayer Burden (Notices) Issue Committee of the Taxpayer Advocacy Panel

AGENCY: Internal Revenue Service (IRS), Treasury.

ACTION: Notice.

SUMMARY: An open meeting of the Wage & Investment Reducing Taxpayer Burden (Notices) Issue Committee of the Taxpayer Advocacy Panel will be conducted (via teleconference).

DATES: The meeting will be held Wednesday, May 21, 2003.

FOR FURTHER INFORMATION CONTACT: Nancy Ferree at 1–888–912–1227, or 954–423–7979.

SUPPLEMENTARY INFORMATION: Notice is hereby given pursuant to Section 10(a)(2) of the Federal Advisory Committee Act, 5 U.S.C. App. (1988) that an open meeting of the Wage & Investment Reducing Taxpayer Burden (Notices) Issue Committee of the Taxpayer Advocacy Panel will be held Wednesday, May 21, 2003, from 12 noon EST to 1 pm EST via a telephone conference call. The Taxpayer Advocacy Panel is soliciting public comments, ideas and suggestions on improving customer service at the Internal Revenue Service. Individual comments will be limited to 5 minutes. If you would like to have the TAP consider a written statement, please call 1–888–912–1227 or 954–423–7979, or write Sallie Chavez, TAP Office, 1000 South Pine Island Road, Suite 340, Plantation, FL 33324. Due to limited conference lines, notification of intent to participate in the telephone conference call meeting must be made with Sallie Chavez. Ms. Chavez can be reached at 1–888–912–1227 or 954–423–7973.

The agenda will include the following: IRS Notices.

Note: Last minute changes to the agenda are possible and could prevent effective advance notice.

Dated: April 28, 2003.

Deryle J. Temple,

Director, Taxpayer Advocacy Panel.

[FR Doc. 03–10927 Filed 5–1–03; 8:45 am]

BILLING CODE 4830–01–P

DEPARTMENT OF THE TREASURY

Internal Revenue Service

Open Meeting of the Area 1 Taxpayer Advocacy Panel (Including the States of New York, Connecticut, Massachusetts, Rhode Island, New Hampshire, Vermont and Maine)

AGENCY: Internal Revenue Service (IRS), Treasury.

ACTION: Notice.

SUMMARY: An open meeting of the Area 1 Taxpayer Advocacy Panel will be conducted (via teleconference).

DATES: The meeting will be held Tuesday, May 27, 2003.

FOR FURTHER INFORMATION CONTACT: Marisa Knispel at 1–888–912–1227, or 718–488–3557.

SUPPLEMENTARY INFORMATION: Notice is hereby given pursuant to section 10(a)(2) of the Federal Advisory Committee Act, 5 U.S.C. App. (1988) that an open meeting of the Area 1 Taxpayer Advocacy Panel will be held Tuesday, May 27, 2003 from 1 p.m. EST to 2 p.m. EST via a telephone conference call. The public is invited to make oral comments. Individual comments will be limited to 5 minutes. If you would like to have the TAP consider a written statement, please call 1–888–912–1227 or 718–488–3557, or write Marisa Knispel, TAP Office, 10 Metrotech Center, 625 Fulton Street, Brooklyn, NY 11021, or post comments to the Web site: *http://www.improveirs.org.* Due to limited conference lines, notification of intent to participate in the telephone conference call meeting must be made in advance with Marisa Knispel. Ms. Knispel can be reached at 1–888–912–1227 or 718–488–3557.

The agenda will include the following: Various IRS issues.

Note: Last minute changes to the agenda are possible and could prevent effective advance notice.

Dated: April 23, 2003.

Deryle Temple,

Director, Taxpayer Advocacy Panel.

[FR Doc. 03–10928 Filed 5–1–03; 8:45 am]

BILLING CODE 4830–01–P

DEPARTMENT OF THE TREASURY

United States Mint

Request for CCAC Membership Applications

SUMMARY: The United States Mint is accepting applications for membership to the Citizens Coinage Advisory

Committee (CCAC) for two positions—a representative from the general public and a representative specially qualified in American history. Public Law 108–15 established the CCAC to:

- Advise the Secretary of the Treasury on any theme or design proposals relating to circulating coinage, bullion coinage, Congressional gold medals, and national and other medals produced by the United States Mint;
- Advise the Secretary of the Treasury with regard to the events, persons, or places that the Committee recommends to be commemorated by the issuance of commemorative coins in each of the five calendar years succeeding the year in which a commemorative coin designation is made; and
- Make recommendations with respect to the mintage level for any commemorative coin recommended.

Total membership consists of eleven voting members appointed by the Secretary of the Treasury:

- One person specially qualified by virtue of his or her education, training or experience as nationally or internationally recognized curator in the United States of a numismatic collection;
- One person specially qualified by virtue of his or her experience in the medallic arts or sculpture;
- One person specially qualified by virtue of his or her education, training, or experience in American history;
- One person specially qualified by virtue of his or her education, training, or experience in numismatics;
- Three persons who can represent the interests of the general public in the coinage of the United States; and
- Four persons appointed by the Secretary of the Treasury on the basis of the recommendations by the House and Senate leadership.

The Committee is subject to the direction of the Secretary of the Treasury. Meetings of the CCAC are open to the public and will be held bi-monthly on the third Wednesday. The United States Mint is responsible for providing the necessary support services for the Committee. Committee members are not paid for their time or services, but, consistent with Federal Travel Regulations, members are reimbursed for their travel and lodging expenses to attend approximately two meetings each year. Members may be subject to the Standards of Ethical Conduct for Employees of the Executive Branch (5 CFR Part 2653).

The United States Mint will review all submissions and will forward its recommendations to the Secretary of the Treasury for appointment consideration. Candidates who represent the interests of the general public should include their knowledge of history, youth interests, or an understanding of American culture and history. Candidates who believe that they are specially qualified to serve by reason of their education, training, or experience in the field of American history should include specific skills, abilities, talents, and credentials to support their applications. All candidates should submit any relevant information that demonstrates their qualifications to represent American history interests. The United States Mint is also interested in candidates who have demonstrated leadership skills, have received recognition by their peers in their field of interest, possess a record of participation in public service or activities, and are willing to commit the time and effort to participate in the Committee meetings and related activities.

Application Deadline: May 9, 2003.

Receipt of Applications: Any member of the public wishing to be considered for participation on the Committee should submit a resume, or letter describing qualifications for membership, by fax to 202–756–6539, or by mail to the United States Mint, 801 9th Street, NW., Washington, DC 20001, Attn: CCAC Membership. Submissions must be postmarked no later than May 9, 2003.

Dated: April 29, 2003.

Henrietta Holsman Fore,

Director, United States Mint.

[FR Doc. 03–10864 Filed 5–1–03; 8:45 am]

BILLING CODE 4810–37–P

DEPARTMENT OF VETERANS AFFAIRS

Capital Asset Realignment for Enhanced Services (CARES) Commission; Notice fo Meeting

The Department of Veterans Affairs (VA) gives notice under Public Law 92–463 (Federal Advisory Committee Act) that the Capital Asset Realignment for Enhanced Services (CARES) Commission will hold its fourth meeting on Tuesdays and Wednesday, May 13 and 14, 2003, at Sofitel Lafayette Square Hotel, 806 15th Street, NW., Washington, DC 20005. On May 13, the session will begin at 8:30 a.m. and end at 3 p.m. On May 14, the session will begin at 8:30 a.m. and end at 5 p.m. The meeting is open to the public.

The purpose of the Commission is to conduct an external assessment of VA's capital asset needs and to assure that stakeholder and beneficiary concerns are fully addressed. The Commission will consider recommendations prepared by VA's Under Secretary for Health, veterans service organizations, individual veterans, Congress, medical school affiliates, VA employees, local government entities, community groups and others. Following its assessment, the Commission will make specific recommendations to the Secretary of Veterans Affairs regarding the realignment and allocation of capital assets necessary to meet the demands for veterans health care services over the next 20 years.

On May 13, the Commission will decide whether the National CARES Planning Office reasonably adhered to uniform application of policy guidance and made consistent application of the data when establishing the Planning Initiatives. A status report on the review of the CARES Model will be presented and briefings will be provided on the potential impact of homeland security issues on VA health care delivery, and by representatives from the President's Task Froce to Improve Health Care Delivery for Our Nation's Veterans and the Office of Management and Budget.

On May 14, a summary of the staff review of Market Plans will be presented. Briefings will be provided on mental health care and on enhanced use of capital assets. A briefing will also be presented by a representative from the General Accounting Office.

No time will be allocated at this meeting for receiving oral presentations from the public. However, interested persons may either attend or file statements with the Commission. Written statements may be filed either before the meeting or within 10 days after the meeting, addressed to: Department of Veterans Affairs, CARES Commission (OOCARES), 810 Vermont Avenue, NW., Washington, DC 20420. Any member of the public wishing additional information should contact Mr. Richard E. Larson, Executive Director, CARES Commission, at the address above or at (202) 501–2000.

Dated: April 25, 2003.

By Direction of the Secretary.

E. Philip Riggin,

Committee Management Officer.

[FR Doc. 03–10858 Filed 5–1–03; 8:45 am]

BILLING CODE 8320–01–M

DEPARTMENT OF VETERANS AFFAIRS

Geriatrics and Gerontology Advisory Committee; Notice of Meeting

The Department of Veterans Affairs gives notice under Public Law 92–463 (Federal Advisory Committee Act) that a meeting of the Geriatrics and Gerontology Advisory Committee (GGAC) will be held on May 21–22, 2003, at the Department of Veterans Affairs Central Office, 811 Vermont Avenue, NW., Room 145, Washington, DC. The meeting will convene at 8:30 a.m. and conclude at 5 p.m. on May 21, and resume at 8:30 a.m. and conclude at noon on May 22, 2003. The meeting is open to the public.

The purpose of the Committee is to provide advice to the Secretary of Veterans Affairs and the Under Secretary for Health on all matters pertaining to geriatrics and gerontology by assessing the capability of VA health care facilities to meet the medical, psychological and social needs of older veterans and by evaluating VA facilities designated at Geriatric Research, Education and Clinical Centers (GRECCs).

On May 21, the topics to be presented and discussed include:

- Update on current issues of the Millennium Act.
- Update on VA's Aging Research Activities.
- Update on VA's Geriatrics Training Program.
- Site visits to GRECCs.
- Review draft Committee report on VA's Direction in Long-Term Care and GRECC Site Visits.

On May 22, the Committee receive briefings on VA's activities in Geriatrics and Extended Care and Vision for Geriatrics and Long-Term Care.

No time will be allocated at this meeting for receiving oral presentations from the public. Interested parties can provide written comments for review by the Committee in advance to the meeting to Ms. Marsha Goodwin, Chief, Geriatrics Programs (114), Department of Veterans Affairs, 810 Vermont Avenue, NW., Washington, DC 20420. Individuals who wish to attend the meeting should contact Ms. Jacqueline Holmes, Staff Assistant, Geriatrics and Extended Care Strategic Healthcare Group at (202) 273–8539.

Dated: April 25, 2003.

By Direction of the Secretary.

E. Philip Riggin,

Committee Management Officer.

[FR Doc. 03–10856 Filed 5–1–03; 8:45 am]

BILLING CODE 8320–01–M

DEPARTMENT OF VETERANS AFFAIRS

VA Vocational Rehabilitation and Employment Task Force; Notice of Meeting

The Department of Veterans Affairs (VA) gives notice under Public Law 92–463 (Federal Advisory Committee Act) that a meeting of the VA Vocational Rehabilitation and Employment (VR&E) Task Force will take place on Thursday, May 8, 2003, from 9 a.m. until 4:30 p.m. The meeting will be held at the Veterans Benefits Administration, 1800 G Street, NW., Conference Room 534, Washington, DC. The meeting is open to the public.

The purpose of the Task Force is to conduct an independent review of the VR&E Program within the Veterans Benefits Administration (VBA). The Task Force will provide recommendations to the Secretary of Veterans Affairs on improving the Department's ability to provide comprehensive services and assistance to veterans with service-connected disabilities and employment handicaps in becoming employable, and obtaining and maintaining suitable employment. The Task Force will also assess independent living services provided by VBA.

This will be the Task Force's initial meeting. Organizational business, to include briefings on ethics requirements and other administrative matters, will be conducted. The meeting's agenda will also include briefings and discussions on the manner in which vocational rehabilitation, independent living, and employment services are provided at VA.

No time will be allocated for receiving oral presentations from the public. Interested parties who wish to attend the meeting should have adequate identification for entry into the building and will be subject to a security screening process. Members of the public may submit written comments for review by the Committee to: Mr. John O'Hara, Executive Director, VA Vocational Rehabilitation and Employment Task Force, VA Office of Policy, Planning, and Preparedness (008B), 810 Vermont Avenue, NW., Washington, DC 20420. Mr. O'Hara can be reached at (202) 273–5130, fax number (202) 273–5991 and e-mail address *john.o'hara@mail.va.gov.*

Dated: April 25, 2003.

By Direction of the Secretary.

E. Philip Riggin,

Committee Management Officer.

[FR Doc. 03–10857 Filed 5–1–03; 8:45 am]

BILLING CODE 8320–01–M

Federal Register

Friday,
May 2, 2003

Part II

Department of Labor

Occupational Safety and Health Administration

29 CFR Part 1910

Walking and Working Surfaces; Personal Protective Equipment (Fall Protection Systems); Proposed Rule

DEPARTMENT OF LABOR

Occupational Safety and Health Administration

29 CFR Part 1910

[Docket S–029]

RIN 1218–AB80

Walking and Working Surfaces; Personal Protective Equipment (Fall Protection Systems)

AGENCY: Occupational Safety and Health Administration (OSHA), Labor.

ACTION: Notice of reopening of the rulemaking record; public comment period.

SUMMARY: OSHA is reopening the rulemaking record on the proposed revisions to Walking and Working Surfaces and Personal Protective Equipment (Fall Protection Systems) to gather data and information concerning advances in technology and industry practice and updated consensus standards issued since the proposals were published. OSHA also is seeking comments from interested persons on specific issues concerning each proposal. The Agency will be publishing, in the future, a revised economic analysis (containing a revised regulatory flexibility analysis if necessary) for public comment. After OSHA analyzes the record from the two reopenings, the Agency will determine what other steps, if any, are necessary to finalize the rulemakings on subparts D and I.

OSHA has included the regulatory text and appendices from the 1990 proposed rule as an appendix to this limited reopening notice. This appendix may serve as an aid for stakeholders who respond to questions in this limited reopening regarding issues referencing the 1990 proposed rule.

DATES: Written comments must be submitted by the following dates:

Hard copy: Your comments must be submitted (postmarked or sent) by July 31, 2003.

Facsimile and electronic transmissions: Your comments must be sent by July 31, 2003.

ADDRESSES: *Regular mail, express delivery, hand-delivery and messenger service:* You must submit three copies of your comments and attachments to the OSHA Docket Office, Docket No. S–029, Room N–2625, U.S. Department of Labor, 200 Constitution Avenue, NW., Washington, DC 20210; telephone (202) 693–2350 (OSHA's TTY number is (877) 889–5627). OSHA Docket Office and Department of Labor hours of operation are 8:15 a.m. to 4:45 p.m., EST.

Facsimile: If your comments, including any attachments, are 10 pages or fewer, you may fax them to the OSHA Docket Office at (202) 693–1648. You must include the docket number of this notice, Docket No. S–029, in your comments.

Electronic: You may submit comments but not attachments through the Internet at *http://ecomments.osha.gov.* (See the **SUPPLEMENTARY INFORMATION** section below for additional information on submitting comments.)

FOR FURTHER INFORMATION CONTACT: *General and technical information*—Mr. Terence Smith, OSHA, Directorate of Standards and Guidance, Room N–3609, U.S. Department of Labor, 200 Constitution Avenue, NW., Washington DC 20210; telephone (202) 693–2222.

For additional copies of this **Federal Register** notice, contact OSHA, Office of Publications, Room N–3101, U.S. Department of Labor, 200 Constitution Avenue, NW., Washington, DC 20210; telephone (202) 693–1888. Electronic copies of this **Federal Register** notice, as well as news releases and other relevant documents, are available at OSHA's Web page on the Internet at *http://www.osha.gov.*

SUPPLEMENTARY INFORMATION:

Table of Contents

I. Submission of Comments on This Notice and Internet Access to Comments and Submissions
II. Background
III. Need for Revisions to Subparts D and I
IV. Request for Comments, Data and Information
A. Subpart D
1. Rolling Stock and self-propelled, motorized mobile equipment
2. Qualified Climbers
3. Rung Width for Fixed Ladders
4. Hierarchy of Fall Protection Controls
5. Scaffolds and Controlled Descent Devices
6. Anchors for Suspended Work
B. Subpart I—Personal Protective Equipment for Fall Protection
1. General Fall Protection Requirement
2. Body Belts for Fall Arrest
3. Additional Proposed Amendments of General Industry Standards
C. Other Issues
1. New and Updated National Consensus Standards
2. Incorporation of Other Rulemaking Dockets
D. Updating Economic Analysis and Impact on Small Businesses
V. Authority and Signature

I. Submission of Comments on This Notice and Internet Access to Comments and Submissions

You may submit comments in response to this document by (1) hard copy, or (2) FAX transmission (facsimile), or (3) electronically through the OSHA Webpage. Please note that you cannot attach materials, such as studies or journal articles, to electronic comments. If you wish to submit additional materials, you must submit three hard copies of them to the OSHA Docket Office at the address above. The additional materials must clearly identify your electronic comments by name, date, subject and docket number so we can attach them to your comments.

Because of security-related problems there may be a significant delay in the receipt of comments by regular mail. Please contact the OSHA Docket Office at (202) 693–2350 (TTY (877) 889–5627) for information about security procedures concerning the delivery of materials by express delivery, hand delivery and messenger service.

All comments and submissions will be available for inspection and copying at the OSHA Docket Office at the address above. Comments and submissions posted on OSHA's Webpage are available at *http://www.osha.gov.* OSHA cautions you about submitting personal information such as social security numbers and birth dates. Contact the OSHA Docket Office at (202) 693–2350 (TTY (877) 889–5627) for information about materials not available through the OSHA Webpage and for assistance in using the Webpage to locate docket submissions.

II. Background

Subpart D of 29 CFR part 1910, Walking and Working Surfaces, sets forth general industry requirements for employers to protect employees from slips, trips and falls that may cause serious or fatal injuries. Subpart I of 29 CFR part 1910, Personal Protective Equipment, contains general requirements covering the use and maintenance of personal protective equipment (PPE), as well as specific provisions on the use, design and performance requirements for various types of PPE such as eye, face, head and respiratory protection.

The standards currently in subparts D and I were part of the initial package of standards OSHA promulgated in 1971 under section 6(a) of the Occupational Safety and Health Act of 1970 (the Act) (29 U.S.C. 655). Section 6(a) directed the Secretary, within two years of the

effective date of the Act, to adopt as OSHA safety and health standards any national consensus standards, and established Federal standards that were issued under other statutes.

Soon after OSHA adopted subpart D, the Agency initiated efforts to revise the standard. In September 1973, OSHA published a proposed revision of subpart D in the **Federal Register** (38 FR 24300, September 6, 1973). In April 1976, however, OSHA withdrew the 1973 proposal (41 FR 17227, April 23, 1976) because, in the Agency's view, it had become outdated and did not reflect current industry practices. Concurrently, OSHA published a notice requesting further information from interested parties about revising Subpart D (41 FR 17102, April 23, 1976). OSHA also conducted several informal public meetings to allow interested parties to present their views on issues related to subpart D. Based on the comments submitted in response to the notice and the public meetings, OSHA determined that a more thorough scientific and technical research effort was necessary to obtain objective information needed to develop a revised subpart D. Thereafter, OSHA accumulated a wide variety of technical information and studies from sources such as the National Bureau of Standards (now the National Institute of Standards and Technology) and the American National Standards Institute, which the Agency used to develop the proposed revisions to subparts D and I.

On April 10, 1990, OSHA published proposals for revising the standards for subparts D (55 FR 13360) and I (55 FR 13423). The two proposals were published together because of the interdependent nature of the hazards and working conditions they address. Proposed subpart D included, among other things, revised provisions for the use of personal fall protection systems while proposed subpart I added specific design and performance criteria that various personal fall protection systems, such as body belts and harnesses, would have to meet. OSHA received 788 comments on proposed subpart D and 56 on proposed subpart I during the comment period, including several requests for an informal public hearing.

On July 18, 1990, OSHA extended the comment period for written comments on the proposed standards until August 22, 1990, and scheduled an informal public hearing (55 FR 29224).

The informal public hearing was held on September 11–14, and 17–18, 1990, in Washington, DC. Fifty-one parties presented testimony, and fifty-nine post-hearing comments were received through December 1990.

The record was closed and certified on April 20, 1992.

A. Proposed Revisions of Subpart D

The proposed rule for subpart D updated many requirements in the existing standards and proposed changes to consolidate and simplify requirements and to eliminate ambiguities and redundancies. OSHA also proposed to add a number of provisions that were not addressed in the existing standards. For example, the proposal would have added provisions allowing employers to use alternative means to protect employees from fall hazards (*e.g.*, designated areas, personal fall protection equipment, safety nets) when guardrails and physical barriers are not feasible. The proposal also added provisions addressing walking and working surfaces such as step bolts, manhole steps and industrial truck platforms. In addition, OSHA proposed that the revised requirements would apply only prospectively, that is, the proposal would allow workplaces and equipment meeting existing subpart D requirements to be ''grandfathered in'' and limited application of the revised requirements to new installations and renovations.

B. Proposed Revisions of Subpart I

As noted above, subpart I contains general requirements to provide PPE as well as use, design and performance requirements for various types of PPE. Subpart I, however, currently does not contain specific design or performance requirements for personal fall protection systems.

OSHA proposed to add provisions to subpart I specifying the strength and performance requirements that all personal fall protection systems would have to meet whenever their use was required by a part 1910 standard. The proposal included design and performance criteria for several types of personal fall protection systems, including lifelines, lanyards, body belts and harnesses, work positioning systems (called ''positioning device systems'' in 1926 subpart M, Fall Protection in the Construction Industry), travel restricting systems and climbing device systems. In addition, OSHA proposed to add a non-mandatory appendix (Appendix C) to provide a number of test methods and procedures that employers and manufacturers could use to determine whether their systems were in compliance with the proposed design and performance requirements for fall protection systems. The primary purpose of the design criteria and test methods was to ensure that employers would use fall protection systems that are strong enough to provide the necessary fall protection, but that do not stop falls with a level of force that could exceed human injury tolerance and injure employees.

Other OSHA standards covering specific types of workplaces and equipment in general industry currently include provisions that require employers to provide personal fall protection systems (*e.g.* § 1910.66, Powered platforms for building maintenance; § 1910.67, Vehicle-mounted elevated and rotating work platforms; § 1910.261, Pulp, paper and paperboard mills; § 1910.268, Telecommunications). However, only § 1910.66 of the above standards includes requirements on the design and performance criteria for personal fall protection systems. The criteria in § 1910.66 only apply to personal fall protection systems required within that standard.

Two standards do contain criteria for fall protection equipment. The fall protection standards for the construction industry (subpart M of 29 CFR part 1926), finalized in 1994 (59 FR 40672, August 9, 1994), and the personal fall protection requirements for shipyard employment (29 CFR 1915.159), issued in 1996 (61 FR 26322, May 24, 1996), have design and performance criteria that are similar to those in proposed subpart I. OSHA also notes that both of these standards prohibit the use of body belts for fall arrest. OSHA will also review comments and information received in those rulemakings in determining how to proceed with the rulemakings on Walking and Working Surfaces and Personal Protective Equipment (Fall Protection Systems).

III. Need for Revisions to Subparts D and I

A review of the information, data and comments in the rulemaking record for subparts D and I as well as information OSHA has received since then, indicate that OSHA does need to revise the requirements in these subparts to address the significant hazards of slips, trips and falls to employees in general industry. Data in the record, as well as data received since the record closed in 1992, show that a significant number of accidents and fatalities in general industry are caused by slip, trip and fall hazards. For example, a 1982 study by the Bureau of Labor Statistics (BLS) showed that during a four-month period 938 employees were injured when they fell on stairs (Docket S–041; Ex. 2–37). The study was based on a review of workers' compensation data from 24 states. OSHA believes that the injury

total would have been significantly higher had data from all the states been included in the study. In 1984 and 1985, BLS reported that more than 300 workers died in fall-related accidents, which represented nine percent of all workplace deaths (Docket S–041; Ex. 2–19).

More recent publicly available data also confirm the need for revising subparts D and I. BLS data for 1999 show that employee falls resulted in 721 fatalities and 297,499 injuries involving lost workdays, and a fatality rate of 0.08 per 10,000 employees. BLS data for 2000 shows a slight increase in employee fall fatalities (734), also with a fatality rate of 0.08 per 10,000 employees. This represents a slight increase from the 1992 fatality rate of 0.06 derived from BLS data. A 2002 study by the Liberty Mutual Insurance Company found that falls to a lower level were the fourth leading cause of all workplace injuries, accounting for 9.2% of all workplace injuries and $3.7 billion in direct costs annually (Docket S–029; Ex. 1–17).

OSHA believes that revising the standards for subpart D and adding design and performance requirements for personal fall protection equipment in subpart I will substantially reduce the number of fatalities and injuries resulting from slip, trip and fall hazards.

IV. Request for Comments, Data and Information

Since publication of the proposed revisions to subparts D and I, many of the resource documents OSHA used to develop the proposed rules have been updated and industry practices and equipment design and performance have improved. OSHA believes that incorporating information and data about these changes and improvements into the revisions of subparts D and I will make the revised subparts more effective in protecting employees from the hazards of slips, trip and falls. Therefore, OSHA is reopening the rulemaking record to add this information and provide the public with an opportunity to review and comment on it.

At the same time, OSHA invites comment on a range of specific issues that are related to the proposed revisions. OSHA is particularly interested in receiving comments on the questions listed below. OSHA will carefully review and evaluate data, information and comments received in response to this notice in revising proposed subparts D and I.

As previously discussed, OSHA is using this limited reopening to supplement and update the existing rulemaking record for subparts D and I. There is a substantial public record on the proposed standards, including comments, public hearing proceedings, and post-hearing comments. This limited reopening will allow the public to update the record on a few key issues in the proposed rules, as well as to provide input for a revised economic analysis. When this revised analysis is completed, OSHA will reopen the record again to allow the public to comment on the revised analysis and the issues raised by proposed subparts D and I in light of the revised analysis. After that public comment period, OSHA will determine if any other steps are necessary, including issuance of a revised NPRM, before the Agency moves ahead with a final rule for these proposals.

To facilitate stakeholders responding to questions in this limited reopening regarding issues referencing the 1990 proposed rule, the regulatory text and appendices as proposed in 1990 have been included as an appendix to this reopening document.

A. Subpart D

1. Rolling Stock and Self Propelled, Motorized Mobile Equipment

OSHA is requesting additional comment on whether rolling stock and self-propelled, motorized mobile equipment should be covered or excluded from subpart D. Self-propelled, motorized mobile equipment includes tractor trailer trucks, tank trucks, hopper trucks and buses while rolling stock includes covered and uncovered rail cars, hopper cars, tank cars, and trailers.

Existing subpart D does not exclude such equipment from coverage and OSHA has issued citations for self-propelled, motorized mobile equipment under this subpart. In the proposed revision of subpart D, however, OSHA proposed to exclude surfaces that were an integral part of ''self-propelled, motorized mobile equipment'' other than platforms lifted by powered industrial trucks (§ 1910.21(a)(1), 55 FR 13396). In the preamble, OSHA said that employee exposure to these types of surfaces was usually brief and sporadic, such as performing periodic maintenance. In addition, there was concern that the surfaces did not contain anchorage points for attaching fall protection equipment.

The preamble also included examples of equipment that OSHA intended to exclude from coverage, but did not specify whether rolling stock were included in those examples (55 FR 13365). OSHA received comments saying that all rolling stock should be excluded from coverage (Docket S–041; Ex. 3–46).

An OSHA memorandum issued to its Regional Administrators on October 18, 1996, interpreted the proposal as excluding rolling stock from subpart D (Docket S–029; Ex. 1–16–2). In anticipation of a final revised rule, the memorandum directed OSHA inspectors not to cite rolling stock under subpart D. The memorandum also said it would not be appropriate to use the PPE standard (29 CFR 1910.132 (d)) to cite employee exposure to fall hazards on the tops of rolling stock, unless the rolling stock was positioned inside of or contiguous to a building or other structure where the installation of fall protection is feasible. The Agency is asking for additional comment on the following issues that relate to the appropriate scope of subpart D:

1. In your establishment and/or industry, how many or what percentage of employees working on top of rolling stock and/or self-propelled, motorized mobile equipment are exposed to fall hazards? How are these employees protected from fall hazards while working on such equipment? If fall protection equipment is used, please provide detailed information on the types and costs of the fall protection used on mobile equipment and please explain how it is used. If fall protection equipment is not used, please explain what technological and/or economic obstacles may be involved. Are there alternative means to protect employees from fall hazards while working on mobile equipment, including rolling stock? Please explain.

2. What is your safety experience with fall hazards on rolling stock and self-propelled, motorized mobile equipment?

3. Should OSHA exclude rolling stock and self-propelled motorized mobile equipment from coverage under subpart D? Please explain and provide data and information to support your comments.

2. Qualified Climbers

OSHA proposed to add a provision to subpart D that would allow employers to use ''qualified climbers,'' in certain limited situations, to climb fixed ladders that are not equipped with fall protection devices (*i.e.*, cages, wells or ladder safety devices) (§ 1910.23(a)(2), 55 FR 13398). The proposed provision would be an alternative to the existing subpart D requirement that fixed ladders more than 20 feet (6.1 m) high be equipped with such fall protection devices (§ 1910.27(d)). The proposed provision would allow qualified climbers to climb a ladder without fall

protection, provided that (1) the employer shows that the process of installing ladder safety devices, cages or wells on the fixed ladder would pose a greater hazard, and (2) the fixed ladder is climbed no more than twice per year (§ 1910.23(a)(2), 55 FR 13398). Once qualified climbers reach their work location, however, they must use fall protection.

In the proposal, OSHA defined as a qualified climber as ''[a]n employee who, by virtue of physical capabilities, training, work experience and job assignment, is authorized by the employer to routinely climb fixed ladders, step bolts or similar climbing devices attached to structures'' (§ 1910.21(b), 55 FR 13397).

OSHA recognizes that accidents involving ladders account for a significant number of workplace injuries and deaths. Indeed, OSHA estimated in its preliminary economic analysis that annually more than 10 percent of work surface injuries (11,025 injuries) and 19 percent of work surface deaths (25 deaths) involved ladders (55 FR 13390). Nonetheless, OSHA proposed the qualified climber alternative, in part, because the Agency believed that hundreds of thousands of fixed ladders were not equipped with the devices subpart D requires and were being climbed without fall protection of any kind. In the proposal, the Agency estimated that the cost of retrofitting all of these ladders to comply with subpart D could exceed $1.5 billion (55 FR 13360).

OSHA also proposed the qualified climber concept because the Agency believed that the process of installing, inspecting and maintaining cages, wells or ladder safety devices could, in some cases, substantially increase the period of employee exposure to fall hazards, as compared to the amount of time that qualified climbers would spend actually climbing ladders that did not have such devices.

OSHA is seeking comment on several issues concerning qualified climbers:

- The number of times a fixed ladder that is not equipped with fall protection (*i.e.*, personal fall protection systems, ladder safety devices, cages, or wells) should be allowed to be climbed in a year,
- Any environmental conditions in which qualified climbers should not be allowed to climb without using fall protection,
- Whether employers should be required to provide climbers with personal fall protection systems during training, and
- The use of other work practices and devices to protect qualified climbers from falling while climbing.

Current industry practice. As mentioned, the proposal for subpart D would allow qualified climbers to climb fixed ladders that are not equipped with fall protection on an infrequent basis. OSHA stated in the preamble that permitting employers to use qualified climbers who are physically fit and specially trained, would be an effective way to reduce the number of falls from these fixed ladders (55 FR 13388–89). OSHA issued a compliance directive, which explained the *de minimus* policy (OSHA Instruction CPL 2.103) (Docket S–029; Ex. 1–16). Under this policy, it would be considered a *de minimus* violation when an employer complied with a proposed standard rather than the standard in effect at the time of the inspection and the employer's actions clearly provided equal or greater employee protection. Employers who followed the proposed requirements in subpart D for qualified climbers would not be subject to citation under existing subpart D.

OSHA is interested in receiving comment on the extent to which fixed ladders are equipped with fall protection and the extent to which employers use qualified climbers.

4. In your establishment and/or industry, how many or what percentage of fixed ladders exceeding 20 feet (6.1 m) are equipped with ladder safety devices, cages, or wells? What technological and/or economic obstacles may be involved in equipping fixed ladders with cages, wells, or ladder safety devices?

5. In what percentage of climbs on fixed ladders are personal fall protection systems used? Where personal fall protection systems are used, how do climbers ''tie off'' to these ladders?

6. In your establishment and/or industry, to what extent (*e.g.*, what percentage) are climbs performed by qualified climbers, as defined above? How many or what percentage of their climbs are performed on fixed ladders that are not equipped with ladder safety devices, cages or wells? How many or what percentage of their climbs are performed without personal fall protection systems? What has been the safety experience in your establishment and/or industry using qualified climbers?

7. In your establishment and/or industry, what are the factors and/or rationale involved in the decision to use a qualified climber? Please explain and provide comment on both the risk-related and economic factors involved in this decision. Also, please comment on the extent to which any of the following factors are involved in this decision: height of ladder, frequency of climb, cost of installing and maintaining fall protection equipment, and cost of training qualified climbers.

8. If you use qualified climbers, has this practice resulted in safety or productivity benefits? Please explain and provide data and information about those benefits.

Number of climbs. The proposal for subpart D would allow employers to use qualified climbers, in lieu of equipping fixed ladders with fall protection, provided the ladder is climbed very infrequently (1910.23(a)(2); 55 FR 13398). OSHA proposed that employers be allowed to do so where the ladder is climbed no more than twice a year. In the preamble OSHA notes that some industries (*e.g.*, outdoor advertising) allowed those ladders to be climbed more frequently and OSHA said it was considering permitting those ladders to be climbed by qualified climbers up to 12 times year before employers would be required to equip the ladders with fall protection devices (55 FR 13364)). OSHA requested comment on whether the Agency should increase the number of climbs ladders that were not equipped with fall protection could be climbed by a qualified climber. Several commenters requested that OSHA allow ladders to be climbed up to six times per year before employers would be required to equip them with fall protection (Docket S–041, Exs. 3–412, 3–432, 10–6). They said six climbs would be in line with telecommunication industry practice. OSHA notes that the Electric Power Generation, Transmission and Distribution standard (Electric Power Generation standard), which was finalized after the proposal for subpart D was published, does not place a limit on the number of times that a structure can be climbed by a qualified climber without using fall protection (§ 1910.269(g)). Instead, the standard limits climbing without fall protection based on whether certain conditions such as ice, high winds, structure design, or contaminants are present that could cause employees to lose their grip or footing (59 FR 4320, 4373; Jan. 31, 1994).

In a related issue, some commenters urged OSHA to adopt a broader definition of what constitutes one ''climb.'' One commenter, for example, suggested defining one ''job'' as constituting one ''climb'' (Docket S–041, Tr. 9/17/90 pp. 1745–46). One job, however, could take days or weeks to complete and involve a large number of climbs. OSHA is considering whether to

define a single ''climb'' as any work activities at one fixed ladder location that take place within a 24-hour time period, regardless of the number of times the employee goes up and down the ladder in that time. Accordingly, a job started at 1 p.m., Monday and completed by 1 p.m., Tuesday, would count as one climb. Similarly, a job started at 1 p.m., Friday and completed by 1 p.m., Monday, would only count as one climb if Saturday and Sunday were non-workdays. OSHA solicits comment on the following issues:

9. In your establishment and/or industry, how many times or what percentages of total climbs are on fixed ladders that are not equipped with fall protection (*i.e.*, personal fall protection systems, ladder safety devices, cages or wells) during a year? What is the safety experience for such climbs in your establishment and/or industry?

10. What should be the maximum number of times that fixed ladders can be climbed without fall protection during a year? Please explain. How many or what percentage of climbs in your establishment and/or industry would be affected by changing the maximum number of times a ladder can be climbed without fall protection? Would that change significantly affect the costs of complying with proposed subpart D in your establishment and/or industry? Please provide estimates of the reductions in costs and an explanation of how those costs were derived.

11. Are there data and information on climbing injuries and fatalities to support increasing the number of times these ladders may be climbed during a year without equipping them with fall protection? Please explain and provide data and information.

12. Is there support for a definition of a single ''climb'' as all work activity and climbs on a single fixed ladder within a 24-hour period, regardless of the number times a qualified climber ascends and descends the ladder during that time period? Please explain and provide supporting materials.

13. Are there data and information on climbing injuries and fatalities that support the use of a 24-hour time period as constituting a single climb? Please explain and supply data and information.

Environmental conditions. An issue has been raised about the types of environmental conditions in which qualified climbers should not be allowed to climb without using fall protection. Neither existing nor proposed subpart D address this issue.

The Electric Power Generation standard, which also permits employers to use qualified employees to climb or change location on poles, towers, or similar structures without using fall arrest equipment, places restrictions on the type of environmental conditions employees can climb in without using fall protection (29 CFR 1910.269(g)(2)(v)). The standard specifies that qualified employees are not allowed to climb without fall arrest equipment where ''conditions, such as, but not limited to, ice, high winds * * * or the presence of contaminants on the structure, could cause the employee to lose his or her grip or footing'' (§ 1910.269(g)(2)(v)).

14. In your establishment and/or industry, in what types of environmental conditions do qualified climbers use personal fall protection equipment? What kinds of personal fall protection equipment do they typically use in those environmental conditions? What has been the safety experience in your establishment and/or industry with those practices?

15. Should OSHA include in subpart D a requirement similar to the one in the Electric Power Generation standard (§ 1910.269) prohibiting qualified climbers from climbing without fall protection equipment when environmental conditions are such that they could cause qualified climbers to lose their grip or footing? Please explain.

16. Should OSHA include a requirement prohibiting employees from climbing ladders in certain environmental conditions? Please explain. Under what environmental conditions should such requirements apply?

Safe work practices. Commenters suggested additional measures that could be implemented to protect qualified climbers. Gulf Power Company (Docket S–041; Ex. 3–83), for instance, urged OSHA to require qualified climbers have both hands free of tools or other objects when ascending or descending a ladder, which would ensure that climbers maintain three points of contact at all times when climbing.

The Electric Power Generation standard requires climbers to use fall protection if they are not able to hold onto the structure, for example, because they are carrying tools or other equipment in their hands. In the preamble to the final rule, OSHA said:

[C]limbing without the use of fall protection is only safe if the employee is using his or her hands to hold onto the structure while he or she is climbing * * * Climbing in this manner will enable the employee to hold onto the structure in case his or her foot slips. If the employee is not using his or her hands for additional support, he or she would be much more likely to fall as a result or a slip (55 FR 4374).

OSHA requests comments on the following issues:

17. What work practices, if any, have you instituted in your establishment and/or industry to protect qualified climbers during climbing? What has been the safety experience in your establishment and/or industry using those practices?

18. Should OSHA require that qualified climbers have both hands free of tools or objects when climbing? Please explain.

Resting capability. In the subpart D proposal, OSHA proposed requirements that would require employers to provide climbers with rest platforms during extremely long continuous climbs (§ 1910.23(c)(17), 55 FR 13399). The purpose of requiring rest platforms when continuous climbs are greater than 150 feet is to ensure that climbers do not become so fatigued that their safety becomes endangered.

Several commenters opposed the rest platform provision. One commenter (Docket S–041; Ex. 3–413) said that having rest platforms ''may create a more hazardous condition,'' especially if built on the outside of a telecommunication tower. The commenter also said that placing the platform inside the tower might restrict the climbing area. Two commenters suggested that OSHA permit the use of ladder safety devices, body belts, lanyards or other fall protection equipment as a reasonable alternative to installing rest platforms on ladders (Docket S–041; Exs. 3–83, 3–413). One of these commenters said that fall protection equipment provides greater protection than rest platforms because ''the climber can rest at any time and is not in danger of falling'' (Docket S–041, Ex. 3–83). The other commenter said that rest platforms might create hazardous conditions where, because of space restrictions, they have to be built on the outside face of a tower (Docket No. S–041, Ex. 3–413). The Agency believes that it may be appropriate to allow employers to comply with the requirement to provide resting capability by equipping climbers with a short positioning-type device or lanyard that meets the requirements of proposed subpart I. OSHA believes that the alternative resting devices also may provide additional advantages because they would enable employees to rest anywhere along the length of the climb instead of only at fixed rest platforms.

19. What is currently being done in your establishment and/or industry to

ensure that climbers are able to rest during long climbs? What is the safety experience in your establishment and/or industry using those practices? Would the use of platforms introduce new hazards in your establishment and/or industry?

20. Should OSHA allow climbers to use short lanyards to tie off and rest during climbing activities? Please explain.

21. If OSHA requires climbers to be equipped with lanyards for resting during climbs, is there additional need to have permanent rest platforms installed every 150 feet on ladders? Please explain and provide data and information to support your comments.

Fall protection during training. The proposal for subpart D would require qualified climbers to successfully complete a training or apprenticeship program that includes hands-on training (§ 1910.32(b)(5)(ii)). A proposed non-mandatory appendix also recommends that climbers use personal fall protection equipment while training Subpart D, Appendix A; 55 FR 13408, 13420). The Electric Power Generation standard requires that trainees use fall protection ''any time they are more than 4 feet (1.2 m) above the ground'' (§ 1910.269(g)(2)(v)). In a note to that provision, OSHA said that fall protection during training was necessary because employees still undergoing training were not yet considered ''qualified'' for purposes of being covered by the exception to using fall protection during climbing. The preamble to the Electric Power Generation final rule said:

> These employees would not be able to judge for themselves whether or not a safety strap should be used (and, in some cases, may not even be qualified in its use). Additionally, the record indicates that training and experience is one of the reasons a line worker can climb a pole or structure safely without fall protection * * * and that employees in training are at increased risk of injury due to falling (59 FR 4374).

OSHA believes that the reasoning in the Electric Power Generation standard supporting the use of fall protection during training of qualified persons also is applicable to the training of qualified climbers, and OSHA is considering whether to incorporate the language from Appendix A into the requirements of subpart D to further enhance employee safety.

22. In your establishment and/or industry, how are employees currently protected from falls while they are being trained to be qualified climbers? What is the safety experience in your establishment and/or industry using those practices?

23. Should OSHA require that employees always use fall protection equipment while being trained to be qualified climbers? Please explain.

24. Would a requirement to provide fall protection during training significantly affect costs, revenues or overall profitability in your establishment and/or industry? Please provide estimates of impacts on costs, revenues and/or profits and an explanation of how the estimates were derived.

25. How many and what percentage of employees at your establishment would be affected by adding such a requirement?

3. Rung Width on Fixed Ladders

Proposed subpart D carried over from the existing subpart a requirement that ladder rungs on fixed ladders have a minimum clear width of 16 inches (41 cm) (§ 1910.23(c)(9), 55 FR 13399). OSHA also proposed to replace the ladder requirements contained in the Telecommunications standard (§ 1910.268(h)) with a cross-reference to the revised ladder requirements of proposed subpart D (55 FR 13423). The existing Telecommunications standard requires a 12-inch (31 cm) minimum clearance width for rungs on fixed ladders. Commenters from the Telecommunications industry opposed the proposed revision, saying that telecommunications towers were highly specialized structures that do not have the space available for wider ladder rungs (Docket S–041, Ex. 3–116).

26. In the telecommunications industry, how many or what percentage of fixed ladders have rungs that are less than 16 (41 cm) wide? What has been the safety experience using these ladders?

27. At telecommunication centers and field installations, should OSHA continue to allow rungs on fixed ladders to have a minimum clearance width of 12 inches (31 cm)? Please explain and provide supporting data and information.

4. Hierarchy of Fall Protection Controls

Existing subpart D requires guardrails to protect employees from fall hazards (§ 1910.22(c)). However, because it may not be feasible to provide guardrails in all situations, OSHA proposed to establish a hierarchy of controls for protecting employees from fall hazards under subpart D (§ 1910.28(a)(1), 55 FR 13401). Under the proposal, guardrails would be required as the primary means of fall protection. However, other fall protection methods such as personal fall protection systems, hole covers and safety nets would be permitted where installing guardrails was infeasible. OSHA had proposed a similar provision in the 1973 proposed rule that was withdrawn. In 1978, OSHA issued a compliance directive, which is still in effect, allowing the use of alternate fall protection, which would include the use of personal fall protection, where the use of guardrails is not feasible (STD 1–1.7, October 30, 1978) (Docket S–029; Ex. 1–22).

The construction Fall Protection final rule did not have a hierarchy fall protection. The standard included a list of options any of which employers would be permitted to follow (51 FR 42718, November 25, 1986). For consistency between OSHA's construction standards and general industry standards, the Agency believes it would be appropriate to delete the hierarchy for fall protection controls in general industry. OSHA also notes that the fall protection requirements in a number of general industry standards do not establish a hierarchy of controls for protecting employees against fall hazards. See *e.g.*, § 1910.252, Welding, Cutting and Brazing General Requirements; § 1910.268, Telecommunications; § 1910.269, Electric Power Generation.

In light of this, OSHA is reconsidering whether to delete the proposed hierarchy from subpart D. OSHA recognizes that there may be many situations in which employers may find it preferable to provide guardrails. For example, if multiple employees are exposed to fall hazards on a regular basis, employers may find it is more efficient and cost-effective to install guardrails than to use personal fall protection systems.

28. Does your establishment and/or industry follow a hierarchy of controls for providing fall protection? If so, what is that hierarchy? If not, why? What is the safety experience in your establishment and/or industry using those practices?

29. In your establishment and/or industry, what types of fall protection are provided for employees?

30. Should OSHA include a provision on hierarchy of controls for fall protection in subpart D or allow employers to choose any type of fall protection in proposed § 1910.28 that the employer can demonstrate will be appropriate for the specific work location and activities being performed? Please explain. Are there certain situations in which employers should be required to follow the hierarchy of controls in protecting employees from fall hazards? Please explain and provide examples.

31. If OSHA were to eliminate the provision on hierarchy of fall protection controls, would this significantly affect the costs of complying with the proposed standard? Please provide estimates of reduction in costs to your establishment and/or industry and an explanation of how those costs were derived.

32. Please describe any changes to your fall protection program that your establishment and/or industry have implemented in the past 10 years. How many of or what percentage of employees have been affected by those changes? What was the impetus for those changes? Please describe any safety, technological, economic and potential regulatory factors that were involved in implementing those changes. For example, did any of the fall protection provisions proposed by OSHA for subparts D and I precipitate any changes to fall protection programs in your establishment and/or industry?

5. Scaffolds and Controlled Descent Devices

Existing subpart D addresses 20 different types of scaffolds, ranging from wood pole scaffolds to float scaffolds (§ 1910.28). Because many of these scaffolds are not typically used in general industry, the proposal for subpart D specifically addressed only the four types of scaffolds most commonly used:

- Two-point adjustable suspension scaffolds (swing stages) (§ 1910.30(d), 55 FR 13405);
- Single-point adjustable suspension scaffolds (§ 1910.30(e), 55 FR 13406);
- Mobile manually propelled scaffolds (§ 1910.30(f), 55 FR 13406); and
- Boatswains' chair (§ 1910.30(g), 55 FR 13406).

In the preamble, OSHA explained that the 16 other types of scaffolds not specifically addressed in subpart D would be required to meet the requirements of the scaffolding standards for the construction industry (29 CFR Part 1926, subpart L) (55 FR 13378). This approach, OSHA said, would ensure coverage of all scaffolds and at the same time simplify subpart D. OSHA also requested comments about whether these other types of scaffolds should be specifically addressed in subpart D.

Several commenters from the window cleaning industry said OSHA should consider controlled descent devices (CDD) to be scaffolds, and to include them in the scaffold section of subpart D (Docket S–041; Ex. 3–45; 3–412; 10–11). A CDD is a suspension-type device that usually supports one employee in a chair (seat board) and allows the user to descend in a controlled manner and to stop at desired points during the descent. The CDD is a variation of the single-point adjustable suspension scaffold, but generally only operates in a descending direction. Commenters said that CDDs are used in at least 60 percent of all high-rise window-cleaning operations and are not specifically covered in the scaffold standards for the construction industry (Docket S–041; Ex. 3–431).

In a March 12, 1991, memorandum to its Regional Administrators, OSHA stated that employers who use CDDs to perform building cleaning, inspection and maintenance must do so in accordance with the manufacturer's instructions, warnings, and design limitations. In addition, OSHA said it expected employers using CDDs to implement eight specific safety provisions covering the following areas: employee training, inspection of equipment, proper rigging, separate fall arrest systems, installation of lines, rescue, prevention of rope damage and stabilization (Docket S–029; Ex. 1–16–3). These eight provisions also are included in the current national consensus standard, ANSI I–14.1–2001—Window Cleaning Safety (Docket S–029; Ex. 1–13). The ANSI standard also limits the use of CDDs, which it refers to as rope descent systems (RDS), to window cleaning operations performed 300 feet (91 m) or less above grade, unless the windows cannot be safely and practicably accessed by other means such as powered platforms.

OSHA is considering adding provisions specifically addressing CDDs to subpart D. The OSHA memorandum has been in effect for more than a decade and OSHA is not aware of any fatalities involving CDDs when all eight of the safety provisions have been followed. In addition, the inclusion of the eight provisions in the ANSI standard on window cleaning indicates strong industry acceptance of these specific safety precautions.

33. In your establishment and/or industry, to what extent and in what operations are controlled descent devices being used? Please provide a detailed description of the technical, economic and safety factors that are considered in determining whether to deploy them. When controlled descent devices are used in your establishment and/or industry, are the eight safety provisions in the OSHA 1991 memorandum and ANSI I–14.1–201 being followed? If any are not being met, please explain why. What has been the safety experience in your establishment and/or industry using these devices?

34. Are controlled descent devices being used in operations performed more than 300 feet above grade? In what circumstances are controlled descent devices used above that height? Are additional safety measures used when operating at that height? Please explain. What has been the safety experience in your establishment and/or industry using the devices at that height?

35. Should OSHA include specific requirements for the use, installation and maintenance of controlled descent devices in the scaffold section of Subpart D? Please explain.

36. Should OSHA add to subpart D the eight safety provisions on the use of controlled descent devices discussed in the 1991 OSHA memorandum to Regional Administrators and included in ANSI I–14.1–2001? Please explain.

37. Should OSHA limit the use of controlled descent devices to operations performed no higher than 300 feet (91 m) above grade unless access cannot be attained safely and practicably by other means? What additional safety measures are needed for operations performed above 300 feet? Please explain.

38. Would limiting controlled descent devices to 300 feet impose added costs in your establishment and/or industry? If so, please provide estimates of the costs and an explanation of how those costs were derived.

39. How many or what percentage of jobs in your establishment or industry would be affected by such a requirement?

6. Anchors for Suspended Work

Proposed subpart D includes several provisions requiring that scaffolding and personal fall protection systems be secured to structures or buildings to prevent them from swaying or moving suddenly (§ 1910.28(c)(24)(vi), § 1910.28(c)(27)(ii), § 1910.28(d)(3), 55 FR 13405). For example, proposed subpart D requires personal fall protection systems used on single-level scaffolds and the top surface of multi-level scaffolds to be attached to a structure (anchorage point) other than the scaffold or scaffold suspension system (§ 1910.28(c)(27)(ii), 55 FR 13405). However, neither existing nor proposed subpart D address the installation and maintenance of the anchorages themselves on buildings or other structures.

In the hearing notice for proposed subpart D, OSHA requested comment on whether OSHA should add an installation and maintenance provision to subpart D for ''all structures where it is reasonably foreseeable that employees will need anchorage points'' to attach scaffolds and other equipment (55 FR

29224, 29227–28, July 18, 1990). OSHA raised this issue after IWCA and small window cleaning companies told OSHA that quite often there were no anchorage points on rooftops for attaching their lines. Since they did not own the building, they had no control over the presence or location of anchorage points. They urged OSHA to require building owners to install anchor points on rooftops or designate existing structural members that would be strong enough to serve as anchor points to attach scaffolds, control descent devices and safety lines (Docket S–041; Exs. 3–407, Tr. 9/11/90 pp. 311, 313, 330–31; Tr. 9/12/90 pp. 483–84, 503, 543–44, 565–66, 596–97, 629–30).

Building Owners and Managers Association International (BOMA), however, objected to requiring building owners to provide anchor points, stating that window cleaners were generally able to find supports on which to tie off (Docket S–041, Tr. 9/14/90 p. 1443). BOMA did agree that new buildings completed two to five years after the effective date of the final rule should be equipped with anchor points (Docket S–041, Ex. 75).

IWCA and BOMA participated on the ANSI committee that developed the new national consensus standard addressing safety in window cleaning operations discussed earlier (ANSI I–14.1–2001—Window Cleaning Safety) (Docket S–029, Ex. 1–13). The ANSI standard directs building owners to provide, identify, certify, inspect annually and maintain anchorages for window washing activities. The standard also states that its provisions should be implemented within five years of publication of the standard, which was October 25, 2001 (ANSI I–14.1–2001, Appendix A, section b).

OSHA believes that anchorage points are necessary to ensure that scaffolding and other equipment can be safely tied back for any type of suspended work, not just window cleaning. This will prevent an employee from being injured or killed due to sudden movement of the scaffold. The ideal solution is for anchorages to be installed and maintained as part of the regular schedule for renovating and inspecting commercial buildings (*e.g.*, rooftops). However, OSHA recognizes that many buildings may not currently have anchorages installed. Accordingly, the Agency seeks information on the following questions:

40. How many or what percentage of buildings are already equipped with anchorages to secure scaffolds, personal fall protection systems and controlled descent devices? What types of anchorages are present? Are there specific types of buildings that do not generally have anchorages installed? Please explain.

41. Where anchorages are present, are they available for use with all suspended work or only for window cleaning? Are building owners inspecting and maintaining the anchorages? Please explain. What coordination takes place between building owners and employers who need anchorages for their employees? Can employers consult with building owners and install their own anchorages on buildings to protect their employees?

42. How should OSHA ensure that needed anchorage points are present and adequately maintained on buildings where suspended work is performed? Should OSHA require employers to obtain information from the building owner about available anchorages that have been tested, inspected, and maintained consistent with this subpart? Should OSHA require employers to prohibit employees from doing any suspended work until they receive assurance from the building owner that such anchorages are present? Please explain.

43. How frequently are the exteriors of commercial buildings such as rooftops renovated?

44. What would be a reasonable phase-in time or delayed effective date for ensuring that employees involved with suspended work are protected by anchorages that comply with subpart D? Should this timeframe be different for newly constructed buildings than for existing buildings? Please explain.

45. What are the estimated per building costs to install, inspect and maintain anchors for suspended work? Please explain how the estimated costs were derived.

B. Subpart I—Personal Protective Equipment for Fall Protection

1. General Fall Protection Requirement

The proposal for subpart I sets forth design and performance criteria for personal fall protection equipment generally as well as for specific types of equipment (§§ 1910.128–131, 55 FR 13435–38). Proposed § 1910.128(a)(1) stated that these criteria would apply where personal fall protection is required by or referenced in another standard (*e.g.,* § 1910.67 Vehicle-mounted elevating and platform; § 1910.179 Overhead and gantry cranes; § 1910.128(a)(1), 55 FR 13425). Questions were raised about whether the language in paragraph (a)(1) of proposed § 1910.128 was intended to supersede the general requirement in subpart I for employers to provide personal protective equipment, including personal fall protection systems, to their employees ''whenever it is necessary by reason of hazards of processes or environment * * * encountered in a manner capable of causing injury or impairment in function'' (§ 1910.132(a)(1)).

OSHA has cited § 1910.132(a)(1) to enforce the use of personal fall protection equipment. This enforcement action has been upheld by the Occupational Safety and Health Review Commission. See, *e.g., Secretary of Labor* v. *Peavey Co.,* 16 O.S.H. Cas. (BNA) 2022 (Rev. Comm'n 1994); *Secretary of Labor* v. *Hackney,* 16 O.S.H. Cas. (BNA) 1806 (Rev. Comm'n. 1994). In addition, OSHA has applied the general duty clause, section 5(a)(1) of the Act, to enforce the use of personal fall protection where appropriate.

OSHA did not intend for § 1910.128 to supersede § 1910.132(a)(1) in any way. The Agency also did not intend for proposed § 1910.128 to supersede the fall protection provisions in other standards, requiring employers to use a different type of fall protection than those standards specify; for example, to require employers to use personal fall arrest systems when the standard requires guardrails. Instead, OSHA's intention was to tell employers that if a standard specifies or refers to a particular type of personal fall protection equipment, that equipment would now have to meet the design and performance criteria of subpart I.

OSHA is considering ways to resolve any confusion the proposed language may have inadvertently created. For example, OSHA is considering adding language to subpart I to emphasize that § 1910.128's general requirement for employers to provide personal protective equipment to protect employees against hazards includes protection against fall hazards. This is the approach used in the other specific PPE standards in subpart I. The standards on eye, face, head, respiratory and foot protection all contain language requiring their use when applicable hazards are present (§ 1910.133(a)(1), § 1910.134(a)(1), § 1910.135(a)(1), § 1910.136(a)(1)). A provision addressing fall protection, for instance, could require its use when applicable fall hazards are present, or, more specifically, when employees are exposed to fall hazards of 4 feet (1.2m) or more.

As an alternative, OSHA is considering adding language to subpart D (§ 1910.22, General requirements) that reinforces the employer's duty to provide employees with fall protection. Such a provision could cover all types

of fall protection, not just personal fall protection systems.

OSHA solicits comment on the following issues:

46. In your establishment and/or industry, when and in what situations are employees provided with fall protection? Is fall protection provided for working conditions and activities not covered by a specific OSHA standard? Please explain.

47. In your establishment and/or industry, to what extent is the fall protection provided already consistent with proposed subparts D and I? To the extent that fall protection is not consistent with the proposals, please explain whether and why you would have any difficulty coming into compliance. Please address any technological and/or economic obstacles that may be involved.

48. In your establishment and/or industry, how many or what percentage of employees require fall protection on a regular basis? How much of their work requires them to have fall protection? Please explain.

49. Should OSHA add language to Subpart I reinforcing employers' current obligation to provide fall protection whenever employees are exposed to any fall hazard of 4 feet (1.2 m) or more? Please explain.

2. Body Belts for Fall Arrest

In the proposal for subpart I, OSHA proposed to allow the use of body belts for fall arrest as long as the maximum arresting force on the falling employee is limited to 900 pounds (4 kN) (§ 1910.129, 55 FR 13437). However, during the 1990 public hearings, OSHA was made aware of technological improvements in personal fall arrest equipment and of an industry trend away from the use of body belts for fall arrest (Docket S–041, Tr. 9/11/90 pp. 203–9, 240–41; Tr. 9/17/90 p. 1716). A number of fall protection experts consider body belts to be less protective than full body harnesses when arresting a fall and during post-fall suspension (Docket S–057, Exs. 3–31B; Docket S–041, Tr. 9/11/90 pp. 218–19, 230–31). Studies show that body belts can cause significant injury when arresting a fall and may result in injury during post-fall suspension (Docket S–057; Exs. 2–14, 2–24, 2–25).

OSHA and other Federal standards promulgated after the subpart I proposal was published have prohibited or phased out the use of body belts for fall arrest (§ 1926.502, Fall Protection in the construction industry; 49 CFR 214.7 and 49 CFR 214.105, Federal Railroad Administration, Railroad Workplace Safety). OSHA's Fall Protection standard for the construction industry, finalized in 1994, prohibited the use of body belts for fall arrest after December 31, 1998. In the preamble to that rule, OSHA said evidence in the record (Docket S–206, Exs. 3–7, 3–9, 3–10) as well as the record for the Powered Platforms for Building Maintenance rulemaking (Docket S–700A, Exs. 11–3, 11–4, 11–5, 11–6; Tr. 2/21/86 p. 42) indicated that the concentration of the maximum arresting forces on the body, and the subsequent pressure from post-fall suspension, make body belts unsuitable for fall arrest purposes (59 FR 40672). OSHA also stated that ''* * * the evidence in the record clearly demonstrates that employees who fall while wearing a body belt are not afforded the level of protection they would be if the fall occurred while the employee was wearing a full body harness'' (59 FR 40703).

Last year the Federal Railroad Administration (FRA) issued an interim final rule prohibiting the use of body belts for fall arrest (49 CFR 214.7 and 49 CFR 214.105)(67 FR 1903, January 15, 2002). In the preamble to the rule, the FRA stated that ''it is now obvious that a formerly permitted use of body belts in fall arrest systems presents an undue hazard to the user''.

A 1992 ANSI national consensus standard on safety requirements for personal fall arrest systems declined to address the use of body belts for fall arrest (ANSI Z359.1–1992 (R1999)—Safety requirements for Personal Fall Arrest Systems, Subsystems and Components)(Docket S–029, Ex. 1–12).

While subpart Q, Welding, Cutting and Brazing, currently allows the use of body belts for fall arrest (§ 1910.252), OSHA believes it may be appropriate to prohibit body belts for fall arrest during welding, cutting and brazing operations.

In light of the recent information and regulatory action since proposed subpart I was published, OSHA is considering prohibiting the use of body belts as a personal fall arrest system and only permitting their use as part of a tether (restraint) or positioning system. The body of recent evidence indicates that using body belts for fall arrest may injure employees where strong fall arrest forces are involved, and that body harnesses are safer for employees. OSHA is requesting comment on this issue. OSHA also is requesting comment about whether there are certain unique situations in which body belts should continue to be allowed to be used for fall arrest, and whether it is appropriate to prohibit body belts for fall arrest during welding, cutting and brazing operations.

50. To what extent are body belts used in a personal fall arrest system in your establishment and/or industry? What has been the safety experience in your establishment and/or industry using body belts?

51. To what extent are body harnesses and other restraints being used in place of body belts in your establishment and/or industry? What types of harnesses and restraints are being used? What has been the safety experience in your establishment and/or industry using those types of equipment? Please provide data and comment on the extent to which body harnesses prevent death or injury or reduce the severity of injury.

52. In welding, cutting and brazing operations at your establishment and/or in your industry, what types of personal fall protection are being used? Are body belts being used for fall arrest in those operations? What has been the safety experience in your establishment and/or industry using those types of fall protection?

53. Should OSHA prohibit the use of body belts as part of a personal fall arrest system? Please explain. For how many or what percentage of employees would you need to replace body belts with body harnesses in your establishment or industry?

54. Are there unique situations or work activities where body belts are necessary or preferable to body harnesses, and provide the degree of safety needed against fall hazards? Please provide data and information to support your comments.

55. What are the differences in purchase price, maintenance costs and useful life, if any, between body belts and body harnesses? Please provide cost estimates and an explanation of how those were derived. To what extent, if any, does the use of body harnesses in lieu of body belts affect productivity?

56. To what extent would you and employers in your industry incur significant costs switching from body belts to body harnesses or other types of personal fall arrest systems? Please provide detailed information about the types of costs that would be incurred and an explanation of how those costs were derived.

3. Additional Proposed Amendments to General Industry Standards

In the proposal for subpart D, OSHA proposed to update fall protection provisions in several general industry standards so they would meet the proposed design and performance criteria for personal fall protection in subpart I (§ 1910.67, Vehicle-mounted elevating and rotating work platforms;

§ 1910.261, Pulp, paper and paperboard mills; § 1910.268, Telecommunications). The purpose of the proposed amendments was to ensure that all fall protection systems employers provided would meet appropriate standards for performance and strength. OSHA had found that many of the standards did not have design and performance criteria for the fall protection, had outdated criteria or had criteria that allowed the use of body belts for fall arrest.

After the proposal for subpart I was published, OSHA was made aware of other general industry standards where fall hazards were not specifically addressed, where fall protection criteria appear to conflict with proposed subpart I, or where body belts appeared to be permitted for fall arrest. The Powered Industrial Trucks standard, for example, does not include fall protection requirements for employees working on elevated platforms even though those employees are clearly exposed to a fall hazard (§ 1910.178). OSHA seeks comment on the following issues:

57. In your establishment and/or industry, to what extent is fall protection provided for employees working on elevated platforms of powered industrial trucks? What types of fall protection are provided? What has been the safety experience in your establishment and/or industry using those types of fall protection?

58. In welding, cutting and brazing operations at your establishment and/or in your industry, what types of personal fall protection are being used? Are body belts being used for fall arrest in those operations? What has been the safety experience in your establishment and/or industry using those types of fall protection?

59. Should OSHA change the personal fall protection requirements in all of its general industry standards so they meet the personal fall protection requirements in proposed subpart I? Please explain.

C. Other Issues

1. New and Updated National Consensus Standards

Many employers as well as OSHA use the latest versions of national consensus standards for guidance and as references in creating safe workplaces. Indeed, § 6(b)(8) of the Act requires that OSHA whenever the Agency issues a standard that differs substantially from an existing consensus standard it must publish a statement of reasons why the OSHA standard as adopted will better effectuate the purposes of the Act than the consensus standard (29 U.S.C. 655(b)(8)).

In proposed § 1910.23, OSHA said that ladders employers used would be considered to be in compliance with the standard if they were designed in accordance with specific 1982 ANSI standards for ladders (ANSI A14.1–1982–American National Standard for Ladders-Wood-Safety Requirements; ANSI A14.2–1982–American National Standard for Ladders-Portable Metal-Safety Requirements; ANSI A14.5–1982–American National Standard for Ladders-Portable Reinforced Plastics-Safety Requirements)(§ 1910.23(c)(2), 55 FR 13398). Since the proposal for subpart D was published, these ANSI standards have been amended or reaffirmed (ANSI A14.1–2000, ANSI A14.2–2000, ANSI A14.5–2000). OSHA is adding these updated standards to the rulemaking record and is considering revising proposed § 1910.23(c)(2) to incorporate by reference the updated ANSI standards. OSHA requests comment on incorporating the latest ANSI standards in § 1910.23(c)(2).

In addition, a number of other national consensus standards relating to fall protection and fall protection systems have been updated and new ones have been developed (*e.g.,* ANSI/IWCA I–14.1–2001–Window Cleaning Safety) since proposed subpart D was published. These consensus standards cover a wide range of issues involved in these rulemakings and, in general, represent industry best practices in protecting employees from fall hazards. In addition, many provide detailed explanations on the rationale behind their requirements. OSHA requests comment about how the Agency can make best use of these consensus standards in developing final standards for subparts D and I.

OSHA is adding the following national consensus standards to the rulemaking record on subparts D and I:

ANSI A10.8–2001—Safety Requirements for Scaffolding—American National Standard for Construction and Demolition Operations. (Docket S–029; Ex. 1–1),

ANSI A14.1–2000—American National Standard for Ladders—Wood—Safety Requirements. (Docket S–029; Ex. 1–2),

ANSI A14.2 2000—American National Standard for Ladders—Portable Metal—Safety Requirements. (Docket S–029; Ex. 1–3),

ANSI A14.3–1992—American National Standard for Ladders—Fixed—Safety Requirements. (Docket S–029; Ex. 1–4),

ANSI A14.4–2002—American National Standard—Safety Requirements for Job-Made Wooden Ladders. (Docket S–029; Ex. 1–5),

ANSI A14.5–2000—American National Standard for Ladders—Portable Reinforced Plastic—Safety Requirements. (Docket S–029; Ex. 1–6),

ANSI A14.7–2000—American National Standard for Mobile Ladder Stands and Mobile Ladder Stand Platforms. (Docket S–029; Ex. 1–7),

ANSI A14.10–2000—American National Standard for Ladders—Portable Special Duty Ladders. (Docket S–029; Ex. 1–8),

ANSI A92.3–1990—American National Standard for Manually Propelled Elevating Aerial Platforms. (Docket S–029; Ex. 1–9),

ANSI A1264.1–1995 (R2002)—American National Standard—Safety Requirements for Workplace Floors and Wall Openings, Stairs and Railing Systems. (Docket S–029; Ex. 1–10),

ANSI A1264.2–2001—American National Standard—Standard for the Provision of Slip Resistance on Walking/Working Surfaces. (Docket S–029; Ex. 1–11),

ANSI/IWCA I–14.1–2001—Window Cleaning Safety. (Docket S–029; Ex. 1–13)

ANSI Z359.1–1992 (R1999)—Safety Requirements for Personal Fall Arrest Systems, Subsystems and Components. (Docket S–029; Ex. 1–12),

ASME B56.1–2000—Safety Standard for Low Lift and High Lift Trucks. (Docket S–029; Ex. 1–14), and

ASME C478–97—Standard Specification for Precast Reinforced Concrete Manhole Sections. (Docket S–029; Ex. 1–15).

OSHA is also requesting comment about other national consensus standards that the Agency should consider adding to the record in these rulemakings.

2. Incorporation of Other Rulemaking Dockets

As discussed above, OSHA believes that information in other OSHA rulemaking records is relevant to the rulemakings on subparts D and I. Many commenters also have drawn upon data and information in other OSHA dockets. OSHA has identified the following rulemaking dockets that it intends to incorporate into the rulemaking records for subparts D and I:

- Docket S–041 Walking and Working Surfaces (proposed April 10, 1990, 55 FR 13360),
- Docket S–057 Personal Protective Equipment (Fall Protection) (proposed April 10, 1990, 55 FR 13360),
- Docket S–045 Personal Protective Equipment for Shipyard Employment (proposed November 29, 1988, 53 FR

48092, final rule published May 24, 1996, 61 FR 26322),

• Docket S–700A Powered Platforms for Building Maintenance (proposed January 22, 1985, 50 FR 2890, final rule published July 28, 1989, 54 FR 31408),

• Docket S–206 Fall Protection in the Construction Industry (proposed November 25, 1986, 51 FR 42718, final rule published August 9, 1994, 59 FR 40672),

• Docket S–015 Electric Power Generation, Transmission and Distribution (proposed January 31, 1989, 54 FR 4974, final rule published , January 31, 1994, 59 FR 4320), and

• Docket S–775 Safety Standards for Steel Erection (proposed January 26, 1988, 53 FR 2048, final rule published January 18, 2001 66 FR 5196).

The Agency is requesting comment about other OSHA rulemaking records that should be incorporated by reference into the record for these rulemakings.

D. Updating Economic Analysis and Small Business Impacts

In order to develop final standards for subparts D and I, OSHA will need to update and revise its economic analysis. The questions above and those following are designed to aid OSHA in updating its analysis of the provisions of the proposed rules and to assist OSHA in evaluating possible revisions or amendments. The economic analysis for the proposals on subparts D and I certified that the proposed rules would not result in a significant impact on a substantial number of small entities.

Under the Regulatory Flexibility Act (5 U.S.C. 601 *et seq.*), OSHA is required to assess the impact of proposed and final rules on small entities. OSHA requests that members of the small business community, or other parties familiar with regulation of small business, provide comment on whether the proposed revisions to subparts D and I would have a significant impact on a significant number of small entities.

60. How many and what kinds of small businesses or other small entities in your industry could be affected by revising the fall protection provisions in subparts D and I? Describe any such effects. Where possible, please provide detailed descriptions of the size and scope of operation for affected small entities and the likely technical, economic and safety impacts for those entities.

61. Are there special issues that make control of fall hazards more difficult in small firms?

62. Are there any reasons that the benefits of reducing exposure to fall hazards might be different in small firms than in larger firms? With regard to potential impacts on small firms, please describe specific concerns that should be addressed. Please describe alternatives that might serve to minimize these impacts while meeting the requirements of the OSH Act.

Since the proposals were published, the Small Business Regulatory Enforcement Fairness Act of 1996 (SBREFA) (5 U.S.C. 609(b)) went into effect. SBREFA requires that OSHA proposed rules that may have significant impacts on small entities be reviewed by Small Business Advocacy Panels prior to being published. OSHA requests comments about whether the proposed revisions for subparts D and I will have a significant effect on a substantial number of small entities.

V. Authority and Signature

This document was prepared under the direction of John L. Henshaw, Assistant Secretary of Labor for Occupational Safety and Health, U.S. Department of Labor, 200 Constitution Avenue, NW., Washington, DC 20210. It is issued under sections 4, 6 and 8 of the Occupational Safety and Health Act of 1970 (29 U.S.C. 653, 655, 657), Secretary of Labor's Order No. 5–2002 (67 FR 65008) and 29 CFR part 1911.

Signed at Washington, DC, this 25th day of April, 2003.

John L. Henshaw,

Assistant Secretary of Labor.

Appendix—1990 Proposed Standard and Appendices

OSHA has included the regulatory text and appendices from the April 10, 1990 proposed rule (55 FR 13396) as an appendix to this limited reopening notice. This appendix may serve as an aid for stakeholders who respond to questions in this limited reopening regarding issues referencing the 1990 proposed rule.

PART 1910—OCCUPATIONAL SAFETY AND HEALTH STANDARDS

1. The authority citation for subpart D of part 1910 is proposed to be revised as follows:

Authority: Secs. 4, 6 and 8 of the Occupational Safety and Health Act of 1970 (29 U.S.C. 653, 655, 657), Secretary of Labor's Order No. 12–71 (36 FR 8754), 8–76 (41 FR 25059), and 9–83 (48 FR 35736) or 1–90 (55 FR 9033), as applicable. Subpart D is also issued under 29 CFR part 1911.

2. In subpart D, §§ 1910.21 through .32 would be revised, and Appendices A, B, and C would be added to read as follows:

Subpart D—Walking-Working Surfaces

Sec.
1910.21 Scope, application and definitions.
1910.22 General requirements.
1910.23 Ladders.
1910.24 Step bolts and manhole steps.
1910.25 Stairs.
1910.26 Ramps and bridging devices.
1910.27 Work surfaces.
1910.28 Fall protection systems.
1910.29 Wall openings.
1910.30 Scaffolds.
1910.31 Mobile elevating work platforms, mobile ladder stands and powered industrial truck platforms.
1910.32 Special surfaces.
Appendix A—Compliance Guidelines.
Appendix B—National Consensus Standards.
Appendix C—References for Further Information.

Subpart D—Walking and Working Surfaces

§ 1910.21 Scope, application and definitions.

(a) *Scope and application.* This subpart covers all walking and working surfaces that are used by employees, except as follows:

(1) This subpart does not apply to surfaces that are an integral part of self-propelled, motorized mobile equipment, other than platforms hoisted or lifted by powered industrial lift trucks which are covered by paragraph (e) of § 1910.31.

(2) This subpart does not apply to powered exterior building maintenance platforms covered in subpart F of Part 1910.

(3) This subpart does not cover fall hazards from the exposed perimeters of entertainment stage, rail station platforms.

(b) *Definitions.*

''Allowable unit stress'' means the maximum stress allowed to be applied as specified by recognized national codes and standards such as the American Society of Testing and Materials (ASTM), and the National Fire Protection Association (NFPA).

''Alternating tread stairs'' means a series of steps usually attached to a center support rail in an alternating manner so that a user of the stairs normally does not have both feet on the same level.

''Authorized person'' means an employee who, due to the requirements of work duties, is authorized by the employer to be present in a particular work area.

''Boatswain's chair'' means a single-point adjustable suspension scaffold consisting of a seat or sling designed to accommodate one employee in a sitting position.

''Body belt'' (safety belt) means a strap with means for securing it around the waist or body and for attaching it to a lanyard, lifeline, or deceleration device.

''Body harness'' means a design of straps which is secured about the employee in a manner so as to distribute the arresting forces over at least the thighs, shoulders, and pelvis, with provisions for attaching a lanyard, lifeline, or deceleration device.

''Bridging device'' means a surface used to span the gap between a loading dock and a vehicle or between vehicles. It may be fixed or portable, adjustable, powered or unpowered. It may also be referred to as a car plate or dockboard.

''Combination ladder'' means a portable ladder capable of being used as a stepladder or as a single or extension ladder. It may also

be capable of being used as a trestle ladder or a stairwell ladder. Its components may be used as single ladders.

''Design factor'' means the ratio of the ultimate failure strength of a member or piece of material or equipment to the actual working stress or intended safe load.

''Designated area'' means a space which has a perimeter barrier erected to warn employees when they approach an unprotected side or edge, and serves also to designate an area where work may be performed without additional fall protection.

''Equivalent'' means alternate designs, materials, or methods which the employer can demonstrate will provide an equal or greater degree of safety for employees than the method or item specified in the standard.

''Failure'' means a load refusal, breakage, or separation of component parts. Load refusal is the point where the ultimate strength is exceeded.

''Fall'' or ''fall hazard'' means the act or circumstances that could result in the possibility of slipping or tripping on or falling off a surface.

''Fixed ladder'' means a ladder, including individual rung ladders, that is permanently attached to a structure, building, or equipment. It does not include ship's stairs or manhole steps.

''Guardrail system'' means a vertical barrier, normally consisting of, but not limited to, an assembly of toprails, midrails, and posts, erected to prevent employees from falling to lower levels.

''Handrail'' means a rail used to provide employees a handhold for support.

''Hole'' means an opening more than two inches (5.1 cm) in its least dimension in a floor, roof, or other surface.

''Individual rung ladder'' means a ladder consisting of rungs individually attached to a structure, building, or piece of equipment. It does not include manhole steps installed in manholes.

''Ladder'' means a device typically used to gain access to a different elevation consisting of two or more structural members crossed by rungs, steps, or cleats.

''Ladder cage'' means a barrier surrounding or nearly surrounding the climbing area of a ladder. It fastens to the ladder's side rails, to one side rail, or to other structures.

''Ladder safety device'' means a support system which will stop or limit the speed of an employee's fall from a ladder.

''Lean-to scaffold'' means a supported scaffold which is kept erect by tilting it toward and resting it against a building or structure.

''Lower level'' means those areas to which an employee could fall. Such areas include ground levels, floors, roofs, ramps, runways, excavations, pits, tanks, materials, water, equipment, and similar surfaces.

''Manhole'' means an access through which an employee gains entry to a work area or to equipment below a surface or behind a vertical partition such as a vessel wall.

''Manhole steps'' means a series of steps individually attached or set into the walls of a manhole structure. They are not considered to be an individual rung ladder.

''Manually propelled elevating work platform'' means a vertically adjustable work platform which may be towed, skidded or manually moved horizontally or the base structure may remain stationary.

''Manway'' means an opening through which employees access vessels and equipment.

''Maximum intended load'' means the total load of all employees, equipment, tools, materials, transmitted loads, wind loads and other loads reasonably anticipated to be applied.

''Midrail'' means the rail located approximately midway between the top rail and the toeboard or work surface of a guardrail system.

''Mobile elevating work platform'' means a portable platform that can be elevated and moved about on wheels or casters.

''Mobile ladder stand'' means a mobile fixed-size self-supporting ladder consisting of a wide flat tread ladder in the form of stairs. The assembly may include handrails, guardrails and toeboards. It may also be referred to as a ladder stand.

''Mobile scaffold'' means a portable caster or wheel-mounted supported scaffold. It may also be referred to as a mobile work platform.

''Platform'' means a work surface elevated above the surrounding work area.

''Platform unit'' means the individual wood planks, fabricated planks, fabricated decks, and fabricated platforms such as ladder-type and light metal-type, which comprise the platforms and walkways of a scaffold.

''Portable ladder'' means a ladder that can readily be moved or carried, usually consisting of side rails joined at intervals by steps, rungs, cleats, or rear braces.

''Qualified climber'' means an employee who, by virture of physical capabilities, training, work experience and job assignment, is authorized by the employer to routinely climb fixed ladders, step bolts or similar climbing devices attached to structures.

''Qualified person'' means an person designated by the employer who is knowledgeable about and familiar with all relevant manufacturers' specifications and recommendations; is capable of identifying existing or potential hazards in specific surroundings or working conditions which may be hazardous or dangerous to employees; and has been trained for the specific task assigned. When work is to be supervised by a qualified person, the qualified person shall have the necessary authority to carry out the assigned work responsibilities.

''Ramp'' means an inclined surface between different elevations for the passage of employees, vehicles, or both.

''Riser'' means the upright member of a step situated at the back of a lower tread and near the leading edge of the next higher tread.

''Safety net'' means a non-rigid barrier supported in such a manner as to catch employees who have fallen off a work surface and bring them to a stop before contacting surfaces or structures below the net which might otherwise injure them.

''Scaffold'' means any temporary elevated or suspended platform, and its supporting structure, used for supporting employees or materials or both, except this term does not include crane or derrick suspended personnel platforms.

''Ship's stairs'' means a stairway equipped with treads and stair rails with a slope greater than 50 degrees from the horizontal. It is sometimes referred to as a ''ship's ladder.''

''Shore scaffold'' means a supported scaffold which is kept erect by placing it against a building or structure and holding it in place with props.

''Single-point adjustable suspension scaffold'' means a suspension scaffold consisting of a platform suspended by one rope from an overhead support and equipped with means to permit the movement of the platform to desired work levels.

''Slip-resistant surface'' means a surface that is capable of resisting the sliding motion on the contact surface of an object or an employee's shoe or foot.

''Spiral stairway'' means a stairway having a spiral structure attached to a supporting column.

''Stair'' means a series of steps used to ascend or descend between levels, and having four or more risers installed at an angle equal to or less than 50 degrees from the horizontal.

''Stair rail'' or ''stair rail system'' means a vertical barrier erected along the open-side of a stairway to prevent employees from falling to lower levels. The top surface of a stair rail system may also be a handrail.

''Step'' means any combination of risers and treads which may be part of a stair.

''Step ladder'' means a self-supporting portable ladder, non-adjustable in length, with flat steps and a hinged back.

''Step-bolt'' means a bolt or rung attached at intervals along a structural member and used for foot placement during climbing or standing. Step bolts may also be called ''pole steps.''

''Structurally supported'' means supported by structural components such as pillars, piers, lintels, beams and joists. It does not include slabs or floors placed on a grade.

''Tieback'' means an attachment from a structural member to a supporting device.

''Toeboard'' means a low protective barrier placed to prevent the fall of materials to a lower level, or when used without a guardrail, to prevent an employee's feet from slipping over the edge of a surface.

''Tread'' means the horizontal member of a step.

''Two-point suspension scaffold'' (swing stage) means a suspension scaffold consisting of a platform supported by hangers (stirrups) suspended by two ropes from overhead supports and equipped with means to permit the raising and lowering of the platform to desired work levels.

''Ultimate failure'' means the collapse of the structure or, where applicable, a component thereof.

''Unprotected sides and edges'' means any side or edge of a surface, except at entrances to points of access, where there is no wall or guardrail system.

''Walking and working surface'' means any surface, within the scope of this standard, on which employees perform or gain access to their job duties or upon which employees are required or allowed to walk or work while performing assigned tasks.

''Wall opening'' means an opening at least 30 inches (76 cm) high and l8 inches (46 cm) wide in any wall or partition through which employees can fall to a lower level.

§ 1910.22 General requirements.

(a) *Surface conditions and clearances.* (1) Surfaces shall be designed, constructed and maintained free of recognized hazards that can result in death or serious injury to employees.

(2) When surfaces cannot be maintained free of hazards, such as snow, ice or oil, that can result in death or serious injury to employees, employees shall be provided with a means to avoid or minimize their exposure to them.

(3) A minimum free clearance of 18 inches (46 cm) shall be provided for employee passage around or between obstructions.

(4) Manways or manholes built on or after (*insert date one year after effective date of the final rule in the* **Federal Register**) leading to sewers, non-pressurized tanks, atmospheric vessels and enclosures, and other confined spaces shall be at least 24 inches (61 cm) in diameter.

(b) *Application of loads.* (1) All surfaces shall be designed, constructed and maintained to support their maximum intended load. The maximum intended load shall not be exceeded.

(2) The employer shall ensure that employees involved in warehousing or storage activities know the intended load limits for structurally supported surfaces in the areas where they work.

(c) *Access and egress.* The employer shall ensure that employees are provided with and use a safe means of access to, and egress from, one surface to another.

(d) *Inspection, maintenance, and repair.* (1) The employer shall ensure through regular and periodic inspection and maintenance that walking and working surfaces are in safe condition for employee use.

(2) The employer shall ensure that all hazardous conditions which are discovered are corrected, repaired, or temporarily guarded to prevent employee use. Repairs shall be made in a manner that will restore the walking and working surface to a safe condition for employee use.

(3) Only qualified persons shall be permitted to inspect, maintain or repair walking and working surfaces except for the incidental cleanup of non-toxic materials.

§ 1910.23 Ladders.

(a) *Scope and application.* This section covers all ladders, except that:

(1) This section does not apply to ladders which are used only for firefighting or rescue operations, or to those ladders which form an integral part of machinery; and

(2) Fixed ladders that are used only by qualified climbers, as defined in § 1910.32(b)(5), are not required to be equipped with ladder safety devices, wells or cages, provided the following requirements are met:

(i) The installation and maintenance of the ladder safety devices, wells or cages present a greater hazard than having a qualified climber use a fixed ladder without this protection.

(ii) The ladder is climbed two or fewer times per year.

(b) *General requirements.* (1) Employers shall ensure that all employees who use ladders with a working height of six feet (1.82 m) or more receive the necessary training, such as how to inspect ladders, and use such ladders properly.

(2) Ladders shall be used only for the purposes for which they were designed.

(3) Non-self-supporting ladders shall be used at an angle such that the horizontal distance from the top support to the foot of the ladder is approximately one-fourth of the working length of the ladder (the distance along the ladder between the foot and top support).

(4) When ladders are used for access to an upper landing surface, the ladder siderails shall extend at least three feet (.9 m) above the upper landing surface to which the ladder is used to gain access; or, when such an extension is not possible because of the ladder's length, the ladder shall be secured at the top and a grasping device, such as a grabrail, shall be provided to assist employees in mounting and dismounting the ladder.

(5) Ladders shall be used only on stable and level surfaces unless secured to prevent their accidental displacement. Non-self-supporting ladders shall not be used on slippery surfaces unless secured or provided with slip-resistant feet to prevent accidental displacement.

(6) Single rail ladders shall not be used.

(7) Ladders shall not be moved, shifted or extended while occupied by employees.

(8) Ladders placed in any location where they can be displaced by other activities or traffic, such as in passageways, doorways, or driveways, shall be secured to prevent accidental displacement, or a barricade shall be used to keep the activities or traffic away from the ladder.

(9) Ladders with structural or other defects shall be immediately tagged with a danger tag reading ''Out of Service,'' ''Do Not Use,'' or similar legend in accordance with § 1910.145, and shall be withdrawn from service until repaired.

(10) All ladder repairs shall be made by a qualified person trained and familiar with the design and the proper procedures for repairing defective components.

(11) Ladders shall be inspected for visible defects prior to the first use each workshift, and after any occurrence which could affect their safe use.

(12) The top of a non-self-supporting ladder shall be placed with the two rails supported unless it is equipped with a single support attachment.

(13) Emergency escape ladders shall comply with all applicable requirements of this section except those requiring fall protection systems.

(14) The top of a stepladder shall not be used as a step.

(c) *Design, construction, maintenance and inspection.*

(1) Portable ladders shall be capable of supporting, without ultimate failure, the following loads:

(i) Each non-self-supporting ladder: At least four times the maximum intended load applied or transmitted to the ladder in a downward and vertical direction when the ladder is placed at a 75½ degree angle from the horizontal.

(ii) Each self-supporting ladder: At least four times the maximum intended load in a fully opened position on a level surface.

(2) Ladders designed in accordance with ANSI A14.1–1982, ANSI A14.2–1982, and ANSI A14.5–1982 are deemed to be in compliance with the requirements of paragraph (c)(1) of this section for the type of ladder to be used. The working loads corresponding to the duty ratings of portable ladders that pass the applicable ANSI test requirements shall be as follows:

Duty rating	Ladder type	(pounds)	Working load (Kg)
Extra heavy duty	IA	300	136.2
Heavy duty	I	250	113.5
Medium duty	II	225	102.2
Light duty	III	200	90.8

(3) The design of combination ladders shall be such that the ladder will be capable of meeting the requirements in paragraphs (c)(1) or (c)(2) of this section for stepladders when in the stepladder position, and for extension ladders when in the extension ladder position.

(4) The maximum intended load used for the design of portable ladders shall be at least 200 pounds (90.6 Kg).

(5) The combined weight of the employee using the portable ladder and any tools and supplies carried by the employee shall not exceed the maximum intended load of the ladder.

(6) Fixed ladders shall be capable of supporting at least two loads of at least 250 pounds (114 kg) each, concentrated between any two consecutive attachments, plus anticipated loads caused by ice buildup, winds, rigging, and impact loads resulting from the use of ladder safety devices. The number and position of additional concentrated loads of 250 pounds (114 kg)

each, determined from anticipated usage of the ladder, shall also be included in determining the capabilities of fixed ladders. Each step or rung shall be capable of supporting at least a single concentrated load of 250 pounds (ll4 kg) applied in the middle of the step or rung.

(7) Ladder rungs and steps shall be parallel, level, and uniformly spaced when the ladder is in position for use.

(8) Ladder rungs and steps shall be spaced not less than six inches (15 cm) apart, nor more than l2 inches (31 cm) apart as measured along the ladder siderails.

Exception to paragraph (c)(8) of this section: End frames of scaffolds and ladders in elevator shafts shall have rungs and steps spaced not less than six inches (15 cm) apart, nor more than 16–½ inches (41 cm) apart, as measured along the ladder siderails.

(9) Ladder rungs and steps shall have a minimum clear width of 16 inches (41 cm) for individual-rung and fixed ladders, 12 inches (30 cm) for portable metal ladders and portable reinforced plastic ladders, and 11–½ inches (29 cm) for portable wood ladders, as measured between the ladder siderails.

Exception to paragraph (c)(9) of this section: Narrow rungs, which are not designed to be stepped on, on the tapered ends of window washer ladders, fruit pickers' ladders, and similar ladders are exempt from the minimum rung width requirement.

(10) Wood ladders shall not be coated with any opaque covering, except for identification or warning labels which may be placed on one face only of a side rail.

(11) Metal ladders shall be protected against corrosion.

(12) The minimum toe clearance between the center line of ladder rungs and steps and any obstructions behind the ladder shall be seven inches (l8 cm).

Exception to paragraph (c)(12) of this section: Toe clearances of no less than four and one-half inches (ll.4 cm) are acceptable when a specific work operation renders a seven inch (l7.8 cm) clearance infeasible.

(13) The minimum perpendicular clearance between the center line of fixed ladder rungs and steps and any obstruction on the climbing side of the ladder shall be 30 inches (76 cm).

Exception to paragraph (c)(13) of this section: When unavoidable obstructions are encountered, the minimum perpendicular clearance between the centerline of fixed ladder rungs and steps and the obstruction on the climbing side of the ladder may be reduced to 24 inches, (61 cm) provided that a deflection device is installed to guide employees around the obstruction.

(14) Fixed ladders shall be equipped with personal fall protection systems in accordance with subpart I of this Part, or with cages or wells, wherever the length of any climb on any fixed ladder exceeds 24 feet (7.3 m), or wherever the top of the ladder is at a distance greater than 24 feet (7.3 m) above lower levels.

(15) Cages and wells provided for fixed ladders shall be designed to permit easy access to or egress from the ladder which they enclose. The cages and wells shall be continuous throughout the length of the fixed ladder except for access, egress and other transfer points. Cages and wells shall be designed and constructed to contain employees in the event of a fall, and to direct them to a lower landing.

(16) The length of continuous climb for any fixed ladder equipped only with a cage or well shall not exceed 50 feet (15.2 m). When ladder safety devices are also used with cages or wells, the length of continuous climb may exceed 50 feet (15.2 m).

(17) Fixed ladders with continuous lengths of climb greater than l50 feet (45.7 m) shall be provided with rest platforms at least every l50 feet (45.7 m). The rest platforms shall provide a horizontal surface of at least l8 inches by 24 inches (46 cm by 6l cm) and have at least the same strength as required for the fixed ladder.

(18) Except where portable ladders are used to access fixed ladders, ladders shall be offset with a landing platform between each ladder when two or more separate ladders are used to reach a work area. Landing platforms shall provide a horizontal surface of at least 24 inches by 30 inches (61 cm by 76 cm) and have at least the same strength as the ladders.

(19) Ladder surfaces shall be free of puncture or laceration hazards.

(20) Fixed individual rung ladders shall be constructed to prevent the employee's feet from sliding off the end.

(21) The distance from the centerline of fixed ladder grab bars to the nearest permanent object in back of the grab bars shall be no less than four inches (l0 cm).

(22) A ladder that might contact uninsulated energized electrical equipment shall have nonconductive siderails.

(23) Ladders having a pitch in excess of 90 degrees from the horizontal shall not be permitted, except for fixed ladders used in conical sections of manholes.

(24) The step-across distance from the centerline of the steps or rungs of a fixed ladder to the nearest edge of the structure, building, or equipment accessed shall not exceed 12 inches (30 cm).

(25) Ladders and ladder sections, unless so designed, shall not be tied or fastened together to provide longer length. Ladders and ladder sections shall not have their length increased by other means unless specifically designed for the means employed.

(26) A metal spreader or locking device shall be provided on each stepladder or combination ladder when used in the stepladder mode to hold the front and back sections securely in an open position.

§ 1910.24 Step bolts and manhole steps.

(a) *Scope and application.* This section covers step bolts and manhole steps used on structures such as, but not limited to, towers, stacks, conical manhole sections, and vaults. This section does not apply to individual rung ladders.

(b) *General requirements.* (1) Step bolts and manhole steps shall be continuous and spaced uniformly, not less than six inches (15 cm) nor more than 18 inches (46 cm) apart.

(2) The minimum clear step width of step bolts shall be four and one-half inches (14.4 cm). The minimum clear step width of manhole steps shall be 10 inches (25.4 cm).

(3) The minimum toe clearance for manhole steps shall be four inches (11.1 cm) from the point of embedment on the wall to the outside face of the step. The toe clearance in the center of the manhole step shall be a minimum of four and one-half inches (11.4 cm) measured to the outside face of the step.

(4) The minimum toe clearance for step bolts shall be seven inches (17.8 cm). Where obstructions cannot be avoided, toe clearances may be reduced to four and one-half inches (11.4 cm).

(5) Step bolts and manhole steps shall be designed to prevent the employee's foot from slipping or sliding off the end of the step bolt or manhole step.

(6) All manhole steps and step bolts installed after (*insert date 60 days after the effective date of the final rule in the* ***Federal Register***) and used in corrosive environments, shall be constructed of, or coated with, a material that will retard corrosion of the step or bolt.

(7) All manhole steps installed on or after (*insert date 60 days after the effective date of the final rule in the* ***Federal Register***) shall be provided with slip-resistant surfaces such as, but not limited to, corrugated, knurled, or dimpled surfaces.

(c) *Design, construction, maintenance, and inspection.* (1) *Step bolt design.* Each step bolt shall be capable of withstanding, without failure, at least four times the intended load to be applied to the bolt.

(2) Manhole steps installed before (*insert date 60 days after the effective date of the final rule in the* ***Federal Register***) shall be capable of supporting their maximum intended load.

(3) *Design of manhole steps installed after* (*insert date 60 days after the effective date of the final rule in the* ***Federal Register***). The employer shall ensure that manhole steps installed on or after (*insert date 60 days after the effective date of the final rule in the* ***Federal Register***) shall meet the following requirements:

(i) The manhole steps shall be capable of withstanding and remaining solidly secured after being subjected to a separate application of a horizontal pull out load of 400 pounds (1780 N), and a vertical load of 800 pounds (3650 N).

(ii) The manhole steps shall be capable of sustaining the vertical test load without developing a permanent set greater than one-half inch (12.7 mm).

(iii) The loads shall be applied over a width of three and one-half inches (8.9 cm) centered on the step, and applied at a uniform rate until the required load is reached.

(iv) No cracking or fracture of the step nor spalling of the concrete shall be visible.

(4) *Maintenance and inspection.* Step bolts and manhole steps shall be maintained in a safe condition and visually inspected prior to each use.

(5) *Component replacement.* Step bolts which are bent greater than 15 degrees below the horizontal shall be removed and replaced with bolts that meet the requirements of this section. Manhole steps that are bent to such an extent as to reduce the step's projection from the wall to less than four inches (11.1 cm) shall be removed and replaced with a

step meeting the requirements of this section, or with a climbing device meeting the requirements of this subpart.

§ 1910.25 Stairs.

(a) *Scope and application.* This section covers fixed stairs, spiral stairs, ship's stairs and alternating tread type stairs. It does not apply to stairs on mobile equipment; to articulated stairs that may be installed on floating roof tanks, waterfront dock facilities or access facilities to mobile equipment at angles which change with the rise and fall of the floating support or various heights of mobile equipment; or to stairs forming an integral part of machinery. It also does not apply to stairs used only for an emergency means of egress, which are covered by subpart E of this Part.

(b) *General requirements.* (1) Stairs with four or more risers shall be provided with at least one handrail. A stair rail system shall be provided on all unprotected sides or edges of stairways with a fall hazard of four feet (1.2 m) or more.

(2) Handrails and stair rails shall meet the applicable requirements in § 1910.28(c). Stair rail systems may also serve as handrails when properly installed.

(3) The sides and edges of stair landings with a fall hazard of four feet (1.2 m) or more, unless otherwise enclosed, shall be provided with guardrail systems meeting the requirements of § 1910.28.

(4) Stairs shall be capable of supporting, without failure, at least five times their maximum intended load.

(5) All stairs installed before (*insert date 60 days after the effective date of the final rule in the* ***Federal Register***) shall have a minimum vertical clearance of six feet, eight inches (2.05 m). The vertical clearance for all stairs (except spiral stairs) installed on or after (*insert date 60 days after the effective date of the final rule in the* ***Federal Register***) shall be a minimum of seven feet (2.1 m).

(6) Stairs shall be installed with uniform riser heights and tread depths between landings.

(c) *Fixed stairs.* (1) Fixed stairs shall be installed at angles up to 50 degrees from the horizontal.

(2) Riser heights on fixed stairs shall be from six and one-half inches to nine and one-half inches (16.5 to 24.1 cm). (3) Fixed stairs shall have a minimum width of 22 inches (55.9 cm) between vertical barriers.

(4) Fixed stairs with closed risers shall have a minimum stair tread depth of eight inches (20.3 cm).

(5) Fixed stairs with open risers shall have a minimum tread depth of six inches (15.2 cm).

(6) Stairway landings and platforms measured in the direction of travel shall be at least 22 inches (55.9 cm) wide, and not less than 30 inches (76 cm) in length.

(d) *Spiral stairways.* (1) The clear width of the stairs shall not be less than 26 inches (66 cm).

(2) The height of the riser shall not exceed nine and one-half inches (24.1 cm).

(3) The minimum headroom above spiral stairways shall be six feet, six inches (198 cm).

(4) Treads shall have a minimum depth of seven and one-half inches (19.1 cm) at a point 12 inches (30.5 cm) from the narrowest edge.

(5) All treads shall be identical.

(6) Where doors or gates open directly onto spiral stairways, landings shall be provided meeting the requirements of paragraph (c)(6) of this section.

(e) *Ship's stairs installed on or after (insert date 60 days after the effective date of the final rule in the* ***Federal Register***).

(1) Ship's stairs shall be installed at a slope between 50 degrees and 70 degrees from the horizontal.

(2) Risers shall be open; treads shall be at least four inches (10 cm) in depth, 18 inches (46 cm) in width, and have a vertical rise between tread surfaces of six and one-half to 12 inches (16 to 30 cm).

(3) Handrails meeting the requirements of § 1910.28 shall be installed on both sides of ship's stairs.

(f) *Alternating tread type stairs.* (1) Alternating tread type stairs shall have a series of steps between 50 and 70 degrees from the horizontal.

(2) Handrails shall be provided on both sides of alternating tread type stairs.

(3) The width between handrails shall be from 17 to 24 inches (43 to 61 cm).

(4) Alternating tread type stairs shall be equipped with slip-resistant surfaces on the treads.

(5) The tread shall have a minimum depth of eight and one-half inches (22 cm).

(6) The tread shall be at least seven inches (18 cm) wide at the nosing.

(7) Landings or platforms shall meet the requirements in paragraph (c)(6) of this section.

§ 1910.26 Ramps and bridging devices.

(a) *General requirements.* (1) Ramps and bridging devices shall be designed, constructed and maintained to support their maximum intended loads.

(2) Ramps and bridging devices used for the passage of vehicles shall be designed, constructed and maintained to prevent vehicles from running off the edge.

(3) There shall be a clearly designated and separated walkway for foot passage outside of the vehicle lane when ramps and bridging devices are used for the simultaneous passage of pedestrians and motorized vehicles except when pedestrians can precede or follow a vehicle at a safe distance.

(4) Ramps and bridging devices shall be secured to prevent their displacement while employees are on them. Vehicles, such as freight cars, onto which a ramp or bridging device has been placed, shall be prevented from moving, by such means as chocks or sand shoes, while the ramp or bridging device is being used by employees.

(5) A safe means of handling portable ramps and bridging devices, such as handholds or grab handles, shall be provided for employee use.

(6) Ramps and bridging devices constructed of two or more planks shall have the planks securely connected together to prevent displacement.

(b) *Specific requirements.* (1) *Fixed ramps.* (i) Each ramp used by employees that has a ramp angle greater than 20 degrees from the horizontal shall be provided with handrails meeting the requirements of § 1910.28.

(ii) The employer shall assure that the angle of ramps used by employees does not exceed 30 degrees from the horizontal.

(iii) Ramps which have a fall hazard of four feet (1.2 m) or more shall be provided with a stair rail system or equivalent fall protection system meeting § 1910.28.

(2) *Portable or elevating ramps and bridging devices.* (i) When one or both ends of a portable or elevating ramp or bridging device are not secured to the vehicle or dock, there shall be an overlap of at least four inches (10.2 cm) onto the unattached surface or surfaces.

(ii) Fall protection systems are not required for ramps or bridging devices when they are being used exclusively for material handling operations with motorized equipment, when:

(*a*) Employees engaged in those operations are exposed to fall hazards less than 10 feet (3 m); and,

(*b*) Those employees have been trained to recognize and avoid the hazards involved with this work. This training shall consist of instructions in the proper placement and securing of the ramps and bridging devices, securing of vehicles, and the proper use of material-handling equipment.

§ 1910.27 Work surfaces.

(a) *Scope and application.* (1) *Scope.* This section covers floors, ramps, roofs and similar walking and working surfaces, unless they are specifically covered elsewhere in this subpart.

(2) *Application.* This section does not apply to the following surfaces:

(i) Scaffolds covered in § 1910.30.

(ii) Landings on stairs which are covered in § 1910.25.

(iii) Platforms which are covered in § 1910.31.

(b) *General requirements.* (1) Employees exposed to unprotected sides or edges of surfaces that present a falling hazard of four feet (1.2 m) or more to a lower level or floor holes shall be protected by a fall protection system meeting the requirements of § 1910.28.

(2) Employees on surfaces which are less than four feet (1.2 m) above a lower level, but are above or adjacent to dangerous equipment, materials or operations, shall be protected by a fall protection system meeting the requirements of § 1910.28 to prevent their falling into or onto the hazardous areas.

(3) Employees who are exposed to falling through a covered opening in a surface that presents a fall hazard of four feet (1.2 m) or more to a lower level, and employees who are exposed to falling through skylights, shall be informed of the potential hazard and be protected by one of the following:

(i) The surface shall be designed, covered or reinforced to carry the intended load; or

(ii) Employees shall be protected by a fall protection system in accordance with § 1910.28.

(4) A floor hole less than one foot (30.5 cm) in its least dimension (the shortest distance from the edge of the work surface or toeboard to the object going through the work surface) provided for passage of machinery, piping, or

other equipment that may expand, contract, vibrate and/or move in a similar manner, need only be guarded by a toeboard or equivalent means to prevent the feet of employees from entering the hole or tools from falling through the opening and onto employees below.

Note: See § 1910.28(e) for all other floor holes.

(5) Floor hole guards shall be kept in place at all times, except when the nature of work operations require their removal, and where alternative means of protection have been provided.

(6) Employers shall install an appropriate guard, such as a toeboard which complies with § 1910.28, on the perimeter of a walking or working surface, when employees below that surface might be exposed to falling material.

§ 1910.28 Fall protection systems.

(a) *General Requirement.* (1) *Guardrail use.* Employers shall provide a guardrail system as the primary fall protection system for all walking and working surfaces regulated under this subpart unless the use of a guardrail is infeasible. When the use of a guardrail system is infeasible, the employer shall provide an appropriate alternative fall protection such as personal fall protection systems, hole covers, safety nets, etc. which complies with the requirements of this section.

(2) *Exceptions:* Employers that comply with paragraph (d) of this section need not use guardrail systems.

(b) *Guardrail systems and toeboards.* Requirements for suspension scaffold fall protection systems are contained in § 1910.30. All other guardrail systems and their components shall meet the following criteria:

(1) *Top rails.* The top rail or member of a guardrail system shall be capable of withstanding, without failure, a force of at least 200 pounds (890 N) applied within two inches (5 cm) of the top edge of the rail in any downward or outward direction at any point along the top edge. For guardrail systems installed before (*insert date 60 days after the effective date of the final rule in the **Federal Register***) when the 200 pound (890 N) test load is applied in a downward direction, the top edge of the guardrail shall not be less than 36 inches (91 cm) above the guarded surface level. For guardrail systems, other than those which comply with paragraph (b)(3)(iii) of this section installed on or after (*insert date 60 days after the effective date of the final rule in the **Federal Register***) when the 200 pound (890 N) test load is applied in a downward direction, the top edge of the guardrail shall not be less than 39 inches (1 m) above the guarded surface level. No permanent deformation is permitted in the system when the force is removed.

(2) *Midrails.* (i) Midrails, screens, mesh, intermediate vertical members, solid panels, or equivalent structural members shall be provided between the top rail of the guardrail system and the work surface.

(ii) Midrails and equivalent structural members shall be capable of withstanding, without failure, a force of at least 150 pounds (667 N) applied in any downward or outward direction at any point along the midrail. No permanent deformation is permitted in the system when the force is removed.

(iii) Midrails and other intermediate members shall be positioned so that the openings in the guardrail system are a maximum of 19 inches (48 cm) in their least dimension.

(3) *Height criteria.* (i) The top member of guardrail systems installed before (*insert date 60 days after the effective date of publication of the final rule in the **Federal Register***) shall be at least 36 inches (91 cm) above the work surface under all conditions.

(ii) The height of the top rail or equivalent component of guardrail systems installed on or after (*insert date 60 days after the effective date of the final rule in the **Federal Register***) shall be at least 42 inches (1.1 m) above the walking or working surface. Employers may build up the walking and working surface provided the requirements of paragraph (b)(1) of this section are met.

(iii) As an alternative to complying with paragraphs (b)(3)(i) and (b)(3)(ii) of this section, employers may reduce the height of the top surface of a guardrail system to no less than 30 inches (76 cm) at any point, provided the sum of the depth (horizontal distance) of the top edge, and the height of the top edge (vertical distance from the work surface to the top edge of the top member), is at least 48 inches (1.2 m).

(4) *Surfaces of guardrails.* Guardrail systems shall be so surfaced as to prevent injury to an employee from punctures or lacerations, and to prevent snagging of clothing which could cause an employee to fall.

(5) *Size criteria.* Top rails and midrails shall be at least one-quarter inch (0.6 cm) in outside diameter or thickness.

(6) *Access openings.* Employers may use movable guardrail sections using such materials as gates, non-rigid members and chains to provide access when opened and guardrail protection when closed, provided the criteria in paragraphs (b)(1) through (b)(5) of this section. Toeboards are not required in access openings.

(7) *Toeboard requirements.* (i) Toeboards shall be capable of withstanding, without failure, an outward force of at least 50 pounds (222 N) applied at any point in the direction of the exposed perimeter.

(ii) Toeboards shall be at least three and one-half inches (8.9 cm) in vertical height from their top edge to the level of the work surface.

(iii) Toeboards shall not be placed more than one-half inch (1.3 cm) above the work surface. They shall be solid or have openings not over one inch (2.5 cm) in their greatest dimension.

(c) *Handrail and stair rail systems.* (1) *Strength criteria.* Handrails and the top rails of stair rail systems shall be capable of withstanding, without permanent deformation or a loss of support, a force in any downward or outward direction at any point along the top edge, of at least 200 pounds (890 N) applied within two inches (5 cm) of the top edge of the rail.

(2) Height criteria. (i) The height of handrails installed before (*insert date 60 days after date of the final rule in the **Federal Register***) shall not be less than 30 inches (76 cm) nor more than 42 inches (1.1 m) from the top of the handrail to the surface of the tread in line with the face of the riser at the forward edge of the tread.

(ii) The height of handrails installed on or after (*insert date 60 days after the effective date of the final rule in the **Federal Register***) shall not be more than 37 inches (94 cm) nor less than 30 inches (76 cm) when measured in a manner consistent with the method described in (c)(2)(i) above.

(iii) The height of stair rail systems installed before (*insert date 60 days after the effective date of the final rule in the **Federal Register***) shall not be less than 30 inches (76 cm) from the upper surface of the tread. This distance shall be measured in a vertical direction at the intersection of the riser face and tread surface, or in the case of open risers, at the forward edge of the tread surface.

(iv) The height of stair rail systems installed on or after (*insert date 60 days after the effective date of the final rule in the **Federal Register***) shall be not less than 36 inches (91 cm) when measured in a manner consistent with the method described in (c)(2)(iii) of this section.

(v) A stair rail installed before (*insert date 60 days after the effective date of the final rule in the **Federal Register***) may also serve as a handrail when the height of the top edge is not more than 42 inches (1.1 m) nor less than 36 inches (91 cm) when measured at the forward edge of the tread surface.

(vi) A stair rail installed on or after (*insert date 60 days after the effective date of the final rule in the **Federal Register***) may also serve as a handrail when the height of the top edge is not more than 37 inches (94 cm) nor less than 36 inches (91 cm) when measured at the forward edge of the tread surface.

(3) *Finger clearance.* The minimum clearance between handrails, including the top edge of stair rail systems serving as handrails, and any obstructions shall be one and one-half inches (4 cm).

(4) *Surfaces.* Handrail and stair rail systems shall be surfaced to prevent injury to employees from punctures or lacerations, and to prevent snagging of clothing.

(5) *Openings in stair rails.* Openings in a stair rail system shall be a maximum of 19 inches (48 cm) in their least dimension.

(6) *Handhold.* Handrails shall have the shape and dimension necessary to provide a firm handhold for employees.

(7) *Projection hazards.* Ends of stair rail systems and handrails shall not present a projection hazard.

(d) *Designated areas.* (1) *General requirements for use.* Employers may establish designated areas which comply with the provisons of this paragraph as an alternative to installing guardrails, where employers demonstrate that employees within the designated areas are not exposed to fall hazards. In addition, the following conditions and requirements must be met in order to use designated areas in lieu of other fall protection measures:

(*a*) The work must be of a temporary nature, such as maintence on roof top equipment.

(*b*) Designated areas shall be established only on surfaces that have a slope from horizontal of 10 degrees or less.

(*c*) The designated area shall consist of an area surrounded by a rope, wire or chain and supporting stanchions erected in accordance with the criteria in paragraphs (d)(2) through (d)(5) of this section.

(2) *Strength criteria.* (i) After being erected with the line (such as rope, wire or chain) attached, stanchions shall be capable of resisting, without tipping over, a force of at least 16 pounds (71 N) applied horizontally against the stanchion. The force shall be applied 30 inches (76 cm) above the work surface and perpendicular to the designated area perimeter, and in the direction of the unprotected side or edge;

(ii) The line shall have a minimum breaking or tensile strength of 500 pounds (2.2 kN), and after being attached to the stanchions, shall be capable of supporting, without breaking, the loads applied to the stanchions as prescribed in paragraph (d)(2)(i) of this section; and

(iii) The line shall be attached at each stanchion in such a way that pulling on one section of the line between stanchions will not result in slack being taken up in adjacent sections before the stanchion tips over.

(3) *Height criteria.* The line shall be installed in such a manner that its lowest point (including sag) is no less than 34 inches (86 cm) nor more than 39 inches (1 m) from the work surface.

(4) *Visibility criteria.* The line forming the designated area shall be clearly visible from any unobstructed location within the designated area up to 25 feet (7.6 m) away, or at the maximum distance a worker may be positioned away from the line, whichever is less.

(5) *Location criteria.* (i) The stanchions shall be erected as close to the work area as is permitted by the task.

(ii) The perimeter of the designated area shall be erected no less than six feet (1.8 m) from the unprotected side or edge.

(iii) When mechanical equipment is being used, the line shall be erected not less than six feet (1.8 m) from the unprotected side or edge which is parallel to the direction of mechanical equipment operation, and not less than 10 feet (3.1 m) from the unprotected side or edge which is perpendicular to the direction of mechanical equipment operation.

(iv) Access to the designated area shall be by a clear path, formed by two lines, attached to stanchions, which meet the strength, height and visibility requirements of this paragraph.

(e) *Holes.* Covers for holes in floors, roofs and other walking and working surfaces shall comply with the following provisions:

Note: See § 1910.27(b)(4) for floor holes provided for the passage of machinery, piping or other equipment.

(1) Covers located in roadways and vehicular aisles shall be capable of supporting, without failure, at least twice the maximum axle load of the largest vehicle expected to cross over the cover.

(2) All other covers shall be capable of supporting, without failure, the maximum intended load of employees, equipment and material to be applied to the cover at any one time, or 250 pounds (114 kg), whichever is greater.

(3) All covers shall be installed so as to prevent accidental displacement.

(f) *Personal fall protection systems.* All body belts and body harnesses and their associated fall protection systems shall meet the applicable requirements of subpart I of this Part.

(g) Restraint line systems. Where an employee is tethered, restraint line systems shall meet the applicable requirements of subpart I in order to prevent a fall from an unprotected side or edge or into an opening.

(h) *Safety net systems.* Safety net systems and their use shall comply with the following provisions:

(1) Safety nets shall be installed as close as practicable under the work surface on which employees are working, but in no case more than 30 feet (9.1 m) below such work surfaces.

(2) Safety nets shall be installed with sufficient clearance under them to prevent contact with the surface or structures below if subjected to an impact equal to that imposed under the required drop test.

(3) Safety nets shall extend outward from the outermost projection of the work surface as follows:

Vertical distance—(working level to horizontal plane of net)	Minimum required horizontal—distance (net outer edge to working surface edge)
Up to 5 feet (1.5 m)	8 feet (2.4 m).
More than 5 feet (1.5 m) up to 10 feet (3 m).	10 feet (3 m).
More than 10 feet (3 m)	13 feet (4 m).

(4) Safety nets and their installations shall be capable of absorbing the impact force of a drop test, consisting of a 400 pound (180 kg) bag of sand 30 ± 2 inches (76 ± 5 cm) in diameter dropped into the net from the highest work surface on which employees are to be protected. Each safety net and its installation shall be successfully drop-tested to meet this requirement at the job site before being used as a fall protection system.

Exception to paragraph (h)(4) of this section:

When the employer can demonstrate that such a drop test is not practicable, the net installation may be used if a qualified person certifies that the installation meets the strength requirements of this paragraph (h)(4) and all other requirements of this paragraph (h).

(5) Safety nets which are in use shall be inspected weekly for mildew, wear, damage or deterioration, and shall be removed from service if their required strength has been substantially reduced.

(6) Any materials, scrap pieces or tools which may have fallen into the safety net shall be removed as soon as possible, but at least before the next work shift.

(7) The maximum size of each safety net mesh opening shall not exceed 36 square inches (232 cm^2), nor be longer than six inches (15 cm) on any side measured center-to-center of mesh ropes or webbing. All mesh crossings shall be secured to prevent enlargement of the mesh opening.

(8) Each safety net, or section of it, shall have a border rope or webbing with a minimum breaking strength of 5,000 pounds (22.2 kN).

(9) Connections between safety net panels shall be as strong as integral net components, and shall be spaced at intervals not more than six inches (15 cm) apart.

§ 1910.29 Wall openings.

(a) *Existing wall openings.* Existing wall openings shall be guarded by a fall protection system meeting the applicable requirements of § 1910.28 if their lower edge is less than 36 inches (91.4 cm) above a work surface, and if they present a hazard to employees of falling through and down more than four feet (1.2 m).

(b) *New wall openings.* Wall openings constructed on or after (*insert date 60 days after the effective date of the final rule in the* ***Federal Register***) shall be guarded by a fall protection system meeting the applicable requirements of § 1910.28 if their lower edge is less than 39 inches (1 m) above a work surface, and if they present a hazard to an employee of falling through and down more than four feet (1.2 m).

(c) *Grab handles.* Wall openings shall be provided with accessible grab handles on each side of the opening whenever the work activity requires employees to work through an unprotected opening by reaching through or around the opening. Each grab handle shall be capable of withstanding a maximum horizontal pull-out force equal to two times the intended load, or 200 pounds (890 N), whichever is greater. In addition, employees shall be provided with a fall protection system meeting the requirements of § 1910.28.

§ 1910.30 Scaffolds.

(a) *Scope and application.* This section applies to two-point adjustable scaffolds, single-point adjustable suspension scaffolds, mobile manually propelled scaffolds, and boatswains' chairs and components when used in general industry. Any other type of scaffolds not specifically covered in this section shall meet the applicable requirements of 29 CFR Part 1926, subpart L.

(b) *Restrictions.* The use of ''lean-to'' or ''shore'' scaffolds is prohibited.

(c) *General requirements.* (1) *Scaffold installation and use.* Scaffold installation and use shall meet the following conditions:

(i) Ladders or makeshift devices shall not be used on top of scaffold platforms to increase the height at which employees work.

(ii) Scaffold suspension ropes or devices shall hang vertically without being pulled laterally unless specifically designed and intended for such use.

(iii) When employees on scaffolds are exposed to falling objects, overhead protection shall be provided in such a manner as to deflect or resist penetration of objects that are likely to fall onto the employees.

(iv) Scaffolds shall not be moved horizontally nor altered while they are in use or occupied by employees, except when a scaffold has been specifically designed for such use.

(v) Tools, materials and debris shall not be allowed to accumulate in quantities to cause a hazard.

(vi) Work is prohibited on scaffolds covered with snow, ice or other slippery material except as necessary for removal of such material.

(vii) Work on or from scaffolds is prohibited when winds are above 40 miles per hour (64.4 km/hr) unless the employer can establish that employees are protected from the effects of the wind's force and that the scaffold is properly secured against the wind loads imposed on it. Wind screens shall not be used unless the scaffold is designed for them and the scaffold is secured against wind loads imposed on it.

(viii) Scaffolds shall not be erected, used, or moved closer to exposed and energized power lines than as follows:

(*a*) For all lines of more than 50 kv, minimum clearance between the lines and all parts of the scaffold shall be 10 feet (3.1 m) plus 0.4 inch (1 cm) for each 1 kv over 50 kv, or twice the length of the line insulator, but never less than 10 feet (3.1.m);

(*b*) For all insulated lines between 300 volts and 50 kv, the minimum clearance between the lines and all parts of the scaffold shall be 10 feet (3.1 m);

(*c*) For all insulated lines of less than 300 volts, the minimum clearance between the lines and all parts of the scaffold shall be two feet (0.6 m);

(*d*) For all lines of any voltage which are uninsulated, the minimum clearance between the lines and all parts of the scaffold shall be 10 feet (3.1 m) for lines of 50 kv and less; and for lines more than 50 kv, 10 feet (31 m) plus 0.4 inch (1 cm) for each 1 kv over 50 kv, or twice the length of the line insulator, but never less than 10 feet (3.1m).

(ix) Where material is being hoisted onto or near a scaffold, tag lines or other equivalent measures to control the hoisted load shall be utilized.

(2) *Suspension ropes.* (i) Suspension ropes shall be capable of supporting, without failure, at least six times the intended load applied or transmitted to that rope.

(ii) Suspension ropes supporting manually-powered suspended scaffolds shall be no less than one-fourth of an inch (.63 cm) diameter steel wire rope or equivalent. The minimum grade of wire rope shall be improved plow steel.

(iii) Suspension ropes supporting suspended powered scaffolds shall be no less than five-sixteenths of an inch (.79 cm) diameter wire rope or equivalent. The minimum grade of wire rope shall be improved plow steel.

(iv) Winding rope hoists shall contain at least four wraps of the suspension rope when the scaffold is at the lowest point of travel. In all other situations, the suspension ropes shall either be of such length that the scaffold can be lowered to the level below without the rope end passing through the hoist, or the rope end shall be configured or provided with a means to prevent its end from passing through the hoist.

(v) Ropes terminating at drums shall be attached to the drum by a positive mechanical means.

(vi) Wire suspension ropes shall not be joined together except by eye splicing with shackles, or by coverplates and bolts.

(vii) Swaged attachments or spliced eyes on wire suspension ropes shall be made only by the wire rope manufacturer or by a qualified person. The swaged attachments or spliced eyes made by a qualified person shall be at least equivalent to devices made by the rope manufacturer.

(viii) Wire rope clips shall be installed by a qualified person, retightened after initial loading, and be inspected and kept tight thereafter.

(ix) Suspension ropes shall be protected from exposure to open flames, hot work, corrosive chemicals or other destructive conditions.

(x) Ropes shall be regularly inspected and serviced. The use of repaired wire rope as suspension rope is prohibited, and defective suspension ropes shall not be used.

(3) *Strength.* Each scaffold and scaffold component, except suspension ropes and guardrail systems, shall be capable of supporting, without failure, its own weight and at least four times the maximum intended load applied or transmitted to that component. Scaffold components selected, built and loaded in accordance with Appendix A of this subpart, will be deemed to meet this requirement.

(4) *Loading of scaffolds.* No scaffold shall be loaded in excess of its maximum intended load. The employer shall inform all employees working with scaffolds of the maximum intended load for the scaffold in use.

(5) *Coating of wood platforms.* Wood platform units shall not be covered with opaque coatings. Unit edges may be marked for purposes of identification. Periodic coating with a wood preservative, fire retardant or slip-resistant coating is permitted, so long as the coating does not obscure the top or bottom wood surface.

(6) *Erection and inspection.* Scaffolds shall be erected and used under the supervision of a qualified person in accordance with applicable manufacturers' recommendations. Scaffolds shall be inspected for visible defects prior to each day's use and after any occurrence which could affect a scaffold's structural integrity. Deficiencies shall be corrected before use.

(7) *Platform width.* Scaffold platform units shall be at least 18 inches (46 cm) wide.

(8) *Platforms.* Platforms at all working levels shall be fully planked or decked with platform units between the front uprights and the guardrail supports as follows:

(i) Platform units shall be placed as close as possible to adjacent units. Any space between adjacent units shall be no more than one inch (2.5 cm) except as necessary to fit around uprights when side brackets are used to extend the width of the platform.

(ii) Where full planking or decking cannot be obtained using standard width units, the platform shall be planked or decked as fully as possible; however, the remaining open space between the platform and guardrail supports shall not exceed nine and one half inches (24 cm).

(9) *Positioning the front edge of a scaffold.* The front edge of all scaffold platforms shall be positioned as close as practical to the structure being worked, but not more than 14 inches (35 cm) from the face of the structure unless a guardrail system meeting the requirements of § 1910.28 is used. When scaffold frames cannot be positioned within this maximum distance, side brackets or other means may be used to extend the platform width to within 14 inches (35 cm) from the face of the structure being worked.

(10) *Protection of employees working below scaffolds.* Toeboards, overhead protection or other equivalent protection shall be provided to prevent tools or material from falling onto employees working below scaffolds.

(11) *Extension of platform units over supports.* Scaffold platform units, unless cleated or otherwise restrained by hooks or equivalent means at both ends, shall extend over their end supports no less than six inches (15 cm) and not more than 18 inches (46 cm). A unit may extend more than 18 inches (46 cm) over the end support when the unit is designed and installed to support employees on the extended area without tipping, or guarded to prevent access to the cantilevered ends.

(12) *Abutment of platforms.* On scaffolds where units are abutted to create a longer platform, each abutted end shall rest on a separate support, butt plate, or equivalent means of support.

(13) *Overlapping of platforms.* On scaffolds where platform units are overlapped to create a longer platform, the overlap shall occur only over supports, and shall not be less than 12 inches (30.5 cm), unless the planks are nailed together or otherwise restrained to prevent movement.

(14) *Intermixing of components.* Scaffold components manufactured by different manufacturers shall not be intermixed unless the component parts fit together without force or modification, and the resulting scaffold meets the requirements of this section.

(15) *Ladders.* All ladders shall be located so as not to adversely affect the stability of the scaffold.

(16) *Access.* An access ladder, or equivalent safe access, shall be provided to scaffold platforms.

(17) *Gasoline-powered hoists.* Gasoline-powered hoists shall not be located on suspension scaffolds.

(18) *Listing of hoists.* Suspension scaffold mechanically-powered hoists and manually-powered hoists shall be of a type tested and listed by a nationally recognized testing laboratory. Refer to § 1910.7 for definition of nationally recognized testing laboratory.

(19) *Power-operated gears and brakes.* All power-operated gears and brakes on suspension scaffold hoists shall be guarded to prevent employee injury.

(20) *Automatic braking devices.* In addition to the normal operating brake, mechanically-powered hoists on suspension scaffolds shall have a braking device which engages automatically when the normal speed of descent of the hoist is exceeded.

(21) *Manually powered hoists.* Manually powered hoists shall require a positive crank force to descend.

(22) *Support surfaces for suspension scaffold support devices.* All suspension

scaffold support devices such as outrigger beams, cornice hooks, parapet clamps, and similar devices, shall rest on surfaces capable of supporting the reaction forces imposed by the scaffold hoist operating at its maximum rated load.

(23) *Evaluating decks to support intended loads.* When an employer chooses to use outrigger beams in conjunction with a suspended scaffold, a qualified person shall evaluate the direct connections to roof and floor decks before suspension scaffold outrigger beams are used, in order to ensure that such decks are capable of supporting the loads to be imposed.

(24) *Inboard ends of outrigger beams.* The inboard ends of suspension scaffold outrigger beams shall be stabilized by bolts or other direct connections to the floor or roof deck, or they shall have their inboard ends stabilized by counterweights.

(i) Direct connections shall be evaluated before use by a qualified person who shall affirm, based on the evaluation, that the supporting surfaces are capable of supporting the loads to be imposed.

(ii) Counterweights shall be made of non-flowable solid material.

(iii) Counterweights shall be secured by mechanical means to the outrigger beams.

(iv) Counterweights shall not be removed from a scaffold until the scaffold is disassembled.

(v) Outrigger beams shall be secured by tiebacks equivalent in strength to the suspension ropes.

(vi) Tiebacks shall be secured to a structurally sound portion of the building or structure.

(vii) Tiebacks shall be installed parallel to the centerline of the beam.

(25) *Outrigger beams.* Scaffold outrigger beams:

(i) Shall be provided with stop bolts or shackles at both ends;

(ii) Shall be securely fastened together, with the flanges turned out when channel iron beams are used in place of I-beams;

(iii) Shall be installed with all bearing supports perpendicular to the beam centerline;

(iv) Shall be set and maintained with the web in a vertical position;

(v) Where a single outrigger beam is used, shall have the steel shackles or clevises with which the wire ropes are attached to the outrigger beam placed directly over the hoisting machine;

(vi) Shall be made of structural metal or equivalent material; and,

(vii) Shall be restrained to prevent movement.

(26) *Suspension scaffold support devices.* Suspension scaffold support devices such as cornice hooks, roof hooks, roof irons, parapet clamps or similar devices shall be:

(i) Made of mild steel, wrought iron, or materials of equivalent strength;

(ii) Supported by bearing blocks; and

(iii) Secured against movement by tiebacks installed at right angles to the face of the structure whenever possible, and secured to a structurally sound portion of the structure. Vents, standpipes, other piping systems, and electrical conduit shall not be used as points of tie-off for tiebacks. Tiebacks shall be equivalent in strength to the hoisting rope.

(27) *Fall protection for suspension scaffolds.* Employees working on single-point suspension scaffolds and two-point suspension scaffolds shall be protected from falls in the following manner:

(i) All open sides and ends of the scaffolds shall be protected by barriers that meet the following:

(*a*) At least 36 inches (91 cm) in height;

(*b*) The top member of barrier shall withstand at least a 100 pound (444 N) force in any downward or outward direction;

(*c*) The midrails shall withstand at least a 75 pound (333 N) force in any downward or outward direction; and

(*d*) A standard toeboard meeting the requirements of § 1910.28 is also required when employees below are exposed to hazards from tools, equipment or other objects falling from the scaffold edges;

(ii) Employees on single level scaffolds (one working level) or the top surface of multilevel scaffolds shall be protected by a personal fall protection system meeting the requirements of subpart I, which is attached to either:

(*a*) a structure (anchorage point) not to the scaffold or the scaffold suspension means, or:

(*b*) A supplementary platform support line, or a scaffold member which can withstand an impact force of 5,000 pounds (22.2 kN) if supplementary platform support lines are used in conjunction with automatic safety locking devices capable of stopping the fall of the scaffold in the event any of the main suspension lines fail.

(iii) Multilevel platforms and scaffolds with overhead protection shall be provided with supplementary platform support lines and automatic safety locking devices capable of stopping the fall of the loaded platform in the event any of the main suspension lines fail. Employees shall be provided with a personal fall protection system meeting the requirements of subpart I of this part. Employees working below an obstruction shall be attached to a scaffold member capable of withstanding an impact force of 5,000 pounds (22.2 kN) or greater.

(d) *Two-point adjustable suspension scaffolds (swing stages).* (1) *Platform unit width.* Platform units shall be no more than 36 inches (91 cm) wide, unless designed by a qualified person to be stable under the conditions of use.

(2) *Platform units.* Platform units shall be securely fastened to hangers (stirrups) by U-bolts or by other equivalent means. Light-metal type platforms shall be tested and listed by a nationally recognized testing laboratory.

(3) *Securing scaffolds.* Two-point adjustable suspension scaffolds shall be secured to prevent them from swaying. Window cleaners' anchorages shall not be used for this purpose.

(4) *Bridging scaffolds.* Scaffolds designed for use as two-point suspension scaffolds shall not be bridged or otherwise connected one to another during raising and lowering operations. Two-point suspension scaffolds designed for use in multi-point suspension systems may be bridged one to another if the bridge connections are articulated and the hoists properly sized.

(5) *Passage between scaffolds.* Passage may be made from one platform unit to another only when the platform units are at the same height, are abutted, and have walk-through stirrups specifically designed for this purpose.

(e) *Single-point adjustable suspension scaffolds.* (1) *Testing and listing.* Single-point adjustable suspension scaffolds including hoists, shall be of a type that is tested and listed by a nationally recognized testing laboratory.

(2) *Combining single-point adjustable suspension scaffolds.* When two single-point adjustable suspension scaffolds are combined to form a two-point suspension scaffolds, the resulting scaffold shall meet the requirements for two-point adjustable suspension scaffolds.

(f) *Mobile manually propelled scaffolds.* (1) *Guarding against falls.* Employees on mobile scaffolds more than 10 feet (3 m) above lower levels shall be protected from falling to lower levels along all open sides and ends of the platform unit by a fall protection system meeting the requirements of § 1910.28.

(2) *Casters and wheels.* Caster stems and wheel stems shall be secured to prevent them from accidentally falling out of their mountings.

(3) *Supporting surfaces.* Mobile scaffolds shall only be used on surfaces that are rigid and capable of supporting the scaffold in a loaded condition. Unstable objects, such as barrels, boxes, loose bricks, or concrete blocks shall not be used to support the scaffolds.

(4) *Leveling.* Screw jacks or equivalent means shall be used when leveling of the scaffold is necessary.

(5) *Securing mobile scaffolds.* Mobile scaffolds being used in a stationary manner shall be secured against unintentional movement.

(6) *Moving mobile scaffolds.* The force used to move a mobile scaffold shall be applied as close to the base as practicable, but no more than five feet (1.5 m) above the supporting surface, and provisions shall be made to stabilize the scaffold to prevent tipping during movement. Surfaces over which the scaffold is to pass shall be free of obstructions and openings that may cause the scaffold to tip.

(7) *Riding mobile scaffolds.* Employees shall not be allowed to ride on scaffolds unless the following conditions are met:

(i) The surface over which the scaffold will pass shall be within three degrees of level, and free of pits, holes, and obstructions;

(ii) The maximum height to base width ratio of the scaffold during movement shall be two to one or less. Outrigger frames may be included as part of the base width dimension;

(iii) Outrigger frames, when used, shall be installed on opposite sides of the scaffold;

(iv) Tools and materials shall be secured to prevent movement or removed from the platform unit, or toeboards shall be installed on all sides of the scaffold;

(v) Employees shall not be on any part of the scaffold which extends outward beyond the wheels, casters, or other supports; and

(vi) Employees on the scaffold shall have advance knowledge of the movement.

(8) *Height to base ratios.* Scaffolds with height to base width ratios more than four to

one shall be restrained by guying, tying, bracing, or other equivalent means sufficient to prevent tipping.

(9) *Preventing swaying and displacement.* Scaffold poles, legs, posts, and uprights shall be plumb, secure, and rigidly braced to prevent swaying and displacement.

(10) *Extending platform units beyond base supports.* Platform units shall not extend outward past the base supports of the scaffold unless outrigger supports or equivalent devices are used and will assure stability.

(g) *Boatswains' chairs.* (1) *Chair strength.* The chair shall be of a size suitable for the intended purpose, and shall be of such strength to hold the intended live load, but not less than 250 pounds (1.1 kN) without failure.

(2) *Tie backs.* Tie backs, if used, shall be approximately perpendicular to the structure face.

(3) *Personal fall protection system.* Each employee shall be protected from falling by body belts or harnesses, lanyards and lifelines, separate from the chair support system. The personal fall protection system shall meet the requirements of subpart I of this part.

(4) *Tackle.* Boatswains' chair tackle shall be correctly sized for the rope being used and the rope shall be ''eye'' spliced. The breaking strength of the suspension rope shall be at least 4,400 pounds (19.5 kN).

(5) *Seat slings for heat producing processes.* The seat sling shall be constructed of at least three-eighths of an inch (9.5 cm) diameter wire rope when the employee using it is conducting a heat-producing process.

§ 1910.31 Mobile elevating work platforms, mobile ladder stands and powered industrial truck platforms.

(a) *Application.* This section applies to the design and installation of platforms used in conjunction with powered industrial trucks, and to mobile elevating work platforms and mobile ladder stands. The three types of equipment covered by this section shall be collectively be refered to as ''units''.

(b) *General requirements.* (1) All units shall be designed, installed and maintained to support the maximum intended loads in any configuration that may be used.

(2) All units shall be given a visual inspection prior to use for defects that could cause employee injury. The employer shall ensure that the manufacturers' specifications for inspection and maintenance are met where applicable.

(3) Defective units shall be tagged ''Do not use'' or with a similar legend in accordance with § 1910.145, and removed from service until repaired by a qualified person.

(4) Employees shall be trained in the safe use of units before they are allowed to use them.

(5) Each unit shall be secured to prevent unintended motion while in use.

(6) The use of any device to achieve additional height on a unit is prohibited.

(7) All surfaces shall be free of hazards that can cause puncture or laceration injuries to employees.

(c) *Mobile elevating work platforms.* (1) *Minimum loading.* Units shall be capable of supporting at least 300 pounds (135 kg).

(2) *Structural safety factors.* (i) All load-supporting structural elements of the units shall have a structural safety factor of not less than two, based on the minimum yield strength of the material.

(ii) All load-supporting structural elements of units that are made of nonductile materials (such as cast iron or fiberglass) shall have a structural safety factor of not less than five, based on the allowable unit stress of the material.

(3) *Maximum platform height.* The maximum platform height of units that only elevate in the vertical plane, without any articulation, shall not exceed four times the minimum base dimensions unless the employer demonstrates that equivalent stability is provided. When greater heights are necessary, properly fitted outrigger frames, guying or bracing shall be provided.

(4) *Platforms.* Unit platforms shall meet the following requirements:

(i) The minimum platform width shall be 18 inches (46 cm).

(ii) The platform shall be provided with a fall protection system meeting the requirements of § 1910.28.

(iii) Toeboards meeting the requirements of § 1910.28 shall be provided on all sides of the platform except across access openings.

(5) *Hydraulic or pneumatic systems.* All components of a hydraulic or pneumatic system, whose failure could result in free descent or an uncontrollable fall of the unit, shall have a bursting strength that exceeds the pressure attained when the system is subjected to the equivalent of four times the system's design factor. All other hydraulic components shall have a bursting strength of at least two times the design factor.

(6) *Safety factor for wire ropes and chains.* Where the platform is supporting its maximum intended load by a system of wire ropes, chains, or both, the safety factor of the wire rope or chain shall not be less than eight to one, based on the ultimate strength of the rope or chain in use.

(7) *Elevating assembly.* The elevating assembly shall be equipped and maintained so that it will not allow a free descent or an uncontrollable fall in the event of the assembly's failure. Any unit equipped with a powered elevating assembly shall be supplied with a clearly marked means for emergency lowering that is accessible from the ground level.

(8) *Outriggers and stabilizers.* Outriggers and stabilizers shall be constructed to prevent unintentional retraction.

(9) *Lateral movement.* The employer shall assure before and during lateral movement of units that:

(i) The platform has been lowered to base level;

(ii) Tools and materials on the platform have been secured from falling or have been removed;

(iii) Employees are off the platform; and

(iv) The area the unit is being moved through has a firm footing and is cleared of obstructions.

(10) *Lowering platforms.* The area surrounding the unit shall be cleared of employees and equipment before the platform is lowered.

(d) *Mobile ladder stands.* (1) *Strength.* Mobile ladder stands shall be capable of supporting at least four times their intended loading. The minimum design working load shall be calculated on the basis of one or more 200 pound (91 kg) persons, together with 50 pounds (23 kg) of equipment each for a combined weight of 250 pounds (114 kg) for each employee.

(2) *Maximum work surface height.* The maximum work surface heights of mobile ladder stands shall not exceed four times the least base dimension without additional support. When greater heights are needed, outrigger frames shall be employed to achieve this minimum base dimension, or the units shall be guyed or braced to prevent tipping.

(3) *Guardrails and railing systems.* (i) Units having more than five steps or 60 inches (1.5 m) in vertical height to the top step, but less than 10 feet (3 m), placed into service on or after (*insert date 60 days after the effective date of the final rule in the* ***Federal Register***) shall have a railing system on all exposed sides and ends at least 29 inches (73.6 cm) high.

(ii) Units with a maximum work surface height of at least four feet 1.2 m), but less than 10 feet (3 m), placed into service on or after (*insert date 60 days after the effective date of the final rule in the* ***Federal Register***) shall have a railing system on all exposed sides and ends at least 30 inches (76 cm) high.

(iii) All units placed into service before (*insert date 60 days after the effective date of the final rule in the* ***Federal Register***) with a maximum work surface height of 10 feet (3 m) or higher, shall be protected on the exposed sides and ends with a guardrail system at least 36 inches (91 cm) high.

(iii) Units placed into service on or after (*insert date 60 days after the effective date of the final rule in the* ***Federal Register***) and with a maximum work surface height of 10 feet (3 m) or greater, shall have a guardrail system and toeboards meeting the requirements of § 1910.28 of this subpart on all exposed sides and ends.

(iv) Removable gates and non-rigid members such as chains or other means to provide access are permitted in guardrail systems and railing systems provided that the access openings are appropriately guarded when not in use. Toeboards are not required in access openings.

(4) *Handrails.*

(i) Units having more than five steps, or units that are 60 inches (1.5 m) or greater in vertical height to the top step, placed into service before (*insert 60 days after the effective date of the final rule in the* ***Federal Register***) shall be equipped with handrails that are at least 29 inches (73.6 cm) high (measured vertically from the center of the step) on both sides of its steps.

(ii) Units with a maximum work surface height of four feet (1.2 m) or more, placed into service on or after (*insert 60 days after the effective date of the final rule in the* ***Federal Register***) shall be equipped with handrails meeting the requirements of § 1910.28 of the subpart on both sides of its steps.

(5) *Steps.* Steps shall be uniformly spaced and create a uniform slope, with a rise of not less than six and one-half inches (16.5 cm)

nor more than 10 inches (25.4 cm); a depth of not less than seven inches (17.7 cm); and a minimum width of 16 inches (40.6 cm). The slope created by the steps shall be a maximum of 60 degrees measured from the horizontal.

(6) *Locking the unit.* Units shall be locked in position using at least two means of locking when units are in use. Swivel casters, if used, shall be provided with a positive lock on the swivel or wheel or both.

(7) *Riding on units.* Employees shall not ride on mobile ladder stands.

(e) *Powered industrial truck platforms.* (1) *Platforms. Platforms* shall be secured to the lifting carriage or forks of the industrial truck.

(2) *Protection from moving parts.* Employees on a platform shall be protected from the moving parts of the truck.

(3) *Overhead protection.* Overhead protection shall be provided when employees are exposed to objects falling from above.

(4) *Minimum width.* The minimum width of the platform shall be 18 inches (46 cm).

(5) *Fall protection system.* Employees on platforms four feet (1.2 m) or more off the ground shall be protected by a fall protection system meeting the requirements of § 1910.28.

§ 1910.32 Special surfaces.

(a) *Scope and application.* This section regulates fall protection for the walking and working surfaces specified herein. The requirements located in other sections of this subpart apply when not in conflict with the requirements in this section.

(b) *Specific requirements.* (1) *Repair pits and assembly pits.* Repair pits and assembly pits over four feet (1.2 m) but less than 10 feet (3 m) deep need not be protected by a fall protection system meeting the requirements of § 1910.28, provided that the following requirements are met:

(i) Access within six feet (1.8 m) of the edge of the pit is limited to authorized employees;

(ii) Authorized employees shall be trained to recognize and avoid the hazards involved with work around the pit area. (iii) Floor marking in colors contrasting to that of the surrounding area shall be applied, or rope, wire or chain with support stanchions meeting the requirements of § 1910.28(d), or a combination of these, shall be placed at a distance of at least six feet (1.8 m) from the edges of the pits;

(iv) Caution signs stating ''Restricted area,'' ''Authorized employees only,'' or a similar legend, and meeting the requirements of § 1910.145 of this part shall be used to limit entry into the area to authorized employees.

(2) *Slaughtering facilities platforms.* Where the placement of guardrails would cause carcasses being processed under Federal meat inspection regulations to contact working surfaces, the perimeter protection requirements in § 1910.27 do not apply, but the following requirements do apply:

(i) Access to the platform is limited to authorized employees only.

(ii) Toeboards meeting the requirements in § 1910.28(b)(7) or equivalent similar means shall be provided at these work locations to prevent employees from sliding off or falling off the exposed perimeter.

(iii) All of the other sides of platforms shall be guarded as required by § 1910.27 by a fall protection system meeting the requirements of § 1910.28.

(iv) Employees working on the unprotected side of a slaughtering platform shall be trained to recognize and avoid hazards, such as slippery surfaces, that are involved with their work and to understand the importance of the toeboard or other available protective devices.

(3) *Loading racks.* (i) The working side of loading rack platforms which are used for access to tank cars, tank trucks, or similar equipment, need not have fall protection meeting the requirements of § 1910.28.

(ii) All of the other sides of the loading rack shall be guarded as required by § 1910.27 by a fall protection system meeting the requirements of § 1910.28.

(iii) All runways shall be at least 18 inches (46 cm) wide.

(iv) Employees who may be exposed to fall hazards shall be trained to recognize and avoid hazards associated with this type of work.

(4) *Loading docks and teeming tables.*

(i) Employers are not required to install guardrail systems on the working side of platforms such as loading docks and teeming tables, where the employer can demonstrate that the presence of guardrails would prevent the performance of work.

(ii) All of the other sides of the loading docks and teeming tables shall be guarded as required by § 1910.27 by a fall protection system meeting the requirements of § 1910.28.

(iii) Employers shall ensure that employees that may be exposed to fall hazards, are trained to recognize and avoid the hazards associated with this type of work such as, but not limited to, hot surfaces and securing trailers.

(5) *Qualified climbers.* As provided in § 1910.23(a)(2), ladders and step bolts on triangulation, telecommunication, electrical power towers and poles and similar structures, including stacks and chimneys, need not have ladder safety devices, cages or wells if only qualified climbers are permitted to use these ladders or step bolts. Such qualified climbers shall meet the following requirements:

(i) Qualified climbers shall be physically capable (demonstrated through observations of actual climbing activities or by a physical examination) of performing the duties which may be assigned to them;

(ii) Qualified climbers shall have successfully completed a training or apprenticeship program that covered hands-on training for the safe climbing of ladders or step bolts and shall be retrained as necessary to ensure the necessary skills are maintained;

(iii) The employer shall ensure through performance observations, and formal classroom or on-the-job training that the qualified climber has the skill to safely perform the climbing;

(iv) Qualified climbers shall have climbing duties as one of their routine work activities;

(v) Qualified climbers, when reaching their work position, shall be protected by a fall protection system meeting the requirements of § 1910.28.

Appendix A to Subpart D—Compliance Guidelines

Note: The following appendices to subpart D serve as nonmandatory guidelines to assist employers and employees in complying with these sections and to provide other helpful information. These appendices neither add to nor detract from the obligations contained in the OSHA standards.

Section 1910.22 General Requirements.

1. *Surface conditions.* The purpose of this section is to provide information to assist employers and employees to assure that walking and working surfaces are maintained free of hazards such as physical obstructions, debris, protruding nails or other fasteners or similar conditions, that could cause employees to slip, trip or fall.

Some hazards, such as snow, water, or ice, which by reason of recent weather or work operations may be present on workplace surfaces, present a slippery surface problem to employers. When these conditions cannot be eliminated completely, the employer can use alternatives such as slip-resistant footwear or handrails or stair rails to aid employees in maintaining their balance on the hazardous surfaces. Normally, slippery surfaces would occur only where snowfalls or freezing weather are of such frequency to make continued clearing or shoveling of workplace parking lots and sidewalks impractical, or where continuous use of water for washing down walking and working surfaces results in constantly slippery surfaces.

An effective housekeeping program may be used to minimize fall hazards where slippery surfaces are due to temporary or intermittent conditions. Absorbents can be used to clean up a spill where oily materials or corrosive liquids are accidentally spilled onto the floor.

2. *Slip-resistance.* A reasonable measure of slip-resistance is static coefficient of friction (COF). A COF of 0.5, which is based upon studies by the University of Michigan and reported in ''Work Surface Friction: Definitions, Laboratory and Field Measurements, and a Comprehensive Bibliography,'' is recommended as a guide to achieve proper slip-resistance. A COF of 0.5 is not intended to be an absolute standard value. A higher COF may be necessary for certain work tasks, such as carrying objects, pushing or pulling objects, or walking up or down ramps.

Slip-resistance can vary from surface to surface, or even on the same surface, depending upon surface conditions and employee footwear. Slip-resistant flooring material such as textured, serrated, or punched surfaces and steel grating may offer additional slip-resistance. These types of floor surfaces should be installed in work areas that are generally slippery because of wet, oily, or dirty operations. Slip-resistant type footwear may also be useful in reducing slipping hazards.

3. *Mobile equipment.* Mobile equipment operated in walkways or passageways creates a hazard to employees similar to any vehicular traffic. Appropriate warnings should be utilized to alert employees that mobile equipment is being used. Warning signs or mirrors can be used at intersections

of walkways or passageways. Flashing lights or audible devices can be mounted on vehicles to warn employees of the presence of vehicles.

Adequate clearance must be provided to permit safe use of walkways, passageways, and aisles by employees when mobile equipment is parked in walkways, passageways, or aisles, and left unattended. Attended means that the operator is within 25 feet (7.5 m) of the vehicle and can see it [*see* § 1910.178(m)(5)(ii)]. Normally, adequate clearance can be considered as a one-way free passage of 18 inches (46 cm) or greater. However, consideration should be given to the number of employees using the passage; whether traffic will be in both directions; and whether the passageway is part of a means of emergency egress. (See subpart E—Means of Egress for specific requirements.)

4. *Application of loads.* Floor loading limitations would be of greatest concern to those employers engaged in the warehousing or storage of goods and materials. Surfaces that should receive special attention so as not to be overloaded include ramps, lifting platforms, dockboards, scaffolds and ladders.

It is important that employees involved in materials handling be made aware of the loading limitations of any surface upon which they may work or walk. Floor loading of a work surface will vary according to the nature of the work performed. For example, a work surface used as an office would not need the continued control of floor loading that would be necessary if the space was used as a warehouse.

5. *Training.* Employees who are expected to inspect, maintain, and/or repair surfaces must be trained in the skills needed to perform their duties. They should also be aware of the strength of the materials with which they are working, and the load bearing capabilities of the equipment or surfaces they are expected to maintain.

Section 1910.23 Ladders

1. *Use of ladders.* Employees should be trained and retrained as necessary to use ladders in the manner for which the ladders were designed to be used. The majority of ladder accidents are apparently due to improper use, placement or selection. The reading and understanding of the hazard warnings and safety use instruction markings that are attached to recently manufactured portable ladders that meet the ANSI standards would be helpful in promoting employee safety.

A general guideline for proper ladder placement for non-self-supported portable ladders is to place the ladder so that the climber's hands would just touch the ladder when the arms are fully extended, and horizontal while the climber is standing straight facing the ladder with the climber's toes touching the side rails at the base of the ladder.

Employers should make sure that extensions placed on ladder siderails for leveling ladders during placement are installed so that the connectors are secured to the siderails and do not affect their strength. If the ladder is to be used for an extended period of time, it should be secured to the building or structure to prevent its accidental displacement. Employees should also be made aware that the use of individual sections of multisectional ladders as single ladders, and the use of self-supporting ladders in the non-self-supporting mode (*e.g.*, a step ladder folded up and leaned against a wall) is not a safe practice since the ladders are not designed for this use and may slip. Extension ladders need to be equipped with positive locking devices to lock the ladder at the desired climbing length before they may be used.

Employees should not climb ladders while carrying objects in their hands. They should maintain a firm hold on the rungs or siderails and have the necessary objects attached to their belt via straps or loops or have the objects hoisted up by the use of a line once they have reached their work position.

Section 1910.24 Step Bolts and Manhole Steps

1. *Step bolts.* Step bolts are bolts connected to poles, towers, or similar structures for use in ascending or descending to different levels. They are normally installed in an alternating pattern on opposite sides of the structural member to be climbed. They are seldom installed directly on opposite sides from one another, except to establish a standing or rest position, although this is an acceptable method of installation.

An effective maintenance program is required to assure the adequacy of step bolts. For example, over a period of extended use, bolts may become bent or otherwise damaged and thus be unsafe to use. Bolts should be checked to assure that they remain in proper position. Since step bolts also serve as hand grips during climbing, they should be kept free of puncture or laceration hazards. It is also important to check the point of anchorage to the structure. Often, due to changing climatic conditions, anchorage nuts may loosen, or fatigue cracks may appear. These are early signs of premature failure of a bolt, and they must not be ignored. These unsafe conditions should be corrected quickly by repair or replacement.

2. *Manhole steps.* Because of the varied environmental conditions found below ground in manhole structures, special consideration should be given to the type and strength of the materials used to manufacture the step, in order to ensure good service life.

Employees climbing through conical sections of manholes may have to climb in positions not normally used because of the design of the conical section. For example, the standards for ladders prohibit climbing ladders where the climbing side of the ladder exceeds 90 degrees from the horizontal. However, in conical sections, the design of the section may be such that climbing at angles exceeding 90 degrees may be necessary for a short distance. If ladder or step offsets or extensions cannot be installed to provide a straight climb, employees should be made aware of the hazards of climbing on the conical sections.

Rungs and steps should be corrugated, knurled, dimpled, coated with skid-resistant material, or otherwise treated to minimize the likelihood of slipping.

Section 1910.25 Stairs

Numerous hazards can cause an employee to trip, slip, or fall on stairs. Good housekeeping principles should be followed at all times. Unnecessary obstructions, debris, tools or other loose objects should be kept out of the stairway.

Where carpeting is used on stairs, special attention should be given to the pattern or design on the carpet because some carpet/rug patterns make it difficult to detect the leading edges of the stair tread. It may be necessary to highlight the leading edge of the stair with a different textured material.

If any repairs are necessary, and the work requires the use of tools and materials which would create a hazard, the stairs should be closed to employees until the repairs are made.

There should be adequate lighting on stairways when stairs are in use. Lighting should be maintained and a periodic inspection of stairs should be conducted to assure adequate lighting.

Stairs that may become wet or slippery as part of a work operation or as a result of weather conditions should be equipped with slip-resistant surfaces, such as a non-slip finish or an abrasive paint. To prevent shoes from slipping, exterior stairs should have landings and steps with surfaces that limit the collection of water.

The preferred slope for a stairway is between 30 and 35 degrees from the horizontal.

Figure D–1—Recommended Angles for Stairs, Ramps and Ladders

A—Ramps: 30° or less
B—Typical Fixed Stair: 50° or less
C—Ship Stairs: 50° to 70°
D—Alternating Tread Stairs: 50° to 70°
E—Ladders: 60° to 90°

BILLING CODE 4519–26–P

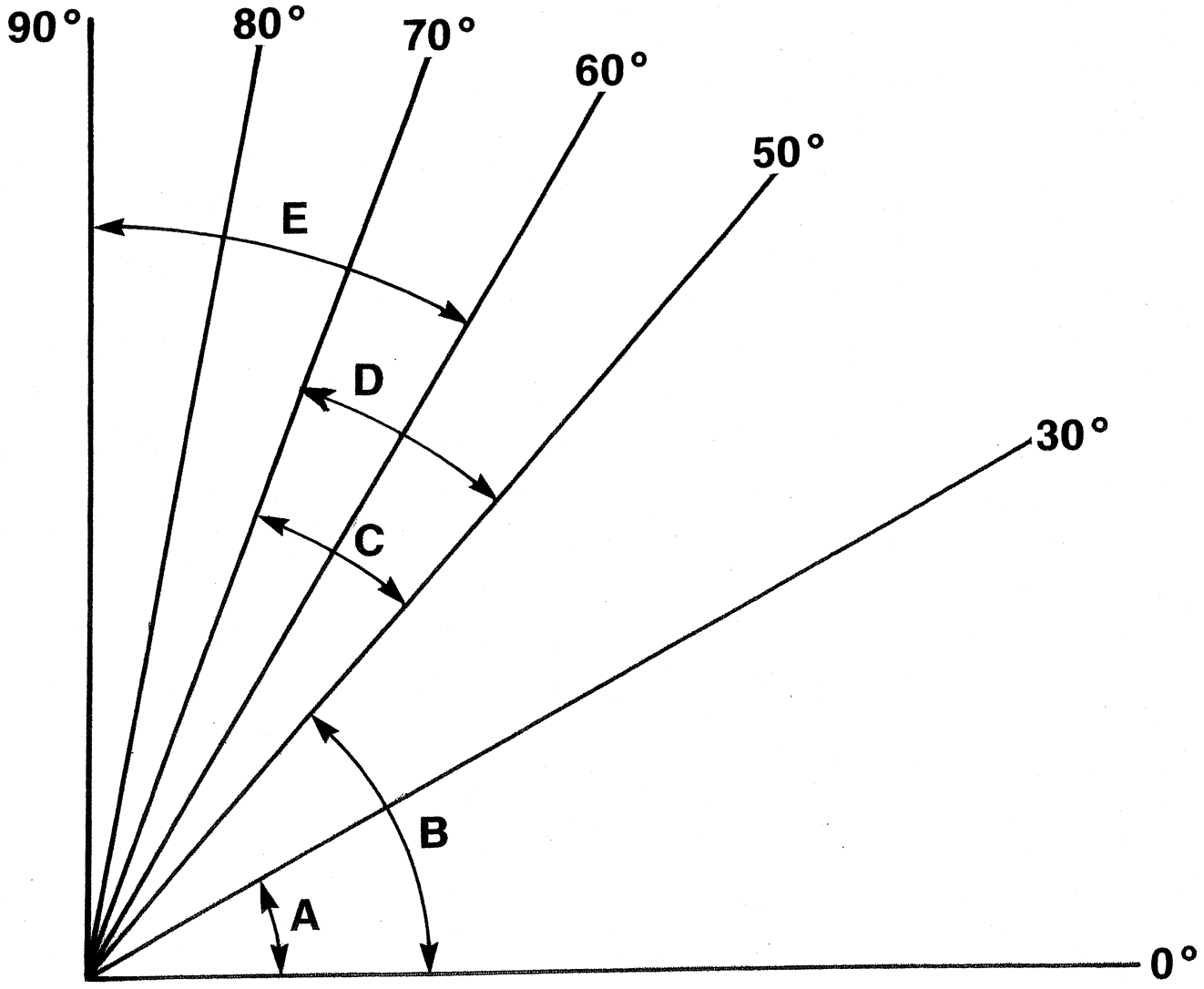

Figure D—1

Figure D—2 Typical Fixed Stair Steps

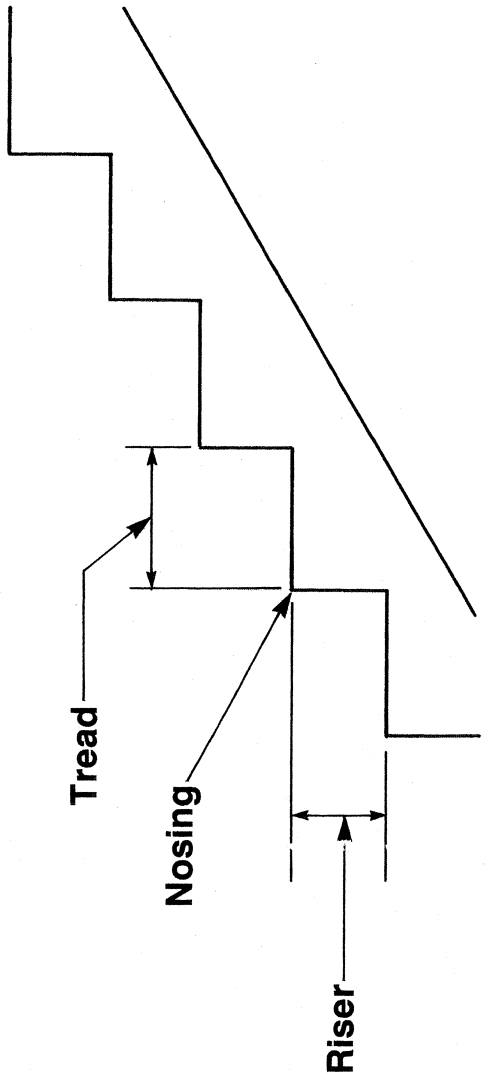

Dimensions of Typical Fixed Stair Steps:

Minimum Tread Width 22 in (55.9 cm)
Minimum Tread Depth 8 in (20.3 cm)
Riser Height 6½ in to 9½ in (16.5 cm to 24.1 cm)

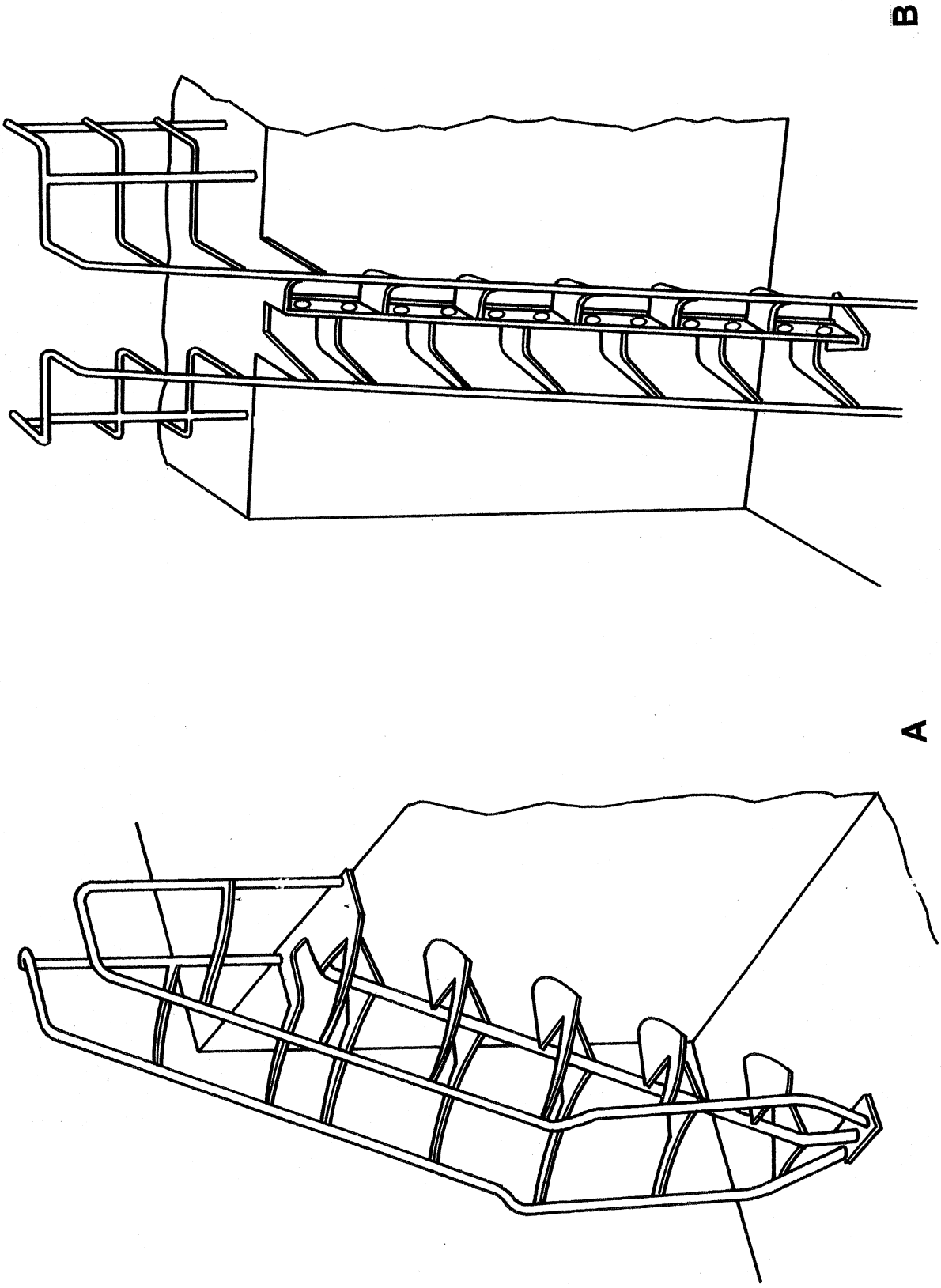

FIGURE D-3

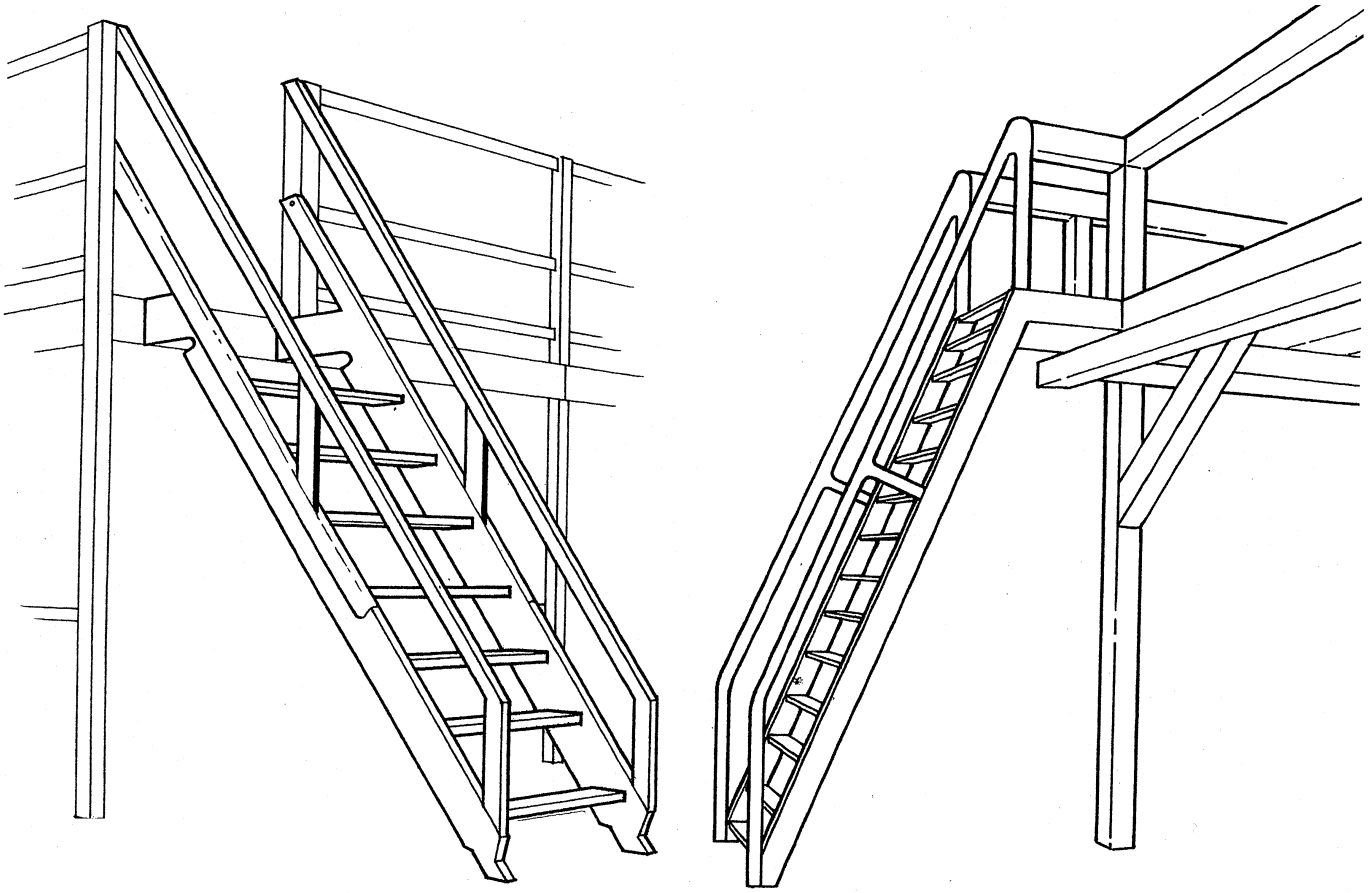

FIGURE D-4

BILLING CODE 4510–26–C

Section 1910.26 Ramps and Bridging Devices

1. *Preventing vehicles from running off the edge of ramps and bridging devices.* An acceptable method of preventing vehicles from running off the edges of ramps and bridging devices is to attach a curb or a run-off guard to the edge. ASME/ANSI MH14.1, ''Loading Dock Levelers and Dockboards,'' requires a curb or run-off guard to be at least two and three-fourths inches (70 mm) high.

2. *Designated walkway.* An acceptable method of clearly designating and separating walkways on ramps and bridging devices from the portion used for motorized vehicles would be to place curbing or a painted line between the walkway and the vehicle lane. A railing or similar barrier between the two passageways areas would also be acceptable.

3. *Safe means for handling portable ramps, and bridging devices.* Using powered industrial trucks or providing handholds for manual movement would be considered safe methods for handling ramps and bridging devices. If the device is to be moved manually, and the weight is such that more than one employee would be required to move it, then a sufficient number of handholds should be provided for the number of employees required to move it. Rollers may also be used to assist in moving.

4. *Preventing movement of vehicles.* Positive methods of preventing movement of a vehicle are to chock the wheels and use sand shoes on detached trailers.

Section 1910.27 Floors and Similar Surfaces

General requirements. Areas considered hazardous under § 1910.27 include floor openings, open floor perimeters, sky-lights, platform ledges, and similar structures. Acceptable methods for protecting employees from injury or death due to falling into or off of these exposures include guardrails, floor covers, safety gratings, safety nets, and body belts or harnesses used with lanyards. The employer is encouraged to utilize whatever device suits a specific hazard and which also meets the performance goal of fall prevention. Surfaces with slopes greater than 10 degrees from the horizontal need to be given special consideration when selecting the means of protecting employees from slips, trips, or falls. Factors that should be considered include the increased likelihood of a fall, the added momentum of the fall due to the effect of gravity, and the potential for an employee to fall or roll through the means of protection.

Acceptable means of protection for steep roofs may include body belts or harnesses and lanyards, safety nets, and catch platforms.

When a floor hole less than two inches (5 cm) in its least dimension constitutes a hazard to employees because of the type of employee footwear being worn, such as spiked heels, precautions such as covers for the hole, or other types of footwear should be used, or foot traffic should be restricted or diverted to another path.

Section 1910.28 Fall Protection Systems

1. *Purposes of guardrails, hand-rails, and stair rails.* A guardrail is used to protect employees from falling from the edge of a relatively flat surface. A stair rail is similar in function to a guardrail, its purpose being to protect employees from falling over the edge of an open-sided stairway. A handrail, however, is used to assist employees going up and down stairways, ramps or other walking and working by providing a handhold to grasp to avoid falling. It should be noted that this standard allows the functions of a handrail and stair rail to be combined into one unit, whereby the top rail

of the stair rail also serves as a handrail. The following are examples of the acceptable heights of each component installed on or after (*insert date 60 days after the effective date of the final rule in the* ***Federal Register***):

Guardrail: Minimum 39 inches (1 m). (Optimum height: 42 inches (1.11 m)).Stair rail: Minimum 36 inches (91 cm). (Optimum height: 42 inches (1.1 m)).

Handrail: 30 inches (76 cm) to 37 inches (94 cm) (Optimum height: 33 inches (84 cm)).

Combination stair rail/handrail: 36 inches (91 cm) to 37 inches (94 cm).

Ideally (but not required by this standard) an open-sided stairway should have a 42 inch (1.1 m) stair rail, with a 33 inch (84 cm) handrail mounted on it.

2. *Examples of acceptable guardrail components.* The guardrail criteria contained in § 1910.28 is performance-oriented, and provides the employer with many options in materials to use in designing and installing a guardrail system. The following are several examples of guardrail systems considered acceptable by OSHA:

A. *For wood railings:* The posts should be of at least two-inch by four-inch (5.1 cm by 10.2 cm) lumber spaced not to exceed eight feet (2.4 m); the top and intermediate rails should be at least two-inch by four-inch (5.1 cm by 10.2 cm) lumber. If the top rail is made of two one-inch by four-inch (5.1 cm by 10.2 cm) pieces of lumber nailed at right angles to one another, the posts should be spaced on eight-foot (2.4 m) centers, with a two-inch by four-inch (5.1 cm by 10.2 cm) intermediate rail. Selected wood components should be minimum 1500 lb-f/in^2 (1.03 kN/cm^2) fiber stress construction grade lumber. All dimensions refer to nominal sizes as provided by the American Softwood Lumber Standards.

B. *For pipe railings:* Posts, top rails and intermediate railings should have at least a one and one-half inch (3.8 cm) outside diameter. Posts should be spaced no more than eight feet (2.4 m) on centers.

C. *For structural steel railings:* Posts, top rails and intermediate rails should be of two inch by two inch by three-eighth inch (5.1 cm by 5.1 cm by 0.95 cm) angle iron or of other metal shapes with equivalent bending strength. Posts should be spaced not more than eight feet (2.4 m) on centers. Structural steel systems may also have posts of two inch by two inch by one-eighth inch (5.1 cm by 5.1 cm by 0.3 cm) angle iron spaced five foot (1.52 m) or less on center with 1–¾ inch by 1–¾ inch by 3/16 inch (4.4 cm by 4.4 cm by 0.5 cm) top rail and ¼ inch by one inch (0.64 cm by 2.54 cm) bar stock midrails.

Note: Railings subject to receiving heavy impacts from material-handling equipment or large numbers of employees should be provided with additional strength by using heavier stock, closer spacing of posts, additional bracing or the equivalent.

4. *Guardrails less than 39 inches (1.0 m).* The following are examples of acceptable guardrail systems where the height of the top edge of the guardrail may be reduced to as low as 30 inches (76 cm). Such alternatives could be used in hot-dip galvenizing operations or similar situations where employees need to work with hand tools over the guardrail system.

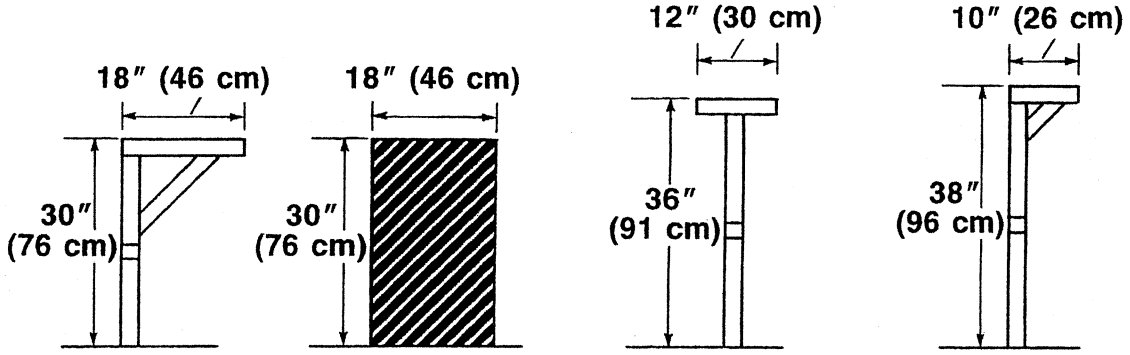

FIGURE D-5

5. *Openings in guardrails.* Openings in guardrails should be small enough to limit the spacing between guardrail members in any one direction to 19 inches (48 cm) or less. A 19 inch (48 cm) diameter ball or sphere can be used to measure spacing of irregularly shaped openings.

In the case of non-rigid guardrail systems, the opening criteria is considered met if the dimensions are proper while the system is not under load. If the size of the openings needs to be reduced, higher toeboards, wider midrails, multiple intermediate rails, perpendicular bars, x-bracing, panels, screen mesh, etc., can be used if they meet the strength, deflection, and permanent deformation requirements. This standard does not require midrails, provided the 19 inch (48 cm) requirement is met by some other way such as solid barriers, pickets, screening, *etc.* It should be noted that smaller openings may be required in areas used by the general public, and local building codes may require lesser dimensions.

6. *Surfaces of guardrails.* An acceptable top rail would be a smooth surface such as a pipe, with normal pipe fittings or a smoothly surfaced lumber component. Examples of unacceptable top rails would be rough surfaced lumber, small diameter wire, steel or plastic banding, and guardrails with protruding objects such as splinters, nails, or bolts—all of which could injure an employee's hand.

7. *Testing of guardrail and handrail systems.* In developing and performing tests for guardrail and handrail systems, it is recommended that the test force be applied to the top rail or midrail over an area not to exceed four inches (10.1 cm) by four inches (10.1 cm). In addition, the center of the applied force must be within two inches (5.1 cm) of the top edge of the top rail. The employer should exercise care in determining the most critical locations and directions in which to apply the force (such as a horizontal force at the midpoint of the top rail between supporting posts).

8. *Handrail height requirements.* (a) A diagram of how to measure the height of a handrail is as follows:

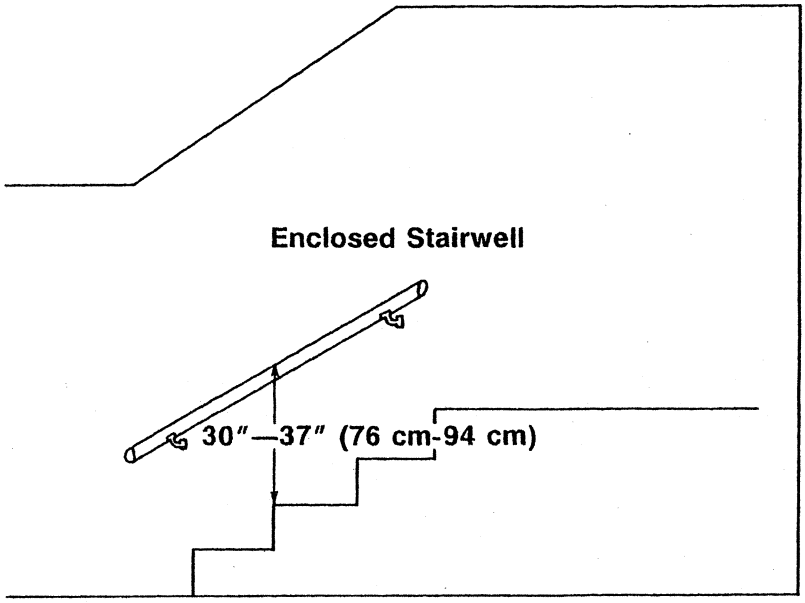

FIGURE D-6

(b) An example of the top member of a stair railing which also serves as the handrail is shown below.

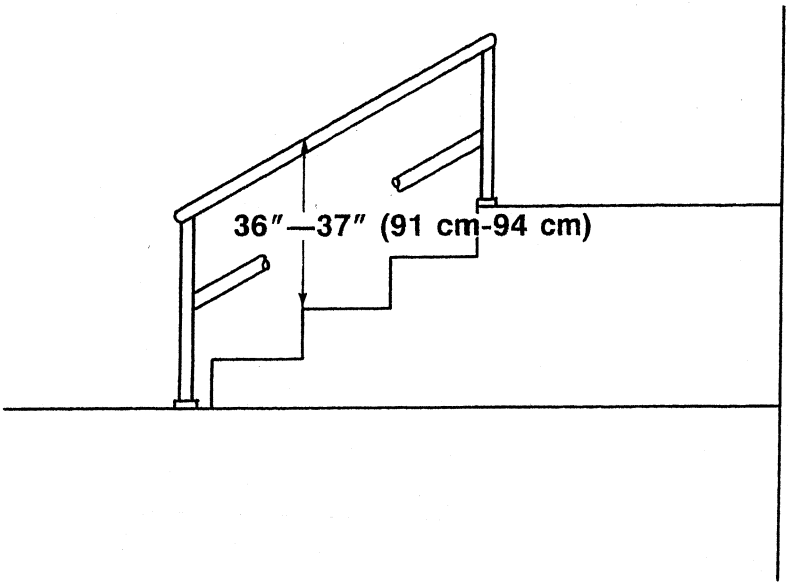

FIGURE D-7

9. *Handrail grip dimensions.* It is recommended that newly installed handrails be shaped and designed so that employees may use their hand grip to their best advantage. These designs permit the fingers to curl around the handrail to provide a firmer grip. The following are examples of acceptable handrail dimensions used to maximize an employee's grip.

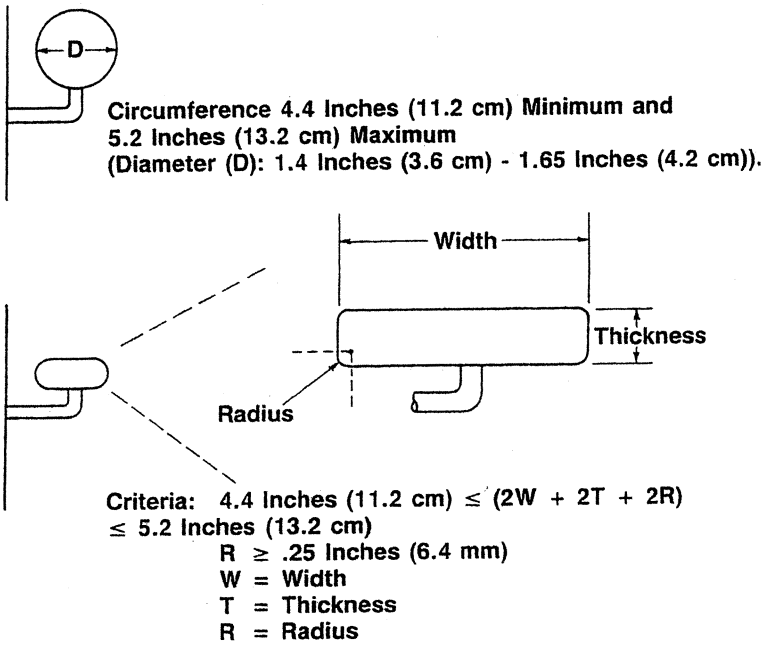

FIGURE D-8

10. *Designated area visibility criteria.* One method for meeting the visibility criteria for designated areas is to place a flag made of high visibility material on the rope, or wire or chain at not more than six foot (1.8 m) intervals.

11. *Openings in safety nets.* The following is a diagram of the maximum opening in a safety net.

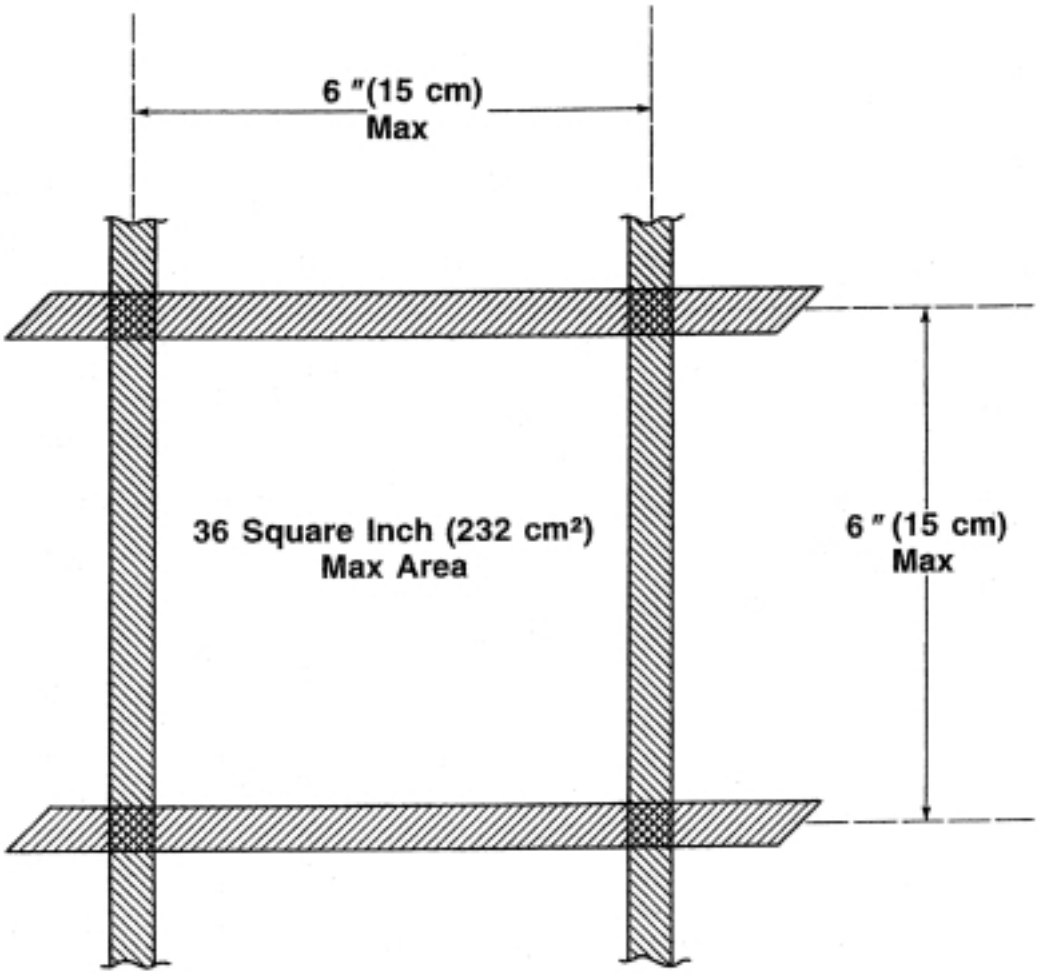

FIGURE D-9

12. *Safety net construction.* Unduly rigid material should not be used in the construction of safety nets. The use of such material could cause injuries due to the shock of a sudden stop. Elastic type materials such as nylon should be used instead of materials such as manila rope or wire rope.

13. *Safety net testing.* Most safety net designs are tested by the manufacturer. These tests are conducted on sample net panels in accordance with ANSI A10.11, ''American National Standard Minimum Requirements for Safety Nets.'' Such testing assures the user of a suitable product. Since nets are installed in a wide variety of configurations, and provisions for proper attachments to the structure must be decided upon for each job site, each safety net installation should be tested at the work site. Such testing, as provided by the standard, consists of dropping a 400 pound (180 kg) bag of sand, 30 ± 2 inches (76 ± 5 cm) in diameter into the net from the highest work level to be protected by the net. Consideration should be given to testing the most critical portion of the net installation. In some cases a test at the job site may not be feasible, or it may expose employees and/or the general public to danger. In these cases the net installation must be certified to be safe by a qualified person.

Section 1910.29 Wall Openings

Wall openings are required to be protected to prevent employees from falling into or through the wall openings, and to prevent tools or other materials from falling onto employees below. Examples of acceptable systems for guarding are screens, barriers, rails, guardrail systems, and half doors. These guards may be removable or hinged if access to the wall opening is necessary.

Windows on a stairway, landing, floor, platform, balcony, and other location could also be guarded by slats, grill work or other types of protection. Glass walls are not considered wall openings.

Section 1910.30 Scaffolds

1. *General overview.* Section 1910.30 is not intended to require the building of scaffolds either in a specific manner or using a specific material. Scaffolds used in general industry are also used in the construction industry, and since they are essentially the same scaffolds, the requirements for similar types of scaffolds are essentially the same for the two industries. Therefore, if scaffolds meet the general industry standards they would meet the construction standards, and vice versa. Only the more common types of scaffolds that are used in general industry are specifically regulated by § 1910.30. If a particular type of scaffold is not covered in § 1910.30, the applicable requirements for the scaffold in 29 CFR Part 1926, subpart L, are to be followed.

2. *Overhead protection.* Overhead protection can range from the wearing of hardhats by employees to full overhead planking, depending on the type of objects that can fall onto employees working on scaffolds.

3. *Lumber sizes.* Unless otherwise noted, stated lumber sizes are nominal. Nominal sizes refer to lumber sizes prior to dressing, as well as after dressing, even though the actual size of a piece of dressed lumber is

less than its rough cut size. An example of nominal size would be a 2 x 4 inch (51 x 102 mm) piece of lumber. Traditionally, the lumber would be rough cut to 2 x 4 inches (51 x 102 mm). After dressing, the actual size is appropriately 1½ x 3½ inches (38 x 89 mm). Both the rough 2 x 4 inches (51 x 102 mm) and the dressed 1½ x 3½ inches (38 x 89 mm) lumber would be considered a nominal 2 x 4 inches (51 x 102 mm) size. Lumber References to lumber are not meant to limit the employer to the use of wood. The use of any material of equal or greater strength and durability is acceptable.

4. *Suspension rope.* Suspension ropes need to be visually inspected each day or each shift before use, and also when the rope has not been in use for prolonged periods, or after exposure to detrimental elements such as open flames, hot work, and corrosive chemicals. Proper service such as washing and treating rope after being exposed to adverse conditions, lubricating wire rope, and removing defective sections of rope, may be necessary to keep the rope in safe operating condition. Examples of defective rope include rope where there is severe localized abrasion or scraping; where there is evidence of heat damage; where there is a loss of more than one-third of the original diameter of the outside individual wires; or where there is kinking, crushing, bird caging, or other damage resulting in distortion of the rope structure.

5. *Nails used on scaffolds.* Nails used to construct scaffolds should be driven full length, and should not be subjected to straight pulls.

6. *Snow and ice removal.* OSHA recommends that employees involved in removing snow and ice from scaffolds be protected from falls with body belts or harnesses and lanyards even though guardrails may be provided.

7. *Protecting employees below scaffolds.* Acceptable means of protecting employees below scaffolds from falling objects would include the installation of toeboards or the installation of a screen extending along the entire platform opening between the platform and the guardrail. The screen should consist of No. 19 gauge or heavier U.S. Standard wire, with one-half inch (1.2 cm) or smaller mesh or the equivalent. The use of other types of material such as plywood or expanded metal would also be acceptable.

8. *Tables.* The tables in this appendix relative to scaffolds are based on all load carrying timber members of the scaffold being a minimum of 1,500 lb-f/in^2 (1.03 kN/cm^2) stress or construction grade lumber. All dimensions are nominal sizes as provided in the American Softwood Lumber Standards, dated January 1970. Except where otherwise noted, only rough or undressed lumber of the size specified will satisfy the minimum requirements of this standard.

9. *Wood planking.* All wood planking selected for scaffold plank use should be graded by rules established by the recognized independent inspection agency for the species of wood used. The maximum permissible spans for 2 x 10 inch (nominal) or 2 x 9 inch (rough) solid sawn wood planks should be as shown in the following table:

Maximum intended load (lb/ft^2)	Maximum permissible span using full thickness undressed lumber (ft)	Maximum permissible span using nominal thickness lumber (ft)
25 (122 kg/m^2)	10 (3 m)	8 (2.4 m)
50 (244 kg/m^2)	8 (2.4 m)	6 (1.8 m)
75 (366 kg/m^2)	6 (1.8 m).	

The minimum permissible span for 1¼ x 9 inch (3.2 x 22.9 cm) or wider wood plank of full thickness with a maximum intended load of 50 lb/ft^2 (244 kg/m^2) should not exceed four feet (1.2 m).

10. *Fabricated planks and platforms.* Fabricated planks and platforms may be used in lieu of solid sawn wood planks. Maximum spans for such units should be as recommended by the manufacturer based on the maximum intended load being calculated as follows:

Rated load capacity	Maximum intended load
Light-duty	25 lb/ft^2 (122 kg/m^2) applied uniformly over the entire span area.
Medium-duty	50 lb/ft^2 (244 kg/m^2) applied uniformly over the entire span area.
Heavy-duty	75 lb/ft^2 (366 kg/m^2) applied uniformly over the entire span area.
One-person	250 pounds (113 kg) placed at the center of the span [total 250 pounds (113 kg)].
Two-person	250 pounds (113 kg) placed 18 inches (46 cm) to the left and right of the center of the span [total 500 pounds (227 kg)].
Three-person	250 pounds (113 kg) placed at the center of the span and 250 pounds (113 kg) placed 18 inches (46 cm) to the left and right of center of the span [total 750 pounds (340 kg)].

Note: Platform units used to make scaffold platforms intended for light-duty use should be capable of supporting at least 25 lb/ft^2 (122 kg/m^2) applied uniformly over the entire unit-span area, or a 250 pound (114 kg) point load placed on the unit at the center of the span, whichever load produces the greater shear force.

11. *Plank-type platform.* An example of an acceptable plank-type scaffold platform would be a platform composed of not less than nominal 2 x 8 inch (7.6 x 20 cm) unspliced planks, properly cleated together on the underside, starting six inches (15.2 cm) from each end. Intervals between each cleat should not exceed 4 feet (1.2 m).

12. *Access.* Acceptable safe access to scaffold platforms could include one or more of the following:

(i) Ladders conforming to the requirements of § 1910.23. The ladders should not be placed in a manner to endanger employees on the scaffold.

(ii) Hook-on or attachable metal ladders specifically designed for use in conjunction with manufactured types of scaffolds.

(iii) Direct access from adjacent scaffolds, structures or personal hoists.

(iv) Ramps or runways and appropriate fall protection systems where applicable.

(v) Internal prefabricated scaffold rungs specifically designed by the manufacturer for use as a ladder.

(vi) Step or stair-type accessories such as ladder stands specifically designed for use with scaffolds.

13. *Counterweights.* The counterweights for suspension scaffolds should be solid, dead weight objects designed so that they will not lose their mass. Examples that may be used are: concrete blocks, steel plates or other non-flowable material.

14. *Body harnesses.* OSHA recommends that full body harnesses be used by employees instead of body belts. When subjected to an actual drop, the body harness distributes the shock more evenly over the body than does the body belt.

15. *Supplementary platform support lines.* Supplementary platform support lines may be used as points of attachments for personal fall protection systems on suspension scaffolds since they act as backups for the primary support lines. In effect, the supplementary platform support lines serve as lifelines for the employees and do not make it necessary to require additional lifelines.

16. *Securing two-point suspension scaffolds.* In addition to direct connection to structures or buildings (except window cleaners' anchors) acceptable ways to prevent scaffold sway would include the use of angulated roping or static lines. Angulated roping is a system of platform suspension in which the upper wire rope sheaves or suspension points are closer to the plane of the structure or building face than the corresponding attachment points on the platform, thus causing the platform to press against the face of the structure or building. Static lines are independent lines secured at their top and bottom ends which are closer to the plane of the structure or building face than the outermost edge of the platform. By drawing the static lines taut, the platform is pushed against the face of the structure or building.

17. *Boatswains' chairs.* An acceptable size and strength for a boatswains' chair would be one made out of one inch (2.5 cm) or thicker wood with a 9 by 17 inch (22.9 by 43.2 cm) seat reinforced by cleats, and with bridle ropes passing through the seat and cleats and crossing diagonally beneath the seat. Seats smaller than 9 by 17 inches (22.9 by 43.2 cm) may be used when access to the work area or the work area itself necessitates a smaller boatswains' chair. Chairs may be made of materials other than wood provided they provide at least the same amount of safety as the wood chairs.

18. *Boatswains' chair rope.* An acceptable rope to be used with a boatswains' chair would be one-half inch (1.2 cm) nylon or

polyester rope. Manila rope is not recommended because of its low strength, and susceptibility to deterioration that is difficult to detect by inspection.

Section 1910.31 Mobile work platforms, ladder stands, and powered industrial truck platforms.

1. *Mobile work platforms and ladder stands.* Although not required by this standard, it is recommended that the employer insist on test data or a certification from manufacturers to assure that the mobile work platforms and ladder stands which the employer purchases meet the requirements of this standard.

2. *Safe operating instructions.* It is recommended that mobile elevating work platforms have instructions for safe operation displayed in a permanent and visible location, with at least the following information:

(i) Warnings, cautions, or restrictions for safe operation.

(ii) Make, model, serial number, and manufacturer's name and address.

(iii) Rated work load.

(iv) Maximum platform height.

(v) Normal voltage rating of the batteries if battery powered, or line voltage if A.C. powered.

(vi) Alternate statement of configurations and rated capacities, if applicable.

(vii) The level of electrical insulation of the work platform, if any.

3. *Standing and climbing on mobile work platforms.* Only systems that are specifically designed by a qualified person to be used with devices to increase working heights should be used when additional height is necessary. It is also recommended that when employees are climbing or descending work platforms, both hands be free to aid in climbing. Tools should be worn on a work belt or hoisted up and down by a line after the worker reaches the work position.

4. *Increasing platform heights.* Acceptable means, other than outriggers, that allow increasing the platform height of mobile ladder stands and platforms could include securing the units with chains or ropes to stabilize the units from tipping. The chains or ropes would have to have sufficient strength to hold the unit and the weight of the employee(s) as well as any other object that may be placed on it.

Section 1910.32 Special Surfaces

1. *Training.* Training is an important factor for employee safety on all special work surfaces. As a minimum, the employer should institute a training program for employees to recognize and avoid the special hazards involved with the particular surface. Training should be conducted to give the employee a better understanding of the actual working conditions and hazards related to the specific hazard. Retraining may be necessary if an employee has been away from one of these activities for a prolonged period of time.

2. *Repair pits and assembly pits.* Repair pits and assembly pits are not only applicable to cars, trucks, and buses, but are also applicable to locomotives, subway and railroad cars and other operations where employees enter a pit and work on overhead objects. The use of a combination of floor markings and stanchions may be used around the exposed edges of the pits provided the overall system is continuous. Warning signs, if used to restrict entry to the pit area, do not necessarily need to be posted at the pit but may be posted in conspicuous locations around the pit area.

3. *Slaughtering facilities.* Acceptable alternative fall protection systems that can be used in slaughtering facilities instead of toeboards to prevent employee's from falling off the open side of the work platform would include the use of safety belts or harnesses and lanyards meeting the requirements of subpart I.

4. *Working sides of loading racks, loading docks, teeming tables, and similar locations.* Even though the working sides of loading racks, loading docks, teeming tables, and similar locations are exempt from the requirements of § 1910.27, it is recommended that safety belts or harnesses, or other fall protection be used whenever possible.

5. *Qualified climbers.* The qualified climber's physical condition should be such that climbing exercise will not impair health and safety. This ability can be determined by physical performance tests. A physical examination by a physician who is aware of the duties that the employee is expected to perform is acceptable. Successful completion of a training program for the type of structures that are to be climbed will also be considered as proof of the climber's physical capabilities.

It is recommended as a minimum that the training program for qualified climbers consist of classroom training and climbing training. The classroom training should consist of information on the structural characteristics, the types and significance of using safety equipment and the procedures for safe climbing. It should also include discussions of the risks involved with climbing structures and the activities to be performed on the structure, as well as discussions of emergency procedures, accident causes, and factors such as bad weather that tend to increase the risks involved in climbing.

Climbing training should consist of classroom type instruction followed by the individual observing an experienced climber performing one or more climbs on the type of structure for which the individual is being trained to climb. Actual climbing during training should be initiated under close supervision and with the use of redundant safety equipment. The rate of reduction in supervision and the use of safety equipment will be a matter of subjective judgment by the trainer. Climbers should only be permitted to work without fall protection once the employee has demonstrated the necessary ability and skill in climbing structures without fall protection.

Appendix B to Subpart D—National Consensus Standards

Note: The following appendix to subpart D serves as a nonmandatory guideline to assist employers and employees in complying with these sections and to provide other helpful information. This appendix neither adds to nor detracts from the obligations contained in the OSHA standard.

The following table lists the current national consensus standards which contain information and guidelines that would be considered acceptable in complying with the requirements in the specific sections of subpart D, to the extent that they do not conflict with the standard.

Subpart D	National consensus standard
§ 1910.23	ANSI A14.1, American National Standard for Safety Requirements for Portable Wood Ladders.
	ANSI A14.2, American National Standard for Safety Requirements for Portable Metal Ladders.
	ANSI A14.3, American National Standard for Safety Requirements for Fixed Ladders.
	ANSI A14.4, American National Standard for Safety Requirements for Job-Made Ladders.
	ANSI A14.5, American National Standard for Safety Requirements for Portable Reinforced Plastic Ladders.
§ 1910.24	ASTM C478, American Society for Testing and Materials Specifications for Precast Reinforced Concrete Manhole Sections.
	ASTM A394, American Society for Testing and Materials Specifications for Quenched and Tempered Alloy Steel Bolts, Studs, and Other Externally Threaded Fasteners.
§ 1910.25	ANSI A64.1, American National Standard for Requirements for Fixed Industrial Stairs.
	ANSI/IES RP7, American National Standard Practice for Industrial Lighting.
§ 1910.26	ANSI MH14.1, American National Standard for Industrial Loading Dock Levelers and Dockboards.
§ 1910.27	ANSI A58.1, American National Standard for Minimum Design Loads for Buildings and Other Structure.
	ANSI A12.1, American National Standard for Safety Requirements for Floor and Wall Openings, Railings, and Toeboards.

Subpart D	National consensus standard
§ 1910.28	ANSI A10.11, American National Standard for Safety Nets Used During Construction, Repair, and Demolition Operations. ANSI A10.14, American National Standard for Requirements for Safety Belts, Harnesses, Lanyards, Lifelines, and Drop Lines for Construction and Industrial Use. ANSI A12.1, American National Standard for Safety Requirements for Floor and Wall Openings, Railings, and Toeboards. ANSI A39.1, American National Standard for Safety Requirements for Window Cleaning.
§ 1910.29	ANSI Al2.1, American National Standard for Safety Requirements for Floor and Wall Openings, Railings, and Toeboards.
§ 1910.30	ANSI A92.1, American National Standard for Manually Propelled Mobile Ladder Stands and Scaffolds (Towers). ANSI A10.8, American National Standard for Safety Requirements for Scaffolds.
§ 1910.31	ANSI A92.3, American National Standard for Manually Propelled Elevating Work Platforms. ANSI A92.1, American National Standard for Manually Propelled Mobile Ladder Stands.
§ 1910.32	None.

Appendix C to Subpart D—References for Further Information

Note: The following appendix to subpart D serves as a nonmandatory guideline to assist employers and employees in complying with these sections and to provide other helpful information. This appendix neither adds to nor detracts from the obligations contained in the OSHA standards.

The following references provide information which may be helpful in understanding and implementing these standards.

I. General References

A. ''Accident Prevention Manual for Industrial Operations''; National Safety Council, 444 North Michigan Avenue, Chicago, Illinois 60611.

B. ''The BOCA Basic Building Code''; Building Officials and Code Administrators; Inc., 1313 East 60th Street, Chicago, Illinois 60637.

C. ''Southern Standard Building Code''; Southern Building Code Congress, 1116 Brown-Marx Building, Birmingham, Alabama 35203.

D. ''Uniform Building Code Standards, Volume 1''; International Conference of Building Officials, 50 South Los Robles, Pasadena, California 91101.

E. ''A History of Walkway Slip-Resistance Research at the National Bureau of Standards'', Special Publication 565; National Bureau of Standards, National Technical Information Service, Springfield, Virginia 22151.

F. ''A New Portable Tester for the Evaluation of the Slip-Resistance of Walkway Surfaces'', Technical Note 953; National Bureau of Standards, National Technical Information Service, Springfield, Virginia 22151.

G. Miller, James *et al.* ''Work Surface Friction: Definitions, Laboratory and Field Measurements, and a Comprehensive Bibliography''; The University of Michigan, Ann Arbor, Michigan 48109. NTIS *PB 83–243634, PE 83–243626, PB 84–175926).

H. Chaffin, Don B. *et al.* ''An Ergonomic Basis for Recommendations Pertaining to Specific Sections of OSHA Standard, 29 CFR Part 1910, subpart D—Walking and Working Surfaces''; The University of Michigan, Ann Arbor, Michigan 48109.

I. ''Accident Facts-1987 Edition''; National Safety Council, 444 North Michigan Avenue, Chicago, Illinois 60611.

J. Snyder, Richard G. ''Occupational Falls''; The University of Michigan, Ann Arbor, Michigan 48109.

K. ''Occupational Fatalities Related to Roofs, Ceilings and Floors as Found in Reports of OSHA Fatality/Catastrophe Investigations''; U.S. Department of Labor, Office of Statistical Studies and Analysis, 200 Constitution Avenue, N.W., Washington, D.C. 20210.

L. Ayoub, M. and Gary M. Bakken. ''An Ergonomic Analysis of Selected Sections in Subpart D, Walking/Working Surfaces''; Texas University, Lubbock, Texas 79409.

M. ''An Overview of Floor-Slip-Resistance Research with Annotated Bibliography'', Technical Note 895; National Bureau of Standards, National Technical Information Service, Springfield, Virginia 22151.

N. ''Occupational Fatalities Related to Miscellaneous Working Surfaces as Found in Reports of OSHA Fatality/Catastrophe Investigations''; U.S. Department of Labor, Office of Statistical Studies and Analysis, 200 Constitution Avenue, NW., Washington, DC 20210.

O. ''A Bibliography of Coefficient of Friction Literature Relating to Slip Type Accidents''; Department of Industrial and Operations Engineering, College of Engineering, University of Michigan, Ann Arbor, Michigan 48104.

P. ''Falls from Elevations Resulting in Injuries''; U.S. Department of Labor, Bureau of Labor Statistics, National Technical Information Service, Springfield, Virginia 22151.

II. Ladder References

A. Chaffin, Don B. and Terrence J. Stobbe. ''Ergonomic Considerations Related to Selected Fall Prevention Aspects of Scaffolds and Ladders as Presented in OSHA Standard 29 CFR Part 1910 Subpart D''; The University of Michigan, Ann Arbor, Michigan 48104.

B. ''Occupational Fatalities Related to Ladders as Found in Reports of OSHA Fatality/Catastrophe Investigations''; U.S. Department of Labor, Office of Statistical Studies and Analysis, 200 Constitution Avenue, N.W., Washington, DC 20210.

C. ''Survey of Ladder Accidents Resulting in Injuries''; U.S. Department of Labor, Bureau of Labor Statistics, National Technical Information Service, Springfield, Virginia 22151.

D. ''Five Rules for Ladder Safety''; National Safety Council, 444 North Michigan Avenue, Chicago, Illinois 60611.

E. ''A Consumer's Guide to Safe Ladder Selection Care and Use''; U.S. Consumer Product Safety Commission, Washington, DC 20207.

F. ''Portable Ladders''; Data Sheet 1–665–Rev. 82; National Safety Council, 444 North Michigan Avenue, Chicago, Illinois 60611.

G. ''Safety Instructions for the Person Who Climbs to Work, the Care and Use of Fiberglass Ladders''; R. D. Werner Co., Inc., PO Box 580, Greenville, Pennsylvania 16125.

III. Stair References

A. Archea, John *et al.* ''Guidelines for Stair Safety''; NBS Building of Science Series 120, National Bureau of Standards, National Technical Information Service, Springfield, Virginia 22151.

B. Carson, D. H. *et al.* ''Safety on Stairs''; National Bureau of Standards, National Technical Information Service, Springfield, Virginia 22151.

C. Nelson, Gary S. ''Engineering-Human Factors Interface in Stairway Treadriser Design''; Texas A & M University of Texas Agricultural Extension Service, College Station, Texas 77843.

IV. Scaffold References

A. ''Occupational Fatalities Related to Ladders as Found in Reports of OSHA Fatality/Catastrophe Investigations''; U.S. Department of Labor, Office of Statistical Studies and Analysis, 200 Constitution Avenue, NW., Washington, DC 20210.

B. ''Analysis of Scaffolding Accident Records and Related Employee Casualties'', NBSIR 79–1955; National Bureau of Standards, National Technical Information Service, Springfield, Virginia 22151. (NTIS *PB 80–161466).

C. ''Scaffold Accidents Resulting in Injuries''; U.S. Department of Labor, Bureau of Labor Statistics, Washington, DC 20210.

D. ''Ergonomics Considerations Related to Selected Fall Prevention Aspects of Scaffolds and Ladders as Presented in OSHA Standard 29 CFR Part 1910 Subpart D''; The University of Michigan, Ann Arbor, Michigan 48104.

E. ''Selected Occupational Fatalities Related to Powered, Two-Point Suspension Scaffolds/Powered Platforms as Found in

Reports of OSHA Fatality/Catastrophe Investigations''; U.S. Department of Labor, Office of Statistical Studies and Analysis, 200 Constitution Avenue, NW., Washington, DC 20210.

V. Fall Protection References

A. ''A Study of Personal Fall-Safety Equipment'', NBSIR 76–1146; National Bureau of Standards, National Technical Information Service, Springfield, Virginia 22151.

B. ''Guardrails for the Prevention of Occupational Accidents'', NBSIR 76–1132; National Bureau of Standards, National Technical Information Service, Springfield, Virginia 22151.

C. Investigation of Guardrails for the Protection of Employees from Occupational Hazards, NBSIR 76–1139; National Bureau of Standards, National Technical Information Service, Springfield, Virginia 22151.

D. A Model Performance Standard for Guardrails, NBSIR 76–1131; National Bureau of Standards, National Technical Information Service, Springfield, Virginia 22151.

* National Technical Information Services (NTIS), Port Royal Rd., Springfield, Virginia 22151, Phone: (703) 487–4650.

3. The authority citation for subpart F of part 1910 is proposed to be revised as follows:

Authority: Secs. 4, 6, 8, Occupational Safety and Health Act of 1970 (29 U.S.C. 653, 655, 657); Secretary of Labor's Order No. 12–71 (36 FR 8754), 8–76 (41 FR 25059) 9–83 (48 FR 35736) or 1–90 (55 FR 9033), as applicable.

Sections 1910.67 and 1910.68 also issued under 29 CFR part 1911.

4. In § 1910.67, paragraph (c)(2)(v) would be revised to read as follows:

§ 1910.67 Vehicle-mounted elevating and platforms.

* * * * *

(c) * * *

(2) * * *

(v) A personal fall protection system which complies with subpart I of this part shall be worn and attached to the boom or basket when working from an aerial lift.

* * * * *

5. In § 1910.68, paragraph (b)(4),(b)(8)(ii) and (b)(12) would be revised to read as follows:

§ 1910.68 Manlifts.

* * * * *

(b) * * *

(4) References to other codes and subparts. The following codes, and subparts of this part, are applicable to this section. Safety Code for Mechanical Power Transmission Apparatus ANSI B15.1–1953 (R 1958) and subpart O; subpart S; and subpart D.

* * * * *

(8) * * *

(ii) Construction. The rails shall be standard guardrails with toeboards meeting the provisions in subpart D of this part.

* * * * *

(12) Emergency exit ladder. A fixed metal ladder accessible from both the ''up'' and ''down'' run of the manlift shall be provided for the entire travel of the manlift. Such escape ladders shall comply with subpart D of this part.

* * * * *

6. The authority citation for subpart N of part 1910 is proposed to be revised as follows:

Authority: Secs. 4, 6, 8, Occupational Safety and Health Act of 1970 (29 U.S.C. 653, 655, 657); Secretary of Labor's Order No. 12–71 (36 FR 8754), 8–76 (41 FR 25059) 9–83 (48 FR 35736), or 1–90 (55 FR 9033), as applicable.

Sections 1910.179 also issued under 29 CFR part 1911.

7. In § 1910.179, paragraph (c)(2) would be revised to read as follows:

§ 1910.179 Overhead and gantry cranes.

* * * * *

(c) * * *

(2) Access to crane. Access to the car and/or bridge walkway shall be by a conveniently placed fixed ladder, stairs, or platform requiring no step over any gap exceeding 12 inches (30.5 cm). Fixed ladders shall be in conformance with subpart D of this part.

* * * * *

8. The authority citation for subpart R of part 1910 is proposed to be revised as follows:

Authority: Secs. 4, 6, 8, Occupational Safety and Health Act of 1970 (29 U.S.C. 653, 655, 657); Secretary of Labor's Order No. 12–71 (36 FR 8754), 8–76 (41 FR 25059) 9–83 (48 FR 35736) or 1–90 (55 FR 9033), as applicable.

Sections 1910.261, 1910.265, and 1910.268 also issued under 29 CFR part 1911.

9. In § 1910.261, paragraphs (a)(3)(ii), (a)(3)(iv), (a)(3)(v) and (a)(3)(vi) would be removed.

10. Paragraphs (b)(3), (c)(3)(i), (c)(15)(ii), (e)(4), (g)(2)(iii), (g)(8), (g)(13)(i), (h)(1), (j)(4)(ii), (j)(4)(iv), (j)(5)(i), (k)(6), (k)(13)(i) and (k)(15) of § 1910.261 would be revised to read as follows:

§ 1910.261 Pulp, paper and paperboard mills.

* * * * *

(b) * * *

(3) Floors and platforms. Floors, platforms, and work surfaces shall be maintained in accordance with subpart D of this part.

* * * * *

(c) * * *

(3) * * *

(i) Ladders and gangplanks with railings to boat docks shall comply with subpart D of this part, and shall be securely fastened in place.

* * * * *

(15) * * *

(ii) Where conveyors cross passageways or roadways, a horizontal platform shall be provided under the conveyor, extended out from the sides of the conveyor a distance equal to one and one-half times the length of the wood handled. The platform shall extend the width of the road plus two feet (.61 m) on each side, and shall be kept free of wood and rubbish. The edge of the platform shall be provided with toeboards or other protection to prevent wood from falling, in accordance with subpart D of this part.

* * * * *

(e) * * *

(4) Runway to the jack ladder. The runway from the pond or unloading dock to the table shall be protected with standard handrails and toeboards. Inclined portions shall have cleats or equivalent nonslip surfacing, and shall be in accordance with subpart D of this part. Protective equipment shall be provided for persons working over water.

* * * * *

(g) * * *

(2) * * *

(iii) The worker shall be provided with eye protection, a supplied air respirator and a personal fall protection system meeting the requirements of subpart I of this part during inspection, repairs or maintenance of acid towers. The line shall be extended to an attendant stationed outside the tower opening.

* * * * *

(8) Chip and sawdust bins. Steam or compressed-air lances, or other devices, shall be used for breaking down the arches caused by jamming in chip lofts. No workers shall be permitted to enter a bin unless provided with an attached personal fall protection system meeting the requirements of subpart I of this part, and with an attendant stationed at the bin.

* * * * *

(13)(i) Blow-pit openings preferably shall be on the side of the pit instead of on the top. Openings shall be as small as possible when located on top, and shall be provided with railings, in accordance with subpart D of this part.

* * * * *

(h) * * *

(1) Bleaching engines. Bleaching engines, except the Bellmer type, shall be completely covered on the top, with the exception of one small opening large enough to allow filling, but too small to admit an employee. Platforms leading from one engine to another shall have standard guardrails in accordance with subpart D of this part.

* * * * *

(j) * * *

(4) * * *

(ii) Guardrails shall be provided around beaters where tub tops are less than 42 inches (1.06 m) from the floor, in accordance with (b)(3) of this section and subpart D of this part.

* * * * *

(iv) When beaters are fed from the floor above, the chute opening, if less than 42 inches (1.06 m) from the floor, shall be provided with a guardrail system meeting the requirements of subpart D of this part or other equivalent enclosures. Openings for manual feeding shall be sufficient only for entry of stock, and shall be provided with at least two permanently secured crossrails or other fall protection systems that meet the requirements of subpart D of this part.

* * * * *

(5) * * *

(i) All pulpers having the top or any other opening of a vessel less than 42 inches (1.06 m) from the floor or work platform shall have such openings guarded by guardrail systems meeting the requirements of subpart D of this part or other equivalent enclosures. For manual changing, openings shall be sufficient only to permit the entry of stock, and shall be provided with at least two permanently secured crossrails, or other fall protection systems meeting the requirements of subpart D of this part.

* * * * *

(k) * * *

(6) Steps. Steps of uniform rise and tread with nonslip surfaces shall be provided at each press, conforming to subpart D of this part.

* * * * *

(13) * * *

(i) A guardrail complying with subpart D of this part shall be provided at broke holes.

* * * * *

(15) *Steps.* Steps or ladders complying with subpart D of this part and tread with nonslip surfaces shall be provided at each calender stack. Handrails and hand grips complying with subpart D of this part shall be provided at each calendar stack.

* * * * *

8. In § 1910.265, paragraphs (c)(3)(i), (c)(4)(v), (c)(5)(i), (c)(10), (d)(2)(ii)(g) and (f)(6) would be revised to read as follows:

§ 1910.265 Sawmills.

* * * * *

(c) * * *

(3) * * *

(i) Floor and wall openings. All floor and wall openings shall be protected as prescribed in subpart D of this part.

* * * * *

(4) * * *

(v) Elevated platforms. Where elevated platforms are used routinely on a daily basis, they shall be equipped with stairways or fixed ladders, conforming to subpart D of this part.

* * * * *

(5) * * *

(i) Construction. Stairways shall be constructed in accordance with subpart D of this part.

* * * * *

(10) Ladders. Ladders shall be installed and maintained as specified in subpart D of this part.

* * * * *

(d) * * *

(2) * * *

(ii) * * *

(g) Guardrails, walkways, and standard handrails shall be installed in accordance with subpart D of this part.

* * * * *

(f) * * *

(6) Ladders. A fixed ladder complying with the requirements of subpart D of this part or other adequate means shall be provided to permit access to the roof. Where controls and machinery are mounted on the roof, a permanent stairway with standard handrail shall be installed in accordance with the requirements of subpart D of this part.

* * * * *

9. In § 1910.268, paragraph (g)(1) would be revised, paragraph (g)(2) would be removed, and paragraph (h) would be revised to read as follows:

§ 1910.268 Telecommunications.

* * * * *

(g) Personal climbing equipment. (1) General. Body belts and pole straps shall be provided and the employer shall ensure their use when work is performed at positions more than four feet (1.2 m) above the ground, on poles, and on towers, except as provided in paragraph (n)(7) and (n)(8) of this section. Personal fall protection systems shall meet the applicable requirements set forth in subpart I of this part. The employer shall ensure that all climbing equipment is inspected prior to each day's use to determine that it is in safe working condition. Production samples of personal fall protection systems shall be certified by the manufacturer or a qualified person as having been tested in accordance with and as meeting the requirements of subpart I of this part as applicable.

* * * * *

(h) Ladders. Ladders, step bolts, and manhole steps shall meet the applicable requirements of subpart D of this part with the following exceptions:

(1) Portable wood ladders shall not be painted, but may be coated with a translucent non-conductive coating.

(2) Rolling ladders used in telecommunication centers shall have a minimum inside width between siderails of at least eight inches (20.3 cm).

[FR Doc. 90–7800 Filed 4–9–90; 8:45 am]

PART 1910—OCCUPATIONAL SAFETY AND HEALTH STANDARDS

1. The authority citation for subpart I of part 1910 is proposed to be amended as follows:

Authority: Sec. 6 and 8 of the Occupational Safety and Health Act of 1970 (29 U.S.C. 653, 655, 657), Secretary of Labor's Order No. 12–71 (36 FR 8754), 8–76 (41 FR 25059), and 9–83 (48 FR 35736), or 1–90 (55 FR 9033), as applicable. Subpart I is also issued under 29 CFR part 1911.

2. Sections 1910.128, 1910.129, 1910.130 and 1910.131, and Appendices A, B, and C are proposed to be added to subpart I to read as follows:

* * * * *

Subpart I—Personal Protective Equipment

Sec.

1910.128 Definitions and general requirements for personal fall protection systems.
1910.129 Personal fall arrest systems.
1910.130 Positioning device systems.
1910.131 Personal fall protection systems for climbing activities.
* * * * *
Appendix A to Subpart I—Personal Fall Protection Systems
Appendix B to Subpart I—References for Further Information
Appendix C to Subpart I—Test Methods and Procedures for Personal Protective Systems

§ 1910.128 Definitions and general requirements for personal fall protection systems.

(a) Scope and application. (1) This section establishes definitions and general performance criteria for all personal fall protection systems. Additional requirements for the different types of personal fall protection systems are contained in §§ 1910.129, 1910.130, and 1910.131 of this subpart.

(2) This section applies only where referenced by a specific OSHA standard.

(b) Definitions

Anchorage means a secure point of attachment for lifelines, lanyards, or deceleration devices, and which is independent of the means of supporting or suspending the employee.

Belt terminal means an end attachment of a window cleaner's positioning system used for securing the belt or harness to single or double-headed anchors.

Body belt means a strap with means both for securing about the waist and for attaching to a lanyard, lifeline, or deceleration device.

Body harness means a design of straps which may be secured about the employee in a manner to distribute the fall arrest forces over at least the thighs, pelvis, waist, chest, and shoulders with means for attaching it to other components of a personal fall arrest system.

Buckle means any device for holding the body belt or body harness closed around the employee's body.

Carrier means the track of a ladder safety device consisting of a flexible cable or rigid rail which is secured to the ladder or structure by mountings.

Competent person means a person who is capable of identifying hazardous or dangerous conditions in any personal fall arrest system or any component thereof, as well as in their application and use with related equipment.

Connector means a device which is used to couple (connect) parts of the system together. It may be an independent component of the system, such as a carabiner, or it may be an integral component of part of the system (such as a buckle or dee-ring sewn into a body belt or body harness, or a snaphook spliced or sewn to a lanyard or self retracting lanyard.).

Deceleration device means any mechanism, such as rope grabs, ripstitch lanyards, specially-woven lanyards, tearing or deforming lanyards, automatic self retracting lifelines/lanyards, *etc.,* which serve to dissipate a substantial amount of energy during a fall arrest, or otherwise limit the energy imposed on an employee during fall arrest.

Deceleration distance means the additional vertical distance a falling employee travels, excluding lifeline elongation and free fall distance, before stopping, from the point at

which the deceleration device begins to operate. It is measured as the distance between the location of an employee's body belt or body harness attachment point at the moment of activation (at the onset of fall arrest forces) of the deceleration device during a fall, and the location of that attachment point after the employee comes to a full stop.

Double-head anchor means two anchor heads in the window frame on each side of a window, being used simultaneously and not singly, as part of a window cleaner's positioning system.

Equivalent means alternative designs, materials or methods to protect against a hazard which the employer can demonstrate will provide an equal or greater degree of safety for employees than the methods, materials or designs specified in the standard.

Free fall means the act of falling before the personal fall arrest system begins to apply force to arrest the fall.

Free fall distance means the vertical displacement of the fall arrest attachment point on the employee's body belt or body harness between onset of the fall and just before the system begins to apply force to arrest the fall. This distance excludes deceleration distance, lifeline and lanyard elongation, but includes any deceleration device slide distance or self-retracting lifeline\lanyard extension before they operate and fall arrest forces occur.

Ladder belt means a belt which may be attached to a fixed ladder or a secured portable ladder while the employee is performing work from the ladder.

Ladder safety device means a device other than a cage or well, designed to help prevent accidental falls from ladders, or to limit the length of such falls. A ladder safety device usually consists of a carrier, safety sleeve, and body belt or harness.

Lanyard means a flexible line of rope, wire rope, or strap which generally has a connector at each end for connecting the body belt or body harness to a deceleration device, lifeline, or anchorage.

Lifeline means a component consisting of a flexible line for connection to an anchorage at one end to hang vertically (vertical lifeline), or for connection to anchorages at both ends to stretch horizontally (horizontal lifeline), and which serves as a means for connecting other components of a personal fall arrest system to the anchorage.

Lineman's body belt means a belt which consists of a belt strap and dee-rings, and may include a cushion section or a tool saddle.

Personal fall arrest system means a system used to arrest an employee in a fall from a working level. It consists of an anchorage, connectors, a body belt or body harness and may include a lanyard, deceleration device, lifeline, or suitable combinations of these.

Personal fall protection system means a personal fall arrest system, a positioning device system, or a personal fall protection system for climbing activities which protects a worker from falling, or safely arrests a worker's fall, should a fall occur.

Personal fall protection system for climbing activities means a system worn or attached to an employee designed to prevent an employee from being injured should the employee fall while ascending or descending.

Pole strap means a strap used for supporting the employee while working on poles, towers, or platforms. Snap-hooks on each end are provided for attachment to dee-rings on the lineman's body belt.

Positioning device system means a system of equipment or hardware which, when used with its body belt or body harness, allows an employee to be supported on an elevated vertical surface, such as a wall or windowsill, and work with both hands free.

Qualified person means one with a recognized degree or professional certificate and extensive knowledge and experience in the subject field who is capable of design, analysis, evaluation and specifications in the subject work, project, or product.

Restraint (tether) line means a line from an anchorage or between anchorages, to which the employee is secured in such a way as to prevent the employee from walking or falling off an elevated work surface.

Rope grab means a deceleration device which travels on a lifeline and automatically frictionally engages the lifeline and locks so as to arrest the fall of an employee. A rope grab usually employs the principle of inertial locking, cam/lever locking, or both.

Saddle belt means a belt which has additional straps for supporting an employee in a sitting position at a work station.

Safety sleeve means the moving component with locking mechanism of a ladder safety device which travels on the carrier and connects the carrier to the body belt or harness.

Self-retracting lifeline/lanyard means a deceleration device which contains a drum-wound line which may be slowly extracted from, or retracted onto, the drum under slight tension during normal employee movement, and which, after onset of a fall, automatically locks the drum and arrests the fall.

Single-head anchor means one anchor head in the window frame on each side of the window used for attaching each end (belt terminal) of a window cleaner's strap.

Snap-hook means a connector comprised of a hook-shaped member with a normally closed keeper, or similar arrangement, which may be opened to permit the hook to receive an object and, when released, automatically closes to retain the object. Snap-hooks may generally be one of two types:

(1) The locking type with a self-closing, self-locking keeper which remains closed and locked until unlocked and pressed open for connection or disconnection, or

(2) The non-locking type with a self closing keeper which remains closed until pressed open for connection or disconnection.

Tie-off means the act of an employee, wearing personal fall protection equipment, to connect directly or indirectly to an anchorage. It also means the condition of an employee being connected to an anchorage.

Window cleaner's belt means a belt which consists of a waist-belt, an integral terminal runner or strap, and belt terminals.

Window cleaner's positioning system means a system which consists of a window cleaner's belt secured to window anchors.

(c) General requirements. (1) Connectors shall be drop forged, pressed or formed steel, or made of equivalent materials.

(2) Connectors shall have a corrosion-resistant finish, and all surfaces and edges shall be smooth to prevent damage to interfacing parts of the system.

(3) Lanyards and vertical lifelines which tie-off one employee shall have a minimum breaking strength of 5,000 pounds (22.2 kN).

(4) Self-retracting lifelines and lanyards which automatically limit free fall distance to two feet (0.61 m) or less shall have components capable of sustaining a minimum static tensile load of 3,000 pounds (13.3 kN) applied to the device with the lifeline or lanyard in the fully extended position.

(5) Self-retracting lifelines and lanyards which do not limit free fall distance to two feet (0.61 m) or less, ripstitch lanyards, and tearing and deforming lanyards shall be capable of sustaining a minimum tensile load of 5,000 pounds (22.2 kN) applied to the device with the lifeline or lanyard in the fully extended position.

(6) Dee-rings and snap-hooks shall be capable of sustaining a minimum tensile load of 5,000 pounds (22.2 kN).

(7) Dee-rings and snap-hooks shall be proof-tested to minimum tensile load of 3,600 pounds (16 kN) without cracking, breaking, or taking permanent deformation.

(8) Snap-hooks shall be dimensionally compatible with the member to which they are connected so as to prevent unintentional disengagement of the snap-hook by depression of the snap-hook keeper by the connected member, or shall be a locking type snap-hook designed to prevent disengagement of the snap-hook by the contact of the snap-hook keeper by the connected member.

(9) Horizontal lifelines shall be designed, installed, and used under the supervision of a qualified person, as part of a complete personal fall arrest system, which maintains a safety factor of at least two.

(10) Anchorages, including single- and double-head anchors, shall be capable of supporting at least 5,000 pounds (22.2 kN) per employee attached, or shall be designed, installed, and used under the supervision of qualified person as part of a complete personal fall protection system which maintains a safety factor of at least two.

(11) Restraint lines shall be capable of sustaining a tensile load of at least 3,000 pounds (13.3 kN).

(12) Lifelines and carriers shall not be made of natural fiber rope.

(13) Snap-hooks shall not be connected to each other.

(14) Personal fall protection systems and their components shall be used only for employee fall protection.

(15) Personal fall protection systems or their components subjected to impact loading shall be immediately removed from service and shall not be used again for employee protection unless inspected and determined by a competent person to be undamaged and suitable for reuse.

(16) Before using personal fall protection systems, and after any component or system is changed, employees shall be trained in the

application limits of the equipment, proper hook-up, anchoring and tie-off techniques, methods of use, and proper methods of equipment inspection and storage.

(17) Personal fall protection systems shall be inspected prior to each use for mildew, wear, damage, and other deterioration. Defective components shall be removed from service if their function or strength has been adversely affected.

§ 1910.129 Personal Fall Arrest Systems

(a) Scope and application. (1) This section establishes performance criteria and care and use requirements for personal fall arrest systems. It applies only where referenced by a specific OSHA standard.

(b) System performance criteria. (1) Personal fall arrest systems shall, when stopping a fall:

(i) Limit maximum arresting force on an employee to 900 pounds (4 kN) when used with a body belt.

(ii) Limit maximum arresting force on an employee to 1,800 pounds (8 kN) when used with a body harness;

(iii) Bring an employee to a complete stop and limit maximum deceleration distance an employee travels to 3.5 feet (1.07 m); and

(iv) Have sufficient strength to withstand twice the potential impact energy of an employee free falling a distance of six feet (1.8 m), or the free fall distance permitted by the system, whichever is less.

(2)(i) When used by employees having a combined person and tool weight of less than 310 pounds (140 kg), personal fall arrest systems which meet the criteria and protocol contained in 1910.129 of Appendix C shall be considered as complying with the provisions of paragraphs (b)(1)(i) through (b)(1)(iv) of this section.

(ii) When used by employees having a combined tool and body weight of 310 pounds (140 kg) or more, personal fall arrest systems which meet the criteria and protocols contained in 1910.129 of Appendix C may be considered as complying with the provisions paragraphs (b)(1)(i) through (b)(1)(iv) of this section, provided that the criteria and protocols are modified appropriately to provide proper protection for such heavier weights.

(c) Care and use.

(1) Unless the snap-hook is designed for the following connections, snap-hooks shall not be engaged:

(i) Directly to webbing, rope or wire rope;

(ii) To each other;

(iii) To a dee-ring to which another snap-hook or connector is attached;

(iv) To a horizontal lifeline; or

(v) To any object which is incompatibly shaped or dimensioned in relation to the snap-hook such that unintentional disengagement could occur by the connected object being able to depress the snaphook keeper and release itself.

(2) Devices used to connect to a horizontal lifelines which may become a vertical lifeline shall be capable of locking in either direction on the lifeline.

(3) Personal fall arrest systems shall be rigged such that an employee can neither free fall more than six feet (1.8 m), nor contact any lower level.

(3) Personal fall arrest systems shall be worn with the attachment point of the body belt located in the center of the wearer's back, and the attachment point of the body harness located in the center of the wearer's back near shoulder level, or above the wearer's head.

(5) When vertical lifelines are used, each employee shall be provided with a separate lifeline.

(6) The employer shall provide for prompt rescue of employees in the event of a fall or shall assure that employees are able to rescue themselves.

(7) Lifelines shall be protected against being cut or abraded.

§ 1910.130 Positioning device systems.

(a) Scope and application. This section establishes additional application and performance criteria for positioning device systems. It applies only where referenced by a specific OSHA standard.

(b) System performance criteria. (1) A window cleaner's positioning system shall be capable of withstanding without failure a drop test consisting of a six (1.83 m) drop of a 250 pound (113 kg) weight. The system shall limit the initial arresting force to not more than 2,000 pounds (8.89 kN), with a duration not to exceed two milliseconds, and shall limit any subsequent arresting forces imposed on the falling employee to not more than 1,000 pounds (4.45 kN).

(2) All other positioning device systems shall be capable of withstanding without failure a drop test consisting of four foot (1.2 m) drop of a 250 pound (113 kg) weight.

(3) Positioning device systems which meet the tests contained in 1910.130 of Appendix C, shall be deemed in compliance with the provisions of paragraphs (b)(1) and (2) of this section.

(c) Lineman's body belt and pole strap systems. The following additional provisions shall apply to lineman's body belt and pole strap systems:

(1) All materials used for pole straps shall be capable of withstanding an alternating current (A.C.) dielectric test of not less 25,000 volts per foot (82,020 volts per meter) ''dry'' for three minutes, without visible deterioration.

(2) Materials shall not be used if leakage current exceeds one milliampere when a potential of 3,000 volts is applied to electrodes positioned 12 inches (30.5 cm) apart.

(3) In lieu of alternating current (A.C.), direct current (D.C.) may be used to evaluate the requirements 1910.130(c)(1) and (2). The D.C. voltage used shall be two times the A.C. voltage used for these tests.

(4) The cushion part of the lineman's body belt shall be at least three inches (7.6 cm) in width.

(5) Suitable copper, steel, or other liners shall be used around the bars of dee-rings where they are attached to body belts to prevent weakening of the body belt due to wear and tear.

(d) Window cleaner's belts, anchorages and systems. The following additional provisions shall apply to window cleaner's belts, anchorages and systems.

(1) The belt shall be designed and constructed so that belt terminals will not pass through their fastenings on the belt or harness should one terminal become loosened from its window anchor. The length of the runner from terminal tip to terminal tip shall be eight feet (2.44 m) or less.

(2) The anchors on a building to which the belt is to be fastened shall be installed in the side frames of the window or in the mullions at a point not less than 42 inches (106.7 cm) nor more than 51 inches (129.5 cm) above the window sill. Each anchor, and the structure to which it is attached, shall be capable of supporting a minimum load of 6,000 pounds (26.5 kN).

(3) Rope which has sustained wear or deterioration materially affecting its strength may not be used.

(4) Anchors whose fastenings or supports are damaged or deteriorated shall be removed or rendered unusable by detachment of the anchor head(s).

(5) An installed single or double-head anchor may not be used for any purpose other than attachment of a window cleaner's belt.

(6) Both belt terminals shall be attached to separate single or double-head anchors during the cleaning operation.

(7) Cleaning work is not permitted on a sill or ledge on which there is snow, ice, or any other slippery condition, nor on a weakened or rotted sill or ledge.

(8) A window cleaner may work from a windowsill only if a minimum standing room in relation to slope is provided as follows:

(i) When the sill width is at least four inches (10.1 cm), work is permitted with a slope of the sill from horizontal up to 15 degrees;

(ii) For slopes between 15 and 30 degrees from horizontal, but in no case greater than 30, the minimum acceptable sill width is four inches (10.1 cm), plus 0.4 inches (1.0 cm) for every degree of slope greater than 15 degrees.

(9) The window cleaner shall attach at least one belt terminal to a window anchor before climbing through the window opening. The belt shall not be completely disconnected from both anchors until the employee is back inside the window opening.

(10) The window cleaner shall not pass from one window to another while outside the building, but shall return inside and repeat the belt terminal attachment procedure for each window as described in paragraph (d)(9) of this section.

§ 1910.131 Personal fall protection systems for climbing activities.

(a) Scope and application. This section establishes additional application and performance criteria for personal fall protection systems for climbing activities. It applies only where referenced by a specific OSHA standard.

(b) Design criteria for systems components. (1) Personal fall protection systems for climbing activities shall permit the employee using the system to ascend or descend without continually having to hold, push or pull any part of the system, leaving both hands free for climbing.

(2) The connection between the carrier or lifeline and the point of attachment to the body belt or harness shall not exceed nine inches (23 cm) in length.

(3) Personal fall protection systems for climbing activities shall be activated within two feet (.61 m) after a fall occurs, in order to limit the descending velocity of an employee to seven feet/sec (2.1 m/sec) or less.

(4) Mountings for rigid carriers shall be attached at each end of the carrier, with intermediate mountings, as necessary, spaced along the entire length of the carrier, to provide strength necessary to stop employee falls.

(6) Mountings for flexible carriers shall be attached at each end of the carrier. When the system is exposed to wind, cable guides utilized with a flexible carrier shall be installed at a minimum spacing of 25 feet (7.6 m) and a maximum spacing of 40 feet (12.2 m) along the entire length of the carrier, to prevent wind damage to the system.

(7) The design and installation of mountings and cable guides shall not reduce the design strength of the ladder.

(c) System performance criteria. (1) Ladder safety devices and their support systems shall be capable of withstanding without failure a drop test consisting of an 18 inch (.41 m) drop of a 500 pound (226 kg) weight.

(2)All other personal fall protection systems for climbing activities shall be capable of withstanding without failure a drop test consisting of a four foot (1.2 m) drop of a 250 pound (113 kg) weight.

Appendix A to Subpart I—Personal Fall Protection Systems

§ 1910.128 Personal fall protection systems.

The following information generally applies to all personal fall protection systems.

1. *Selection and use considerations.* The kind of personal fall protection system selected should match the particular work situation, and any possible free fall distance should be kept to a minimum. Many systems are generally designed for a particular work application, such as a lineman's body belt and pole strap, a rebar belt and chain assembly, or a window cleaner's belt. Consideration should be given to the particular work environment. For example, the presence of acids, dirt, moisture, oil, grease, etc., and their effect on the system, should be evaluated. Hot or cold environments may also have an adverse affect on the system. Wire rope should not be used where an electrical hazard is anticipated. As required by the standard, consideration must also be given to having means available to rescue an employee should a fall occur, since the suspended employee may not be able to reach a work level independently.

Where lanyards, connectors, and lifelines are subject to damage by work operations, such as welding, chemical cleaning, and sandblasting, protection of the component, or other securing systems should be used. Unless designed for use in a personal fall arrest system, linemen's pole straps should not be used as lanyards. Chest harnesses should not be used where there is a possibility of any free fall. The employer should fully evaluate the work conditions and environment (including seasonal weather changes) before selecting the appropriate personal fall protection system. Once in use, the system's effectiveness should be monitored. In some cases, a program for cleaning and maintenance of the system may be necessary.

2. *Testing Considerations.* Before purchasing a personal fall protection system, an employer should insist that the supplier provide information about the system based on its performance during testing of the system using recognized test methods so that the employer will know that the system meets the criteria in this standard. Otherwise, the employer will not know if the equipment is in compliance unless samples he has purchased are tested. Appendix C contains test methods which are recommended for evaluating the performance of any system. Not all systems need to be tested; the performance of a system can often be based on data and calculations derived from testing of similar systems, provided that enough information is available to demonstrate similarity of function and design.

3. *Component compatibility considerations.* Ideally, a personal fall protection system is designed, tested, and supplied as a complete system. However, it is common practice for lanyards, connectors, lifelines, deceleration devices, body belts and body harnesses to be interchanged since some components wear out before others. The employer and employee should realize that not all components are interchangeable. For instance, a lanyard should not be connected between a body belt (or harness) and a deceleration device of the self-retracting type since this can result in additional free fall for which the system was not designed. In addition, positioning device components, such as pole straps, ladder hooks and rebar hooks, should not be used in a fall arrest system unless they meet the requirements of § 1910.129. Also, a ladder hook may not be used with a dee-ring, nor in a system which would permit any significant free fall distance (more than two feet (0.61 m)). Rebar hooks should be sized and used to be compatible with the size of rebar to which they will be attached. Any substitution or change to a personal fall protection system should be fully evaluated or tested by a competent person to determine that it meets the standard, before the modified system is put in use.

4. *Employee training considerations.* OSHA recommends that before the equipment is used, employees should be trained in the application limits; proper anchoring and tie-off techniques, including determination of elongation and deceleration distance; methods of use; and inspection and storage of the system. Careless or improper use of the equipment can result in serious injury or death. Employers and employees should become familiar with the material in this standard and appendix, as well as manufacturers' recommendations, before a system is used. Of uppermost importance is the reduction in strength caused by certain tie-offs (such as using knots, tying around sharp edges, etc.) and maximum permitted free fall distance. Also to be stressed are the importance of inspections prior to use, the limitations of the equipment, and unique conditions at the worksite which may be important in determining the type of system to use.

5. *Instruction considerations.* Employers should obtain comprehensive instructions from the supplier as to the system's proper use and application, including, where applicable:

a. The force measured during the sample force test;

b. The maximum elongation measured for lanyards during the strength test;

c. The deceleration distance measured for deceleration devices during the force test;

d. Caution statements on critical use limitations;

e. Application limits;

f. Proper hook-up, anchoring and tie-off techniques, including the proper dee-ring or other attachment point to use on the body belt and harness for fall arrest;

g. Proper climbing techniques;

h. Methods of inspection, use, cleaning, and storage; and

i. Specific lifelines which may be used.

This information should be provided to employees during training.

6. *Inspection considerations.* OSHA recommends that personal fall protection systems must be regularly inspected. Any component with any significant defect, such as cuts, tears, abrasions, mold, or undue stretching; alterations or additions which might affect its efficiency; damage due to deterioration; contact with fire, acids, or other corrosives; distorted hooks or faulty hook springs; tongues unfitted to the shoulder of buckles; loose or damaged mountings; non-functioning parts; or wearing or internal deterioration in the ropes must be withdrawn from service immediately, and should be tagged or marked as unusable, or destroyed.

§ 1910.129 Personal fall arrest systems.

1. *Special considerations.* As required by the standard, when personal fall arrest systems are used, special consideration must be given to rescuing an employee should a fall occur. The availability of rescue personnel, ladders or other rescue equipment should be evaluated. In some situations, equipment which allows employees to rescue themselves after the fall has been arrested may be desirable.

2. *Tie-off considerations.* Employers and employees should at all times be aware that the strength of a personal fall arrest system is based on its being attached to an anchoring system which does not significantly reduce the strength of the system (such as an eye-bolt/snap-hook anchorage). Therefore, if a means of attachment is used that will reduce the strength of the system, that component should be replaced by a stronger one, but one that will also maintain the appropriate maximum deceleration characteristics. The following is a listing of some known strength reduction situations.

a. *Tie-off using a knot in the lanyard or lifeline (at any location).* The strength of the line can be reduced by 50 percent, or more, if a knot is used. Therefore, a stronger lanyard or lifeline should be used to compensate for the knot, or the lanyard length should be reduced (or the tie-off

location raised) to minimize free fall distance, or the lanyard or lifeline should be replaced by one which has an appropriately incorporated connector to eliminate the need for a knot.

b. *Tie-off around a ''H'' or ''I'' beam or similar support.* Strength can be reduced as much as 70 percent by the cutting action of the beam edges. Therefore, the employer should either provide a webbing lanyard or a wire core lifeline around the beam to protect the lanyard or lifeline from the beam edges, or greatly minimize the potential free fall distance.

c. *Tie-off around rough or sharp surfaces.* This practice reduces strength drastically. Such a tie-off is to be avoided; an alternate means should be used such as a snap-hook/dee-ring connection, a tie-off apparatus (steel cable tie-off), an effective padding of the surfaces, or an abrasion-resistant strap around the supporting member.

d. *Horizontal lifelines.* Horizontal lifelines, depending on their geometry and angle of sag, may be subjected to greater loads than the impact load imposed by an attached component. When the angle of horizontal lifeline sag is less than 30 degrees, the impact force imparted to the lifeline by an attached lanyard is greatly amplified. For example, with a sag angle of 15 degrees the force amplification is about 2:1, and at five degrees sag it is about 6:1. Depending on the angle of sag, and the line's elasticity, the strength of the horizontal lifeline and the anchorages to which it is attached should be increased a number of times over that of the lanyard. Extreme care should be taken in considering a horizontal lifeline for multiple tie-offs. The reason for this is that in multiple tie-offs to a horizontal lifeline, if one employee falls, the movement of the falling employee and the horizontal lifeline during arrest of the fall may cause other employees to also fall. Horizontal lifeline and anchorage strength should be increased for each additional employee to be tied-off. For these and other reasons, the design of systems using horizontal lifelines must only be done by qualified persons. Testing of installed lifelines and anchors prior to use is recommended.

e. *Eye-bolts.* It must be recognized that the strength of an eye-bolt is rated along the axis of the bolt, and that its strength is greatly reduced if the force is applied at right angles to this axis (in the direction of its shear strength). Care must also be exercised in selecting the proper diameter of the eye to avoid creating a roll-out hazard (accidental disengagement of the snap-hook from the eye-bolt).

f. *Knots.* Due to the significant reduction in the strength of the lifeline (in some cases, as much as a 70 percent reduction), the sliding hitch knot should not be used except in situations where no other available system is practical. The one and one sliding hitch knot should never be used because it is unreliable in stopping a fall. The two and two, or three and three knot (preferable) may be used in special situations; however, care should be taken to limit free fall distance to a minimum because of reduced lifeline strength.

g. *Vertical lifeline considerations.* As required by the standard, each employee must have a separate lifeline when the lifeline is vertical. The reason for this is that in multiple tie-offs to a single lifeline, if one employee falls, the movement of the lifeline during the arrest of the fall may pull other employees' lanyards, causing them to fall as well.

h. *Planning considerations.* One of the most important aspects of personal fall protection systems is fully planning the system before it is put into use. Probably the most overlooked component is planning for suitable anchorage points. Such planning should ideally be done before the structure or building is constructed so that anchorage points can be incorporated during construction for use later for window cleaning or other building maintenance. If properly planned, these anchorage points may be used during construction, as well as afterwards.

i. *Snap-hook considerations.* Although not required by this standard for all connections, locking snap-hooks designed for connection to any object (of sufficient strength) are highly recommended in lieu of the non-locking type. Locking snap-hooks incorporate a positive locking mechanism in addition to the spring loaded keeper, which will not allow the keeper to open under moderate pressure without someone first releasing the mechanism. Such a feature, properly designed, effectively prevents roll-out from occurring.

As required by the standard, the following connections must be avoided (unless properly designed locking snap-hooks are used) because they are conditions which can result in roll-out when a non-locking snap-hook is used:

- Direct connection of a snap-hook to a horizontal lifeline.
- Two (or more) snap-hooks connected to one dee-ring.
- Two snap-hooks connected to each other.
- A snap-hook connected back on its integral lanyard.
- A snap-hook connected to a webbing loop or webbing lanyard.
- Improper dimensions of the dee-ring, rebar, or other connection point in relation to the snap-hook dimensions which would allow the snap-hook keeper to be depressed by a turning motion of the snap-hook.

j. *Free fall considerations.* The employer and employee should at all times be aware that a system's maximum arresting force is evaluated under normal use conditions established by the manufacturer, and in no case using free fall distance in excess of six feet (1.8 m). A few extra feet of free fall can significantly increase the arresting force on the employee, possibly to the point of causing injury. Because of this, the free fall distance should be kept at a minimum, and, as required by the standard, in no case greater than six feet (1.8 m). To assure this, the tie-off attachment point to the lifeline or anchor should be located at or above the connection point of the fall arrest equipment to the belt or harness. (Since otherwise additional free fall distance is added to the length of the connecting means (*i.e.* lanyard)). Attaching to the working surface will often result in a free fall greater than six feet (1.8 m). For instance, if a six foot (1.8 m) lanyard is used, the total free fall distance will be the distance from the working level to the body belt (or harness) plus the six feet (1.8 m) of lanyard length. Another important consideration is that the arresting force which the fall system must withstand also goes up with greater distances of free fall, possibly exceeding the strength of the system.

k. *Elongation and deceleration distance considerations.* Other factors involved in a proper tie-off are elongation and deceleration distance. During the arresting of a fall, a lanyard will experience a length of stretching or elongation, whereas activation of a deceleration device will result in a certain stopping distance. These distances should be available with the lanyard or device's instructions and must be added to the free fall distance to arrive at the total fall distance before an employee is fully stopped. The additional stopping distance may be very significant if the lanyard or deceleration device is attached near or at the end of a long lifeline, which may itself add considerable distance due to its own elongation. As required by the standard, sufficient distance to allow for all of these factors must also be maintained between the employee and obstructions below, to prevent an injury due to impact before the system fully arrests the fall. In addition, a minimum of 12 feet (3.7 m) of lifeline should be allowed below the securing point of a rope grab type deceleration device, and the end terminated to prevent the device from sliding off the lifeline. Alternatively, the lifeline should extend to the ground or the next working level below. These measures are suggested to prevent the worker from inadvertently moving past the end of the lifeline and having the rope grab become disengaged from the lifeline.

l. *Obstruction considerations.* The location of the tie-off should also consider the hazard of obstructions in the potential fall path of the employee. Tie-offs which minimize the possibilities of exaggerated swinging should be considered. In addition, when a body belt is used, the employee's body will go through a horizontal position to a jack-knifed position during the arrest of a fall. Thus, obstructions which might interfere with this motion should be avoided or a severe injury could occur.

m. *Other considerations.* Because of the design of some personal fall arrest systems, additional considerations may be required for proper tie-off. For example, heavy deceleration devices of the self-retracting type should be secured overhead in order to avoid the weight of the device having to be supported by the employee. Also, if self-retracting equipment is connected to a horizontal lifeline, the sag in the lifeline should be minimized to prevent the device from sliding down the lifeline to a position which creates a swing hazard during fall arrest. In all cases, manufacturers' instructions should be followed.

§ 1910.130 Positioning device systems.

1. *Other information.* The following American National Standard is a helpful guideline for window cleaner's positioning device systems:

a. ASME/ANSI A39.1—Safety Requirements for Window Cleaning. In addition to information on the design and use of window cleaner's belts and anchors, other window cleaning procedures are outlined.

2. *Marking.* It is recommended that body belts and pole straps, not designed for use with personal fall arrest systems (not meeting the requirements of § 1910.129) and all chest harnesses, be marked to indicate that they are for use only in positioning device systems.

Appendix B to Subpart I—References for Further Information

Note: The following appendix to §§ 1910.128–1910.131 of subpart I serves as a non-mandatory guideline to assist employers and employees in complying with these sections and to provide other helpful information. This appendix neither adds to nor detracts from the obligations contained in the OSHA standards.

The following references provide information which may be helpful in understanding and implementing subpart I.

1. ''American National Standard Safety Requirements for Fixed Ladders,'' ANSI A14.3–1982. American National Standards Institute, 1430 Broadway, New York, New York 10018.

2. ''American National Standard Safety Requirements for Window Cleaning,'' ASME/ANSI A39.1a–1988. American National Standards Institute, 1430 Broadway, New York, New York 10018.

3. Chaffin, Don B. and Terrence J. Stobbe. ''Ergonomic Considerations Related to Selected Fall Prevention Aspects of Scaffolds and Ladders as Presented in OSHA Standard 29 CFR Part 1910 Subpart D.'' The University of Michigan, Ann Arbor, Michigan 48104, September 1979. Available from: U.S. Department of Labor, OSHA, 200 Constitution Avenue, NW., Washington, DC 20210.

4. ''A Study of Personal Fall-Safety Equipment,'' NBSIR 76–1146. National Bureau of Standards (NBS), U.S. Department of Commerce, Washington, DC 20234. Available from: National Technical Information Service (NTIS), Springfield, Virginia 22151.

5. Sulowski, Andrew C. ''Selecting Fall Arresting Systems,'' Pp. 55–62. ''National Safety News,'' October 1979, National Safety Council, 425 N. Michigan Avenue, Chicago, Illinois 60611.

6. Sulowski, Andrew C. ''Assessment of Maximum Arrest Force,'' Pp. 55–58. ''National Safety News,'' March 1981, National Safety Council, 425 N. Michigan Avenue, Chicago, Illinois 60611.

Appendix C to Subpart I—Test Methods and Procedures for Personal Protective Systems

Note: The following appendix to §§ 1910.128–1910.131 of subpart I serves as a non-mandatory guideline to assist employers and employees in complying with these sections and to provide other helpful information. This appendix neither adds to nor detracts from the obligations contained in the OSHA standards.

This appendix contains test methods for personal fall protection systems which may be used to determine if they meet the system performance criteria specified in §§ 1910.129 and 1910.130.

§ 1910.129 Test methods for personal fall arrest systems.

1. *General.* The following sets forth test procedures for personal fall arrest systems as defined in § 1910.129.

2. *General test conditions.*

a. Lifelines, lanyards and deceleration devices should be attached to an anchorage and connected to the body-belt or body harness in the same manner as they would be when used to protect employees.

b. The anchorage should be rigid, and should not have a deflection greater than .04 inches (1 mm) when a force of 2,250 pounds (10 kN) is applied.

c. The frequency response of the load measuring instrumentation should be 120 HZ.

d. The test weight used in the strength and force tests should be a rigid, metal cylindrical or torso-shaped object with a girth of 38 inches plus or minus four inches (96 cm plus or minus 10 cm).

e. The lanyard or lifeline used to create the free fall distance should be supplied with the system, or in its absence, the least elastic lanyard or lifeline available to be used with the system.

f. The test weight for each test should be hoisted to the required level and should be quickly released without having any appreciable motion imparted to it.

g. The system's performance should be evaluated, taking into account the range of environmental conditions for which it is designed to be used.

h. Following the test, the system need not be capable of further operation.

3. *Strength test.*

a. During the testing of all systems, a test weight of 300 pounds plus or minus five pounds (135 kg plus or minus 2.5 kg) should be used. (See paragraph 2.d. above.)

b. The test consists of dropping the test weight once. A new unused system should be used for each test.

c. For lanyard systems, the lanyard length should be six feet plus or minus two inches (1.83 plus or minus 5 cm) as measured from the fixed anchorage to the attachment on the body belt or body harness.

d. For rope-grab-type deceleration systems, the length of the lifeline above the centerline of the grabbing mechanism to the lifeline's anchorage point should not exceed two feet (0.61 m).

e. For lanyard systems, for systems with deceleration devices which do not automatically limit free fall distance to two feet (0.61 m) or less, and for systems with deceleration devices which have a connection distance in excess of one foot (0.3 m) (measured between the centerline of the lifeline and the attachment point to the body belt or harness), the test weight should be rigged to free fall a distance of 7.5 feet (2.3 m) from a point that is 1.5 feet (46 cm) above the anchorage point, to its hanging location (six feet below the anchorage). The test weight should fall without interference, obstruction, or hitting the floor or ground during the test. In some cases a non-elastic wire lanyard of sufficient length may need to be added to the system (for test purposes) to create the necessary free fall distance.

f. For deceleration device systems with integral lifelines or lanyards which automatically limit free fall distance to two feet (0.61 m) or less, the test weight should be rigged to free fall a distance of four feet (1.22 m).

g. Any weight which detaches from the belt or harness should constitute failure for the strength test.

4. *Force test.* a. *General.* The test consists of dropping the respective test weight specified in 4.b.(i) or 4.c.(i) once. A new, unused system should be used for each test.

b. *For lanyard systems.* (i) A test weight of 220 pounds plus or minus three pounds (100 kg plus or minus 1.6 kg) should be used. (See paragraph 2.d., above.)

(ii) Lanyard length should be six feet plus or minus two inches (1.83 m plus or minus 5 cm) as measured from the fixed anchorage to the attachment on the body belt or body harness.

(iii) The test weight should fall free from the anchorage level to its hanging location (a total of six feet (1.83 m) free fall distance) without interference, obstruction, or hitting the floor or ground during the test.

c. *For all other systems.* (i) A test weight of 220 pounds plus or minus three pounds (100 kg plus or minus 1.6 kg) should be used. (See paragraph 2.d., above.)

(ii) The free fall distance to be used in the test should be the maximum fall distance physically permitted by the system during normal use conditions, up to a maximum free fall distance for the test weight of six feet (1.83 m), except as follows:

(A) For deceleration systems which have a connection link or lanyard, the test weight should free fall a distance equal to the connection distance (measured between the centerline of the lifeline and the attachment point to the body belt or harness).

(B) For deceleration device systems with integral lifelines or lanyards which automatically limit free fall distance to two feet (0.61 m) or less, the test weight should free fall a distance equal to that permitted by the system in normal use. (For example, to test a system with a self-retracting lifeline or lanyard, the test weight should be supported and the system allowed to retract the lifeline or lanyard as it would in normal use. The test weight would then be released and the force and deceleration distance measured).

d. *Failure.* A system fails the force test if the recorded maximum arresting force exceeds 1,260 pounds (15.6 kN) when using a body belt, and/or exceeds 2,520 pounds (11.2 kN) when using a body harness.

e. *Distances.* The maximum elongation and deceleration distance should be recorded during the force test.

5. *Deceleration device tests.* a. *General.* The device should be evaluated or tested under the environmental conditions (such as rain, ice, grease, dirt, type of lifeline, etc.) for which the device is designed.

b. *Rope-grab-type deceleration devices.* (i) Devices should be moved on a lifeline 1,000 times over the same length of line a distance of not less than one foot (30.5 cm), and the mechanism should lock each time.

(ii) Unless the device is permanently marked to indicate the type of lifelines which must be used, several types (different diameters and different materials), of lifelines should be used to test the device.

c. *Other self-activating-type deceleration devices.* The locking mechanisms of other self-activating-type deceleration devices designed for more than one arrest should lock each of 1,000 times as they would in normal service.

§ 1910.130 Test methods for positioning device systems.

1. *General.* The following sets forth test procedures for positioning device systems as defined in § 1910.130.

2. *Test conditions.*

a. The fixed anchorage should be rigid and should not have a deflection greater than .04 inches (1 mm) when a force of 2,250 pounds (10 kN) is applied.

b. For lineman's body belts and pole straps, the body belt should be secured to a 250 pound (113 kg) bag of sand at a point which simulates the waist of an employee. One end of the pole strap should be attached to the rigid anchorage and the other end to the body belt. The sand bag should be allowed to free fall a distance of four feet (1.2 m). Failure of the pole strap and body belt should be indicated by any breakage or slippage sufficient to permit the bag to fall free to the ground.

c. For window cleaner's belts, the complete belt should withstand a drop test consisting of a 250 pound (113 kg) weight falling free for a distance of six feet (1.83 m). The weight should be a rigid object with a girth of 38 inches plus or minus four inches (96 cm plus or minus 10 cm). The weight should be placed in the waistband with the belt buckle drawn firmly against the weight, as when the belt is worn by a window cleaner. One belt terminal should be attached to a rigid anchor and the other terminal should hang free. The terminals should be adjusted to their maximum span. The weight fastened in the freely suspended belt should then be lifted exactly six feet (1.83 m) above its ''at rest'' position and released so as to permit a free fall of six feet (1.83 m) vertically below the point of attachment of the terminal anchor. The belt system should be equipped with devices and instrumentation capable of measuring the duration and magnitude of the arrest forces. Failure of the test should consist of any breakage or slippage sufficient to permit the weight to fall free of the system. In addition, the initial and subsequent arresting forces should be measured and should not exceed 2,000 pounds (8.5 kN) for more than two milliseconds for the initial impact, nor exceed 1,000 pounds (4.5 kN) for the remainder of the arrest time.

d. All other positioning device systems (except for restraint line systems) should withstand a drop test consisting of a 250 pound (113 kg) weight falling free for a distance of four feet (1.2 m). The weight should be the same as described in paragraph (b)(3), above. The body belt or harness should be affixed to the test weight as it would be to an employee. The system should be connected to the rigid anchor in the manner that the system would be connected in normal use. The weight should be lifted exactly four feet (1.2 m) above its ''at rest'' position and released so as to permit a vertical free fall of four feet (1.2 m). Failure of the system should be indicated by any breakage or slippage sufficient to permit the weight to fall free to the ground.

(Sections 6(b) and 8, 84 Stat. 1593, 1599, 1600, (29 U.S.C. 655, 657), Secretary of Labor's Order No. 9–83 (48 FR 35736); 29 CFR part 1911)

[FR Doc. 03–10617 Filed 5–1–03; 8:45 am]

BILLING CODE 4510–26–P

Reader Aids

Federal Register

Vol. 68, No. 85

Friday, May 2, 2003

CUSTOMER SERVICE AND INFORMATION

Federal Register/Code of Federal Regulations	
General Information, indexes and other finding aids	**202–741–6000**
Laws	**741–6000**
Presidential Documents	
Executive orders and proclamations	**741–6000**
The United States Government Manual	**741–6000**
Other Services	
Electronic and on-line services (voice)	**741–6020**
Privacy Act Compilation	**741–6064**
Public Laws Update Service (numbers, dates, etc.)	**741–6043**
TTY for the deaf-and-hard-of-hearing	**741–6086**

ELECTRONIC RESEARCH

World Wide Web

Full text of the daily Federal Register, CFR and other publications is located at: **http://www.access.gpo.gov/nara**

Federal Register information and research tools, including Public Inspection List, indexes, and links to GPO Access are located at: **http://www.archives.gov/federal__register/**

E-mail

FEDREGTOC-L (Federal Register Table of Contents LISTSERV) is an open e-mail service that provides subscribers with a digital form of the Federal Register Table of Contents. The digital form of the Federal Register Table of Contents includes HTML and PDF links to the full text of each document.

To join or leave, go to **http://listserv.access.gpo.gov** and select *Online mailing list archives, FEDREGTOC-L, Join or leave the list (or change settings);* then follow the instructions.

PENS (Public Law Electronic Notification Service) is an e-mail service that notifies subscribers of recently enacted laws.

To subscribe, go to **http://listserv.gsa.gov/archives/publaws-l.html** and select *Join or leave the list* (or change settings); then follow the instructions.

FEDREGTOC-L and **PENS** are mailing lists only. We cannot respond to specific inquiries.

Reference questions. Send questions and comments about the Federal Register system to: **info@fedreg.nara.gov**

The Federal Register staff cannot interpret specific documents or regulations.

FEDERAL REGISTER PAGES AND DATE, MAY

23183–23376 1
23377–23568 2

CFR PARTS AFFECTED DURING MAY

At the end of each month, the Office of the Federal Register publishes separately a List of CFR Sections Affected (LSA), which lists parts and sections affected by documents published since the revision date of each title.

7 CFR
46 23377
932 23378
Proposed Rules:
360 23425
1530 23230

10 CFR
72 23183

12 CFR
740 23381
Proposed Rules:
613 ..... 23425, 23426

14 CFR
39 ..... 23183, 23186, 23190, 23384, 23387
Proposed Rules:
39 ..... 23231, 23235, 23427

20 CFR
404 23192
416 23192

21 CFR
1300 23195
1310 23195

23 CFR
Proposed Rules:
630 23239

24 CFR
203 23370

29 CFR
Proposed Rules:
1910 23528

33 CFR
117 23390
165 ..... 23390, 23393, 23399

36 CFR
Proposed Rules:
1280 23430

37 CFR
Proposed Rules:
262 23241

38 CFR
Proposed Rules:
39 23249

40 CFR
52 ..... 23206, 23207, 23404
62 23209
271 23407
300 23211
Proposed Rules:
52 ..... 23270, 23430
62 23272

44 CFR
64 23408

45 CFR
148 23410
1309 23212

47 CFR
123417
Proposed Rules:
1 23431

48 CFR
1802 23423
1806 23423
1815 23423
1816 23423
1843 23423
1845 23424

49 CFR
Proposed Rules:
193 23272

50 CFR
300 23224
Proposed Rules:
648 23275

REMINDERS

The items in this list were editorially compiled as an aid to Federal Register users. Inclusion or exclusion from this list has no legal significance.

RULES GOING INTO EFFECT MAY 2, 2003

AGRICULTURE DEPARTMENT

Animal and Plant Health Inspection Service

Exportation and importation of animals and animal products:

Cooked meat and meat products imported from regions where rinderpest or foot-and-mouth disease exists; published 4-2-03

Plant-related quarantine, foreign:

Unshu oranges from Honshu Island, Japan; published 3-3-03

HOMELAND SECURITY DEPARTMENT

Coast Guard

Drawbridge operations:

Florida; published 4-2-03

Virginia; published 4-30-03

HOMELAND SECURITY DEPARTMENT

Transportation Security Administration

Commercial driver's licenses; hazardous materials endorsement applications; security threat assessment standards; published 5-2-03

LABOR DEPARTMENT

Grants, contracts, and other agreements, and States; audit requirements; published 4-2-03

States, local governments, and non-profit organizations; audits; published 4-2-03

NATIONAL AERONAUTICS AND SPACE ADMINISTRATION

Acquisition regulations:

Contracting activity and head of contracting activity; definitions; published 5-2-03

Government property; heritage assets; published 5-2-03

SECURITIES AND EXCHANGE COMMISSION

Securities:

Brokers and dealers; books and records requirements; published 11-2-01

Brokers and dealers; books and records requirements; correction; published 3-31-03

TRANSPORTATION DEPARTMENT

Federal Aviation Administration

Airworthiness directives:

Lindstrand Balloons Ltd.; published 3-11-03

TRANSPORTATION DEPARTMENT

Federal Motor Carrier Safety Administration

Motor carrier safety standards:

Commercial driver's licenses with hazardous materials endorsement; limitations on issuance; published 5-2-03

TRANSPORTATION DEPARTMENT

Research and Special Programs Administration

Hazardous materials:

Hazardous materials transportation—

Security requirements; published 5-2-03

RULES GOING INTO EFFECT MAY 3, 2003

HOMELAND SECURITY DEPARTMENT

Coast Guard

Drawbridge operations:

Florida; published 4-28-03

COMMENTS DUE NEXT WEEK

AGRICULTURE DEPARTMENT

Animal and Plant Health Inspection Service

Exportation and importation of animals and animal products:

Animal health status of foreign regions; recognition requirements; comments due by 5-5-03; published 3-6-03 [FR 03-05280]

Plant-related quarantine, domestic:

Mexican fruit fly; comments due by 5-9-03; published 3-10-03 [FR 03-05594]

Plant pests:

Plants engineered to produce pharmaceutical and industrial compounds; field testing; comments due by 5-9-03; published 3-10-03 [FR 03-05427]

COMMERCE DEPARTMENT

National Oceanic and Atmospheric Administration

Endangered and threatened species:

Recovery plans—

Loggerhead sea turtle; comments due by 5-5-03; published 3-20-03 [FR 03-06714]

Fishery conservation and management:

Caribbean, Gulf, and South Atlantic fisheries—

Gulf of Mexico and South Atlantic coastal migratory pelagic resources, etc.; comments due by 5-5-03; published 3-4-03 [FR 03-05048]

Magnuson-Stevens Act provisions—

Domestic fisheries; exempted fishing permit applications; comments due by 5-5-03; published 4-18-03 [FR 03-09636]

Space-based data collection systems; policies and procedures; comments due by 5-8-03; published 4-8-03 [FR 03-08184]

EDUCATION DEPARTMENT

Elementary and secondary education:

Elementary and Secondary Education Act; implementation—

Unsafe School Choice Option; dangerous schools identification and transfer opportunity for student victims of violent criminal offenses; comments due by 5-7-03; published 4-7-03 [FR 03-08400]

ENVIRONMENTAL PROTECTION AGENCY

Air quality implementation plans; approval and promulgation; various States:

Massachusetts; comments due by 5-8-03; published 4-8-03 [FR 03-08359]

ENVIRONMENTAL PROTECTION AGENCY

Air quality implementation plans; approval and promulgation; various States:

Massachusetts; comments due by 5-8-03; published 4-8-03 [FR 03-08360]

ENVIRONMENTAL PROTECTION AGENCY

Air quality implementation plans; approval and promulgation; various States:

Pennsylvania; comments due by 5-7-03; published 4-7-03 [FR 03-08361]

ENVIRONMENTAL PROTECTION AGENCY

Air quality implementation plans; approval and promulgation; various States:

Pennsylvania; comments due by 5-7-03; published 4-7-03 [FR 03-08362]

ENVIRONMENTAL PROTECTION AGENCY

Hazardous waste program authorizations:

Oklahoma; comments due by 5-9-03; published 4-9-03 [FR 03-08667]

ENVIRONMENTAL PROTECTION AGENCY

Hazardous waste program authorizations:

Oklahoma; comments due by 5-9-03; published 4-9-03 [FR 03-08668]

ENVIRONMENTAL PROTECTION AGENCY

Pesticides; tolerances in food, animal feeds, and raw agricultural commodities:

Aluminum tris (O-ethylphosphonate); comments due by 5-9-03; published 3-10-03 [FR 03-05616]

FEDERAL COMMUNICATIONS COMMISSION

Common carrier services:

Federal-State Joint Board on Universal Service—

High-cost universal service support and eligible telecommunications carrier designation process; comments due by 5-5-03; published 3-5-03 [FR 03-05155]

Telephone Consumer Protection Act; implementation—

Do-Not-Call Implementation Act; comments due by 5-5-03; published 4-3-03 [FR 03-08077]

Radio stations; table of assignments:

California; comments due by 5-5-03; published 3-28-03 [FR 03-07467]

Colorado; comments due by 5-5-03; published 4-7-03 [FR 03-08402]

Georgia; comments due by 5-5-03; published 4-7-03 [FR 03-08403]

Oklahoma and Texas; comments due by 5-5-03; published 3-28-03 [FR 03-07471]

Texas; comments due by 5-5-03; published 3-28-03 [FR 03-07469]

Various States; comments due by 5-5-03; published 3-28-03 [FR 03-07466]

FEDERAL ELECTION COMMISSION

Bipartisan Campaign Reform Act; implementation:

Presidential candidates and nominating conventions; public financing; comments due by 5-9-03; published 4-15-03 [FR 03-08761]

FEDERAL TRADE COMMISSION

Appliances, consumer; energy consumption and water use information in labeling and advertising:

Comparability ranges—

Clothes washers; comments due by 5-5-03; published 4-3-03 [FR 03-07933]

HEALTH AND HUMAN SERVICES DEPARTMENT

Centers for Medicare & Medicaid Services

Medicare:

Long-term care hospitals; prospective payment system; annual payment rate updates and policy changes; comments due by 5-6-03; published 3-7-03 [FR 03-05206]

HEALTH AND HUMAN SERVICES DEPARTMENT

Food and Drug Administration

Food for human consumption:

Food labeling—

Nutrient content claims; sodium levels definition for term ≥healthy≥; comments due by 5-6-03; published 2-20-03 [FR 03-04100]

HEALTH AND HUMAN SERVICES DEPARTMENT

Energy Employees Occupational Illness Compensation Program Act; implementation:

Special Exposure Cohort; classes of employees designated as members; procedures; comments due by 5-6-03; published 3-25-03 [FR 03-07243]

HOMELAND SECURITY DEPARTMENT

Coast Guard

Ports and waterways safety:

Cleveland Harbor, OH; regulated navigation area; comments due by 5-10-03; published 4-16-03 [FR 03-09358]

INTERIOR DEPARTMENT

Fish and Wildlife Service

Endangered and threatened species:

Recovery plans—

Loggerhead sea turtle; comments due by 5-5-03; published 3-20-03 [FR 03-06714]

INTERIOR DEPARTMENT

National Park Service

Special regulations:

Saguaro National Park, AZ; designated bicycle routes; comments due by 5-6-03; published 3-7-03 [FR 03-05501]

JUSTICE DEPARTMENT

Parole Commission

Federal prisoners; paroling and releasing, etc.:

District of Columbia and United States Code; prisoners serving sentences—

Conditions for release; comments due by 5-7-03; published 4-7-03 [FR 03-07849]

NUCLEAR REGULATORY COMMISSION

Fee schedules revision; 94% fee recovery (2003 FY); comments due by 5-5-03; published 4-3-03 [FR 03-07814]

Correction; comments due by 5-5-03; published 4-14-03 [FR C3-07814]

PERSONNEL MANAGEMENT OFFICE

Practice and procedure:

Agency regulations; posting notices; comments due by 5-5-03; published 3-6-03 [FR 03-05021]

TRANSPORTATION DEPARTMENT

Federal Aviation Administration

Air carrier certification and operations:

Aging airplane safety; inspections and records reviews; comments due by 5-5-03; published 2-4-03 [FR 03-02679]

TRANSPORTATION DEPARTMENT

Federal Aviation Administration

Air traffic operating and flight rules, etc.:

Area navigation and miscellaneous amendments; comments due by 5-8-03; published 4-8-03 [FR 03-08286]

TRANSPORTATION DEPARTMENT

Federal Aviation Administration

Airworthiness directives:

Airbus; comments due by 5-5-03; published 4-3-03 [FR 03-08065]

Eurocopter France; comments due by 5-6-03; published 3-7-03 [FR 03-05250]

Iniziative Industriali Italiane S.p.A.; comments due by 5-9-03; published 4-3-03 [FR 03-08048]

Pratt & Whitney; comments due by 5-7-03; published 4-7-03 [FR 03-08328]

TRANSPORTATION DEPARTMENT

Federal Aviation Administration

Airworthiness directives:

Wytwornia Sprzetu Komunikacyjnego (WSK) PZL-Rzeszow S.A.; comments due by 5-5-03; published 3-6-03 [FR 03-05246]

TRANSPORTATION DEPARTMENT

Federal Aviation Administration

Class E2 airspace; comments due by 5-5-03; published 4-3-03 [FR 03-08127]

Class E5 airspace; comments due by 5-5-03; published 4-3-03 [FR 03-08129]

LIST OF PUBLIC LAWS

This is a continuing list of public bills from the current session of Congress which have become Federal laws. It may be used in conjunction with "P L U S" (Public Laws Update Service) on 202–741–6043. This list is also available online at *http://www.nara.gov/fedreg/plawcurr.html*.

The text of laws is not published in the **Federal Register** but may be ordered in "slip law" (individual pamphlet) form from the Superintendent of Documents, U.S. Government Printing Office, Washington, DC 20402 (phone, 202–512–1808). The text will also be made available on the Internet from GPO Access at *http://www.access.gpo.gov/nara/nara005.html*. Some laws may not yet be available.

H.R. 1770/P.L. 108–20

Smallpox Emergency Personnel Protection Act of 2003 (Apr. 30, 2003; 117 Stat. 638)

S. 151/P.L. 108–21

Prosecutorial Remedies and Other Tools to end the Exploitation of Children Today Act of 2003 (Apr. 30, 2003; 117 Stat. 650)

Last List April 29, 2003

Public Laws Electronic Notification Service (PENS)

PENS is a free electronic mail notification service of newly enacted public laws. To subscribe, go to *http://listserv.gsa.gov/archives/publaws-l.html*

Note: This service is strictly for E-mail notification of new laws. The text of laws is not available through this service. **PENS** cannot respond to specific inquiries sent to this address.