AUTHENTICATED
U.S. GOVERNMENT
INFORMATION
GPO

Federal Register

7–31–03 Thursday
Vol. 68 No. 147 July 31, 2003

Pages 44857–45156

The **FEDERAL REGISTER** (ISSN 0097–6326) is published daily, Monday through Friday, except official holidays, by the Office of the Federal Register, National Archives and Records Administration, Washington, DC 20408, under the Federal Register Act (44 U.S.C. Ch. 15) and the regulations of the Administrative Committee of the Federal Register (1 CFR Ch. I). The Superintendent of Documents, U.S. Government Printing Office, Washington, DC 20402 is the exclusive distributor of the official edition. Periodicals postage is paid at Washington, DC.

The **FEDERAL REGISTER** provides a uniform system for making available to the public regulations and legal notices issued by Federal agencies. These include Presidential proclamations and Executive Orders, Federal agency documents having general applicability and legal effect, documents required to be published by act of Congress, and other Federal agency documents of public interest.

Documents are on file for public inspection in the Office of the Federal Register the day before they are published, unless the issuing agency requests earlier filing. For a list of documents currently on file for public inspection, see *http://www.nara.gov/fedreg.*

The seal of the National Archives and Records Administration authenticates the Federal Register as the official serial publication established under the Federal Register Act. Under 44 U.S.C. 1507, the contents of the **Federal Register** shall be judicially noticed.

The **Federal Register** is published in paper and on 24x microfiche. It is also available online at no charge as one of the databases on GPO Access, a service of the U.S. Government Printing Office.

The online edition of the **Federal Register** *www.access.gpo.gov/nara,* available through GPO Access, is issued under the authority of the Administrative Committee of the Federal Register as the official legal equivalent of the paper and microfiche editions (44 U.S.C. 4101 and 1 CFR 5.10). It is updated by 6 a.m. each day the **Federal Register** is published and includes both text and graphics from Volume 59, Number 1 (January 2, 1994) forward.

For more information about GPO Access, contact the GPO Access User Support Team, call toll free 1-888-293-6498; DC area 202-512-1530; fax at 202-512-1262; or via email at *gpoaccess@gpo.gov.* The Support Team is available between 7:00 a.m. and 5:30 p.m. Eastern Time, Monday–Friday, except official holidays.

The annual subscription price for the **Federal Register** paper edition is $699, or $764 for a combined **Federal Register, Federal Register** Index and List of CFR Sections Affected (LSA) subscription; the microfiche edition of the **Federal Register** including the **Federal Register** Index and LSA is $264. Six month subscriptions are available for one-half the annual rate. The charge for individual copies in paper form is $10.00 for each issue, or $10.00 for each group of pages as actually bound; or $2.00 for each issue in microfiche form. All prices include regular domestic postage and handling. International customers please add 40% for foreign handling. Remit check or money order, made payable to the Superintendent of Documents, or charge to your GPO Deposit Account, VISA, MasterCard, American Express, or Discover. Mail to: New Orders, Superintendent of Documents, P.O. Box 371954, Pittsburgh, PA 15250-7954; or call toll free 1-866-512-1800, DC area 202-512-1800; or go to the U.S. Government Online Bookstore site, *bookstore@gpo.gov.*

There are no restrictions on the republication of material appearing in the **Federal Register.**

How To Cite This Publication: Use the volume number and the page number. Example: 68 FR 12345.

Postmaster: Send address changes to the Superintendent of Documents, Federal Register, U.S. Government Printing Office, Washington DC 20402, along with the entire mailing label from the last issue received.

SUBSCRIPTIONS AND COPIES

PUBLIC	
Subscriptions:	
Paper or fiche	**202–512–1800**
Assistance with public subscriptions	**202–512–1806**
General online information	**202–512–1530; 1–888–293–6498**
Single copies/back copies:	
Paper or fiche	**202–512–1800**
Assistance with public single copies	**1–866–512–1800 (Toll-Free)**
FEDERAL AGENCIES	
Subscriptions:	
Paper or fiche	**202–741–6005**
Assistance with Federal agency subscriptions	**202–741–6005**

What's NEW!

Federal Register Table of Contents via e-mail

Subscribe to FEDREGTOC, to receive the **Federal Register** Table of Contents in your e-mail every day.

If you get the HTML version, you can click directly to any document in the issue.

To subscribe, go to **http://listserv.access.gpo.gov** and select:

Online mailing list archives
FEDREGTOC-L
Join or leave the list

Then follow the instructions.

Printed on recycled paper.

Contents

Federal Register

Vol. 68, No. 147

Thursday, July 31, 2003

Advisory Council on Historic Preservation
See Historic Preservation, Advisory Council

Agency for Healthcare Research and Quality
NOTICES
Medicare and Medicaid:
Hospital consumer assessment of health plans survey; volunteer test sites request, 44951–44953
Meetings:
Heathcare Research and Quality Technical Review Committee, 44953–44954

Agricultural Marketing Service
RULES
Raisins produced from grapes grown in California
Reserve raisins intended for use as cattle feed; additional storage payment reduction, 44857–44859

Agriculture Department
See Agricultural Marketing Service
See Food Safety and Inspection Service
See Forest Service

Army Department
NOTICES
Environmental statements; availability, etc.:
Fort Polk, LA; force transformation and mission capability enhancements, 44929–44930

Centers for Disease Control and Prevention
NOTICES
Meetings:
Disease, Disability, and Injury Prevention and Control Special Emphasis Panels, 44954

Children and Families Administration
NOTICES
Grants and cooperative agreements; availability, etc.:
Head Start programs—
Hispanic/Latino children and their families; correction, 44990
Historically Black Colleges and Universities; correction, 44954

Coast Guard
RULES
Anchorage regulations:
Maine, 44886–44888
Ports and waterways safety:
Lake Michigan, Navy Pier, Chicago, IL; 2003 Tall Ships Challenge and Parade of Ships; regulated navigation area, 44890–44892
Lake Washington, Seattle, WA; safety zone, 44888–44890
Regattas and marine parades:
Defender's Day Celebration fireworks display, 44884
Point Pleasant OPA/NJ Offshore Grand Prix, 44884–44886

Commerce Department
See International Trade Administration
See National Oceanic and Atmospheric Administration

Council on Environmental Quality
NOTICES
Meetings:
Energy Project Streamlining, White House Task Force, 44950

Defense Department
See Army Department
See Navy Department
RULES
Civilian health and medical program of uniformed services (CHAMPUS):
TRICARE program—
Deductibles waiver, prime enrollment period clarification, and enrollment in TRICARE Prime Remote for active duty family members, 44882–44884
Nonavailability statement, referral authorization requirements, and specialized treatment services program elimination, 44878–44882
NOTICES
Environmental statements; availability, etc.:
Missile Defense Agency; Ground-Based Midcourse Defense Extended Test Range; correction, 44928
Meetings:
Science Board, 44928–44929

Energy Department
See Federal Energy Regulatory Commission

Environmental Protection Agency
PROPOSED RULES
Air programs:
Accidental release prevention requirements; risk management program requirements; submission schedule and data requirements, 45123–45132
Outer Continental Shelf regulations—
California; consistency update, 44914–44918
NOTICES
Agency information collection activities; proposals, submissions, and approvals, 44945–44949
Toxic and hazardous substances control:
Chemical testing—
Data receipt, 44949–44950

Environmental Quality Council
See Council on Environmental Quality

Executive Office of the President
See Council on Environmental Quality
See Management and Budget Office
See Presidential Documents

Federal Aviation Administration
RULES
Airworthiness directives:
Empresa Brasileira de Aeronautica S.A. (EMBRAER), 44871–44874
Airworthiness standards:
Transport category airplanes—
Thermal/acoustic insulation materials; improved flammability standards, 45045–45084

Class E5 airspace, 44874–44875
Class E airspace, 44875–44876
PROPOSED RULES
Airworthiness directives:
Rolls-Royce plc, 44902–44904
NOTICES
Agency information collection activities; submissions, proposals, and approvals, 44985
Environmental statements; availability, etc.:
Fort Polk, LA; force transformation and mission capability enhancements, 44929–44930
Passenger facility charges; applications, etc.:
Mahlon Sweet Field, OR, 44986
Reports and guidance documents; availability, etc.:
Part 23 airplanes; equipment, systems, and installations; hazardous misleading heading information, 44986

Federal Bureau of Investigation
NOTICES
Agency information collection activities; proposals, submissions, and approvals, 44969

Federal Energy Regulatory Commission
NOTICES
Agency information collection activities; proposals, submissions, and approvals, 44930–44931
Electric rate and corporate regulation filings:
American Electric Power Co. et al., 44937–44939
Environmental statements; availability, etc.:
Lake Dorothy Hydro, Inc., 44939
Safe Harbor Water Power Corp., 44940
Hydroelectric applications, 44940–44945
Applications, hearings, determinations, etc.:
Calpine Corp. et al., 44931–44932
CenterPoint Energy Gas Transmission Co., 44932–44933
CenterPoint Energy-Mississippi River Transmission Corp., 44932
Columbia Gulf Transmission Co., 44933
Dominion Cove Point LNG, LP, 44933–44934
Dominion Transmission, Inc., 44934
Gulfstream Natural Gas System, L.L.C., 44934
Northeast Utilities Service Co. et al., 44935
North Hartland, LLC, 44934–44935
Northwest Pipeline Corp., 44935–44936
Southern Star Central Gas Pipeline, Inc., 44936–44937
Wisconsin Gas Co., 44937

Federal Reserve System
NOTICES
Banks and bank holding companies:
Formations, acquisitions, and mergers, 44950–44951

Federal Trade Commission
RULES
Telemarketing sales rule:
National Do-Not-Call Registry; user fees, 45133–45144

Fish and Wildlife Service
NOTICES
Agency information collection activities; proposals, submissions, and approvals, 44961–44965
Comprehensive conservation plans; availability, etc.:
Mark Twain National Wildlife Refuge Complex, IA, IL, and MO, 44965
Grants and cooperative agreements; availability, etc.:
North American Wetlands Conservation Act—
Small Grants Program, 44965–44966

Food and Drug Administration
RULES
Animal drugs, feeds, and related products:
Sponsor name and address changes—
Schering-Plough Animal Health Corp., 44878
NOTICES
Human drugs:
Patent extension; regulatory review period determinations—
BENICAR, 44954–44955
Meetings:
Anesthetic and Life Support Drugs Advisory Committee, 44955–44956
Food Advisory Committee, 44956

Food Safety and Inspection Service
RULES
Pizza with meat or sausage identity standards; elimination, 44859–44870

Forest Service
NOTICES
Environmental statements; availability, etc.:
Fort Polk, LA; force transformation and mission capability enhancements, 44929–44930
Environmental statements; notice of intent:
Salmon-Challis National Forest, ID, 44919–44920
Meetings:
Klamath Provincial Advisory Committee, 44920–44921

Health and Human Services Department
See Agency for Healthcare Research and Quality
See Centers for Disease Control and Prevention
See Children and Families Administration
See Food and Drug Administration
See Health Resources and Services Administration
See Substance Abuse and Mental Health Services Administration
NOTICES
Meetings:
Health Care Policy and Research Special Emphasis Panel, 44951
Organization, functions, and authority delegations:
Administrator, Health Resources and Services Administration, 44951

Health Resources and Services Administration
NOTICES
Agency information collection activities; proposals, submissions, and approvals, 44956–44958
Grants and cooperative agreements; availability, etc.:
Rural Health Network Development Planning Program, 44958–44960

Historic Preservation, Advisory Council
NOTICES
Meetings, 44919

Homeland Security Department
See Coast Guard

Interior Department
See Fish and Wildlife Service
See Land Management Bureau
See Minerals Management Service
See Surface Mining Reclamation and Enforcement Office

NOTICES
Meetings:
Blackstone River Valley National Heritage Corridor Commission, 44961

Internal Revenue Service
PROPOSED RULES
Income taxes:
Low-income housing tax credit; section 42 carryover and stacking rule amendments
Hearing, 44904–44905
Procedure and administration:
Designated or related summonses; effect on period of limitations, etc., 44905–44909

International Trade Administration
NOTICES
Antidumping:
Persulfates from—
China, 44921–44924
Polychloroprene rubber from—
Japan, 44924–44925

International Trade Commission
NOTICES
Import investigations:
Display controllers and products containing same, 44967

Justice Department
See Federal Bureau of Investigation
See Justice Programs Office
NOTICES
Pollution control; consent judgments:
Icicle Seafoods, Inc., 44967–44968
South Haven Sewer Works, Inc., 44968

Justice Programs Office
NOTICES
Agency information collection activities; proposals, submissions, and approvals, 44969–44970

Labor Department
See Occupational Safety and Health Administration

Land Management Bureau
NOTICES
Meetings:
Resource Advisory Councils—
Upper Columbia-Salmon Clearwater District, 44966–44967

Management and Budget Office
NOTICES
Agency information collection activities; proposals, submissions, and approvals, 44974–44975

Merit Systems Protection Board
NOTICES
Agency information collection activities; proposals, submissions, and approvals, 44971–44972

Minerals Management Service
PROPOSED RULES
Outer Continental Shelf; oil, gas, and sulphur operations:
Incident reporting requirements, 44910
Meeting, 44909

National Aeronautics and Space Administration
NOTICES
Agency information collection activities; proposals, submissions, and approvals, 44972–44973
Patent licenses; non-exclusive, exclusive, or partially exclusive:
Schaffer Test Products, Inc., 44973

National Highway Traffic Safety Administration
RULES
Motor vehicle safety standards:
Multifunction school activity bus; definition, 44892–44901
NOTICES
Motor vehicle safety standards:
Nonconforming vehicles—
Importation eligibility; determinations, 44986–44987

National Oceanic and Atmospheric Administration
PROPOSED RULES
Fishery conservation and management:
Northeastern United States fisheries—
New England Fishery Management Council; meetings, 44918
NOTICES
Environmental statements; notice of intent:
Western North Atlantic coast; bottlenose dolphin; take reduction plan, 44925–44926
Meetings:
New England Fishery Management Council, 44926
North Pacific Fishery Management Council, 44926–44927
Permits:
Exempted fishing, 44927–44928

Navy Department
NOTICES
Inventions, Government-owned; availability for licensing, 44930

Nuclear Regulatory Commission
RULES
Nuclear equipment and material; export and import:
Major nuclear reactor components; general import license, 44870
NOTICES
Agency information collection activities; proposals, submissions, and approvals, 44973–44974
Reports and guidance documents; availability, etc.:
Yucca Mountain, NV; review plan and final report, 45085–45122

Occupational Safety and Health Administration
NOTICES
Committees; establishment, renewal, termination, etc.:
Occupational Safety and Health Maritime Advisory Committee, 44970–44971

Office of Management and Budget
See Management and Budget Office

Personnel Management Office
PROPOSED RULES
Competitive service and status; regulatory review, 44902
NOTICES
Agency information collection activities; proposals, submissions, and approvals, 44975–44976

Presidential Documents

PROCLAMATIONS

Special observances:
Death of Bob Hope (Proc. 7694), 45145–45147

EXECUTIVE ORDERS

Homeland security; delegation of Presidential functions (EO 13311), 45149–45150
Rough diamonds; prohibition on importation under the Clean Diamond Trade Act (EO 13312), 45151–45152

ADMINISTRATIVE ORDERS

Government agencies and employees:
Office of Personnel Management; delegation of authority (Memo. of July 8), 45153–45155

Research and Special Programs Administration

RULES

Hazardous materials:
Hazardous materials transportation—
Harmonization with UN recommendations, International Maritime Dangerous Goods Code, and International Civil Aviation Organization's technical instructions, 44991–45043

Securities and Exchange Commission

RULES

Electronic Data Gathering, Analysis, and Retrieval System (EDGAR):
Filer Manual; update adoption and incorporation by reference, 44876–44878

NOTICES

Agency information collection activities; proposals, submissions, and approvals, 44976
Investment Company Act of 1940:
Deregistration applications—
Nuveen Municipal Money Market Fund, Inc., et al., 44976–44977
Meetings; Sunshine Act, 44977–44978
Self-regulatory organizations; proposed rule changes:
Chicago Board Options Exchange, Inc., 44978–44980
National Association of Securities Dealers, Inc., 44980–44984

Small Business Administration

NOTICES

Agency information collection activities; proposals, submissions, and approvals, 44984–44985
Disaster loan areas:
Nebraska, 44985
Texas, 44985

Substance Abuse and Mental Health Services Administration

NOTICES

Grant and cooperative agreement awards:
Ohio Alcohol and Drug Addictions Service Department, 44960–44961

Surface Mining Reclamation and Enforcement Office

PROPOSED RULES

Permanent program and abandoned mine land reclamation plan submissions:
West Virginia, 44910–44913

Surface Transportation Board

NOTICES

Agency information collection activities; proposals, submissions, and approvals, 44987–44988

Transportation Department

See Federal Aviation Administration
See National Highway Traffic Safety Administration
See Research and Special Programs Administration
See Surface Transportation Board

Treasury Department

See Internal Revenue Service

Veterans Affairs Department

PROPOSED RULES

Medical benefits:
Sensori-neural aids; extension to Purple Heart recipients, 44913–44914

NOTICES

Real property; enhanced-use leases:
Syracuse, NY; Veterans Affairs Department Medical Center, 44988–44989

Separate Parts In This Issue

Part II
Transportation Department, Research and Special Programs Administration, 44991–45043

Part III
Transportation Department, Federal Aviation Administration, 45045–45084

Part IV
Nuclear Regulatory Commission, 45085–45122

Part V
Environmental Protection Agency, 45123–45132

Part VI
Federal Trade Commission, 45133–45144

Part VII
Executive Office of the President, Presidential Documents, 45145–45147, 45149–45152

Part VIII
Executive Office of the President, Presidential Documents, 45153–45155

Reader Aids

Consult the Reader Aids section at the end of this issue for phone numbers, online resources, finding aids, reminders, and notice of recently enacted public laws.

To subscribe to the Federal Register Table of Contents LISTSERV electronic mailing list, go to http://listserv.access.gpo.gov and select Online mailing list archives, FEDREGTOC-L, Join or leave the list (or change settings); then follow the instructions.

CFR PARTS AFFECTED IN THIS ISSUE

A cumulative list of the parts affected this month can be found in the Reader Aids section at the end of this issue.

3 CFR

Proclamations:
7694 45147

Executive Orders:
12958 (See EO 13311) 45149
12968 (See EO 13311) 45149
13194 (Amended by: EO 13312) 45151
13213 (Amended by: EO 13312) 45151
13311 45149
13312 45151

Administrative Orders:
Memorandum of July 8, 2003 45155

5 CFR

Proposed Rules:
212 44902

7 CFR
989 44857

9 CFR
319 44859

10 CFR
110 44870

14 CFR
25 45046
39 44871
71 (2 documents) 44874, 44875
91 45046
121 45046
125 45046
135 45046

Proposed Rules:
39 44902

16 CFR
310 45134

17 CFR
232 44876

21 CFR
526 44878

26 CFR

Proposed Rules:
1 44904
301 44905

30 CFR

Proposed Rules:
250 (2 documents) 44909, 44910
254 (2 documents) 44909, 44910
948 44910

32 CFR
199 (2 documents) 44878, 44882

33 CFR
100 (2 documents) 44884
110 44886
165 (2 documents) 44888, 44890

38 CFR

Proposed Rules:
17 44913

40 CFR

Proposed Rules:
55 44914
68 45124

49 CFR
171 44992
172 44992
173 44992
175 44992
176 44992
178 44992
180 44992
571 44892

50 CFR

Proposed Rules:
648 44918

Rules and Regulations

Federal Register
Vol. 68, No. 147
Thursday, July 31, 2003

This section of the FEDERAL REGISTER contains regulatory documents having general applicability and legal effect, most of which are keyed to and codified in the Code of Federal Regulations, which is published under 50 titles pursuant to 44 U.S.C. 1510.

The Code of Federal Regulations is sold by the Superintendent of Documents. Prices of new books are listed in the first FEDERAL REGISTER issue of each week.

DEPARTMENT OF AGRICULTURE

Agricultural Marketing Service

7 CFR Part 989

[Docket No. FV03–989–7 IFR]

Raisins Produced From Grapes Grown in California; Reduction in Additional Storage Payments Regarding Reserve Raisins Intended for Use as Cattle Feed

AGENCY: Agricultural Marketing Service, USDA.

ACTION: Interim final rule with request for comments.

SUMMARY: This rule reduces the additional holding and storage payments regarding 2002 Natural (sun-dried) Seedless reserve raisins that are carried into the 2003 crop year and intended for use as cattle feed. The crop year runs from August 1 through July 31. Such payments are authorized under the Federal marketing order for California raisins (order). The order regulates the handling of raisins produced from grapes grown in California and is administered locally by the Raisin Administrative Committee (RAC). This action will reduce expenses incurred by the 2002 reserve pool and thereby help improve returns to 2002 equity holders, primarily raisin producers.

DATES: Effective August 1, 2003. Comments received by September 29, 2003, will be considered prior to issuance of a final rule.

ADDRESSES: Interested persons are invited to submit written comments concerning this rule. Comments must be sent to the Docket Clerk, Marketing Order Administration Branch, Fruit and Vegetable Programs, AMS, USDA, 1400 Independence Avenue SW., STOP 0237, Washington, DC 20250–0237; Fax: (202) 720–8938, or E-mail: *moab.docketclerk@usda.gov.* All comments should reference the docket number and the date and page number of this issue of the **Federal Register** and will be made available for public inspection in the Office of the Docket Clerk during regular business hours, or can be viewed at: *http://www.ams.usda.gov/fv/moab.html.*

FOR FURTHER INFORMATION CONTACT: Maureen T. Pello, Senior Marketing Specialist, California Marketing Field Office, Marketing Order Administration Branch, Fruit and Vegetable Programs, AMS, USDA, 2202 Monterey Street, suite 102B, Fresno, California 93721; telephone: (559) 487–5901, Fax: (559) 487–5906; or George Kelhart, Technical Advisor, Marketing Order Administration Branch, Fruit and Vegetable Programs, AMS, USDA, 1400 Independence Avenue SW., STOP 0237, Washington, DC 20250–0237; telephone: (202) 720–2491, Fax: (202) 720–8938.

Small businesses may request information on complying with this regulation by contacting Jay Guerber, Marketing Order Administration Branch, Fruit and Vegetable Programs, AMS, USDA, 1400 Independence Avenue SW., STOP 0237, Washington, DC 20250–0237; telephone: (202) 720–2491, Fax: (202) 720–8938, or E-mail: *Jay.Guerber@usda.gov.*

SUPPLEMENTARY INFORMATION: This rule is issued under Marketing Agreement and Order No. 989 (7 CFR part 989), both as amended, regulating the handling of raisins produced from grapes grown in California, hereinafter referred to as the ''order.'' The order is effective under the Agricultural Marketing Agreement Act of 1937, as amended (7 U.S.C. 601–674), hereinafter referred to as the ''Act.''

The Department of Agriculture (USDA) is issuing this rule in conformance with Executive Order 12866.

This rule has been reviewed under Executive Order 12988, Civil Justice Reform. This rule is not intended to have retroactive effect. This rule will not preempt any State or local laws, or policies, unless they present an irreconcilable conflict with this rule.

The Act provides that administrative proceedings must be exhausted before parties may file suit in court. Under section 608c(15)(A) of the Act, any handler subject to an order may file with USDA a petition stating that the order, any provision of the order, or any obligation imposed in connection with the order is not in accordance with law and request a modification of the order or to be exempted therefrom. A handler is afforded the opportunity for a hearing on the petition. After the hearing USDA would rule on the petition. The Act provides that the district court of the United States in any district in which the handler is an inhabitant, or has his or her principal place of business, has jurisdiction to review USDA's ruling on the petition, provided an action is filed not later than 20 days after the date of the entry of the ruling.

This rule reduces the additional holding and storage payments regarding 2002 NS reserve raisins that are carried into the 2003 crop year and intended for use as cattle feed. The crop year runs from August 1 through July 31. Under the order, handlers are compensated for receiving, storing, fumigating, and handling reserve tonnage raisins acquired during a crop year. The order also authorizes additional payments for reserve raisins held beyond the crop year of acquisition. The RAC met on July 2, 2003, and unanimously recommended that additional payments for reserve raisins intended for use as cattle feed accrue beginning September 13, 2003, rather than August 1, 2003. This action will reduce expenses incurred by the 2002 reserve pool and thereby help improve returns to 2002 equity holders, primarily raisin producers.

Volume Regulation Provisions

The order provides authority for volume regulation designed to promote orderly marketing conditions, stabilize prices and supplies, and improve producer returns. When volume regulation is in effect, a certain percentage of the California raisin crop may be sold by handlers to any market (free tonnage) while the remaining percentage must be held by handlers in a reserve pool (reserve) for the account of the RAC. Reserve raisins are disposed of through various programs authorized under the order. For example, reserve raisins may be sold by the RAC to handlers for free use or to replace part of the free tonnage they exported; carried over as a hedge against a short crop the following year; or may be disposed of in other outlets not competitive with those for free tonnage

raisins, such as government purchase, distilleries, or animal feed. Net proceeds from sales of reserve raisins are ultimately distributed to the reserve pool's equity holders, primarily producers.

Costs Regarding Holding and Storage of Reserve Raisins

Section 989.66(f) of the order specifies that handlers be compensated for receiving, storing, fumigating, and handling that tonnage of reserve raisins determined by the reserve percentage of a crop year and held by them for the account of the RAC, in accordance with a schedule of payments established by the RAC and approved by the Secretary. Further, the RAC must pay rent to producers or handlers for boxes used in storing reserve raisins held beyond the crop year of acquisition. As previously mentioned, the crop year runs from August 1 through July 31.

Section 989.401(b) of the order's rules and regulations specifies additional payments to handlers for storing, handling, and fumigating reserve raisins held beyond the crop year of acquisition. Specifically, handlers must be compensated for such raisins at a rate of $2.30 per ton for the first 3 months (August through October), and at a rate of $1.18 per ton per month for the remaining 9 months (November through July).

Section 989.401(c) specifies further payment of rental on boxes and bins containing raisins held beyond the crop year of acquisition. Specifically, persons who furnish boxes or bins used for storing reserve raisins held for the account of the RAC on August 1 are compensated for the use of such containers as follows: For boxes, 2½ cents per day, not to exceed a total payment of $1.00 per box per year, per average net weight of raisins in a sweatbox, with equivalent rates for raisins in boxes other than sweatboxes; and for bins, 20 cents per day per bin, not to exceed a total of $10.00 per bin per year.

Disposal Program

Pursuant to § 989.67(b) of the order, the RAC is implementing a program to dispose of 40,000 tons of 2002 NS reserve raisins for use as cattle feed. The tonnage is stored at handler facilities and will be adulterated to ensure that the raisins remain in non-commercial channels. The program is intended to help the industry reduce its burdensome oversupply of raisins. It will also help make available bins for storing raisins during the new crop year, which begins August 1, 2003. Barring unforeseen circumstances, reserve tonnage intended for use as cattle feed should be removed from handler premises by mid-September 2003.

RAC Recommendation

The RAC met on July 2, 2003, and unanimously recommended reducing the additional holding and storage payments regarding 2002 NS reserve raisins held by handlers on August 1, 2003, and intended for use as cattle feed. Specifically, additional payments for such raisins will accrue beginning September 13, 2003, rather than August 1, 2003. Thus, additional costs will only be incurred for such tonnage that remains at handler premises after September 12, 2003. Payments for storing and holding reserve raisins are deducted from reserve pool proceeds, and net proceeds are ultimately distributed to equity holders. Thus, reducing the expenses for 2002 NS reserve tonnage intended for use as cattle feed will help improve returns to 2002 equity holders.

Initial Regulatory Flexibility Analysis

Pursuant to requirements set forth in the Regulatory Flexibility Act (RFA), the Agricultural Marketing Service (AMS) has considered the economic impact of this action on small entities. Accordingly, AMS has prepared this initial regulatory flexibility analysis.

The purpose of the RFA is to fit regulatory actions to the scale of business subject to such actions in order that small businesses will not be unduly or disproportionately burdened. Marketing orders issued pursuant to the Act, and rules issued thereunder, are unique in that they are brought about through group action of essentially small entities acting on their own behalf. Thus, both statutes have small entity orientation and compatibility.

There are approximately 20 handlers of California raisins who are subject to regulation under the order and approximately 4,500 raisin producers in the regulated area. Small agricultural service firms are defined by the Small Business Administration (13 CFR 121.201) as those having annual receipts of less than $5,000,000, and small agricultural producers are defined as those having annual receipts of less than $750,000. Thirteen of the 20 handlers subject to regulation have annual sales estimated to be at least $5,000,000, and the remaining 7 handlers have sales less than $5,000,000. No more than 7 handlers, and a majority of producers, of California raisins may be classified as small entities.

This rule reduces the additional holding and storage payments specified in paragraphs (b) and (c) of § 989.401 regarding 2002 NS reserve raisins that are intended for use as cattle feed. Specifically, additional payments for such raisins will accrue beginning September 13, 2003, rather than August 1, 2003. Under the order, handlers are compensated for receiving, storing, fumigating, and handling reserve tonnage raisins acquired during a crop year. The order also authorizes additional holding and storage payments for reserve raisins held beyond the crop year of acquisition. This action reduces these additional payments for 2002 NS reserve raisins held by handlers on August 1, 2003, that are intended for use as cattle feed. Authority for this action is provided in § 989.66(f) of the order.

Regarding the impact of this rule on affected entities, handlers and producers, the order provides that handlers store reserve raisins for the account of the RAC. Net proceeds from sales of such reserve raisins are distributed to the reserve pool's equity holders, primarily producers. Handlers are compensated from reserve pool funds for their costs in receiving, storing, fumigating, and handling reserve raisins during the crop year of acquisition and for the subsequent crop year. Compensation is also paid for the use of bins and boxes for storing reserve raisins held beyond the crop year of acquisition.

Under the disposal program, it is estimated that about 22,500 tons of reserve raisins will remain at handler premises after August 1, 2003. If 634 tons were removed per day, costs to store, handle, and fumigate the tonnage at the current rate of $2.30 per day between August 1 and September 12, 2003, would be $59,133.00. Bin-rental costs for the same period at the current rate of $0.20 per day per bin would be $161,966.00. Thus, the RAC would incur an estimated $221,000 for holding and storing 2002 reserve raisins that are intended for use as cattle feed between August 1 and September 12, 2003. This rule will reduce these costs to zero and thereby reduce expenses incurred by the 2002 NS reserve pool. Handlers, however, will not be compensated this amount for holding and storing this tonnage.

Regarding alternatives to this action, one option would be to maintain the status quo and have the 2002 reserve pool incur these costs. However, this would not help to improve returns to 2002 equity holders. Another alternative would be to reduce the payments for the period August 1 through September 12, 2003, to figures lower than those currently specified in § 989.401. However, all RAC members supported

reducing the additional holding and storage payments for 2002 reserve raisins intended for use as cattle feed so that such payments will accrue beginning September 13, 2003, rather than August 1, 2003.

This rule imposes no additional reporting or recordkeeping requirements on either small or large raisin handlers. As with all Federal marketing order programs, reports and forms are periodically reviewed to reduce information requirements and duplication by industry and public sector agencies. Finally, USDA has not identified any relevant Federal rules that duplicate, overlap or conflict with this rule.

Further, the RAC's Administrative Issues Subcommittee and RAC meetings on July 2, 2003, where this action was deliberated were both public meetings widely publicized throughout the raisin industry. All interested persons were invited to attend the meetings and participate in the industry's deliberations. Finally, all interested persons are invited to submit information on the regulatory and informational impacts of this action on small businesses.

A small business guide on complying with fruit, vegetable, and specialty crop marketing agreements and orders may be viewed at: *http://www.ams.usda.gov/fv/moab.html.* Any questions about the compliance guide should be sent to Jay Guerber at the previously mentioned address in the **FOR FURTHER INFORMATION CONTACT** section.

A 60-day comment period is invited to allow interested persons to respond to this rule. All written comments timely received will be considered prior to finalization of this rule.

After consideration of all relevant material presented, including the information and recommendation submitted by the RAC and other available information, it is hereby found that this rule, as hereinafter set forth, will tend to effectuate the declared policy of the Act.

Pursuant to 5 U.S.C. 553, it is also found and determined upon good cause that it is impracticable, unnecessary, and contrary to the public interest to give preliminary notice prior to putting this rule into effect, and that good cause exists for not postponing the effective date of this rule until 30 days after publication in the **Federal Register** because: (1) This action needs to be in place by August 1, 2003, so that additional payments regarding reserve raisins held by handlers on August 1, 2003, and intended for cattle feed will be incurred beginning September 13, 2003, rather than August 1 2003; (2) handlers and producers are aware of this action which was recommended by the RAC at a public meeting; (3) the action was recommended by a unanimous vote of the RAC; and (4) this interim final rule provides a 60-day comment period for written comments and all comments timely received will be considered prior to finalization of this rule.

List of Subjects in 7 CFR Part 989

Grapes, Marketing agreements, Raisins, Reporting and recordkeeping requirements.

■ For the reasons set forth in the preamble, 7 CFR part 989 is amended as follows:

PART 989—RAISINS PRODUCED FROM GRAPES GROWN IN CALIFORNIA

■ 1. The authority citation for 7 CFR part 989 continues to read as follows:

Authority: 7 U.S.C. 601–674.

■ 2. In § 989.401, paragraphs (b) and (c) are revised to read as follows:

§ 989.401 Payments for services performed with respect to reserve tonnage raisins.

* * * * *

(b) *Additional payment for reserve tonnage raisins held beyond the crop year of acquisition.* Additional payment for reserve tonnage raisins held beyond the crop year of acquisition shall be made in accordance with this paragraph. Each handler holding such raisins for the account of the Committee on August 1 shall be compensated for storing, handling, and fumigating such raisins at the rate of $2.30 per ton per month, or any part thereof, between August 1 and October 31, and at the rate of $1.18 per ton per month, or any part thereof, between November 1 and July 31: *Provided,* That handlers holding 2002–03 Natural (sun-dried) Seedless reserve raisins on August 1, 2003, that are intended for use as cattle feed shall be compensated for storing, handling, and fumigating such raisins at the rate of $2.30 per ton per month, or any part thereof, between September 13 and October 31, 2003, and at the rate of $1.18 per ton per month, or any part thereof, between November 1, 2003, and July 31, 2004. Such services shall be completed so that the Committee is assured that the raisins are maintained in good condition.

(c) *Payment of rental on boxes and bins containing raisins held beyond the crop year of acquisition.* Payment of rental on boxes and bins containing reserve tonnage raisins held beyond the crop year of acquisition shall be made in accordance with this paragraph. Each handler, producer, dehydrator, and other person who furnishes boxes or bins in which such raisins are held for the account of the Committee on August 1, shall be compensated for the use of such boxes and bins: *Provided,* That persons holding 2002–03 Natural (sun-dried) Seedless reserve raisins on September 13, 2003, that are intended for use as cattle feed shall be compensated for the use of such boxes and bins, and that no compensation shall be accrued for such raisins held between August 1 and September 12, 2003. The rate of compensation shall be: For boxes, two and one-half cents per day, not to exceed a total payment of $1 per box per year, per average net weight of raisins in a sweatbox, with equivalent rates for raisins in boxes other than sweatboxes; and for bins 20 cents per day per bin, not to exceed a total of $10 per bin per year. For purposes of this paragraph, *box* means any container with a capacity of less than 1,000 pounds, and *bin* means any container with a capacity of 1,000 pounds or more. The average net weight of raisins in each type of box shall be the industry average as computed by the Committee for the box in which the raisins are so held. No further compensation shall be paid unless the raisins are so held in the boxes on the succeeding August 1.

* * * * *

Dated: July 25, 2003.

A.J. Yates,

Administrator, Agricultural Marketing Service.

[FR Doc. 03–19492 Filed 7–28–03; 1:04 pm]

BILLING CODE 3410–02–P

DEPARTMENT OF AGRICULTURE

Food Safety and Inspection Service

9 CFR Part 319

[Docket No. 01–018F]

Definitions and Standards of Identity or Composition: Elimination of the Pizza with Meat or Sausage Standards

AGENCY: Food Safety and Inspection Service, USDA.

ACTION: Final rule.

SUMMARY: The Food Safety and Inspection Service (FSIS) is rescinding the regulatory standards of identity for ''pizza with meat'' and ''pizza with sausage.'' FSIS has determined that the standards no longer serve their original purpose of protecting the public from economic deception. Furthermore, FSIS believes that the standards may be

inhibiting manufacturers of federally inspected pizzas from producing and marketing the styles of pizzas that today's consumers demand. Once this rule becomes effective, products may be identified with a common or usual name that includes the term ''pizza;'' identifies the meat or poultry component, *e.g.,* ''pepperoni;'' and declares other components as a feature that distinguishes them from the other pizza product, e.g. ''pizza—garlic sauce, tomatoes, reduced-fat cheese, and seasoned beef strips on a crust.''

FSIS is also amending the meat and poultry products inspection regulations to require, for a limited time, that the labels of products identified as meat or poultry pizzas in their common or usual names include the percent of meat or poultry in the product in a parenthetical statement that is contiguous to the ingredients statement. This labeling requirement will expire after three years. FSIS is adopting this requirement because, based on comments received in response to the proposed rule, the Agency has concluded that some consumers still rely on the standards to ensure that a product identified as a meat or poultry ''pizza'' contains a certain amount of meat or poultry. FSIS will allow pizza manufacturers to exhaust their remaining packaging inventory before they will be required to comply with the new labeling requirement. Requiring percent labeling of the meat or poultry content of non-standardized pizzas for a limited time is a transitional step to allow these consumers to understand the nature of the food.

DATES: This rule is effective October 22, 2003. Sections 317.8(b)(40) and 381.129(f) shall expire October 24, 2006.

FOR FURTHER INFORMATION CONTACT: Robert C. Post, Ph.D., Director, Labeling and Consumer Protection Staff, Food Safety and Inspection Service, U.S. Department of Agriculture, Washington, DC 20250–3700; (202) 205–0279.

SUPPLEMENTARY INFORMATION:

Background

On November 2, 2001, FSIS published a proposed rule in the **Federal Register** to amend part 319 of the Federal meat inspection regulations to rescind the standards of identity for ''pizza with meat'' and ''pizza with sausage'' (66 FR 55601). The proposed rule was in response to a petition submitted on February 4, 1999, by the National Frozen Pizza Institute (NFPI). In support of its petition, NFPI submitted data to demonstrate that the pizza standards are restricting the development of new products by the frozen pizza industry, including pizzas with reductions in constituents that are of health concern to some people, such as fat and cholesterol. NFPI also presented evidence that, due to product innovation in the food service industry, consumers' expectations of what is meant by the term ''pizza'' are broader that what is prescribed by the current standards.

Once this final rule becomes effective, products identified as meat or sausage pizzas will no longer be required to contain tomato sauce, cheese, and a bread-based crust, as prescribed by the standards under 9 CFR 319.600. In addition, manufacturers of pizza products will be permitted to reduce the minimum meat content from 12 percent cooked or 15 percent raw to 2 percent cooked or 3 percent raw, the level of meat required for a product to be considered a meat food product subject to USDA jurisdiction.

In the preamble to the proposed rule, FSIS mentioned that although the regulations do not contain a standard of identity for pizza products that contain poultry, FSIS has treated these products as ''like products'' to pizza with meat or sausage. The Agency's policy has been that these products must contain at least 12 percent cooked poultry meat. Once this final rule becomes effective, the policy that pizzas that contain poultry must have a minimum poultry content will also be revoked.

As discussed in the preamble to the proposed rule, rescinding the meat and sausage pizza standards of identity does not mean that the names for products identified as ''pizzas'' will be unregulated. Under 9 CFR 317.2(c)(1) and 381.117(a), non-standardized meat and poultry products must be identified by the common or usual name of the product, or if the product has no common or usual name, a truthful, descriptive designation. FSIS has determined that, in the absence of a regulatory standard of identity, the term ''pizza'' represents the appropriate common or usual name for the class of products that have been traditionally formulated with the components stipulated in the regulatory standard prescribed by 9 CFR 319.600, i.e., tomato sauce, cheese, and meat topping on a bread-based crust. Products that contain these ingredients may be identified by a common or usual name that includes the term ''pizza;'' identifies the meat or poultry component, *e.g.,* pepperoni; and declares any other components or features that distinguish it from traditional pizzas, *e.g.,* ''pizza—garlic sauce, tomatoes, reduced-fat cheese, and seasoned beef strips on a crust.''

In the preamble to the proposed rule, FSIS requested comments on whether the product names of non-standardized pizzas should be required to include the percent of meat or poultry. Based on the comments received in response to this question, FSIS has concluded that some consumers still rely on the standards to ensure that a meat or poultry product identified as a ''pizza'' contains a certain amount of meat or poultry. To prevent these consumers from being misled about the meat or poultry content of non-standardized pizzas, the Agency is requiring that the labeling of products that are identified in their common or usual names as pizzas that contain a meat or poultry component (e.g. ''pizza with meat,'' ''sausage, green pepper, and mushroom pizza,'' ''Thai pizza—chicken, peanut sauce, and vegetables on a crust'') include a parenthetical statement of the percent of meat or poultry in the product that is contiguous to the ingredients statement. This labeling requirement will be effective for three years to allow consumers to become familiar with variations in the meat or poultry content that will be permitted in pizzas as non-standardized foods. FSIS will allow manufacturers of meat and poultry pizzas to exhaust their remaining packaging inventory before they will be required to comply with the new labeling requirement.

Comments and Responses

The comment period for the proposed rule closed on January 2, 2002. However, in response to comments requesting that FSIS extend the comment period, on March 14, 2002, the Agency reopened and extended that comment period for an additional 30 days. Thus, the comment period closed on April 15, 2002.

FSIS received 36 comments in response to the proposed rule from consumers, consumer advocacy organizations, members of the frozen pizza industry, academia, industry consultants, and trade and professional associations representing livestock producers, meat processors, food processors, seasoning manufacturers, soy product producers, and dietitians. Most of the commenters supported eliminating the standards of identity for meat and sausage pizzas. In general, the supporters agreed that the standards are restricting the development of new products by the frozen pizza industry, and that consumers, expectations of what is meant by the term ''pizza'' are broader that what is prescribed by the current standards. Eight commenters opposed the proposed rule, mainly because they believe that the current

standards still serve their intended purpose of protecting consumers from economic deception, particularly with regard to the meat content of products identified as meat or sausage pizzas. Three commenters, a trade association representing the frozen foods industry, a trade association representing meat processors, and a large company that manufactures a variety of food products, including frozen pizzas, took no position on whether FSIS should eliminate the existing pizza standards but submitted comments on certain aspects of the proposed rule. Summaries of issues raised by commenters and Agency responses follow.

Comment: As mentioned above, in the preamble to the proposed rule, FSIS stated that, if it were to rescind the pizza standards, it had tentatively determined that required labeling features, such as the product name, ingredients statement, and nutrition facts panel, will provide adequate information for consumers to make informed choices when purchasing federally inspected pizza products (66 FR 55601, 55602). In particular, the Agency concluded that the product name would become a descriptive feature to convey to the consumer the components of the product. The Agency went on to request comments on whether the product name of non-standardized pizzas should be required to include the percent of meat or poultry in the product. Almost all commenters that supported eliminating the pizza standards opposed this proposed requirement. Following is a summary of the reasons for their opposition.

- The product names of pizzas sold by restaurants and delivery services would not be required to contain the percent of meat or poultry in the product, thereby re-establishing different regulatory treatment for the retail and frozen pizza industries.
- Percentage labeling of a specific ingredient is not required for other products regulated by FSIS or the Food and Drug Administration (FDA).
- If the product name for non-standardized pizzas must include the percent of meat or poultry in the product, then it should also be required to include the percent of other characterizing ingredients, such as mushrooms or seasonings, as well.
- Requiring that the percent of meat or poultry in a non-standardized pizza product be included as part of the product name is not necessary because existing required labeling features, including mandatory ingredient and nutrition information, already provide sufficient information about a product's meat or poultry content.
- Requiring percent labeling of the meat content implies that meat is the most valuable ingredient in the product. The amount of meat topping is not the determining characteristic of the product. Consumers also look at overall cost and quality of ingredients used.
- Unlike some other products, the meat content of a pizza is readily apparent with even a superficial visual exam, which allows consumers to assess the value of the product for the price.
- Such information would have little meaning to consumers and could lead to counter productive competitive labeling contests, which would not serve consumers' best interests.
- Percent meat content labeling assumes that all meat toppings are equivalent in cost, which is not an accurate assumption.
- Pizzas subject to FDA and FSIS jurisdiction should be marketed and regulated similarly. FDA has no such specific requirement or any standards for pizzas subject to FDA's jurisdiction.
- Few consumers have a working knowledge of the current standards. Therefore, it is not relevant to require the labeling to include the percentage of meat or poultry in the pizza.
- Requiring percent labeling of the meat or poultry content would require manufacturers to disclose proprietary information, including trademark recipes. Manufacturers who wish to provide this information voluntarily could do so if they believed that communicating the percent of meat in the product provided them an advantage.
- Percent ingredient labeling, including a requirement for meat or poultry percent ingredient labeling, is not in keeping with historical U.S. government policy regarding standards that suggest percentage ingredient labeling of foods in international trade. For a number of years, the U.S. delegation to the Codex Committee on Food Labeling opposed a European Union (EU) proposal to require labeling of percent fish core in fish sticks. Importantly, unlike frozen pizza, fish sticks do have one characterizing ingredient.

One commenter, a representative of a consumer advocacy organization, stated that requiring that the product names of non-standardized pizzas include the percent of meat or poultry in the product, although well intentioned, seems clumsy and extreme. A better solution, suggested the commenter, is to identify the percent of meat or poultry in a product somewhere outside the ingredients statement, but not as part of the product name.

Another commenter, a trade association representing meat processors, noted that if the meat and sausage pizza standards are rescinded, it is important that FSIS give consideration to alternative ways to provide truthful information about the meat or sausage component of products identified as ''pizza.''

Response: The Agency was not persuaded by the comments that opposed percent labeling of the meat or poultry content of non-standardized pizzas because many of these comments are misleading or inaccurate. Requiring percent labeling of the meat or poultry content for packaged pizzas will not re-establish different regulatory requirements for retail and frozen pizza industries, as suggested by the comments. Even with the elimination of the pizza standards, restaurant pizzas and packaged pizzas will still be subject to different regulatory requirements. For example, nutrition labeling is required for packaged pizzas but not for restaurant pizzas.

The statement that percent labeling of a specific ingredient is not required for any other products regulated by FSIS and FDA also is not accurate. FDA regulations require that the common or usual name of a food contain the percentage of any characterizing ingredients when the proportion of such ingredients in the food has a material bearing on price or consumer acceptance, or when the labeling or appearance of the food may create the erroneous impression that the ingredient is present in an amount greater than is actually the case (21 CFR 102.5(b)). Thus, contrary to what was suggested in the comments, requiring percent labeling of the meat or poultry component of a meat or poultry pizza with a common or usual name is consistent with FDA regulations.

Although it is true that the meat content of pizza is readily apparent when examining the pizza itself, the meat content is not readily apparent if there is a solid cover on the package. Furthermore, FSIS disagrees that percent meat content labeling promotes unproductive labeling contests. The Agency believes that it could promote consumer choice and fair competition.

Upon further consideration of the issue, FSIS has determined that required labeling features, such as the nutrition facts panel and ingredients statement, do not provide sufficient information about the meat or poultry content of products identified as ''pizza.'' Although ingredients must be listed in order of predominance, there could be such a wide range of ingredients in a pizza that such a listing does not

effectively convey the proportion of meat or poultry in the product. FSIS agrees with the comment that, once the standards are rescinded, the Agency should consider alternative ways to provide truthful information about the meat or poultry content of products identified as ''pizza.'' It also agrees that the percent of meat or poultry in products identified as ''pizza'' need not appear as part of the product name and can be conveyed somewhere else on the product label.

Therefore, FSIS has decided to require, for three years from the effective date of this final rule, that products that are identified as ''pizza'' and whose common or usual name identify a meat or poultry component state the percent of meat or poultry in the product in a parenthetical statement contiguous to the ingredients statement. If consumers find this information useful, and believe that it should appear on the product labeling permanently, they may petition the Agency to rescind the expiration date of this part of the regulation.

Comment: Most of the commenters who opposed eliminating the meat and sausage pizza standards did so because, as previously mentioned, without the standards a product identified as a ''meat pizza'' or a ''sausage pizza'' would be permitted to contain as little as 2 percent cooked or 3 percent raw meat instead of the 12 percent cooked or 15 percent raw meat prescribed by the standards. These commenters noted that meat is the most expensive ingredient in a meat pizza, and that without standards, manufacturers would be able to significantly reduce the meat content of meat pizzas without consumers' knowledge. They also asserted that descriptors of meat or sausage imply that a product contains some minimum amount of these ingredients, and that consumers' expectations are that this amount is greater than two percent. Thus, the commenters argued, removing the meat and sausage pizza standards would lead to economic deception of consumers that purchase non-standardized pizzas.

Response: As discussed above, FSIS believes that these comments demonstrate that some consumers rely on the pizza standards of identity to ensure that a product identified as a meat or poultry pizza contains a certain amount of meat. However, the Agency does not believe that retaining the regulatory pizza standards of identity is necessary to address the concerns expressed by these comments. As discussed above, to address concerns that consumers could be misled about the meat content of non-standardized pizzas, the Agency is requiring temporary supplemental labeling of the meat or poultry content for products that are identified as ''pizzas'' and whose product name includes a meat or poultry component.

Furthermore, FSIS does not agree that rescinding the meat and sausage pizza standards will lead to economic deception of consumers that purchase non-standardized pizzas. FSIS has determined that over the years consumer expectations, industry creativity, and technological innovation have created new types of pizza products that fall outside the realm of the traditional or standardized pizza of several decades ago. The existing pizza standards inhibit the production and marketing by Federal establishments of new pizza products. Examples of new pizza products found at retail and food service establishments include: ''deep dish pizzas'' that provide a smaller surface area for toppings, ''white pizzas'' that do not have a traditional tomato-based sauce, and ethnic-oriented pizzas that often reduce the meat component to permit a greater amount of vegetable toppings. The current standards for meat and sausage pizzas require that the products contain tomato sauce, cheese, and a bread-based crust, in addition to a minimum percentage of meat or poultry. Thus, the current standards impede the development and marketing of these new and innovative products.

Comment: Many commenters that opposed the proposed rule stated that eliminating the meat and sausage pizza standards of identity is not necessary for companies to produce pizzas with nutritional profiles more consistent with nutritional guidance (*e.g.*, lower in fat). They stated that nutritionally improved products can and should be achieved by using lower fat ingredients, not less of fat-containing ingredients, such as meat and cheese. One commenter, an individual consumer, stated that even if the pizza standards were eliminated, it would not likely result in more lower-fat frozen meat or sausage pizzas. To support his argument, the commenter noted that of all the restaurant menus that NFPI presented in support of its petition, not one contained a meat or sausage pizza advertised as being a healthier or lower fat product.

Supporters of the proposal felt that the current standards are obstructing producers' ability to create meat pizzas lower in fat, saturated fat, and cholesterol in response to changing consumer tastes. They stated that eliminating the standards will give manufacturers the flexibility to offer pizzas with less meat, sausage, and fat, and will permit the production of frozen pizzas with reduced-fat cheese or no cheese, provided there is disclosure on the product's label. One commenter noted that it is not always economical to use leaner meats, which are more expensive on a per pound basis, when a manufacturer has to comply with a percentage minimum weight.

Response: FSIS does not disagree that once this final rule is effective, many pizza manufacturers will continue to market the traditional pizza products that are available to consumers today. However, these manufacturers will also have greater flexibility to produce meat and poultry pizzas with reductions in constituents that are of health concern to some people, such as calories and fat. While it is true, as noted in some of the comments, that the standards permit the production of pizzas with improved nutritional profiles through the use of lower fat ingredients, removing the standards will give pizza manufacturers additional flexibility to produce and market nutritionally improved packaged pizzas.

Removal of the pizza standards will not only permit greater use of lower fat ingredients in meat pizza products, such as vegetables and soy-based and other reduced-fat cheeses, it will also permit reductions in the amount of fat-containing ingredients, such as meat and cheese, which will result in a wider selection of pizza products that meet nutrient content claims such as ''lower fat,'' ''healthy,'' and ''lean.'' As noted by one commenter, using leaner meats to reduce the fat content of a pizza product that must comply with a minimum meat content is not always economical because leaner meats are more expensive on a per pound basis. Thus, eliminating the standard will permit pizza manufacturers to provide packaged pizza products with improved nutritional profiles at a variety of pricing levels.

Comments: Some of the commenters that opposed eliminating the pizza standards asserted that changes in standards should be based on consumer research. They pointed out that, while NFPI presented restaurant menu data to support its petition, it did not provide research to indicate that consumers liked the new styles of pizzas presented on the menus. One commenter noted that neither FSIS nor the petitioner presented strong evidence of consumer confusion or dissatisfaction with the current standards.

A few commenters presented their own consumer research that they contended provides evidence that consumers are satisfied with the pizza standards. Two commenters, trade

associations representing livestock producers, submitted a consumer research report from a consumer focus group study on the meaning of food names and the assumptions underlying them. The report concluded, among other things, that the identities of certain foods, such as bologna and beef stew, are so distinct to consumers, and consumers are so used to the products being labeled as such, that consumers have difficulty grasping the concept of a simulated change to the names or composition of the product. The research report also concluded that changing the composition of a commonly named food product is equivalent to changing the meaning of the name itself. These findings, the commenters asserted, are evidence that consumers rely on product standards to ensure product integrity and prevent economic adulteration.

Another commenter, a manufacturer and distributor of frozen prepared food products that supported removal of the portion of the pizza standards that prescribes the four basic components (meat, cheese, tomato sauce and bread based crust) but opposed elimination of the minimum meat content requirement, submitted a consumer survey that questioned consumers about the meat content of specific meat pizza products produced by the commenter's company. A majority of the consumers surveyed felt that the meat content of each product involved in the survey was ''just about right.'' The commenter stated that these results indicate that consumers are satisfied with the meat content requirements imposed by the current standards and that the standards still ''promote honesty and fair dealing in the interest of the consumer.''

Another commenter, a multinational manufacturer and marketer of consumer branded meat and food products, submitted the results of a survey conducted after publication of the proposed rule in which the company contacted over 1,000 consumers by telephone. The survey asked consumers how they felt about the U.S. Government's proposal ''to change the minimum amount of meat for frozen meat pizza to two percent of the cooked weight or three percent of the raw weight.'' The commenter's survey found that consumers' were overwhelmingly against the proposed change.

Response: The restaurant menu data submitted by NFPI in support of its petition demonstrate that many products identified as ''pizza'' that are purchased by consumers in restaurants do not meet the Agency's standards. Thus, even without consumer survey data, it is no longer reasonable to assume that consumer expectations with regard to what constitutes a pizza mirror the standards for FSIS-inspected products. Restaurants would not be offering such a variety of pizza products if consumers were not interested in purchasing such products.

Although FSIS does not dispute the findings of the consumer studies submitted by the commenters, the Agency disagrees that these findings demonstrate a need to retain the meat and sausage pizza standards of identity. The consumer focus group study that examined the meaning of common names for meat products submitted by the two trade associations questioned consumers about their expectations regarding the composition of a variety of products that have regulatory standards of identity, including bacon and bologna. However, it did not question consumers about their expectations regarding the composition of products identified as ''pizza.''

The data submitted by NFPI in support of its petition indicate that, unlike consumer perceptions of products that were the subject of the consumer focus group studies, such as bacon or bologna, consumer perceptions of what a product identified as a ''pizza'' is have changed dramatically in recent years to include a wide variety of non-traditional, non-standard versions of pizzas. Thus, it is unlikely that changing the composition of a product identified as a ''pizza'' will result in consumer confusion as to the characteristics of the product. FSIS does not completely disagree with the commenters' conclusion that the study results support the notion that consumers rely on product standards to ensure product integrity and prevent economic adulteration. However, when a product standard no longer reflects consumer expectations about the composition of the product, the standard is not serving its purpose and should be rescinded.

The survey conducted by the frozen foods manufacturer that found that a majority of the consumers surveyed felt that the meat content of a variety of meat pizza products was ''just about right,'' and the survey conducted by the multinational manufacturer of meat products that asked consumers how they felt about the U.S. Government's proposal ''to change the minimum amount of meat for frozen meat pizza to two percent of the cooked weight or three percent of the raw weight,'' both imply that the sole effect of eliminating the pizza standards would be a reduction in the minimum meat content and that once the standards are rescinded every pizza manufacturer will reduce the meat content of frozen pizzas to 2 percent cooked or 3 percent raw meat.

Rescinding the pizza standards involves more that permitting a reduction in the minimum meat content requirement for meat food products identified as ''pizza.'' It also involves permitting the use of sauces other than tomato-based sauces, crusts other than bread-based crusts, and components other than standardized cheese and cheese food products in federally inspected pizzas. Thus, in addition to permitting a reduction in the meat content of a meat or sausage pizza, eliminating the pizza standards provides the opportunity for the development and marketing of non-traditional pizza products, such as pizza with no sauce or cheese component. None of the consumer research studies submitted by the commenters questioned consumers on how they felt about this aspect of eliminating the pizza standards.

Furthermore, the fact that consumers state that they are satisfied with the meat content of certain products does not necessarily mean that that meat content must be prescribed by regulation. As discussed above, to allow consumer to become familiar with the variations that will be permitted in the meat content of non-standardized pizzas, the Agency is requiring that products identified as ''pizza'' that include a meat or poultry component as part of the product name bear temporary supplemental labeling that conveys the percent of meat or poultry in the products. Furthermore, in the absence of a prescribed meat content requirement, companies are likely to continue to manufacture pizzas with an amount of meat that consumers desire because if they do not they will lose their market share to companies that do.

As demonstrated by the studies discussed above, consumer research can be greatly affected by the manner in which questions are posed to consumers. Thus, the results of the consumer surveys submitted in response to the proposed rule have not persuaded FSIS to retain the pizza standards of identity.

Comment: One commenter stated that policy interpretations on the regulations made by FSIS over the years provide frozen pizza manufacturers with sufficient flexibility to produce and market ''non-traditional'' meat pizzas, and therefore, there is no need to eliminate the pizza standards. The commenter cited FSIS's interpretive policies related to the pizza standards, including the policy that permits certain products to be identified as ''white

pizza,'' the policy that defines ''tomato sauce'' as any sauce that contains two percent tomatoes, the policy that liberally interprets ''bread-based crust'' to include most every kind of flour-based component, and the policy that allows for percentage meat labeling on pizza products that do not otherwise comply with the minimum meat content prescribed by the standards.

Response: In addition to allowing pizza manufacturers to produce the ''non-traditional'' products that are currently described in FSIS policy documents, rescinding the standards of identity for meat and sausage pizza will provide pizza manufacturers with the flexibility to create new and novel styles of pizza products without having to approach FSIS for new policy interpretations or regulatory changes.

Comment: Several commenters requested that FSIS clarify whether it will permit generic label approval for meat and poultry pizza products once the pizza standards are rescinded.

Response: Modifications made to incorporate the percent meat or poultry content declaration prescribed by this final rule into the labels of existing meat or poultry pizza products will be generically approved pursuant to 9 CFR 317.5(b)(1) and 9 CFR 381.133(b)(1). These provisions of the FSIS regulations allow generic approval of the labeling for products that have product standards as specified in the meat and poultry inspection regulations or in the FSIS Standards and Labeling Policy Book (the Policy Book). In addition to those products produced in accordance with the regulatory pizza standards in 9 CFR 319.600, many of the meat and poultry pizza products on the market today qualify for generic label approval because they are produced under informal standards described in the Policy Book.

Although meat and poultry pizza products will not be subject to prescribed product standards once this final rule becomes effective, for labeling approval purposes, FSIS will consider existing meat or poultry pizza products whose labels were generically approved prior to the effective date of this final rule as products that qualify for generic label approval under 9 CFR 317.5(b)(1) and 9 CFR 381.133(b)(1).

New meat and poultry pizza products that are developed and marketed after the effective date of this final rule will not qualify for generic label approval under 9 CFR 317.5(b)(1) and 9 CFR 381.133(b)(1) because these products are not subject to a product standard. Thus, unless they qualify for generic label approval under a provision other than 9 CFR 317.5(b)(1) or 9 CFR 381.133(b)(1), the labels of such products must be submitted for formal approval from FSIS.

Once the labels of non-standardized pizza products have been approved as sketch labeling, certain modifications made to the final labeling may be generically approved pursuant to 9 CFR 317.5(b)(9) and 381.133(b)(9). For example, under 9 CFR 317.5(b)(9)(vii) and 9 CFR 381.133(b)(9)(vii), changes made to the percent meat or poultry declaration statement may qualify for generic approval if the modification reflects a change in the quantity of the meat or poultry ingredient shown in the formula without a change in the order of predominance shown on the label. Also, once the three-year effective date for the meat or poultry content labeling requirement has expired, the meat or poultry content declaration will become a non-mandatory feature. Deletions of non-mandatory features qualify for generic labeling approval under 9 CFR 317.5(b)(9)(xxiii) and 9 CFR 381.133(b)(9)(xxiii).

Comment: Several commenters requested that, in conjunction with this rulemaking, FSIS modify the policies contained in the Food Standards and Labeling Policy book and in the FSIS Policy Memoranda that are associated with the regulatory pizza standards of identity. Most of the requested modifications were to eliminate the references to 9 CFR 319.600 in these policies.

Response: Most of the FSIS policies for products identified as ''pizza'' require that these products comply with the minimum meat content requirement prescribed by 9 CFR 319.600. Once this final rule becomes effective, products with standards specified in the Policy Book will no longer be subject to this requirement. However, like all products identified as ''pizza'' with a meat or poultry component as part of the product name, the labels of pizza products that had been subject to standards specified in the Policy Book will be required to bear a statement contiguous to the ingredients statement that conveys the percent of meat of poultry in the product.

Comment: Several commenters requested that, in the preamble to the final rule, FSIS provide clarification as to what it considers to be appropriate descriptive names for non-standardized pizza products. These commenters agreed with the Agency's statements in the preamble to the proposed rule that products with the four ''traditional'' pizza ingredients should be identified by the term ''pizza'' with a designation of the meat component (*e.g.* ''pizza with sausage''). These commenters also agreed that the labeling of products that vary in terms of the four traditional components should bear a descriptive qualifier following ''pizza'' that specifies the principal components (*e.g.*, ''pizza with sausage and pesto sauce''). However, the commenters believed that the descriptive qualifier for products with ''non-traditional'' components should not list the ingredients in order of predominance but in the order that best characterizes the non-traditional product. These commenters also suggested that a description of the crust not be required to be included in the descriptive qualifier unless the crust is different from the traditional dough-based crust.

Response: An appropriate descriptive name for a non-standardized pizza product that contains components that differ from those stipulated in the regulatory standard prescribed by 9 CFR 319.600 (*i.e.*, tomato sauce, cheese, and meat topping on a bread-based crust) would be a listing of the components used at levels that characterize the product. Historically, the Agency has considered food and ingredient components used at levels above two percent of product formulation to be ''characterizing.'' While all characterizing components must be listed in the descriptive product name, they need not be listed in order of predominance. As suggested by the commenter, they may be listed in an order that best characterizes the non-traditional product. The descriptive name should list all characterizing components of the non-standardized pizza product, including crust even if the crust is a traditional dough-based crust. This is consistent with descriptive labeling requirements for other non-standardized products such as stuffed sandwiches or meat fillings wrapped in dough.

Comment: One commenter felt that the examples of acceptable descriptive names for products that do not comply with the traditional standards but that purport to be pizzas provided by FSIS in the preamble to the proposed rule are unwieldy, cumbersome, and in direct contradiction to the goals of the proposed rule. The commenter stated that listing names of ingredients in the name of the pizza, as suggested by the Agency, duplicates the information listed in the ingredients statement.

Response: The examples of descriptive names for non-standardized pizzas provided by FSIS in the preamble to the proposed rule list all characterizing components of the non-standardized pizza product. This is consistent with descriptive labeling

requirements for other non-standardized meat and poultry products.

Comment: One commenter suggested that rather than rescind the pizza standards, FSIS should decline jurisdiction over pizzas made with processed meat products. The commenter felt that inspection of these products is a waste of resources that could be better directed to overseeing the slaughter of animals and preparation of raw meat products. The commenter stated that legally FSIS could declare that food products that contain less than 50 percent cooked meat are not considered ''meat food products'' and therefore, are not subject to FSIS jurisdiction.

Response: Under section 1(j) of the FMIA, the Secretary of Agriculture, and FSIS by delegation, may exempt from the definition of ''meat food products'' those products that contain meat only in relatively small proportions or that have not been considered by consumers as products of the meat food industry (21 U.S.C. 601(j)). FSIS does not believe that products that consist of up to 49 percent cooked meat contain meat in relatively small proportions as contemplated by the FMIA. Furthermore, FSIS is not aware of any evidence to indicate that consumers do not consider meat pizzas as products of the meat food industry. Therefore, FSIS disagrees that it should decline jurisdiction over meat pizzas and other products that contain less than 50 percent cooked meat.

Comment: One commenter suggested that in addition to eliminating the pizza standards, FSIS should examine the wisdom of its remaining regulatory standards. Another commenter stated that standards reform should not be delayed. This commenter felt that continued adherence to the standards by FSIS impedes product innovation to the detriment of consumers and food industry alike. Another commenter stated that rather than eliminating regulatory standards of identity for meat and poultry products, FSIS should implement them in a more harmonious way. The commenter stated that the regulatory standards governing the amount of poultry in processed food products that contain poultry are substantially different from those governing the meat content of similar processed products that contain meat.

Response: FSIS and FDA are jointly developing a proposed rule whose goal is to establish ''general principles'' that outside parties can apply in requesting changes to food standards. The proposed rule, ''Food Standards; General Principles and Standards Modernization'' (the ''General Principles'' proposal) will address all Federal food standards of identity, whether under FSIS jurisdiction or that of the FDA. Following the conclusion of this rulemaking, parties interested in pursuing changes to the regulatory standards of identity may petition the Agency to initiate rulemaking to make the requested changes.

Comment: One commenter noted that in the preamble to the proposed rule, FSIS stated that consumers'' understand the term ''pizza'' to mean ''an open-faced crust with one or more of a variety of ingredients'' (66 FR 55601). The commenter noted that it produces pizza stuffed sandwiches that are required to comply with the pizza standards and requested that FSIS recognize that the term ''pizza'' is not limited to products with open-faced crusts.

Response: Products such as ''pizza rolls'' or ''pizza pockets'' are non-standardized products that must be identified by descriptive names. Those products that were required to comply with the minimum meat content prescribed by the standards will no longer be required to do so once the standards are eliminated. However, any product identified as ''pizza'' product that lists a meat or poultry component as part of the product name, including a product identified as a ''meat pizza roll,'' must comply with the meat or poultry content labeling requirement prescribed by this final rule.

Comment: One commenter stated that in the proposed rule's analysis under the Regulatory Flexibility Act, FSIS failed to discuss the impact that elimination of the pizza standards will have on small businesses that make meat toppings for pizzas.

Response: The four companies that supply most of the meat toppings, such as pepperoni, sausage, and chopped meat, to both major and contract pizza manufacturers are large businesses. There are some small regional companies that supply meat toppings to regional manufacturers. However, this final rule is not likely to have a significant economic impact on these small businesses. Once the standards are rescinded, FSIS has no information to indicate that in the absence of the minimum meat content requirement prescribed by the standards companies will significantly reduce the amount of meat or poultry in products identified as ''pizza''. As discussed above, companies are likely to continue to manufacture pizzas with an amount of meat that consumers desire because if they do not they will lose their market share to companies that do. Therefore, FSIS does not believe that this final rule will have an adverse impact on the small businesses that supply meat toppings for packaged pizza products.

The Final Rule

As proposed, FSIS is rescinding the regulatory standards of identity for pizza by removing 9 CFR 319.600 from the federal meat inspection regulations. In addition, the Agency is amending 9 CFR 317.8 and 9 CFR 381.129 by adding new paragraphs (b)(40) and (f), respectively, to require that the labeling of meat or poultry products identified as ''pizza'' that contain a meat or poultry component as part of the product name convey the percent of the meat or poultry in the product in a parenthetical statement contiguous to the ingredients statement. The percentage of meat or poultry in the product must be calculated on the weight of the cooked, dried, or cured meat or poultry in the product (as opposed to the weight of the raw meat or poultry) in relation to all components of the product. This labeling requirement will expire three years after the effective date of this rule. Pizza manufacturers are permitted to exhaust their remaining packaging inventory before they will be required to comply with the new labeling requirement.

Executive Order 12866 and Unfunded Mandates Reform Act

I. Executive Order 12866: Cost-benefit Analysis

This action has been reviewed for compliance with Executive Order (EO) 12866. EO 12866 directs agencies to assess all costs and benefits of available regulatory alternatives and, when a regulation is necessary, to select the regulatory approach that maximizes net benefits (including potential economic, environmental, public health and safety, and other advantages, distributive impacts, and equity). We have determined that this final rule maximizes net benefits to consumers by removing the standard of identity for ''pizza with meat'' and ''pizza with sausage.''

EO 12866 classifies a rule as significant if it meets any one of a number of specified conditions, including: having an annual effect on the economy of $100 million, adversely affecting a sector of the economy in a material way, adversely affecting competition, or adversely affecting jobs. A regulation is also considered a significant regulatory action if it raises novel legal or policy issues. This final rule has been designated as non-significant as defined by EO 12866 and therefore has not been reviewed by the Office of Management and Budget.

II. Unfunded Mandates Reform Act

The Unfunded Mandates Reform Act of 1995 (Public Law 104–4), requiring cost-benefit and other analyses, in section 1531 (a) defines a significant rule as ''a Federal mandate that may result in the expenditure by State, local, and tribal governments in the aggregate, or by the private sector, of $100,000,000 (adjusted annually for inflation) in any 1 year.'' This final rule is not a significant rule under the Unfunded Mandates Reform Act.

III. Industry Profile

The meat and poultry pizza industry affected by this final rule consists of manufacturers who produce refrigerated pizzas, frozen pizzas, pizza kits, and mixes. Because frozen pizzas are the dominant products of this industry, making up 99 percent of the affected market, FSIS is focusing on this segment of the industry in this analysis.

It is estimated that there are about 155 manufacturers of frozen pizzas [1] (manufacturers of both brand and private label frozen pizzas) and these consist of 6 major manufacturers, 20 private-label manufacturers, and approximately one hundred twenty nine regional contract manufacturers.[2] The major manufacturers produce brand-named frozen pizzas on a national basis and the contract manufacturers produce brand-named frozen pizzas on a regional basis. Some restaurants make pizzas, freeze them, and then sell them to the local grocery stores on a contractual basis. Finally, there are several companies, like chain supermarkets, warehouse clubs, restaurants, and franchises, that contract out the production of frozen meat pizzas to approximately 20 private label manufacturers and regional contract manufacturers.

Four major suppliers to pizza manufacturers supply meat toppings, such as pepperoni, sausage, and chopped meat, to both major and contract pizza manufacturers. There are also some small regional companies that supply meat toppings to regional manufacturers. FSIS has determined that the suppliers of meat pizza toppings will most likely not be adversely affected by the final rule because even though pizza manufacturers may reduce the amount of meat toppings on pizzas, these suppliers can still supply other markets with their meat toppings, *e.g.* deli, frozen dinners, etc. In addition, these suppliers offer several product lines of pizza toppings other than meat, and they may experience an increase in demand for these other toppings. The agency believes, however, that as a direct result of the final rule, the overall demand for frozen pizzas will increase, and therefore the total demand for pizzas with meat toppings will also increase.

IV. Benefits

The final rule removes the standard of identity for meat and sausage pizza and requires that for a 3-year period, the labeling of products identified as pizza that lists a meat or poultry component as part of the product name will bear a statement that conveys the percent of meat or poultry in the product. The percentage statement must appear contiguous to the ingredients statement.

The following sections contain qualitative descriptions of consumer and manufacturer benefits that will ensue from eliminating the meat and sausage pizza standards of identity.

A. Consumer Benefits

The final rule will allow consumers to choose from a greater variety of meat and poultry pizzas, some of which may have improved nutritional profiles. Consumers will have a greater opportunity to improve their diets, should they desire to do so, because manufacturers will now be able to market meat and poultry pizzas that contain less meat or poultry and may contain non-meat toppings such as soy-based toppings,[3] and other innovative toppings that contain a lesser amount of meat than the amount of meat (12% cooked or 15% raw) that they are currently required to contain.

Consumers may also benefit because they may be able to purchase less costly meat and poultry pizzas. In addition, some consumers may be willing to pay more for some pizzas if they perceive that these meat and poultry pizzas are healthier than other pizzas. In either case, consumers will benefit because both the low and high end of the market can be expanded.

Under the final rule, consumers will also be protected from any misrepresentations of the amount of meat or poultry contained in pizzas. Percentage labeling of meat and poultry in pizzas, which is required for the next three years, will benefit those consumers who have come to expect a certain amount of meat or poultry on pizzas (*i.e.*, consumers who rely on standards) by allowing them to become familiar with and accustomed to a variation in meat or poultry amount on pizzas. Percentage labeling will also help reduce any confusion consumers may experience when they are comparing the amounts of meat or poultry in pizzas. During the 3-year period, consumers will be able to reduce their search costs when comparing pizzas because when selecting meat or poultry pizzas, they will be able to readily ascertain the amount of meat or poultry in different products. Consumers will be able to make choices consistent with their desire to have more or less meat or poultry on pizzas, and the percentage labeling will help them make accurate selections.

Finally, consumers, who live in areas where there are very few restaurants, or in areas where the restaurants do not sell pizzas, or in areas where pizza delivery is limited, will benefit because they will have access to a greater variety of non-traditional pizzas in their local supermarkets.

B. Manufacturer Benefits

Manufacturers of pizzas containing meat or poultry will benefit from the final rule because the elimination of the traditional FSIS pizza standards of identity will make them more competitive with non-meat and non-poultry containing pizza producers and retail outlets. Currently, manufacturers of FDA-regulated pizzas and pizzas sold by restaurants and carry out/delivery services, whether frozen or fresh, are able to experiment with innovative recipes and ingredient profiles, in offering consumers new products. These innovative pizzas that are sold in retail stores need not contain cheese or tomato sauce, as FSIS requires.

Manufacturers of non-traditional pizzas will potentially experience an increase in sales and therefore revenues, when they achieve economies of scale while producing a large variety of these pizzas. Since the manufacturers will not be restricted to manufacturing a prescribed recipe pizza, they can become more innovative and create new markets by offering new products and mass producing them. Also, these manufacturers can use less costly ingredients and eliminate or reduce certain ingredients, thereby offering more economically priced meat and poultry pizzas. For some manufacturers, this may increase their market share and revenues.

[1] Final rule affects all meat and poultry pizzas produced in federally inspected establishments.

[2] The exact number of regional contract manufacturers is unknown.

[3] One large manufacturer has begun producing Smart Pizza for the school lunch program. Smart Pizza is the first of its kind to utilize soy protein. By utilizing soy in the pizzas, sodium is reduced by up to 22 percent and total fat is lowered by as much as 35 percent.

V. Costs

A. Pre-printed Package Labels

This final rule does not mandate changes in the way meat or poultry products are produced. However, it does impose a new labeling requirement, for a limited time, on firms that manufacture and market products identified as pizzas that list meat or poultry components as part of the product name. When this rule becomes effective, all companies that produce products identified as pizzas that list a meat or poultry component as part of the product name will be required to modify their product labels by adding a statement contiguous to the ingredients statement that states the percent of meat or poultry in the product. Companies must consequently redesign their product labels by adding the required information to their existing label designs, or by applying a separate sticker with the required information to their existing labels. FSIS will permit companies to use their remaining packaging inventory before they will be required to comply with the new labeling requirement so that they will not have to discard any unused packaging.

Manufacturing of pre-printed packaging is generally contracted out to third-party firms. Costs to redesign product labels or add information to existing label designs are one-time costs and include costs associated with internal administrative activities, assessing the meat or poultry amounts, altering the graphic design, conducting prepress activities, and changing engraving plates or cylinders.[4]

1. One-Time Costs

FDA's Labeling Cost Model was originally developed by researchers at RTI International for various consumer food products and was adapted for egg products, which are primarily shipped to foodservice and further food manufacturers. RTI adapted the model to determine the cost of the new regulation of placing the statements ''keep refrigerated'' or ''keep frozen'' on all egg products that require special handling to maintain their wholesome condition. Additionally such statements had to be printed on the principal display panel of the product. In determining the cost of the proposed egg products rule, the model was used to determine the cost of placing refrigeration labels, the cost of the labels, and the cost of the labeling equipment needed and the average size of the containers requiring the labels. FSIS believes that this is a reasonable and valid model to use to estimate the cost of the final rule for changing the labels on frozen meat and poultry pizzas.

Using the FDA Labeling Cost Model, the following table provides the costs associated with changing labeling information for frozen and refrigerated pizzas packaging using the offset lithography printing method[5] for each universal product code (UPC) that needs to be changed. A UPC is a unique code assigned to every consumer package good and is read by a scanner when purchased.[6]

TABLE 1.—ONE-TIME COSTS TO CHANGE LABELS FOR FROZEN AND REFRIGERATED PIZZAS, KITS, AND MIXES USING OFF-SET LITHOGRAPHY PRINTING METHOD

Cost Type	Per UPC Costs		
	Low	Medium	High
Administrative	$132	$308	$484
Graphic Design	330	495	660
Total	462	803	1,144

Source: FDA Labeling Cost Model (Muth, Gledhill, and Karns, 2001).
[1] Estimated for 2001.

It is estimated that the cost per UPC will range from a low of $462 to a high of $1,144, with the more likely cost being $803[7] as depicted in the above table.

In 2001, there were 1,603 UPC's associated with refrigerated and frozen pizzas including a small percentage of pizza kits and mixes, of which 1,042 were from brand name labels and 561 were from private labels. When all these costs are considered, the estimated one-time cost to modify pre-printed pizza packaging labels for 1,603 UPC, as shown in the table below is $741 thousand ($462 × 1,603 UPCs) to $1.8 million ($1,144 × 1,603 UPC),[8] with the more likely cost being $1.3 million ($803 × 1,603 UPCs).

TABLE 2.—ONE-TIME COSTS, FROZEN AND REFRIGERATED PIZZAS, KITS, AND MIXES FOR ESTIMATED 1,603 UPC CHANGES [1]

Cost Type	For Estimated 1,603 UPC Changes		
	Low	Medium	High
Administrative	$211,636	$493,636	$775,997
Graphic Design	529,089	793,634	1,058,178
Total	740,725	1,287,270	1,834,175

Source: FDA Labeling Cost Model (Muth, Gledhill, and Karns, 2001).
[1] Estimated for 2001

[4] In this analysis, there will be no costs associated with assessing the meat or poultry contents of pizzas because companies will be producing meat and poultry pizzas based on a formula. The final rule requires companies to calculate the weight of the meat or poultry toppings in relation to all components of the pizzas, which FSIS believes will result in no new incremental costs. There will not be any prepress activities and changing the engraving plates costs because these costs will be incurred during their normal business cycle.

[5] The FDA Labeling Cost Model assumes that either the offset lithography or flexography printing method will be used. In this analysis the offset lithography printing method is assumed to be used because of its relative advantages in quality, simplicity, and cost. The complexity of the label change determines the level of effort for artwork, stripping or image assembly, and engraving. It also determines the number of plates or cylinders that must be modified or replaced. Typically, when companies use offset lithography printing, many companies engrave new lettering onto an existing printing plate to save time and resources. Other companies, however, order new printing plates regardless of how minor the line copy change may be.

[6] UPC is a 10 digit code where the first five digits are assigned to the vendor and the last 5 digits are specific to the item.

[7] For each component of cost in this model, RTI obtained a range of estimates for each printing method. The lowest of these estimates is considered the limit of the low range, and the highest of the estimates is considered the limit of the high range. The low and high range of total cost is calculated by adding together all of the low and high range estimates of each component cost, so the low and high range estimates of this model are unlikely.

[8] Source: Muth, M.K., E.C. Gledhill, and S.A. Karns. 2001. ''FDA Labeling Cost Model.'' Prepared for the U.S. Department of Health and Human Services. Research Triangle Park, NC: RTI.

2. Annual Costs

a. *Administrative.*

The total cost of administrative activities is the dollar value of the incremental effort expended in order to comply with the final rule. Administrative costs consist of activities such as interpreting the rule in relation to the firm's products, determining the scope and coverage related to product labels, establishing a corporate position, formulating a method for compliance, and managing the compliance method.

TABLE 3.—TOTAL ANNUAL COSTS OF FROZEN, REFRIGERATED PIZZAS, KITS, AND MIXES [1]

Year	Cost level	Admin cost	Graphic design cost	Total cost	Disc factor 7%	Total disc cost
1	Low	$211,636	$529,089	$740,725	0.93	$688,874
	Medium	493,816	793,634	1,287,450		1,197,329
	High	775,997	1,058,178	1,834,175		1,705,783

[1] Costs are over a three year period, even though the industry does not incur costs during the second and third year.

FSIS estimates that the administrative costs over the three-year period of compliance for the industry will range between $212 thousand and $776 thousand, ($197 thousand and $722 thousand, discounted at the 7% rate) [9] as depicted in Table 3, with the mid-point being at $494 thousand and the per company cost being $3,186 at the mid-point ($493,816/155 firms). These administrative costs of changing labels for pre-printed packages will only be incurred in the first year of the rule.

b. Graphic Design

The graphic design costs are being counted as a direct cost of the final rule, range from $529 thousand to $1.1 million, with the mid-point being at $794 thousand, as depicted in Table 3, and the per company cost is $5,120 at the mid-point ($793, 634/155 firms). The cost depends upon the type of printing processes used, the complexity of the label change, and the length of the compliance period. The graphic design costs will be incurred in the first year only, and no additional costs are expected because companies will need to print labels regardless of whether this rule is promulgated.

c. Stickers

Companies will also have the option of supplying the required information by applying a separate sticker to existing product labels. It should be noted that the meat and poultry pizza manufacturers of brand-name and private-label pizzas who regularly use stickers to convey product information already incur these costs. Thus, these costs are not expected to be a direct effect of the final rule for all meat and poultry pizza manufacturers. Table 4 depicts the costs of changing and applying stickers to pizza packages for 2,068 UPC,[10] ranging from a low of $6.9 million to a high of $18 million, with the mid-point being at $12.6 million.

TABLE 4.—TOTAL INDUSTRY COSTS ASSOCIATED WITH USING INDIVIDUAL STICKERS TO MODIFY PRODUCT LABELING[1]

Cost type	Low	Medium	High
Administrative	$273,009	$637,021	$1,001,033
Graphic Design	$682,523	$1,023,784	$1,365,045
Stickers	$5,926,137	$10,981,288	$15,654,141
Total	$6,881,669	$12,642,093	$18,020,219

Source: FDA Labeling Cost Model (Muth, Gledhill, and Karns, 2001).
[1] Estimated for 2001.

The use of pre-printed stickers to modify the product labels also has recurring labor costs, assuming that the stickers are manually applied. Estimated sticker application costs range from $0.014 to $0.034 per package[11], which is included in the cost for stickers given in Table 4, ranging from $6 million to $16 million, with the mid-point being $11 million. Stickers' application costs comprised 87 percent of the total costs for stickers.

In most cases, FSIS believes that it will not be practical for meat and poultry pizza manufacturers to use these stickers to incorporate the required information on the product label because they are small and difficult to apply. Moreover, FSIS believes that the cost of using stickers for longer than six month is unrealistic because the costs associated with stickers are expected to be higher than the alternative of printing packages. For example, the FDA Labeling Cost Model shows that the total cost of applying stickers to frozen and refrigerated pizzas as depicted in the Table 5 below is over 8 times higher than the costs of changing the labels on packages. The total costs depicted for printing stickers in the table include both labor and the one-time redesign cost.

[9] The discount factor of 7 percent is used to calculate the present worth of a future value at the end of a 3 year period.

[10] The number of UPCs increased from 1,603 for pre-printed packages to 2,068 for stickers because the FDA Labeling Cost Model assumes that the companies which use stickers will have six months to comply. In those six months, the companies will print the stickers until they are set up to print their packages. Therefore the number of UPCs will increase.

[11] Muth, Gledhill, and Karns, 2001.

TABLE 5.—FROZEN AND REFRIGERATED PIZZAS: COMPARISON OF TOTAL COSTS OF PRINTING STICKERS AND PACKAGES[1]

[In thousands]

Product category	Packages			Stickers		
	Cost level			Cost level		
	Low	Medium	High	Low	Medium	High
Frozen & refrigerated pizzas	740	1,287	1,834	6,880	12,642	17,940

Source: RTI Labeling Cost Model (Muth, Gledhill, and Karns, 2001).
[1] Estimated for 2001.

d. Labeling Approval

FSIS will generically approve the necessary modifications made to labels of existing pizza products needed to make these products compliant with the new labeling requirement. Thus, for existing pizza products, there will be no additional costs associated with the submission of labels for approval from FSIS. Also, once the three-year effective date for the labeling requirement has expired, manufacturers will be able to remove the meat or poultry content statement because the statement will be a non-mandatory feature. Therefore, there will be no incremental cost attributed to the final rule.

3. Other Costs

Other costs associated with the rule are voluntary. Companies that chose to develop and market new styles of pizza will incur the normal costs of production, labeling, and marketing as before. Labels for new pizza products may require formal approval from FSIS if they do not qualify for generic approval. Thus, manufacturers of new pizza products may incur costs to obtain formal label approval from FSIS. Companies that chose to identify products with a descriptive name rather than as a ''pizza'', *e.g.,* ''sausage, cheese, and sauce on a crust,'' will not be subject to the meat or poultry content labeling requirement.

Additionally, when the three-year effective date for the final rule has elapsed, companies that chose to remove the percent meat or poultry statement from their product labels will incur similar administrative and graphic design costs to modify their labels should they choose to remove this statement. However, companies will remove the percent meat or poultry statement from their product labels, if they believe that the benefits exceed the costs of removing the statement. FSIS does not believe that this is a cost of the final rule.

4. Total Costs

The total cost associated with the requirement that the percent of meat or poultry be conveyed on the labeling of meat or poultry pizzas is estimated at the mid-range point of $1,287,270 industry-wide or $8,305 (administrative cost—$3,185 and graphic design costs—$5,120) per firm for the three-year period. The actual costs will be lower than the estimated total costs because the analysis included the cost of changing the labels for all pizzas including cheese and vegetable and cheese pizzas that are not affected by the final rule. The final rule will be cost-beneficial because FSIS believes that the non-quantifiable benefits of providing consumers a greater variety of meat pizzas that have varied and potentially improved nutritional profiles and protecting consumers from any potential misrepresentation of the amount of meat and poultry content of pizzas justifies the cost to companies of providing the percent label of meat and poultry content on pizzas.

VI. Effect on Small Entities

FSIS has examined the economic implications of the final rule as required by the Regulatory Flexibility Act (5 U.S.C. 601–612). If a rule has a significant economic impact on a substantial number of small entities, the Regulatory Flexibility Act requires that the regulatory options that would lessen the economic effect of the rule on small entities be analyzed. FSIS has determined that the final rule will not have a significant impact on a substantial number of small entities.

FSIS has estimated the annualized cost impact on 149 small entities potentially affected by the final rule. The annualized costs to small meat and poultry pizza manufacturers are estimated to be approximately $8,640 over three years, or $2,880 annualized. The annualized cost of this final rule does not exceed $6,711 which equates to 1 percent of the average small entity annual revenue, and therefore the impact of the final rule is considered not significant.

In addition, the cost of modifying the label is offset by the fact that manufacturers will be permitted to exhaust their current inventory of pre-printed packages and therefore will not experience any additional cost of retiring unused packages.

Executive Order 12988

This final rule has been reviewed under Executive Order 12988, Civil Justice Reform. This final rule: (1) Preempts State and local laws and regulations that are inconsistent with this rule; (2) has no retroactive effect; and (3) does not require administrative proceedings before parties may file suit in court challenging this rule. However, the administrative procedures specified in 9 CFR 306.5, 381.35, and 590.320 through 590.370 must be exhausted before any judicial challenge of the application of the provisions of this rule, if the challenge involves any decision of an FSIS employee relating to inspection services provided under the FMIA or PPIA.

Paperwork Requirements

FSIS has reviewed the paperwork and recordkeeping requirements in this final rule in accordance with the Paperwork Reduction Act and has determined that the paperwork requirements have already been accounted for in the Marking, Labeling, and Packaging Material information collection approved by the Office of Management and Budget (OMB). The OMB approval number for the Marking, Labeling, and Packaging Material information collection is 0583–0092.

Additional Public Notification

Public awareness of all segments of rulemaking and policy development is important. Consequently, in an effort to better ensure that minorities, women, and persons with disabilities are aware of this final rule, FSIS will announce it and make copies of this **Federal Register** publication available through the FSIS Constituent Update. FSIS provides a weekly Constituent Update, which is communicated via Listserv, a free e-mail subscription service. In addition, the update is available on-line through the FSIS web page located at *http://www.fsis.usda.gov*. The update is

used to provide information regarding FSIS policies, procedures, regulations, **Federal Register** notices, public meetings, recalls, and any other types of information that could affect or would be of interest to our constituents/stakeholders. The constituent Listserv consists of industry, trade, and farm groups, consumer interest groups, allied health professionals, scientific professionals, and other individuals that have requested to be included. Through the Listserv and web page, FSIS is able to provide information to a much broader, more diverse audience than would otherwise be possible.

For more information contact the Congressional and Public Affairs Office, at (202) 720–9113. To be added to the free e-mail subscription service (Listserv) go to the ''Constituent Update'' page on the FSIS Web site at *http://www.fsis.usda.gov/oa/update/update.htm*. Click on the ''Subscribe to the Constituent Update Listserv'' link, then fill out and submit the form.

List of Subjects

9 CFR Part 317

Food labeling, Meat inspection.

9 CFR Part 319

Food grades and standards, Food labeling, Meat inspection.

9 CFR Part 381

Food labeling, Poultry and poultry products.

■ For the reasons stated in the preamble, FSIS amends 9 CFR Chapter III as follows:

PART 317—LABELING, MARKING DEVICES, AND CONTAINERS

■ 1. The authority citation for part 317 continues to read as follows:

Authority: 21 U.S.C. 601–695; 7 CFR 2.18, 2.53.

■ 2. Section 317.8 is amended by adding a new paragraph (b)(40) to read as follows:

§ 317.8 False or misleading labeling or practices generally; specific prohibitions and requirements for labels and containers.

(b) * * *

(40) Products identified as ''pizza'' that list a meat component as part of the product name must bear a parenthetical statement contiguous to the ingredients statement that conveys the percent of the cooked, cured, or dried meat component in the product. This paragraph shall expire on October 30, 2006.

* * * * *

PART 319—DEFINITIONS AND STANDARDS OF IDENTITY OR COMPOSITION

■ 3. The authority citation for part 319 continues to read as follows:

Authority: 7 U.S.C. 450, 1901–1906; 21 U.S.C. 601–695; 7 CFR 2.18, 2.53.

§ 319.600 Removed and Reserved]

■ 4. Section 319.600 is removed and reserved.

PART 381—POULTRY PRODUCTS INSPECTION REGULATIONS

■ 5. The authority citation for part 381 continues to read as follows:

Authority: 7 U.S.C. 138f, 450; 21 U.S.C. 451–470; 7 CFR 2.18, 2.53.

■ 6. Section 381.129 is amended by adding a new paragraph (f) to read as follows:

§ 381.129 False or misleading labeling or containers.

* * * * *

(f) Products identified as ''pizza'' that list a poultry component as part of the product name must bear a parenthetical statement contiguous to the ingredients statement that conveys the percent of the cooked, cured, or dried poultry component in the product. This paragraph shall expire on October 30, 2006.

Done at Washington, DC: July 28, 2003.

Linda Swacina,

Acting Administrator.

[FR Doc. 03–19505 Filed 7–30–03; 8:45 am]

BILLING CODE 3410–DM–P

NUCLEAR REGULATORY COMMISSION

10 CFR Part 110

RIN 3150–AH21

General License for Import of Major Nuclear Reactor Components

AGENCY: Nuclear Regulatory Commission.

ACTION: Direct final rule; confirmation of effective date.

SUMMARY: The Nuclear Regulatory Commission (NRC) is confirming the effective date of August 11, 2003, for the direct final rule that appeared in the **Federal Register** of May 28, 2003 (68 FR 31587). This direct final rule amended the NRC's regulations to issue a general license for the import of major components of utilization facilities for end-use at NRC-licensed reactors. This document confirms the effective date of the direct final rule.

DATES: The effective date of August 11, 2003, is confirmed for this direct final rule.

ADDRESSES: Documents related to this rulemaking, including comments received, may be examined at the NRC Public Document Room, Room O–1F23, 11555 Rockville Pike, Rockville, MD. These same documents may also be viewed and downloaded electronically via the rulemaking Web site (*http://ruleforum.llnl.gov*). For information about the interactive rulemaking Web site, contact Ms. Carol Gallagher (301) 415–5905; email: *CAG@nrc.gov.*

FOR FURTHER INFORMATION CONTACT: Grace H. Kim, Senior Attorney, Office of the General Counsel, U.S. Nuclear Regulatory Commission, Washington, DC 20555–0001, telephone (301) 415–3605, email *GHK@nrc.gov.*

SUPPLEMENTARY INFORMATION: On May 28, 2003 (68 FR 31587), the NRC published in the **Federal Register** a direct final rule amending its regulations in 10 CFR Part 110 to issue a general license for the import of major components of utilization facilities for end-use at NRC-licensed reactors. The amendment facilitates imports of major components of domestic nuclear reactors in furtherance of protection of public health and safety and reduces unnecessary regulatory burdens related to the maintenance of NRC-licensed reactors. In the direct final rule, NRC stated that if no significant adverse comments were received, the direct final rule would become final on the date noted above. The NRC did not receive any comments that warranted withdrawal of the direct final rule. Therefore, this rule will become effective as scheduled.

Dated at Rockville, Maryland, this 25th day of July, 2003.

For the Nuclear Regulatory Commission.

Betty K. Golden,

Acting Chief, Rules and Directives Branch, Division of Administrative Services, Office of Administration.

[FR Doc. 03–19489 Filed 7–30–03; 8:45 am]

BILLING CODE 7590–01–P

DEPARTMENT OF TRANSPORTATION

Federal Aviation Administration

14 CFR Part 39

[Docket No. 2000–NM–66–AD; Amendment 39–13248; AD 2003–15–05]

RIN 2120–AA64

Airworthiness Directives; Empresa Brasileira de Aeronautica S.A. (EMBRAER) Model EMB–120 Series Airplanes

AGENCY: Federal Aviation Administration, DOT.

ACTION: Final rule.

SUMMARY: This amendment supersedes an existing airworthiness directive (AD), applicable to certain EMBRAER Model EMB–120 series airplanes, that currently requires repetitive visual checks or inspections to verify that the flight idle stop system circuit breakers are closed, and functional tests to determine if the backup flight idle stop system is operative. This amendment requires modification of the secondary flight idle stop system (SFISS), which terminates the repetitive actions. This amendment is prompted by issuance of mandatory continuing airworthiness information by a foreign civil airworthiness authority. The actions specified by this AD are intended to prevent inadvertent or intentional operation with the power levers below the flight idle stop during flight for airplanes that are not certificated for in-flight operation, which could result in engine overspeed and consequent loss of controllability of the airplane.

DATES: Effective September 4, 2003.

The incorporation by reference of certain publications, as listed in the regulations, is approved by the Director of the Federal Register as of September 4, 2003.

The incorporation by reference of certain other publications, as listed in the regulations, was approved previously by the Director of the Federal Register as of September 23, 1992 (57 FR 40838, September 8, 1992).

ADDRESSES: The service information referenced in this AD may be obtained from Empresa Brasileira de Aeronautica S.A. (EMBRAER), P.O. Box 343—CEP 12.225, Sao Jose dos Campos—SP, Brazil. This information may be examined at the Federal Aviation Administration (FAA), Transport Airplane Directorate, Rules Docket, 1601 Lind Avenue, SW., Renton, Washington; or at the Office of the Federal Register, 800 North Capitol Street, NW., suite 700, Washington, DC.

FOR FURTHER INFORMATION CONTACT: Todd Thompson, Aerospace Engineer, International Branch, ANM–116, FAA, Transport Airplane Directorate, 1601 Lind Avenue, SW., Renton, Washington 98055–4056; telephone (425) 227–1175; fax (425) 227–1149.

SUPPLEMENTARY INFORMATION: A proposal to amend part 39 of the Federal Aviation Regulations (14 CFR part 39) by superseding AD 92–16–51, amendment 39–8355 (57 FR 40838, September 8, 1992), which is applicable to certain EMBRAER Model EMB–120 series airplanes, was published as a second supplemental notice of proposed rulemaking (NPRM) in the **Federal Register** on May 15, 2002 (67 FR 34641). That action proposed to continue to require repetitive visual checks or inspections to verify that the flight idle stop system circuit breakers are closed, and functional tests to determine if the backup flight idle stop system is operative. That action proposed to remove one airplane from the applicability, and add new inspections and corrective actions if necessary. Additionally, that action proposed to require modification of the secondary flight idle stop system (SFISS), which would terminate the repetitive actions.

Comments

Interested persons have been afforded an opportunity to participate in the making of this amendment. Due consideration has been given to the comments received to the second supplemental NPRM.

Request To Withdraw Proposed AD

One commenter states that an AD addressing the in-flight reversing issue is unjustified and inappropriate, and suggests that the proposed AD be withdrawn. The commenter asserts that an AD is unjustified because the subject unsafe condition is a pilot training issue and that, by adding further complexity to the propeller reversing controls, the proposed AD would only increase the opportunities for mechanical malfunction instead of improving safety. The commenter suggests that, instead of issuing an AD to address the unsafe condition, the FAA require operators to provide proper pilot training and oral testing specifically addressing the in-flight reversing issue.

The FAA does not agree that the AD be withdrawn or that the proposed actions would increase the opportunities for mechanical malfunction of the SFISS. We do not consider this unsafe condition to be simply a result of inadequate pilot training. Operational experience has shown that the existing SFISS is vulnerable to certain maintenance-originated failure modes, which could affect the operational reliability of the system. In addition, such failure modes do not result in a visual indication to the flightcrew of an inoperable condition. We find that these reliability concerns necessitate mandating installation of a more reliable SFISS design, one that also provides flightcrews with a real-time indication of the system's operability. We have determined that this design change adds more reliability and does not add significant complexity to the SFISS. Therefore, we find it necessary to issue the AD as proposed.

Request To Add Service Information for Certain Repair Procedures

The other commenter, the manufacturer, states that EMBRAER Service Bulletins 120–76–0018 and 120–76–0022 will be revised to include procedures for the bellcrank bolt hole repair provided in paragraph (e) of the second supplemental NPRM. The commenter also states that the revised service bulletins would eliminate the need for operators to contact the FAA or the Departmento de Aviacao Civil (DAC) (or its delegated agent) for approved methods of accomplishing the repair.

We agree. Since the issuance of the second supplemental NPRM, the manufacturer has issued EMBRAER Service Bulletins 120–76–0018, Change 06, dated August 9, 2002; and 120–76–0022, Change 03, dated August 9, 2002. The second supplemental NPRM specified that the FAA or DAC (or its delegated agent) be contacted for an approved method of compliance for the proposed repair. We have reviewed and approved these revised service bulletins and find that they do contain the appropriate repair instructions. Accordingly, we have revised paragraph (e) of this final rule to add those revised service bulletins as additional options for accomplishing the repair. However, we have not removed the provision for contacting the FAA or DAC (or its delegated agent) from that paragraph. Changing the requirements in such a manner would require us to issue a third supplemental NPRM, and we find that further delay in issuing this AD would be inappropriate in light of the identified unsafe condition.

Request To Remove Reference to Certain Service Information

The same commenter suggests that reference to EMBRAER Service Bulletin 120–76–0015 be removed from the proposed requirements because it is applicable to only one airplane (serial number (S/N) 120068), currently

operated under Brazilian registry, and therefore, does not affect the U.S. fleet.

We do not agree. We consider that those requirements with reference to Service Bulletin 120–76–0015 are necessary to be included in this AD to ensure that the unsafe condition is addressed in the event that the subject airplane is imported and placed on the U.S. Register in the future. No change to the final rule is necessary in this regard.

Conclusion

After careful review of the available data, including the comments noted above, the FAA has determined that air safety and the public interest require the adoption of the rule with the change previously described. The FAA has determined that this change will neither increase the economic burden on any operator nor increase the scope of the AD.

Changes to 14 CFR Part 39/Effect on the AD

On July 10, 2002, the FAA issued a new version of 14 CFR part 39 (67 FR 47997, July 22, 2002), which governs the FAA's airworthiness directives system. The regulation now includes material that relates to altered products, special flight permits, and alternative methods of compliance. However, for clarity and consistency in this final rule, we have retained the language of the second supplemental NPRM regarding that material.

Labor Rate Increase

After the second supplemental NPRM was issued, we reviewed the figures we use to calculate the labor rate to do the required actions. To account for various inflationary costs in the airline industry, we find it appropriate to increase the labor rate used in these calculations from $60 per work hour to $65 per work hour. The economic impact information, below, has been revised to reflect this increase in the specified hourly labor rate.

Cost Impact

The FAA estimates that 230 EMBRAER Model EMB–120 series airplanes of U.S. registry will be affected by this AD.

The actions that are currently required by AD 92–16–51 take approximately 5 work hours per airplane to accomplish, at an average labor rate of $60 per work hour. Based on these figures, the cost impact of that AD on U.S. operators is estimated to be $69,000, or $300 per airplane, per inspection cycle.

The approximate cost, at an average labor rate of $65 per work hour, for the modifications required by this AD, are listed in the following table:

ESTIMATED COSTS

Service bulletin	Work hours	Parts cost	Cost per airplane
120–76–0015:			
Part I	5	$4,376	$4,701
Part II	3	14,331	14,526
Part III	1	53	118
120–76–0018:			
Part I	130	22,218	30,668
Part II	1	(1)	(1)
120–76–0022:			
Part I	3	14,456	14,651
Part II	3	2,465	2,660
Part III	3	14,525	14,720
Part IV	1	53	118

1 Cost varies with configuration.

Therefore, based on the figures included in the table above, the cost impact of the modification required by this AD on U.S. operators is estimated to range from $118 to $30,668 per airplane.

The cost impact figures discussed above are based on assumptions that no operator has yet accomplished any of the current or proposed requirements of this AD action, and that no operator would accomplish those actions in the future if this AD were not adopted. The cost impact figures discussed in AD rulemaking actions represent only the time necessary to perform the specific actions actually required by the AD. These figures typically do not include incidental costs, such as the time required to gain access and close up, planning time, or time necessitated by other administrative actions.

Regulatory Impact

The regulations adopted herein will not have a substantial direct effect on the States, on the relationship between the national Government and the States, or on the distribution of power and responsibilities among the various levels of government. Therefore, it is determined that this final rule does not have federalism implications under Executive Order 13132.

For the reasons discussed above, I certify that this action (1) is not a ''significant regulatory action'' under Executive Order 12866; (2) is not a ''significant rule'' under DOT Regulatory Policies and Procedures (44 FR 11034, February 26, 1979); and (3) will not have a significant economic impact, positive or negative, on a substantial number of small entities under the criteria of the Regulatory Flexibility Act. A final evaluation has been prepared for this action and it is contained in the Rules Docket. A copy of it may be obtained from the Rules Docket at the location provided under the caption **ADDRESSES.**

List of Subjects in 14 CFR Part 39

Air transportation, Aircraft, Aviation safety, Incorporation by reference, Safety.

Adoption of the Amendment

■ Accordingly, pursuant to the authority delegated to me by the Administrator, the Federal Aviation Administration amends part 39 of the Federal Aviation Regulations (14 CFR part 39) as follows:

PART 39—AIRWORTHINESS DIRECTIVES

■ 1. The authority citation for part 39 continues to read as follows:

Authority: 49 U.S.C. 106(g), 40113, 44701.

§ 39.13 [Amended]

■ 2. Section 39.13 is amended by removing amendment 39–8355 (57 FR 40838, September 8, 1992), and by adding a new airworthiness directive (AD), amendment 39–13248, to read as follows:

2003–15–05 Empresa Brasileira de Aeronautica S.A. (EMBRAER): Amendment 39–13248. Docket 2000–NM–66–AD. Supersedes AD 92–16–51, Amendment 39–8355.

Applicability: Model EMB–120 series airplanes, certificated in any category; serial number 120004, and serial numbers 120006 through 120354 inclusive.

Note 1: This AD applies to each airplane identified in the preceding applicability provision, regardless of whether it has been modified, altered, or repaired in the area subject to the requirements of this AD. For airplanes that have been modified, altered, or repaired so that the performance of the requirements of this AD is affected, the owner/operator must request approval for an alternative method of compliance in accordance with paragraph (f)(1) of this AD. The request should include an assessment of the effect of the modification, alteration, or repair on the unsafe condition addressed by this AD; and, if the unsafe condition has not been eliminated, the request should include specific proposed actions to address it.

Compliance: Required as indicated, unless accomplished previously.

To prevent inadvertent or intentional operation with the power levers below the flight idle stop during flight for airplanes that are not certificated for in-flight operation, which could result in engine overspeed and consequent loss of controllability of the airplane, accomplish the following:

Restatement of Certain Requirements of AD 92–16–51

Checks/Inspections

(a) For all airplanes: Within 5 days after September 23, 1992 (the effective date of AD 92–16–51, amendment 39–8355), and thereafter prior to the first flight of each day until the requirements of paragraph (d) of this AD have been accomplished, accomplish paragraph (a)(1) or (a)(2) of this AD, as applicable:

(1) For airplanes on which an inspection window has been installed on the left lateral console panel that permits visibility of the flight idle stop solenoid circuit breakers: Using an appropriate light source, perform a visual check to verify that both ''FLT IDLE STOP SOL'' circuit breakers CB0582 and CB0583 for engine 1 and engine 2 are closed.

Note 2: This check may be performed by a flightcrewmember.

Note 3: Instructions for installation of an inspection window can be found in EMBRAER Information Bulletin 120–076–0003, dated November 19, 1991; or EMBRAER Service Bulletin 120–076–0014, dated July 29, 1992.

(2) For airplanes on which an inspection window has not been installed on the left lateral console panel: Perform a visual inspection to verify that both ''FLT IDLE STOP SOL'' circuit breakers CB0582 and CB0583 for engine 1 and engine 2 are closed.

(b) As a result of the check or inspection performed in accordance with paragraph (a) of this AD: If circuit breakers CB0582 and CB0583 are not closed, prior to further flight, reset them and perform the functional test specified in paragraph (c) of this AD.

Functional Test

(c) Within 5 days after September 23, 1992, and thereafter at intervals not to exceed 75 hours time-in-service, or immediately following any maintenance action where the power levers are moved with the airplane on jacks, until the requirements of paragraph (d) of this AD have been accomplished, conduct a functional test of the backup flight idle stop system for engine 1 and engine 2 by performing the following steps:

(1) Move both power levers to the ''MAX'' position.

(2) Turn the aircraft power select switch on.

(3) Open both ''AIR/GROUND SYSTEM'' circuit breakers CB0283 and CB0286 to simulate in-flight conditions with weight-off-wheels. Wait for at least 15 seconds, then move both power levers back toward the propeller reverse position with the flight idle gate triggers raised. Verify that the power lever for each engine cannot be moved below the flight idle position, even though the flight idle gate trigger on each power lever is raised.

(4) If the power lever can be moved below the flight idle position, prior to further flight, restore the backup flight idle stop system to the configuration specified in EMBRAER 120–076–0009, Change No. 4, dated November 1, 1990; and perform a functional test.

Note 4: If the power lever can be moved below flight idle, this indicates that the backup flight idle stop system is inoperative.

(5) Move both power levers to the ''MAX'' position.

(6) Close both ''AIR/GROUND SYSTEM'' circuit breakers CB0283 and CB0286. Wait for at least 15 seconds, then move both power levers back toward the propeller reverse position with the flight idle gate triggers raised. Verify that the power lever for each engine can be moved below the flight idle position.

(7) If either or both power levers cannot be moved below the flight idle position, prior to further flight, inspect the backup flight idle stop system and the flight idle gate system, and accomplish either paragraph (c)(7)(i) or (c)(7)(ii) of this AD, as applicable:

(i) If the backup flight idle stop system is failing to disengage with weight-on-wheels, prior to further flight, restore the system to the configuration specified in EMBRAER Service Bulletin 120–076–0009, Change No. 4, dated November 1, 1990.

(ii) If the flight idle gate system is failing to open even though the trigger is raised, prior to further flight, repair in accordance with the EMBRAER Model EMB–120 maintenance manual.

(8) Turn the power select switch off. The functional test is completed.

New Requirements of This AD

Terminating Action

(d) Within 18 months or 4,000 flight hours after the effective date of this AD, whichever occurs earlier, modify the secondary flight idle stop system (SFISS), as required by paragraph (d)(1), (d)(2), or (d)(3) of this AD; as applicable. Accomplishment of the modification constitutes terminating action for the requirements of this AD.

(1) For airplanes having serial number 120004, and serial numbers 120006 through 120067 inclusive, and 120069 through 120344 inclusive; as listed in EMBRAER Service Bulletin 120–76–0018, Change 04, dated March 30, 2001: Accomplish the actions required by either paragraph (d)(1)(i) or (d)(1)(ii) of this AD, as applicable.

(i) If the actions specified by EMBRAER Service Bulletin 120–76–0018, Change 01, dated September 9, 1999; or Change 02, dated November 22, 1999; have not been accomplished: Modify the SFISS per the Accomplishment Instructions of EMBRAER Service Bulletin 120–76–0018, Change 03, dated May 26, 2000; or Change 04, dated March 30, 2001; or

(ii) If the actions specified by EMBRAER Service Bulletin 120–76–0018, Change 01 or Change 02 have been accomplished: Perform additional inspections per Part II of the Accomplishment Instructions of EMBRAER Service Bulletin 120–76–0018, Change 04.

(2) For the airplane having serial number 120068: Modify the SFISS per the Accomplishment Instructions of EMBRAER Service Bulletin 120–76–0015, Change 06, dated October 3, 2000.

(3) For airplanes having serial numbers 120345 through 120354 inclusive: Modify the SFISS per the Accomplishment Instructions of EMBRAER Service Bulletin 120–76–0022, Change 01, dated October 9, 2000; or Change 02, dated February 8, 2001.

Note 5: This AD references the following service information for applicability, inspection, and modification information: EMBRAER Service Bulletin 120–76–0015, Change 06, dated October 3, 2000; EMBRAER Service Bulletin 120–76–0018, Change 01, dated September 9, 1999; EMBRAER Service Bulletin 120–76–0018, Change 02, dated November 22, 1999; EMBRAER Service Bulletin 120–76–0018, Change 04, dated March 30, 2001; EMBRAER Service Bulletin 120–76–0022, Change 01, dated October 9, 2000; and EMBRAER Service Bulletin 120–76–0022, Change 02, dated February 8, 2001. In addition, this AD specifies compliance-time requirements beyond those included in Brazilian airworthiness directive 90–07–04R4, dated October 4, 1999; and the service information. Where there are differences between this AD and previously referenced documents, this AD prevails.

Note 6: Accomplishment of the requirements of paragraph (d) of this AD does not remove or otherwise alter the requirement to perform the repetitive (400-flight-hour) CAT 8 task checks specified by the Maintenance Review Board.

Corrective Actions

(e) During any visual check or inspection required by this AD, if any countersunk-head

bolt was not used to attach the power control cable to the bellcrank, or if any hex-head bolt was used to attach the cable to the bellcrank: Prior to further flight, repair per a method approved by the Manager, International Branch, ANM–116, Transport Airplane Directorate, FAA; or the Departmento de Aviacao Civil (DAC) (or its delegated agent). Accomplishment of the repair per EMBRAER Service Bulletin 120–76–0018, Change 06, dated August 9, 2002; or EMBRAER Service Bulletin 120–76–0022, Change 03, dated August 9, 2002; as applicable; is acceptable for compliance with the requirements of this paragraph.

Alternative Methods of Compliance

(f)(1) An alternative method of compliance or adjustment of the compliance time that provides an acceptable level of safety may be used if approved by the Manager, International Branch, ANM–116. Operators shall submit their requests through an appropriate FAA Principal Maintenance Inspector, who may add comments and then send it to the International Branch, ANM–116.

(2) Alternative methods of compliance, approved previously for paragraphs (a), (b), and (c) of AD 92–16–51, are considered to be approved as alternative methods of compliance with the inspection requirements of paragraphs (a), (b), and (c) of this AD. No alternative methods of compliance have been approved per AD 92–16–51 as terminating action for this AD.

Note 7: Information concerning the existence of approved alternative methods of compliance with this AD, if any, may be obtained from the International Branch, ANM–116.

Special Flight Permits

(g) Special flight permits may be issued per sections 21.197 and 21.199 of the Federal Aviation Regulations (14 CFR 21.197 and 21.199) to operate the airplane to a location where the requirements of this AD can be accomplished.

Incorporation by Reference

(h) Unless otherwise specified by this AD, the actions shall be done in accordance with the applicable EMBRAER service bulletins listed in Table 1 of this AD as follows:

TABLE 1.—APPLICABLE SERVICE BULLETINS

Service bulletin	Page numbers	Change number shown on page	Date shown on page
120–076–0009, Change No. 4, November 1, 1990	1–87	4	November 1, 1990
120–76–0015, Change 06, October 3, 2000	1–44	06	October 3, 2000
120–76–0018, Change 03, May 26, 2000	1–117	03	May 26, 2000
120–76–0018, Change 04, March 30, 2001	1–117	04	March 30, 2001
120–76–0018, Change 06, August 9, 2002	1, 2, 7–10, 13–26, 31, 32, 115–119	06	August 9, 2002
	5, 6	04	March 30, 2001
	3, 4, 11, 12, 27–30, 33–114	03	May 26, 2000
120–76–0022, Change 01, October 9, 2000	1–43	01	October 9, 2000
120–76–0022, Change 02, February 8, 2001	1, 2, 43	02	February 8, 2001
	3–42	01	October 9, 2000
120–76–0022, Change 03, August 9, 2002	1	02	February 8, 2001
	2, 8, 14, 15, 17–19, 27, 28, 34–36, 42–45	03	August 9, 2002
	3–7, 9–13, 16, 20–26, 29–33, 37–41	01	October 9, 2000

(1) The incorporation by reference of EMBRAER service bulletins 120–76–0015, Change 06; 120–76–0018, Change 03; 120–76–0018, Change 04; 120–76–0018, Change 06; 120–76–0022, Change 01; 120–76–0022, Change 02; and 120–76–0022, Change 03; as stated in the table above; is approved by the Director of the Federal Register in accordance with 5 U.S.C. 552(a) and 1 CFR part 51.

(2) The incorporation by reference of EMBRAER Service Bulletin 120–076–0009, Change No. 4, dated November 1, 1990, was approved previously by the Director of the Federal Register as of September 23, 1992 (57 FR 40838, September 8, 1992).

(3) Copies may be obtained from Empresa Brasileira de Aeronautica S.A. (EMBRAER), P.O. Box 343—CEP 12.225, Sao Jose dos Campos—SP, Brazil. Copies may be inspected at the FAA, Transport Airplane Directorate, 1601 Lind Avenue, SW., Renton, Washington; or at the Office of the Federal Register, 800 North Capitol Street, NW., suite 700, Washington, DC.

Note 8: The subject of this AD is addressed in Brazilian airworthiness directive 90–07–04R4, dated October 4, 1999.

Effective Date

(i) This amendment becomes effective on September 4, 2003.

Issued in Renton, Washington, on July 22, 2003.

Ali Bahrami,

Acting Manager, Transport Airplane Directorate, Aircraft Certification Service.

[FR Doc. 03–19055 Filed 7–30–03; 8:45 am]

BILLING CODE 4910–13–P

DEPARTMENT OF TRANSPORTATION

Federal Aviation Administration

14 CFR Part 71

[Airspace Docket No. FAA–02–ANM–07]

Establishment of Class E5 Airspace at Afton Municipal Airport, Afton, WY

AGENCY: Federal Aviation Administration (FAA), DOT.

ACTION: Final rule.

SUMMARY: This action will establish Class E5 airspace at Afton, WY. Recently developed Area Navigation (RNAV)/Global Positioning System (GPS) Standard Terminal Arrival Routes (STARs) and Departure Procedures (SIDs) have made this proposal necessary. The establishment of Class E5 airspace is for containment of aircraft executing Instrument Flight Rule (IFR) operations at Afton Municipal Airport within controlled airspace. The intended effect of this action is to provide an increased level of safety for aircraft executing IFR operations between the terminal and en route phase of flight at Afton Municipal Airport, Afton, WY.

EFFECTIVE DATE: 0901 Coordinated Universal Time (UTC), October 30, 2003.

FOR FURTHER INFORMATION CONTACT: Ed Haeseker, ANM–520.7, Federal Aviation Administration, Docket No. 02–ANM–07.

SUPPLEMENTARY INFORMATION:

History

Effective November 29, 2002, the FAA proposed to amend Title 14 Code of Federal Regulations, part 71 (14 CFR part 71) by establishing Class E5 airspace at Afton Municipal Airport,

Afton, WY. This was necessary to provide an increased level of safety for aircraft executing IFR operations between the terminal and en route phase of flight at Afton Municipal Airport, Afton, WY. Interested parties were invited to participate in this rule making proceeding by submitting written comments on the proposal. No comments were received.

The Rule

This amendment to 14 CFR part 71, establishes Class E5 airspace at Afton, WY. Class E airspace is necessary to provide adequate controlled airspace for IFR operations at Afton Municipal Airport. The FAA establishes Class E airspace where necessary to contain IFR aircraft transitioning between the terminal and en route environments. By this action, the FAA intends to provide for the safe and efficient use of the navigable airspace, and to promote safe flight operations under IFR conditions at the Afton Municipal Airport, Afton, WY.

The new Class E5 airspace will be depicted on aeronautical charts for pilot reference. The coordinates for this airspace docket are based on North American Datum 83. Class E5 airspace areas extending upward from 700 feet above the surface of the earth, are published in Paragraph 6005, of FAA Order 7400.9K dated August 30, 2002, and effective September 16, 2002, which is incorporated by reference in 14 CFR 71.1. The Class E5 airspace designation listed in this document will be published subsequently in the Order. The FAA has determined that this regulation only involves an established body of technical regulations for which frequent and routine amendments are necessary to keep them operationally current. It, therefore, (1) is not a ''significant regulatory action'' under Executive Order 12866; (2) is not a ''significant rule'' under DOT Regulatory Policies and Procedures (44 FR 11034; February 26, 1979); and (3) does not warrant preparation of a Regulatory Evaluation as the anticipated impact is so minimal. Since this is a routine matter that will only affect air traffic procedures and air navigation, it is certified that this rule will not have a significant economic impact on a substantial number of small entities under the criteria of the Regulatory Flexibility Act.

List of Subjects in 14 CFR Part 71

Aviation, Incorporated by reference, navigation (air).

Adoption of the Amendment

■ In consideration of the foregoing, the Federal Aviation Administration amends 14 CFR part 71 as follows:

PART 71—DESIGNATION OF CLASS A, CLASS B, CLASS C, CLASS D, AND CLASS E AIRSPACE AREAS; AIRWAYS; ROUTES; AND REPORTING POINTS [AMENDED]

■ The authority citation for 14 CFR part 71 continues to read as follows:

Authority: 49 U.S.C. 106(g), 40103, 40113, 40120; E.O. 10854, 24 FR 9565, 3 CFR, 1959–1963 Comp., p. 389; 14 CFR 11.69.

§ 71.1 [Amended]

The incorporation by reference in 14 CFR 71.1 of the Federal Aviation Administration Order 7400.9K, Airspace Designations and Reporting Points, dated August 30, 2002, and effective September 16, 2002, is amended as follows:

Paragraph 6005 Class E5 airspace areas extending upward from 700 feet or more above the surface of the earth.

* * * * *

ANM UT E5 Afton, WY [New]

Afton Municipal Airport, WY
(Lat. 42°42′41″ N., long. 110°56′32″ W.)

That airspace extending upward from 700 feet above the surface of the earth within a 6.5 mile radius of the Afton Municipal Airport, and within 2 miles either side of the 341° (355° True) bearing from the airport extending from the 6.5 mile radius to 7.5 miles north of the airport, and within 2 miles either side of the 171° (185° True) bearing from the airport extending from the 6.5 mile radius to 19.3 miles south of the airport.

Issued in Seattle, Washington on July 17, 2003.

ViAnne Fowler,

Acting Assistant Manager, Air Traffic Division, Northwest Mountain Region.

[FR Doc. 03–19406 Filed 7–30–03; 8:45 am]

BILLING CODE 4910–13–M

DEPARTMENT OF TRANSPORTATION

Federal Aviation Administration

14 CFR Part 71

[Docket No. FAA–2003–15461; Airspace Docket No. 03–ACE–59]

Modifications of Class E Airspace; Beatrice, NE

AGENCY: Federal Aviation Administration (FAA), DOT.

ACTION: Direct final rule; request for comments.

SUMMARY: An examination of controlled airspace for Beatrice, NE indicates it does not comply with criteria set forth in FAA Orders. A discrepancy in the location of the Shaw nondirectional radio beacon (NDB), used in the legal description for the Beatrice, NE Class E airspace, was also detected. This action corrects the discrepancies by modifying the Beatrice, NE Class E airspace and by incorporating the location of the Shaw NDB in the Class E airspace legal description.

DATES: This direct final rule is effective on 0901 UTC, October 30, 2003.

Comments for inclusion in the Rules Docket must be received on or before September 4, 2003.

ADDRESSES: Send comments on this proposal to the Docket Management System, U.S. Department of Transportation, Room Plaza 401, 400 Seventh Street, SW., Washington, DC 20590–0001. You must identify the Docket number FAA–2003–15461/ Airspace Docket No. 03–ACE–59, at the beginning of your comments. You may also submit comments on the Internet at *http://dms.dot.gov.* You may review the public docket containing the proposal, any comments received, and any final disposition in person in the Dockets Office between 9 a.m. and 5 p.m., Monday through Friday, except Federal holidays. The Docket Office (telephone 1–800–647–5527) is on the plaza level of the Department of Transportation NASSIF Building at the above address.

FOR FURTHER INFORMATION CONTACT: Brenda Mumper, Air Traffic Division, Airspace Branch, ACE–520A, DOT Regional Headquarters Building, Federal Aviation Administration, 901 Locust, Kansas City, MO 64106; telephone: (816) 329–2524.

SUPPLEMENTARY INFORMATION: This amendment to 14 CFR 71 modifies the Class E airspace area extending upward from 700 feet above the surface at Beatrice, NE. It expands the south extension of this airspace area an additional 2.4 miles to provide appropriate controlled airspace for aircraft executing the NDB–A Standard Instrument Approach Procedure (SIAP) to Beatrice Municipal Airport. It modifies the northwest extension of this airspace area by defining it with the Beatrice very high frequency omnidirectional radio range (VOR) 320° radial versus the current 325° radial. It incorporates the current location of the Shaw NDB and brings the legal description of this airspace area into compliance with FAA Order 7400.2E, Procedures for Handling Airspace Matters. The area will be depicted on appropriate aeronautical charts. Class E airspace areas extending upward from 700 feet or more above the surface of the

earth are published in paragraph 6005 of FAA Order 7400.9K, dated August 30, 2002, and effective September 16, 2002, which is incorporated by reference in 14 CFR 71.1. The Class E airspace designation listed in this document will be published subsequently in the Order.

The Direct Final Rule Procedure

The FAA anticipates that this regulation will not result in adverse or negative comment and, therefore, is issuing it as a direct final rule. Previous actions of this nature have not been controversial and have not resulted in adverse comments or objections. Unless a written adverse or negative comment, or a written notice of intent to submit an adverse or negative comment is received within the comment period, the regulation will become effective on the dates specified above. After the close of the comment period, the FAA will publish a document in the **Federal Register** indicating that no adverse or negative comments were received and confirming the date on which the final rule will become effective. If the FAA does receive, within the comment period, an adverse or negative comment, or written notice of intent to submit such a comment, a document withdrawing the direct final rule will be published in the **Federal Register**, and a notice of proposed rulemaking may be published with a new comment period.

Comments Invited

Interested parties are invited to participate in this rulemaking by submitting such written data, views, or arguments, as they may desire. Comments that provide the factual basis supporting the views and suggestions presented are particularly helpful in developing reasoned regulatory decisions on the proposal. Comments are specifically invited on the overall regulatory, aeronautical, economic, environmental, and energy-related aspects of the proposal. Communications should identify both docket numbers and be submitted in triplicate to the address listed above. Commenters wishing the FAA to acknowledge receipt of their comments on this notice must submit with those comments a self-addressed, stamped postcard on which the following statement is made: ''Comments to Docket No. FAA–2003–15461/Airspace Docket No. 03–ACE–59.'' The postcard will be date/time stamped and returned to the commenter.

Agency Findings

The regulations adopted herein will not have a substantial direct effect on the States, on the relationship between the national Government and the States, or on the distribution of power and responsibilities among the various levels of government. Therefore, it is determined that this final rule does not have federalism implications under Executive Order 13132.

The FAA has determined that this regulation is noncontroversial and unlikely to result in adverse or negative comments. For the reasons discussed in the preamble, I certify that this regulation (1) is not a ''significant regulatory action'' under Executive Order 12866; (2) is not a ''significant rule'' under Department of Transportation (DOT) Regulatory Policies and Procedures (44 FR 11034, February 26, 1979); and (3) if promulgated, will not have a significant economic impact, positive or negative, on a substantial number of small entities under the criteria of the Regulatory Flexibility Act.

List of Subjects in 14 CFR Part 71

Airspace, Incorporation by reference, Navigation (air).

Adoption of the Amendment

■ Accordingly, the Federal Aviation Administration amends 14 CFR part 71 as follows:

PART 71—DESIGNATION OF CLASS A, CLASS B, CLASS C, CLASS D, AND CLASS E AIRSPACE AREAS; AIRWAYS; ROUTES; AND REPORTING POINTS

■ 1. The authority citation for part 71 continues to read as follows:

Authority: 49 U.S.C. 106(g), 40103, 40113, 40120; E.O. 10854, 24 FR 9565, 3 CFR, 1959–1963 Comp., p. 389.

§ 71.1 [Amended]

■ 2. The incorporation by reference in 14 CFR 71.1 of Federal Aviation Administration Order 7400.9K, dated August 30, 2002, and effective September 16, 2002, is amended as follows:

Paragraph 6005 Class E airspace areas extending upward from 700 feet or more above the surface of the earth.

* * * * *

ACE NE E5 Beatrice, NE

Beatrice Municipal Airport, NE
(Lat. 40°18′05″ N., long. 96°45′15″ W.)
Beatrice VOR
(Lat. 40°18′05″ N., long. 96°45′17″ W.)
Shaw NDB
(Lat. 40°15′54″ N., long. 96°45′25″ W.)

That airspace extending upward from 700 feet above the surface within a 6.6-mile radius of Beatrice Municipal Airport and within 4.4 miles each side of the Beatrice VOR 320° radial extending from the 6.6-mile radius of the airport to 7 miles northwest of the VOR and within 3.1 miles each side of the 185° bearing from the Shaw NDB extending from the 6.6-mile radius of the airport to 7 miles south of Shaw NDB.

Issued in Kansas City, MO, on July 21, 2003.

Herman J. Lyons, Jr.,

Manager, Air Traffic Division, Central Region.

[FR Doc. 03–19408 Filed 7–30–03; 8:45 am]

BILLING CODE 4910–13–M

SECURITIES AND EXCHANGE COMMISSION

17 CFR Part 232

[Release Nos. 33–8255; 34–48204; 35–27700; 39–2409; IC–26013]

RIN 3235–AG96

Adoption of Updated EDGAR Filer Manual

AGENCY: Securities and Exchange Commission.

ACTION: Final rule.

SUMMARY: The Securities and Exchange Commission (the Commission) is adopting revisions to the EDGAR Filer Manual to reflect updates to the EDGAR system made primarily to improve the functionality of the SEC's Online Forms website. The website is currently used for preparing and submitting ownership reports, Forms 3, 4, 5 and their amendments, Forms 3/A, 4/A and 5/A, required under section 16(a) of the Securities Exchange Act of 1934, generally as required by section 403 of the Sarbanes-Oxley Act of 2002. Some of the improved functionality includes the ability to list holdings of securities separately from securities transactions; facilitating the reporting of gift, phantom stock plan and similar transactions; automatic entry of the filer's address by the system based on the filer's CIK number and the ability to change the address for the filing[1]; and XML schema and stylesheet updates to support these changes. In addition, the new release will include support for extended EDGAR filing and dissemination to 6 a.m., as a trial to assess its usefulness to filers; same day acceptance and dissemination of Form 3, 4 and 5 filings and Securities Act of 1933, Rule 462(b) filings, MEF form types, received on business days on or

[1] Changes of address will be effective for that filing only. EDGAR filers are reminded of their responsibility to ensure that their address of record, as reflected in the EDGAR database, is kept current. This can be done by selecting the Information Exchange—Retrieve/Edit Data option from the EDGAR OnlineForms Website.

before 10 p.m., eastern standard time; Form 8–K Items 10, 11, 12, and 13; new form types N–CSRS, N–PX and N–Q; and rescinded form types BW–2 and BW–3. The revisions to the Filer Manual reflect these changes within Volumes I, II and III, entitled ''EDGAR Release 8.6 EDGARLink Filer Manual'', ''EDGAR Release 8.6 Filer Manual N-SAR Supplement'', and ''EDGAR Release 8.6 OnlineForms Filer Manual'' respectively. The updated manual will be incorporated by reference into the Code of Federal Regulations.

EFFECTIVE DATE: July 31, 2003. The incorporation by reference of the EDGAR Filer Manual is approved by the Director of the Federal Register as of July 31, 2003.

FOR FURTHER INFORMATION CONTACT: In the Office of Information Technology, Rick Heroux at (202) 942–8800; for questions concerning Investment Management company filings, Ruth Armfield Sanders, Senior Special Counsel, or Shaswat K. Das, Senior Counsel, Division of Investment Management, at (202) 942–0978; and for questions concerning Corporation Finance company filings, Herbert Scholl, Office Chief, EDGAR and Information Analysis, Division of Corporation Finance, at (202) 942–2940.

SUPPLEMENTARY INFORMATION: Today we are adopting an updated EDGAR Filer Manual (Filer Manual). The Filer Manual describes the technical formatting requirements for the preparation and submission of electronic filings through the Electronic Data Gathering, Analysis, and Retrieval (EDGAR) system.[2] It also describes the requirements for filing using modernized EDGARLink.[3]

The Filer Manual contains all the technical specifications for filers to submit filings using the EDGAR system. Filers must comply with the applicable provisions of the Filer Manual in order to assure the timely acceptance and processing of filings made in electronic format.[4] Filers should consult the Filer Manual in conjunction with our rules governing mandated electronic filing when preparing documents for electronic submission.[5]

We will implement EDGAR Release 8.6 on July 28, 2003, to improve the functionality of the SEC's Online Forms website, to support new extended EDGAR filing and dissemination hours to 6 a.m., to support same day acceptance and dissemination of Form 3, 4 and 5 filings and Securities Act of 1933, Rule 462(b) filings, MEF form types, received on business days on or before 10 p.m., to support recent rulemaking activity related to the addition of the new Form 8–K Items 10, 11, 12, and 13, new form types N–CSRS, N–PX and N–Q and rescinded form types BW–2 and BW–3. This release also includes minor updates to submission Templates 1, 2, 3, and 5, and the EDGARLink software, to allow for new exhibit types: EX–31 and EX–32 and exhibits for use with Form N–CSR (submission types N–CSR and N–CSRS): EX–99.906CERT, EX–99.CERT and EX–99.CODE ETH; to disallow the use of exhibit types, EX–99.102P3 CERT, EX–99.133 CERT, EX–99.77Q3 CERT; to disallow the use of form types BW–2 and BW–3; to allow for the use of new form types N–CSRS and N–CSRS/A (for submission of certified semi-annual shareholder report of registered management investment companies); N–PX and N–PX/A (for submission of annual report of proxy voting record of registered management investment companies); and N–Q and N–Q/A (for submission of quarterly schedule of portfolio holdings of registered management investment company if and when the Commission adopts form N–Q); and to allow for the use of Form 8–K Items 10, 11, 12, and 13.

EDGAR 8.6 supports backward compatibility of the 8.5 templates as long as the reporting requirements for specific form types have not changed. EDGAR 8.6 server software supports all of the field identifiers that were valid in the 8.5 version of the PureEdge templates. Notice of the update has previously been provided on the EDGAR filing Web site and on the Commission's public website. The discrete updates are reflected on the filing Web site and in the updated Filer Manual Volumes.

Along with adoption of the Filer Manual, we are amending Rule 301 of Regulation S–T to provide for the incorporation by reference into the Code of Federal Regulations of today's revisions. This incorporation by reference was approved by the Director of the Federal Register in accordance with 5 U.S.C. 552(a) and 1 CFR Part 51.

You may obtain paper copies of the updated Filer Manual at the following address: Public Reference Room, U.S. Securities and Exchange Commission, 450 Fifth Street, NW., Washington DC 20549–0102. We will post electronic format copies on the Commission's Web site; the address for the Filer Manual is *http://www.sec.gov/info/edgar.shtml.* You may also obtain copies from Thomson Financial Inc, the paper and microfiche contractor for the Commission, at (800) 638–8241.

Since the Filer Manual relates solely to agency procedures or practice, publication for notice and comment is not required under the Administrative Procedure Act (APA).[6] It follows that the requirements of the Regulatory Flexibility Act [7] do not apply.

The effective date for the updated Filer Manual and the rule amendments is July 31, 2003. In accordance with the APA,[8] we find that there is good cause to establish an effective date less than 30 days after publication of these rules. The EDGAR system upgrade to Release 8.6 is scheduled to occur on July 26, 2003, becoming available on July 28, 2003. The Commission believes that it is necessary to coordinate the effectiveness of the updated Filer Manual with the scheduled system upgrade.

Statutory Basis

We are adopting the amendments to Regulation S–T under Sections 6, 7, 8, 10, and 19(a) of the Securities Act,[9] Sections 3, 12, 13, 14, 15, 23, and 35A of the Securities Exchange Act of 1934,[10] Section 20 of the Public Utility Holding Company Act of 1935,[11] Section 319 of the Trust Indenture Act

[2] We originally adopted the Filer Manual on July 1, 1993, with an effective date of July 26, 1993. Release No. 33–6986 (Apr. 1, 1993) [58 FR 18638]. We implemented the most recent update to the Filer Manual on April 30, 2003. *See* Release No. 33–8224 (May 7, 2003) [66 FR 24345].

[3] This is the filer assistance software we provide filers filing on the EDGAR system.

[4] *See* Rule 301 of Regulation S–T (17 CFR 232.301).

[5] *See* Release Nos. 33–6977 (Feb. 23, 1993) [58 FR 14628], IC–19284 (Feb. 23, 1993) [58 FR 14848], 35–25746 (Feb. 23, 1993) [58 FR 14999], and 33–6980 (Feb. 23, 1993) [58 FR 15009] in which we comprehensively discuss the rules we adopted to govern mandated electronic filing. *See also* Release No. 33–7122 (Dec. 19, 1994) [59 FR 67752], in which we made the EDGAR rules final and applicable to all domestic registrants; Release No. 33–7427 (July 1, 1997) [62 FR 36450], in which we adopted minor amendments to the EDGAR rules; Release No. 33–7472 (Oct. 24, 1997) [62 FR 58647], in which we announced that, as of January 1, 1998, we would not accept in paper filings that we require filers to submit electronically; Release No. 34–40934 (Jan. 12, 1999) [64 FR 2843], in which we made mandatory the electronic filing of Form 13F; Release No. 33–7684 (May 17, 1999) [64 FR 27888], in which we adopted amendments to implement the first stage of EDGAR modernization; Release No. 33–7855 (July 24, 2000) [65 FR 24788], in which we implemented EDGAR Release 7.0; Release No. 33–7999 (August 7, 2001) [66 FR 42941], in which we implemented EDGAR Release 7.5; Release No. 33–8007 (September 24, 2001) [66 FR 42829], in which we implemented EDGAR Release 8.0; Release No. 33–8224 (May 7, 2003) [66 FR 24345], in which we implemented EDGAR Release 8.5.

[6] 5 U.S.C. 553(b).

[7] 5 U.S.C. 601–612.

[8] 5 U.S.C. 553(d)(3).

[9] 15 U.S.C. 77f, 77g, 77h, 77j, and 77s(a).

[10] 15 U.S.C. 78c, 78*l*, 78m, 78n, 78o, 78w, and 78*ll*.

[11] 15 U.S.C. 79t.

of 1939,[12] and Sections 8, 30, 31, and 38 of the Investment Company Act of 1940.[13]

List of Subjects in 17 CFR Part 232

Incorporation by reference, Reporting and recordkeeping requirements, Securities.

Text of the Amendment

■ In accordance with the foregoing, Title 17, Chapter II of the Code of Federal Regulations is amended as follows:

PART 232—REGULATION S–T—GENERAL RULES AND REGULATIONS FOR ELECTRONIC FILINGS

■ 1. The authority citation for Part 232 continues to read as follows:

Authority: 15 U.S.C. 77f, 77g, 77h, 77j, 77s(a), 77sss(a), 78c(b), 78l, 78m, 78n, 78o(d), 78w(a), 78ll(d), 79t(a), 80a–8, 80a–29, 80a–30 and 80a–37.

■ 2. Section 232.301 is revised to read as follows:

§ 232.301 EDGAR Filer Manual.

Filers must prepare electronic filings in the manner prescribed by the EDGAR Filer Manual, promulgated by the Commission, which sets out the technical formatting requirements for electronic submissions. The requirements for filers using modernized EDGARLink are set forth in the EDGAR Release 8.6 EDGARLink Filer Manual Volume I, dated July 2003. Additional provisions applicable to Form N–SAR filers and Online Forms filers are set forth in the EDGAR Release 8.6 Filer Manual Volume II N–SAR Supplement, dated July 2003, and the EDGAR Release 8.6 OnlineForms Filer Manual Volume III, dated July 2003. All of these provisions have been incorporated by reference into the Code of Federal Regulations, which action was approved by the Director of the Federal Register in accordance with 5 U.S.C. 552(a) and 1 CFR Part 51. You must comply with these requirements in order for documents to be timely received and accepted. You can obtain paper copies of the EDGAR Filer Manual from the following address: Public Reference Room, U.S. Securities and Exchange Commission, 450 Fifth Street, NW., Washington, DC 20549–0102 or by calling Thomson Financial Inc at (800) 638–8241. Electronic format copies are available on the Commission's Web site. The address for the Filer Manual is *http://www.sec.gov/info/edgar.shtml.* You can also photocopy the document at the Office of the Federal Register, 800 North Capitol Street, NW., Suite 700, Washington, DC.

By the Commission.

Dated: July 22, 2003.

Jill M. Peterson,

Assistant Secretary.

[FR Doc. 03–19087 Filed 7–30–03; 8:45 am]

BILLING CODE 8010–01–P

[12] 15 U.S.C. 77sss.

[13] 15 U.S.C. 80a–8, 80a–29, 80a–30, and 80a–37.

DEPARTMENT OF HEALTH AND HUMAN SERVICES

Food and Drug Administration

21 CFR Part 526

Intramammary Dosage Forms; Change of Sponsor

AGENCY: Food and Drug Administration, HHS.

ACTION: Final rule.

SUMMARY: The Food and Drug Administration (FDA) is amending the animal drug regulations to reflect a change of sponsor for three approved new animal drug applications (NADAs) from Pfizer, Inc., to Schering-Plough Animal Health Corp.

DATES: This rule is effective July 31, 2003.

FOR FURTHER INFORMATION CONTACT: David R. Newkirk, Center for Veterinary Medicine (HFV–100), Food and Drug Administration, 7500 Standish Pl., Rockville, MD 20855, 301–827–6967, e-mail: *dnewkirk@cvm.fda.gov*.

SUPPLEMENTARY INFORMATION: Pfizer, Inc., 235 East 42d St., New York, NY 10017, has informed FDA that it has transferred ownership of, and all rights and interest in, the following three approved NADAs to Schering-Plough Animal Health Corp., 1095 Morris Ave., Union, NJ 07083:

NADA No.	Trade Name
55–069	ORBENIN DC (cloxacillin benzathine)
55–070	DARICLOX (cloxacillin sodium)
55–100	AMOXI–MAST (amoxicillin trihydrate)

Accordingly, the agency is amending the regulations in 21 CFR 526.88, 526.464b, and 526.464c to reflect the transfer of ownership.

This rule does not meet the definition of ''rule'' in 5 U.S.C. 804(3)(A) because it is a rule of ''particular applicability.'' Therefore, it is not subject to the congressional review requirements in 5 U.S.C. 801–808.

List of Subjects in 21 CFR Part 526

Animal drugs.

■ Therefore, under the Federal Food, Drug, and Cosmetic Act and under authority delegated to the Commissioner of Food and Drugs and redelegated to the Center for Veterinary Medicine, 21 CFR part 526 is amended as follows:

PART 526—INTRAMAMMARY DOSAGE FORMS

■ 1. The authority citation for 21 CFR part 526 continues to read as follows:

Authority: 21 U.S.C. 360b.

§ 526.88 [Amended]

■ 2. Section 526.88 *Amoxicillin trihydrate for intramammary infusion* is amended in paragraph (b) by removing ''000069'' and by adding in its place ''000061''.

§ 526.464b [Amended]

■ 3. Section 526.464b *Cloxacillin benzathine for intramammary infusion, sterile* is amended in paragraph (d) by removing ''000069'' and by adding in its place ''000061''.

§ 526.464c [Amended]

■ 4. Section 526.464c *Cloxacillin sodium for intramammary infusion, sterile* is amended in paragraph (b) by removing ''000069'' and by adding in its place ''000061''.

Dated: July 18, 2003.

Steven D. Vaughn,

Director, Office of New Animal Drug Evaluation, Center for Veterinary Medicine.

[FR Doc. 03–19445 Filed 7–30–03; 8:45 am]

BILLING CODE 4160–01–S

DEPARTMENT OF DEFENSE

Office of the Secretary

32 CFR Part 199

RIN 0720–AA79

TRICARE; Elimination of Nonavailability Statement and Referral Authorization Requirements and Elimination of Specialized Treatment Services Program

AGENCY: Office of the Secretary, DoD

ACTION: Interim final rule.

SUMMARY: This rule implements Section 735 of the National Defense Authorization Act for Fiscal Year 2002 (NDAA–02) (Public Law 107–107). It also implements Section 728 of the National Defense Authorization Act for Fiscal Year 2001 (NDAA–01) (Public Law 106–398). Section 735 of NDAA–02

eliminates the requirement for TRICARE Standard beneficiaries who live within a 40-mile radius of a military medical treatment facility (MTF) to obtain a nonavailability statement (NAS) or preauthorization from an MTF before receiving inpatient care (other than mental health services) or maternity care from a civilian provider in order that TRICARE will cost-share for such services. Further, this section eliminates the NAS requirement for specialized treatment services (STSs) for TRICARE Standard beneficiaries who live outside the 200-mile radius of a designated STS facility. This rule portrays the Department's decision to eliminate the STS program entirely. Finally, Section 728 of NDAA–01 requires that prior authorization before referral to a speciality care provider that is part of the contractor network be eliminated under any new TRICARE contract. The Department is publishing this rule as an interim final rule with comment period as an exception to our standard practice of soliciting public comments prior to issuance in order to implement the statutory requirements. Public comments, however, are invited and will be considered for possible revisions to this rule.

DATES: This rule is effective: December 28, 2003.

Comment Date: Written comments will be accepted until September 29, 2003.

ADDRESSES: Forward comments to Medical Benefits and Reimbursement Systems, TRICARE Management Activity, 16401 East Centretech Parkway, Aurora, CO 80011–9066.

FOR FURTHER INFORMATION CONTACT: Tariq Shahid, TRICARE Management Activity, telephone (303) 676–3801.

SUPPLEMENTARY INFORMATION:

I. Elimination of Nonavailability Statement Requirement and Specialized Treatment Service Program

The National Defense Authorization Act for Fiscal Year 2002 (NDAA–02) was signed into law on December 28, 2001. Section 735 of NDAA–02 amends Section 721 of the NDAA–01 with respect to the nonavailability statement (NAS) elimination requirements and eliminates the requirement for non-enrolled TRICARE beneficiaries who live within a 40-mile radius of a military medical treatment facility (MTF) to obtain an NAS or preauthorization from an MTF before receiving nonemergent inpatient or obstetrical (inpatient or outpatient) services from a civilian provider in order that TRICARE will cost-share for such services. A non-enrolled TRICARE beneficiary is a beneficiary who has not enrolled in TRICARE Prime, but who has chosen to use the TRICARE Standard and TRICARE Extra options. Section 735 retains MTF NAS authority for inpatient mental health services within the usual 40-mile catchment area. The section establishes that the NAS elimination requirements are to take effect on the earlier of the date the health care services are provided under new TRICARE contracts or the date that is two years after the date of the enactment of NDAA–02. As the health care services under new TRICARE contracts will not be available until after March 2004, the NAS requirements will be eliminated for admissions occurring on or after December 28, 2003, which is the date that is two years after the date of enactment of NDAA–02. For obstetrical care, the NAS requirement will be eliminated for maternity episodes wherein the first prenatal visit occurs on or after December 28, 2003. An NAS is required when the first prenatal visit occurs before December 28, 2003, by 10 U.S.C. 1080(b). The NAS for inpatient mental health care will continue to be required.

With the exception of maternity care, Section 735 of NDAA–02 gives the Secretary of DoD the authority to waive the NAS elimination requirements if: (a) Significant costs would be avoided by performing specific procedures at the affected military treatment facility (MTF); (b) a specific procedure must be provided at the affected MTF to ensure the proficiency levels of the practitioners at the facility; or (c) the lack of NAS data would significantly interfere with TRICARE contract administration. When this waiver authority will be exercised, the Department will notify the affected beneficiaries by publishing a notice in the **Federal Register** and notify the Congress.

Section 735 of NDAA–02 furthermore eliminates the multi-regional and national NAS requirement for specialized treatment services (STSs) for TRICARE Standard beneficiaries who live outside the 200-mile radius of a STS facility STS facilities are those designated facilities with regional, multi-regional or national catchment areas which provide complex medical and surgical services as currently provided in 32 CFR 199.4(a)(10). Since the Department has decided to terminate the STS program no later than June 1, 2003, all regional, multi-regional, and national NAS requirements for STSs will be eliminated before that date. The rationale behind the termination of the STS program is that this program was not based upon nationally developed consensus or evidenced-based criteria for clinical quality (there were none at the inception of this program) and had not consistently demonstrated cost-benefit to the government. In addition, the NAS requirement for STSs has placed an unreasonable burden on our beneficiaries who have had to travel extended distances to the STS facilities. This would provide for enhanced continuity of care for TRICARE Standard beneficiaries who generally receive most medical and surgical services from civilian providers of their choice. This rule gives notice of the Department's decision to terminate the STS program entirely no later than June 1, 2003.

II. Elimination of Prior Authorization Before Referrals to Specialty Care Providers

This rule will implement Section 728 of the National Defense Authorization Act for Fiscal Year 2001 (NDAA–01) (Pub. L. 106–398) which was enacted on October 30, 2000. Section 728 requires that prior authorization (or more precisely, preauthorization as defined in 32 CFR 199.2(b)) before referral to a specialty care provider that is part of the network be eliminated as part of any new TRICARE contracts entered into by the Department of Defense after the date of the enactment of the Act. This means that medical necessity preauthorization will not be required when primary care or specialty care providers refer TRICARE Prime patients for consultation appointment services, which are provided within the contractors' network of providers. Only TRICARE Prime patients require preauthorization for obtaining consultation appointment services. TRICARE Prime beneficiaries are required to use network providers if available. This rule removes the requirement to obtain a medical necessity determination when the consultation services are provided within the contractor's network. Section 728 of NDAA–01 does not eliminate the requirement for medical necessity preauthorizations for specific procedures or other health care services which specialty providers may recommend for beneficiaries as a result of the original consultation appointment or the need for preauthorization referral to non-network providers. For example, a consultation might result in a recommendation for a high cost surgical procedure on a nonemergent basis. The specialist's intent to perform this procedure may still be subjected to medical necessity preauthorization based upon utilization review criteria as

has been TRICARE policy for years in conformance with the peer review organization program in section 199.15.

In summary, under new TRICARE contracts, requests for consultation appointment services will not be subjected to medical necessity preauthorization though other health care services may continue to require preauthorization. TRICARE contractors may determine which other categories of health care services (procedures, nonemergent admissions) will require medical necessity preauthorization in accordance with their best business practices.

Regulatory Procedure

Executive Order 12866 requires certain regulatory assessments for any significant regulatory action, defined as one which would result in an annual effect on the economy of $100 million or more, or have other substantial impacts. The Regulatory Flexibility Act (RFA) requires that each Federal agency prepare, and make available for public comment, a regulatory flexibility analysis when the agency issues a regulation which would have significant impact on a substantial number of small entities.

This rule is not a significant regulatory action under E.O. 12866 that could potentially add more than $100 million in estimated annual costs for DoD. This rule does not require a regulatory flexibility analysis as the policy action was taken by Congress and the rule merely puts it into effect. The policy of the Regulatory Flexibility Act that agencies adequately evaluate all potential options for an action does not apply when Congress has already dictated the action.

This rule will not impose significant additional information collection requirements on the public under the Paperwork Reduction Act of 1995 (44 U.S.C. 3501–3511).

This rule is being issued as an interim final rule, with comment period, as an exception to our standard practice of soliciting public comments prior to issuance. This is because there is no discretion being exercised. The NDAA–02 (Pub. L. 107–107) mandated elimination of the NAS for maternity care entirely, and for inpatient care unless it met very restrictive criteria, and there is no discretion on the effective data. The Assistant Secretary of Defense (Health Affairs) has determined that following the standard practice in this case would be unnecessary, impractical, and contrary to the public interest.

Public comments are invited. All comments will be carefully considered. A discussion of the major issues received by public comments will be included with the issuance of the final rule.

List of Subjects in 32 CFR Part 199

Claims, Dental health, Health care, Health insurance, Individuals with disabilities, Military personnel.

■ Accordingly, 32 CFR part 199 is amended as follows:

PART 199—[AMENDED]

■ 1. The authority citation for part 199 continues to read as follows:

Authority: 5 U.S.C. 301; and 10 U.S.C. Chapter 55.

■ 2. Section 199.2(b) is amended by revising the definition for ''Preauthorization,'' by removing the definition for ''Specialized Treatment Service Facility,'' and by adding the definitions for ''Consultation appointment'' and ''Medically or psychologically necessary preauthorization'' and placing them in alphabetical order to read as follows:

§ 199.2 Definitions.

* * * * *

(b) * * *

* * * * *

Consultation appointment. An appointment for evaluation of medical symptoms resulting in a plan for management which may include elements of further evaluation, treatment and follow-up evaluation. Such an appointment does not include surgical intervention or other invasive diagnostic or therapeutic procedures beyond the level of very simply office procedures, or basic laboratory work but rather provides the beneficiary with an authoritative opinion.

* * * * *

Medically or psychologically necessary preauthorization: A pre (or prior) authorization for payment for medical/surgical or psychological services based upon criteria that are generally accepted by qualified professionals to be reasonable for diagnosis and treatment of an illness, injury, pregnancy, and mental disorder.

* * * * *

Preauthorization. A decision issued in writing, or electronically by the Director, TRICARE Management Activity, or a designee, that TRICARE benefits are payable for certain services that a beneficiary has not yet received. The term prior authorization is commonly substituted for preauthorization and has the same meaning.

* * * * *

■ 3. Section 199.4 is amended by revising paragraphs (a)(9) and (a)(9)(i)(B), by removing paragraph (a)(9)(i)(C), by revising paragraph (a)(9)(iv). by adding a new paragraph (a)(9)(vii), by removing and reserving paragraph (a)(10), and by revising paragraphs (e)(16)(i) and (e)(16)(ii) to read as follows:

§ 199.4 Basic program benefits.

(a) * * *

(9) *Nonavailability Statements within a 40-mile catchment area.* In some geographic locations, it is necessary for CHAMPUS beneficiaries not enrolled in TRICARE Prime to determine whether the required inpatient mental health care can be provided through a Uniformed Service facility. If the required care cannot be provided, the hospital commander, or a designee, will issue a Nonavailability Statement (NAS) (DD Form 1251). Except for emergencies, as NAS should be issued before inpatient mental health care is obtained from a civilian source. Failure to secure such a statement may waive the beneficiary's rights to benefits under CHAMPUS/TRICARE.

(i) * * *

(B) For CHAMPUS beneficiaries who are not enrolled in TRICARE Prime, an NAS is required for services in connection with nonemergency hospital inpatient mental health care if such services are available at a military treatment facility (MTF) located within a 40-mile radius of the residence of the beneficiary, except that a NAS is not required for services otherwise available at an MTF located within a 40-mile radius of the beneficiary's residence when another insurance plan or program provides the beneficiary's primary coverage for the services. This requirement for an NAS does not apply to beneficiaries enrolled in TRICARE Prime, even when those beneficiaries use the point-of-service option under § 199.17(n)(3).

* * * * *

(iv) *Nonavailability Statement (DD Form 1251) must be filed with applicable claim.* When a claim is submitted for TRICARE benefits that includes services for which an NAS was issued, a valid NAS authorization must be on the DoD required system.

* * * * *

(vii) With the exception of maternity services, the Assistant Secretary of Defense for Health Affairs (ASD(HA)) may require an NAS prior to TRICARE cost-sharing for additional services from civilian sources if such services are to be provided to a beneficiary who lives within a 40-mile catchment area of an

MTF where such services are available and the ASD(HA):

(A) Demonstrates that significant costs would be avoided by performing specific procedures at the affected MTF or MTFs; or

(B) Determines that a specific procedure must be provided at the affected MTF or MTFs to ensure the proficiency levels of the practitioners at the MTF or MTFs; or

(C) Determines that the lack of NAS data would significantly interfere with TRICARE contract administration; and

(D) Provides notification of the ASD(HA)'s intent to require an NAS under this authority to covered beneficiaries who receive care at the MTF or MTFs that will be affected by the decision to require an NAS under this authority; and

(E) Provides at least 60-day notification to the Committees on Armed Services of the House of Representatives and the Senate of the ASD(HA)'s intent to require an NAS under this authority, the reason for the NAS requirement, and the date that an NAS will be required.

(10) [Reserved].

* * * * *

(e) * * *

(16) * * *

(i) *Benefit.* The CHAMPUS Basic Program may share the cost of medically necessary services and supplies associated with maternity care which are not otherwise excluded by this part.

(ii) *Cost-share.* Maternity care cost-share shall be determined as follows:

* * * * *

■ 4. Section 199.7 is amended by revising paragraph (a)(7)(i) to read as follows:

§ 199.7 Claims Submission, Review, and Payment

(a) * * *

(7) * * *

(i) *Rules applicable to issuance of Nonavailability Statement.* The ASD(HA) may issue a DoD Instruction to prescribe rules for the issuance of Nonavailability Statement.

* * * * *

■ 5. Section 199.15 is amended by revising paragraph (b)(4)(i) and by adding a new paragraph (b)(4)(ii)(D) to read as follows:

§ 199.15 Quality and Utilization Review Peer Review Organization Program

* * * * *

(b) * * *

(4) * * *

(i) *In general.* all health care services for which payment is sought under TRICARE are subject to review for appropriateness of utilization as determined by the Director, TRICARE Management Activity, or a designee.

(A) The procedures for this review may be prospective (before the care is provided), concurrent (while the care is in process), or retrospective (after the care has been provided). Regardless of the procedures of this utilization review, the same generally accepted standards, norms and criteria for evaluating the medical necessity, appropriateness and reasonableness of the care involved shall apply. The Director, TRICARE Management Activity, or a designee, shall establish procedures for conducting reviews, including types of health care services for which preauthorization or concurrent review shall be required. Preauthorization or concurrent review may be required for categories of health care services. Except where required by law, the categories of health care services for which preauthorization or concurrent review is required may vary in different geographical locations or for different types of providers.

(B) For healthcare services provided under TRICARE contracts entered into by the Department of Defense after October 30, 2000, medical necessity preauthorization will not be required for referrals for specialty consultation appointment services required by primary care providers or specialty providers when referring TRICARE Prime beneficiaries for specialty consultation appointment services within the TRICARE contractor's network. However, the lack of medical necessity preauthorization requirements for consultative appointment services does not mean that non-emergent admissions or invasive diagnostic or therapeutic procedures which in and of themselves constitute categories of health care services related to, but beyond the level of the consultation appointment service, are also not subject to medical necessity prior authorization. In fact many such health care services may continue to require medical necessity prior authorization as determined by the Director, TRICARE Management Activity, or a designee. TRICARE Prime beneficiaries are also required to obtain preauthorization before seeking health care services from a non-network provider.

(ii) * * *

(D) For healthcare services provided under TRICARE contracts entered into by the Department of Defense after October 30, 2000, medical necessity preauthorization for specialty consultation appointment services within the TRICARE contractor's network will not be required. However TRICARE contractors shall determine, based upon best-business practice, utility and cost-savings, the categories of other health care services which are best served by medical necessity prior (or pre) authorization and may request a waiver from the Director, TRICARE Management Activity, or designee, from compliance with previously established requirements for medical necessity prior (or pre) authorization.

* * * * *

■ 6. Section 199.17 is amended by revising paragraph (n)(2)(ii) to read as follows:

§ 199.17 TRICARE Program

* * * * *

(n) * * *

(2) * * * (ii) For any necessary specialty care and nonemergent inpatient care, the primary care manager or the Health Care Finder will assist in making an appropriate referral.

(A) For healthcare services provided under managed care support contracts entered into by the Department of Defense before October 30, 2000, all such nonemergency specialty care and inpatient care must be preauthorized by the primary care manager or the Health Care Finder.

(B) For healthcare services provided under TRICARE contracts entered into by the Department of Defense on or after October 30, 2000, referral requests (consultation requests) for specialty care consultation appointment services for TRICARE Prime beneficiaries must be submitted by primary care managers. Such referrals will be authorized by Health Care Finders (authorizations numbers will be assigned so as to facilitate claims processing) but medical necessity preauthorization will not be required by referral consultation appointment services within the TRICARE contractor's network. Some health care services subsequent to consultation appointments (invasive procedures, nonemergent admissions and other health care services as determined by the Director, TRICARE Management Activity, or a designee) will require medical necessity preauthorization. Though referrals for specialty care are generally the responsibility of the primary care managers, subject to discretion exercised by the regional Lead Agents, and established in regional policy or memoranda of understanding, specialist providers may be permitted to refer patients for additional specialty consultation appointment services within the TRICARE contractor's network without prior authorization by primary care managers or subject to medical necessity preauthorization.

* * * * *

Dated: July 24, 2003.

L.M. Bynum,

Alternate OSD Federal Register Liaison Officer, Department of Defense.

[FR Doc. 03–19452 Filed 7–30–03; 8:45 am]

BILLING CODE 5001–08–M

DEPARTMENT OF DEFENSE

Office of the Secretary

32 CFR Part 199

RIN–0720–AA72

TRICARE Program; Waiver of Certain TRICARE Deductibles; Clarification of TRICARE Prime Enrollment Period; Enrollment in TRICARE Prime Remote for Active Duty Family Members

AGENCY: Office of the Secretary, DoD.

ACTION: Interim final rule.

SUMMARY: A proposed rule to implement section 714 of the National Defense Authorization Act (NDAA) for Fiscal Year 2000 was published on April 18, 2002 (67 FR 19141) to authorize the Secretary of Defense to waive the TRICARE deductible in certain cases for care provided to a dependent of a member of a Reserve Component or the National Guard who is called to active duty for more than 30 days but less than one year. The proposed rule also established circumstances under which eligible beneficiaries may enroll in TRICARE Prime for a period of less than one year. The proposed rule is withdrawn and instead is implemented along with section 702 of the NDAA for FY 2003, which establishes circumstances under which dependents of Reserve Component and National Guard members called to active duty in support of contingency operations may enroll in TRICARE Prime Remote for Active Duty Family Members, and dependents of TRICARE Prime Remote service members who are enrolled in TRICARE Prime Remote for Active Duty Family Members may remain enrolled when the service member receives orders for an unaccompanied follow-on assignment. This interim final rule authorizes the Secretary of Defense to waive the TRICARE deductible in certain cases for care provided to a dependent of a member of a Reserve Component or the National Guard who is called to active duty for more than 30 days but less than 1 year. It establishes circumstances under which eligible beneficiaries may enroll in TRICARE Prime for a period of less than 1 year.

EFFECTIVE DATE: This interim final rule is effective September 29, 2003.

ADDRESSES: TRICARE Management Activity (TMA), Medical Benefits and Reimbursement Systems, 16401 East Centretech Parkway, Aurora, CO 80011–9043.

FOR FURTHER INFORMATION CONTACT: Stephen E. Isaacson, Medical Benefits and Reimbursement Systems, TMA, (303) 676–3572.

SUPPLEMENTARY INFORMATION:

I. Summary of Interim Final Rule Provisions

The reader should refer to the proposed rule that was published on April 18, 2002, (67 FR 19141) for more detailed information regarding these changes. This interim final rule describes the circumstances under which eligible dependents of active duty members, and eligible dependents of Reserve Component and National Guard members called to active duty in support of contingency operations may enroll in TRICARE Prime Remote for Active Duty Family Members. In addition, this interim rule describes the circumstances under which eligible dependents of TRICARE Prime Remote service members who are enrolled in the TRICARE Prime Remote for Active Duty Family Member program may remain enrolled when the service member receives a follow-on accompanied assignment and the dependents continue to reside in the TRICARE Prime Remote location.

Changes to the provisions for TRICARE Prime Remote for Active Duty Family Members (TPRADFM) are required by Section 702 of P.L. 107–314 (the NDAA for FY 2003). First, family members who are enrolled in TPRADFM may continue their enrollment when the member has relocated without the family members pursuant to orders for a permanent change of duty station, if the orders do not authorize dependents to accompany the member to the new duty station at the expense of the United States, and if the family members continue to reside at the same location at which they were enrolled in TPRADFM. Second, family members of a reserve component member ordered to active duty for a period of more than 30 days may enroll in TPRADFM if they reside with the member and if the residence is more than fifty (50) miles, or approximately one hour driving time, from the nearest military medical treatment facility adequate to provide the needed care.

The changes related to TPRADFM were not included in the original proposed rule, but, since they are statutorily required and also require a change to a paragraph of 32 CFR Part 199.17 that was being revised pursuant to the proposed rule, we are including all of the changes in this interim final rule.

II. Public Comments

We provided a 60-day comment period on the proposed rule. We received no public comments.

III. Changes in the Interim Final Rule

In both paragraph (f)(2)(i)(H) of Section 199.4 and paragraph (o)(2) of Section 199.17, we have clarified that these provisions apply only to members of the National Guard who are ordered to federal active duty under authority of the President and not to those members who are ordered to active duty under the authority of a governor of a state. In addition, in paragraph (f)(2)(i)(H) of Section 199.4, we have changed ''the Secretary of Defense, or a designee,'' to ''the Director, TRICARE Management Activity'' as the authority to waive the annual fiscal year deductible. This is only a wording change and not a substantive change, since the Secretary of Defense, through 32 CFR 199.1(c)(2) and 32 CFR part 367, has delegated authority to the Assistant Secretary of Defense (Health Affairs), who has delegated authority to the Director, TRICARE Management Activity, to provide policy guidance, management control, and coordination as required by CHAMPUS.

The proposed rule would have established in the regulation an administrative authority for Reservists and members of the National Guard who are called or ordered to active duty for a period of 179 days or more to enroll in TRICARE Prime. We are changing that provision in this interim final rule.

Reserve components (including both reservists and members of the National Guard) participate in military conflicts and peacekeeping missions in areas such as Bosnia, Kosovo, and southwest Asia, and assist in homeland security. The operational tempo following the events of September 11, 2001, showed a dramatic increase in the number of reservists activated for these requirements. These reservists receive varying levels of medical benefits according to their primary residence location, length of call up, and type of activation order. For example, the Department established a demonstration in order to ease the burden imposed on the large number of reserve component members who have been activated in response to September 11 under Operations Noble Eagle and Enduring Freedom (66 FR 55928). This demonstration which is called the TRICARE Reserve Family Member

Demonstration Project (TRFMDP) provides three enhancements to the TRICARE Standard benefit for their family members: the annual deductible was waived, the requirement to obtain a non-availability statement was waived, and TRICARE will pay up to fifteen percent above the TRICARE maximum allowable charge for services received from nonparticipating providers. However, the demonstration is due to expire on November 1, 2003, although large numbers of individuals continue to be activated. In addition, family members of reserve component members who are activated under other authorities do not receive these enhanced benefits.

In order to eliminate these discrepancies while continuing to provide some enhanced benefits to family members of activated reserve component members, the Department has authorized family members of activated reserve component members who live in military treatment facility catchment areas to enroll in TRICARE Prime if the member is activated for more than 30 days rather than for 179 days or more. A catchment area is established by zip codes, but is generally a home residence within 50 miles, or approximately one hour driving time, from the nearest military treatment facility adequate to provide care. This change accomplishes three goals. First, it provides family members of these activated reserve component members with substantially the same benefits available to family members of activated reserve component members under the TRFMDP. Second, it provides these family members with the same benefits available to family members who live outside catchment areas under the TPRADFM through the provisions of Section 702 of P.L. 107–314. Third, it ensures that the medical benefits available to family members of activated reservists are as similar as possible to those available to family members of active duty members.

This interim final rule establishes specific regulatory authority for this provision.

IV. Regulatory Procedures

Executive Order 12866 requires that a regulatory impact analysis be performed on any major rule. A ''major rule'' is defined as one that would result in the annual effect on the national economy of $100 million or more, or have other substantial impact. The Regulatory Flexibility Act (RFA) requires that each Federal Agency prepare, and make available for public comment, a regulatory flexibility analysis when the agency issues regulations which would have a significant impact on a substantial number of small entities.

This interim final rule is not major rule under the Congressional Review Act. The changes set forth in this interim final rule are minor revisions to existing regulation. The changes made in this interim final rule involve an expansion of TRICARE benefits. In addition, this interim final rule will have minor impact and will not significantly affect a substantial number of small entities. In light of the above, no regulatory impact analysis is required.

This rule has been designated as significant and has been reviewed by the Office Management and Budget as required under the provisions of E.O. 12866.

This interim final rule will not impose additional information collection requirements on the public under the Paperwork Reduction Act of 1995 (44 U.S.C. Chapter 55).

List of Subjects in 32 CFR Part 199

Claims, handicapped, health insurance, and military personnel.

PART 199—[AMENDED]

■ 1. The authority citation for part 199 continues to read as follows:

Authority: 5 U.S.C. 301; 10 U.S.C. Chapter 55.

■ 2. Section 199.4 is amended by adding a new paragraph (f)(2)(i)(H) as follows:

§ 199.4 Basic program benefits.

(f) * * *

(2) * * *

(i) * * *

(H) The Director, TRICARE Management Activity, may waive the annual individual or family fiscal year deductible for dependents of a Reserve Component member who is called or ordered to active duty for a period of more than 30 days but less than one year or a National guard member who is called or ordered to full-time federal National guard duty for a period of more than 30 days but less than one year, in support of a contingency operation (as defined in 10 U.S.C. 101(a)(13)). For purposes of this paragraph, a dependent is a lawful husband or wife of the member and a child as defined in paragraphs (b)(2)(ii)(A) through (F) and (b)(2)(ii)(H)(*1*), (*2*) and (*4*) of Part 199.3.

* * * * *

■ 3. Section 199.17 is amended by revising paragraphs (g)(3), (o) and (o)(2) as follows:

§ 199.17 TRICARE Program.

(g) * * *

(3) Eligibility.

(i) An active duty family member is eligible for TRICARE Prime Remote for Active Duty Family Members if he or she is eligible for CHAMPUS and, on or after December 2, 2003 meets the criteria of either (g)(3)(i)(A) and (B), or (g)(3)(i)(C):

(A) The family member's active duty sponsor has been assigned permanent duty as a recruiter; as an instructor at an educational institution, an administrator of a program, or to provide administrative services in support of a program of instruction for the Reserve Officers' Training Corps; as a full-time adviser to a unit of a reserve component; or any other permanent duty designated by the Director, TRICARE Management Activity that the Director determines is more than 50 miles, or approximately one hour driving time, from the nearest military treatment facility that is adequate to provide care.

(B) The family members and active duty sponsor, pursuant to the assignment of duty described in paragraph (g)(3)(i)(A) of this section, reside at a location designed by the Director, TRICARE Management Activity, that the Director determines is more than 50 miles, or approximately one hour driving time, from the nearest military medical treatment facility that is adequate to provide care.

(c) The family member, having resided together with the active duty sponsor while the sponsor served in an assignment described in (g)(3)(i)(A), continues to reside at the same location after the sponsor relocates without the family member pursuant to orders for a permanent change of duty station, and the orders do not authorize dependents to accompany the sponsor to the new duty station at the expense of the United States.

(ii) A family member who is a dependent of a reserve component member is eligible for TRICARE Prime Remote for Active Duty Family members if he or she is eligible for CHAMPUS and meets all of the following additional criteria:

(A) The reserve component member has been ordered to active duty for a period of more than 30 days.

(B) The family member resides with the member.

(C) The Director, TRICARE Management Activity, determines the residence of the reserve component member is more than 50 miles, or approximately one hour driving time, from the nearest military medical treatment facility that is adequate to provide care.

(D) ''Resides with'' is defined as the TRICARE Prime Remote residence

address at which the family resides with the activated reservist upon activation.

* * * * *

(o) TRICARE program enrollment procedures. There are certain requirements pertaining to procedures for enrollment in Prime and TRICARE Prime Remote for Active Duty Family Members. (These procedures do not apply to active duty members, whose enrollment is mandatory).

(1) * * *

(2) Enrollment period. The following provisions apply to enrollment periods on or after March 10, 2003.

(i) Beneficiaries who select the TRICARE Prime option or the TRICARE Prime Remote for Active Duty Family Members option remain enrolled for 12 months increments until: they take action to disenroll; they are no longer eligible for enrollment in TRICARE Prime or TRICARE Prime Remote for Active Duty Family Members; or they are disenrolled for failure to pay required enrollment fees if applicable. For those who remain eligible for TRICARE Prime enrollment, no later than 15 days before the expiration date of an enrollment, the sponsor will be sent a written notification of the pending expiration and renewal of the TRICARE Prime enrollment. TRICARE Prime enrollments shall be automatically renewed upon the expiration of the enrollment unless the renewal is declined by the sponsor. Termination of enrollment for failure to pay enrollment fees is addressed in paragraph (o)(3) of this section.

(ii) Exceptions to the 12-month enrollment period.

(A) Beneficiaries who are eligible to enroll in TRICARE Prime but have less than one year of TRICARE eligibility remaining.

(B) The dependents of a reservist who is called or ordered to active duty or of a member of the National Guard who is called or ordered to full-time federal National Guard duty for a period of more than 30 days.

* * * * *

Dated: July 24, 2003.

L.M. Bynum,

Alternate OSD Federal Register Liaison Officer, Department of Defense.

[FR Doc. 03–19453 Filed 7–30–03; 8:45 am]

BILLING CODE 5001–08–M

DEPARTMENT OF HOMELAND SECURITY

Coast Guard

33 CFR Part 100

[CGD05–03–105]

RIN 1625–AA08

Special Local Regulations for Marine Events; Patapsco River, Baltimore, MD

AGENCY: Coast Guard, DHS.

ACTION: Notice of implementation of regulation.

SUMMARY: The Coast Guard is implementing the special local regulations at 33 CFR 100.515 during the 189th Defender's Day Celebration fireworks display to be held September 13, 2003, over the waters of the Patapsco River at Baltimore, Maryland. These special local regulations are necessary to control vessel traffic due to the confined nature of the waterway and expected vessel congestion during the fireworks display. The effect will be to restrict general navigation in the regulated area for the safety of spectators and vessels transiting the event area.

EFFECTIVE DATE: 33 CFR 100.515 is effective from 5:30 p.m. to 11 p.m. on September 13, 2003.

FOR FURTHER INFORMATION CONTACT: Ronald Houck, Marine Information Specialist, Commander, Coast Guard Activities Baltimore, 2401 Hawkins Point Road, Baltimore, MD 21226–1971, at (410) 576–2674.

SUPPLEMENTARY INFORMATION: The City of Baltimore will sponsor the 189th Defender's Day Celebration fireworks display on September 13, 2003 over the waters of the Patapsco River, Baltimore, Maryland. The fireworks display will be launched from a barge positioned within the regulated area. A fleet of spectator vessels is expected to gather nearby to view the aerial display. In order to ensure the safety of spectators and transiting vessels, 33 CFR 100.515 will be in effect for the duration of the event. Under provisions of 33 CFR 100.515, a vessel may not enter the regulated area unless it receives permission from the Coast Guard Patrol Commander. Spectator vessels may anchor outside the regulated area but may not block a navigable channel.

In addition to this notice, the maritime community will be provided extensive advance notification via the Local Notice to Mariners, marine information broadcasts, and area newspapers, so mariners can adjust their plans accordingly.

Dated: July 22, 2003.

Sally Brice-O'Hara,

Rear Admiral, Coast Guard, Commander, Fifth Coast Guard District.

[FR Doc. 03–19497 Filed 7–30–03; 8:45 am]

BILLING CODE 4910–15–P

DEPARTMENT OF HOMELAND SECURITY

Coast Guard

33 CFR Part 100

[CGD05–03–101]

RIN 1625–AA08

Special Local Regulations for Marine Events; Atlantic Ocean, Point Pleasant Beach to Bay Head, NJ

AGENCY: Coast Guard, DHS.

ACTION: Temporary final rule.

SUMMARY: The Coast Guard is establishing temporary special local regulations for the ''Point Pleasant OPA/NJ Offshore Grand Prix'', a marine event to be held on the waters of the Atlantic Ocean between Point Pleasant Beach and Bay Head, New Jersey. These special local regulations are necessary to provide for the safety of life on navigable waters during the event. This action is intended to restrict vessel traffic in the regulated area during the event.

DATES: This rule is effective from 9:30 a.m. to 3:30 p.m. on August 15, 2003.

ADDRESSES: Documents indicated in this preamble as being available in the docket, are part of docket CGD05–03–101 and are available for inspection or copying at Commander (oax), Fifth Coast Guard District, 431 Crawford Street, Portsmouth, Virginia 23704–5004, between 9 a.m. and 2 p.m., Monday through Friday, except Federal holidays.

FOR FURTHER INFORMATION CONTACT: S. L. Phillips, Project Manager, Auxiliary and Recreational Boating Safety Branch, at (757) 398–6204.

SUPPLEMENTARY INFORMATION:

Regulatory Information

We did not publish a notice of proposed rulemaking (NPRM) for this regulation. Under 5 U.S.C. 553(b)(B) the Coast Guard finds that good cause exists for not publishing an NPRM. Publishing an NPRM would be impracticable. The event will take place on August 15, 2003. There is not sufficient time to allow for a notice and comment period prior to the event.

Under 5 U.S.C. 553(d)(3), the Coast Guard finds that good cause exists for

making this rule effective less than 30 days after publication in the **Federal Register**. Delaying the effective date would be contrary to the public interest, since immediate action is needed to ensure the safety of the event participants, spectator craft and other vessels transiting the event area. However, advance notifications will be made to affected users of the waterway via marine information broadcasts and area newspapers.

Background and Purpose

On August 15, 2003, the Offshore Performance Association and the New Jersey Offshore Racing Association will sponsor the ''Point Pleasant OPA/NJ Offshore Grand Prix''. The event will consist of approximately 35 offshore powerboats racing along an oval course on the waters of the Atlantic Ocean. A fleet of approximately 200 spectator vessels is expected to gather near the event site to view the competition. To provide for the safety of participants, spectators and other transiting vessels, the Coast Guard will temporarily restrict vessel traffic in the event area during the races.

Discussion of Rule

The Coast Guard is establishing temporary special local regulations on specified waters of the Atlantic Ocean and the Manasquan River. The temporary special local regulations will be in effect from 9:30 a.m. until 3:30 p.m. on August 15, 2003. The effect will be to restrict general navigation in the regulated area during the event. Except for persons or vessels authorized by the Coast Guard Patrol Commander, no person or vessel may enter or remain in the regulated area. The Patrol Commander will allow non-participants to transit the regulated area between races. These regulations are needed to control vessel traffic during the event to enhance the safety of participants, spectators and transiting vessels.

Regulatory Evaluation

This rule is not a ''significant regulatory action'' under section 3(f) of Executive Order 12866, Regulatory Planning and Review, and does not require an assessment of potential costs and benefits under section 6(a)(3) of that Order. The Office of Management and Budget has not reviewed it under that Order. It is not ''significant'' under the regulatory policies and procedures of the Department of Homeland Security (DHS).

We expect the economic impact of this temporary final rule to be so minimal that a full Regulatory Evaluation under the regulatory policies and procedures of DHS is unnecessary.

Although this regulation prevents traffic from transiting a portion of the Atlantic Ocean and Manasquan River during the event, the effect of this regulation will not be significant due to the limited duration that the regulated area will be in effect and the extensive advance notifications that will be made to the maritime community via marine information broadcasts and area newspapers so mariners can adjust their plans accordingly. Additionally, vessel traffic will be allowed to transit through the regulated area between races.

Small Entities

Under the Regulatory Flexibility Act (5 U.S.C. 601–612), we considered whether this rule would have a significant economic impact on a substantial number of small entities. The term ''small entities'' comprises small businesses, not-for-profit organizations that are independently owned and operated and are not dominant in their fields, and governmental jurisdictions with populations of less than 50,000.

The Coast Guard certifies under 5 U.S.C. 605(b) that this rule will not have a significant economic impact on a substantial number of small entities. This rule will affect the following entities, some of which may be small entities: the owners or operators of vessels intending to transit or anchor in the effected portions of the Atlantic Ocean and Manasquan River during the event.

This rule will not have a significant economic impact on a substantial number of small entities for the following reasons. This rule will be in effect for only a short period, from 9:30 a.m. to 3:30 p.m. on August 15, 2003. Vessel traffic will be allowed to transit the regulated area between races, when the Patrol Commander determines it is safe to do so. Before the enforcement period, we will issue maritime advisories so mariners can adjust their plans accordingly.

Assistance for Small Entities

Under section 213(a) of the Small Business Regulatory Enforcement Fairness Act of 1996 (Pub. L. 104–121), we want to assist small entities in understanding this temporary rule so that they can better evaluate its effects on them and participate in the rulemaking. If the rule would affect your small business, organization, or governmental jurisdiction and you have questions concerning its provisions or options for compliance, please contact the address listed under **ADDRESSES.**

Small businesses may send comments on the actions of Federal employees who enforce, or otherwise determine compliance with, Federal regulations to the Small Business and Agriculture Regulatory Enforcement Ombudsman and the Regional Small Business Regulatory Fairness Boards. The Ombudsman evaluates these actions annually and rates each agency's responsiveness to small business. If you wish to comment on actions by employees of the Coast Guard, call 1–888–REG–FAIR (1–888–734–3247).

Collection of Information

This rule calls for no new collection of information under the Paperwork Reduction Act of 1995 (44 U.S.C. 3501–3520).

Federalism

A rule has implications for federalism under Executive Order 13132, Federalism, if it has a substantial direct effect on State or local governments and would either preempt State law or impose a substantial direct cost of compliance on them. We have analyzed this rule under that Order and have determined that it does not have implications for federalism.

Unfunded Mandates Reform Act

The Unfunded Mandates Reform Act of 1995 (2 U.S.C. 1531–1538) requires Federal agencies to assess the effects of their discretionary regulatory actions. In particular, the Act addresses actions that may result in the expenditure by a State, local, or tribal government, in the aggregate, or by the private sector of $100,000,000 or more in any one year. Though this rule will not result in such an expenditure, we do discuss the effects of this rule elsewhere in this preamble.

Taking of Private Property

This rule will not effect a taking of private property or otherwise have taking implications under Executive Order 12630, Governmental Actions and Interference with Constitutionally Protected Property Rights.

Civil Justice Reform

This rule meets applicable standards in sections 3(a) and 3(b)(2) of Executive Order 12988, Civil Justice Reform, to minimize litigation, eliminate ambiguity, and reduce burden.

Protection of Children

We have analyzed this rule under Executive Order 13045, Protection of Children from Environmental Health Risks and Safety Risks. This rule is not an economically significant rule and

will not create an environmental risk to health or risk to safety that might disproportionately affect children.

Indian Tribal Governments

This rule does not have tribal implications under Executive Order 13175, Consultation and Coordination with Indian Tribal Governments, because it does not have a substantial and direct effect on one or more Indian tribes, on the relationship between the Federal Governments and Indian tribes, or on the distribution of power and responsibilities between the Federal Government and Indian tribes.

Energy Effects

We have analyzed this rule under Executive Order 13211, Actions Concerning Regulations That Significantly Affect Energy Supply, Distribution, or Use. We have determined that it is not a ''significant regulatory action'' under Executive Order 12866 and is not likely to have a significant adverse effect on the supply, distribution, or use of energy. It has not been designated by the Administrator of the Office of Information and Regulatory Affairs as a significant energy action. Therefore, it does not require a Statement of Energy Effects under Executive Order 13211.

Environment

We have analyzed this rule under Commandant Instruction M16475.1D, which guides the Coast Guard in complying with the National Environmental Policy Act of 1969 (NEPA) (42 U.S.C. 4321–4370f), and have concluded that there are no factors in this case that would limit the use of a categorical exclusion under section 2.B.2 of the Instruction. Therefore, this rule is categorically excluded under figure 2–1, paragraph (34)(h), of the Instruction, from further environmental documentation. Special local regulations issued in conjunction with a regatta or marine parade permit are specifically excluded from further analysis and documentation under those sections. Under figure 2–1, paragraph (34)(h), of the Instruction, an ''Environmental Analysis Check List'' and a ''Categorical Exclusion Determination'' are not required for this rule.

List of Subjects in 33 CFR Part 100

Marine Safety, Navigation (water), Reporting and recordkeeping requirements, Waterways.

■ For the reasons discussed in the preamble, the Coast Guard amends 33 CFR Part 100 as follows:

PART 100—SAFETY OF LIFE ON NAVIGABLE WATERS

■ 1. The authority citation for part 100 continues to read as follows:

Authority: 33 U.S.C. 1233 through 1236; Department of Homeland Security Delegation No. 0170.1, 33 CFR 100.35.

■ 2. Add a temporary § 100.35–T05–101 to read as follows:

§ 100.35–T05–101 Atlantic Ocean, Point Pleasant Beach to Bay Head, New Jersey.

(a) *Definitions.*

(1) *Coast Guard Patrol Commander.* The Coast Guard Patrol Commander is a commissioned, warrant, or petty officer of the Coast Guard who has been designated by the Commander, Coast Guard Group Atlantic City.

(2) *Official Patrol.* The Official Patrol is any vessel with a commissioned, warrant, or petty officer of the Coast Guard on board and displaying a Coast Guard ensign.

(3) *Regulated Area.* The regulated area includes all waters of the Manasquan River from the New York and Long Branch Railroad to Manasquan Inlet, together with all waters of the Atlantic Ocean bounded by a line drawn from the end of the South Manasquan Inlet Jetty, easterly to Manasquan Inlet Lighted Buoy ''2M'', then southerly to a position at latitude 40°04′26″ N, longitude 074°01′30″ W, then westerly to the shoreline. All coordinates reference Datum NAD 1983.

(b) *Special local regulations.*

(1) No person or vessel may enter or remain in the regulated area unless participating in the event or authorized by the sponsor or Official Patrol. The sponsor or Official Patrol may intermittently authorize general navigation to pass through the regulated area. Notice of these opportunities will be given via Marine Safety Radio Broadcast on VHF–FM marine band radio, Channel 22 (157.1 MHz).

(2) No vessel shall proceed at a speed greater than six (6) knots while in Manasquan Inlet during the effective period.

(3) All persons and vessels shall comply with the instructions of the Official Patrol. The operator of a vessel in the regulated area shall stop the vessel immediately when instructed to do so by the Official Patrol and then proceed as directed.

(c) *Effective period.* This section is effective from 9:30 a.m. to 3:30 p.m. on August 15, 2003.

Dated: July 22, 2003.

Sally Brice-O'Hara,

Rear Admiral, Coast Guard, Commander, Fifth Coast Guard District.

[FR Doc. 03–19498 Filed 7–30–03; 8:45 am]

BILLING CODE 4910–15–P

DEPARTMENT OF HOMELAND SECURITY

Coast Guard

33 CFR Part 110

[CGD01–02–129]

RIN 1625–AA01

Anchorage Regulations: Rockland, ME

AGENCY: Coast Guard, DHS.

ACTION: Final rule.

SUMMARY: The Coast Guard hereby amends the anchorage regulations for Rockland Harbor by re-designating anchorage ground ''C'' as a special anchorage area and reorienting anchorage ground ''A''. This action is necessary to alert mariners that vessels moored within special anchorage ''C'', are not required to sound signals or display anchor lights or shapes, and provide a wider navigable channel between the two anchorages. This action is intended to increase the safety of life and property on navigable waters, improve the safety of anchored vessels in both anchorage ''A'' and the special anchorage area, and provide for the overall safe and efficient flow of vessel traffic and commerce.

DATES: This rule is effective September 2, 2003.

ADDRESSES: Comments and material received from the public, as well as documents indicated in this preamble as being available in the docket, are part of docket (CGD01–02–129), and are available for inspection or copying at room 628, First Coast Guard District Boston, between 8 a.m. and 3 p.m., Monday through Friday, except Federal holidays.

FOR FURTHER INFORMATION CONTACT: Mr. J. J. Mauro, Commander (oan), First Coast Guard District, 408 Atlantic Ave., Boston, MA 02110, Telephone (617) 223–8355, e-mail: *jmauro@d1.uscg.mil.*

SUPPLEMENTARY INFORMATION:

Regulatory Information

On April 1, 2003, we published a notice of proposed rulemaking (NPRM) entitled ''Anchorage Regulations: Rockland, Maine'' in the **Federal Register** (68 FR 15691). We received no letters commenting on the proposed

rule. No public hearing was requested, and none was held.

Background and Purpose

A request was made by the City of Rockland and Hartley Marine Services, Rockland, Maine, to accommodate the increased number of vessels mooring in Penobscot Bay, Rockland Harbor, and provide for safe navigation between the anchorages within the harbor. This rule will re-designate anchorage ground ''C'', identified in 33 CFR 110.132(a)(3), as a special anchorage area and reorient anchorage ''A'', identified in 33 CFR 110.132(a)(1).

The Coast Guard determined that the small commercial and recreational vessels now anchoring in anchorage ''C'' do not have the ability to maintain anchor lights sufficient to meet anchorage ground requirements. Vessel traffic, as well as users of anchorage ''C'', will transit and anchor more safely when anchorage ''C'' is designated a special anchorage area, limited to vessels less than 20 meters in length, since transiting vessels will neither expect sound signals nor anchor lights or shapes from all moored vessels. Establishing this special anchorage area will better meet future vessel traffic expectations of that area when it is re-designated as such and limited to vessels no greater than 20 meters in length.

In order to facilitate the safe and efficient flow of vessel traffic and commerce between anchorages ''A'' and the newly designated special anchorage area, the Coast Guard intends to reorient anchorage ''A''. Reorienting anchorage ''A'' will provide a wider channel between the two above-mentioned anchorages. Additionally, a wider channel will allow safer passage for vessels anchoring in anchorage ''A'' and the special anchorage area as well as vessel traffic transiting via Atlantic Point.

The Coast Guard has defined the anchorage areas contained herein with the advice and consent of the Army Corps of Engineers, New England District, located at 696 Virginia Rd., Concord, MA 01742.

Regulatory Evaluation

This rule is not a ''significant regulatory action'' under section 3(f) of Executive Order 12866, Regulatory Planning and Review, and does not require an assessment of potential costs and benefits under section 6(a)(3) of that Order. The Office of Management and Budget has not reviewed it under that Order. It is not ''significant'' under the regulatory policies and procedures of the Department of Homeland Security (DHS).

We expect the economic impact of this rule to be so minimal that a full Regulatory Evaluation under regulatory policies and procedures of DHS is unnecessary.

This finding is based on the fact that this rule conforms to the changing needs of the harbor, the changing needs of recreational, fishing and commercial vessels, and to make the best use of the available navigable water. This rule is in the interest of safe navigation and protection of the Port of Rockland and the marine environment.

Small Entities

Under the Regulatory Flexibility Act (5 U.S.C. 601–612), we have considered whether this rule would have a significant economic impact on a substantial number of small entities. The term ''small entities'' comprises small businesses, not-for-profit organizations that are independently owned and operated and are not dominant in their fields, and governmental jurisdictions with populations of less than 50,000.

The Coast Guard certifies under 5 U.S.C. 605(b) that this rule will not have a significant economic impact on a substantial number of small entities.

Assistance for Small Entities

Under section 213(a) of the Small Business Regulatory Enforcement Fairness Act of 1996 (Public Law 104–121), we offered to assist small entities in understanding the rule so that they can better evaluate its effects on them and participate in the rulemaking process.

If this rule would affect your small business, organization, or governmental jurisdiction and you have questions concerning its provisions or options for compliance, please contact John J. Mauro at the address listed in **ADDRESSES** above.

Small businesses may send comments on the actions of Federal employees who enforce, or otherwise determine compliance with, Federal Regulatory Enforcement Ombudsman and the Regional Small Business Regulatory Fairness Boards. The Ombudsman evaluates these actions annually and rates each agency's responsiveness to small business. If you wish to comment on actions by employees of the Coast Guard, call 1–888–REG–FAIR (1–888–734–3247).

Collection of Information

This calls for no new collection of information under the Paperwork Reduction Act of 1995 (44 U.S.C. 3501–3520). Federalism A rule has implications for federalism under Executive Order 13132, Federalism, if it has a substantial direct effect on State or local governments and would either preempt State law or impose a substantial direct cost of compliance on them. We have analyzed this rule under that Order and have determined that it does not have implications for federalism.

Unfunded Mandates Reform Act

The Unfunded Mandates Reform Act of 1995 (2 U.S.C. 1531–1538) requires Federal agencies to assess the effects of their discretionary regulatory actions. In particular, the Act addresses actions that may result in the expenditure by a State, local, or tribal government, in the aggregate, or by the private sector of $100,000,000 or more in any one year. Though this proposed rule would not result in such expenditure, we do discuss the effects of this rule elsewhere in this preamble.

Taking of Private Property

This rule will not effect a taking of private property or otherwise have taking implications under Executive Order 12630, Governmental Actions and Interference with Constitutionally Protected Property Rights.

Civil Justice Reform

This rule meets applicable standards in sections 3(a) and 3(b)(2) of Executive Order 12988, Civil Justice Reform, to minimize litigation, eliminate ambiguity, and reduce burden.

Protection of Children

We have analyzed this rule under Executive Order 13045, Protection of Children from Environmental Health Risks and Safety Risks. This rule is not an economically significant rule and does not create an environmental risk to health or risk to safety that may disproportionately affect children.

Indian Tribal Governments

This rule does not have tribal implications under Executive Order 13175, Consultation and Coordination with Indian Tribal Governments, because it does not have a substantial direct effect on one or more Indian tribes, on the relationship between the Federal Government and Indian tribes, or on the distribution of power and responsibilities between the Federal Government and Indian tribes.

Energy Effects

We have analyzed this rule under Executive Order 13211, Actions Concerning Regulations That

Significantly Affect Energy Supply, Distribution, or Use. We have determined that it is not a ''significant energy action'' under that Order because it is not a ''significant regulatory action'' under Executive Order 12866 and is not likely to have a significant adverse effect on the supply, distribution, or use of energy. It has not been designated by the Administrator of the Office of Information and Regulatory Affairs as a significant energy action. Therefore, it does not require a Statement of Energy Effects under Executive Order 13211.

Environment

We have considered the environmental impact of this rule and concluded that, under figure 2–1, paragraph 34(f), of Commandant Instruction M16475.1D, this rule is categorically excluded from further environmental documentation. A ''Categorical Exclusion Determination'' is available in the docket for inspection or copying where indicated under **ADDRESSES.** This rule fits paragraph 34(f) as it revises one anchorage ground and establishes a special anchorage area.

List of Subjects in 33 CFR Part 110

Anchorage grounds.

Regulations

■ For the reasons discussed in the preamble, the Coast Guard amends 33 CFR part 110 as follows:

PART 110—ANCHORAGE REGULATIONS

■ 1. The authority citation for part 110 continues to read as follows:

Authority: 33 U.S.C. 471; 1221 through 1236, 2030, 2035 and 2071; 33 CFR 1.05–1(g), and Department of Homeland Security Delegation No. 0170.1.

■ 2. Add § 110.4 to subpart A to read as follows:

§ 110.4 Penobscot Bay, Maine.

(a) *Rockland Harbor.* Beginning at a point bearing 244°, 1,715 yards, from Rockland Breakwater Light; thence 260°, 490 yards, to a point bearing 248° from Rockland Breakwater Light; thence 350°, 580 yards, to a point bearing 263° from Rockland Breakwater Light; thence 83°, 480 yards, to a point bearing 263° from Rockland Breakwater Light; and thence 169°, 550 yards, to the point of beginning. This area is limited to vessels no greater than 20 meters in length.

Note to paragraph (a): This area is primarily for use by yachts and other recreational craft. Temporary floats or buoy for marking the location of the anchor may be used. All moorings shall be so placed that no vessel, when anchored, shall at any time extend beyond the limits of the area. All anchoring in the area shall be under the supervision of the local harbormaster or such authority as may be designated by authorities of the City of Rockland, Maine. Requests for placement of mooring buoys shall be directed to the local government. Fixed mooring piles or stakes are prohibited.

(b) [Reserved].

■ 3. In § 110.132 revise paragraph (a)(1), remove paragraph (a)(3), and revise paragraphs (b)(1) and (b)(2) to read as follows:

§ 110.132 Rockland Harbor, Maine.

(a) *The anchorage grounds*—(1) *Anchorage A.* Beginning at a point bearing 158°, 1,075 yards, from Rockland Breakwater Light; thence 252°, 2,020 yards, to a point bearing 224° from Rockland Breakwater Light; thence 345°, 740 yards, to a point bearing 242° from Rockland Breakwater Light; thence 72°, 1,300 yards, to a point bearing 222° from Rockland Breakwater Light; and thence 120°, 1,000 yards, to the point of beginning.

* * * * *

(b) *The regulations.* (1) Anchorages A and B are general anchorage grounds reserved for merchant vessels, commercial vessels or passenger vessels over 65 feet in length. Fixed moorings, piles or stakes are prohibited.

(2) A distance of approximately 500 yards shall be left between Anchorages A and B for vessels entering or departing from the Port of Rockland. A distance of approximately 100 yards shall be left between Anchorage A and the Special Anchorage Area for vessels entering or departing facilities in the vicinity of Atlantic Point. Any vessel anchored in these anchorages shall be capable of moving and when ordered to move by the Captain of the Port shall do so with reasonable promptness.

* * * * *

Dated: July 17, 2003.

John L. Grenier,

Captain, Coast Guard, Acting Commander, First Coast Guard District.

[FR Doc. 03–19372 Filed 7–30–03; 8:45 am]

BILLING CODE 4910–15–P

DEPARTMENT OF HOMELAND SECURITY

Coast Guard

33 CFR Part 165

[CGD13–03–023]

RIN 1625–AA00

Safety Zone Regulations, Seafair Blue Angels Performance, Lake Washington, WA

AGENCY: Coast Guard, DHS.

ACTION: Temporary final rule.

SUMMARY: The Coast Guard is establishing a temporary safety zone on the waters of Lake Washington, Seattle, Washington. The Coast Guard is taking this action to safeguard the participants and spectators from the safety hazards associated with the Seafair Blue Angels Performance. Entry into this zone is prohibited unless authorized by the Captain of the Port, Puget Sound or his designated representatives.

DATES: This rule is effective from 8:30 a.m. on July 31, 2003 through 4 p.m. on August 3, 2003.

ADDRESSES: Documents as indicated in this preamble are available for inspection or copying at the U.S. Coast Guard Marine Safety Office Puget Sound, 1519 Alaskan Way South, Building 1, Seattle, Washington 98134. Normal office hours are between 8 a.m. and 4 p.m., Monday through Friday, except federal holidays.

FOR FURTHER INFORMATION CONTACT: LT Jeff Morgan, c/o Captain of the Port Puget Sound, at (206) 217–6231.

SUPPLEMENTARY INFORMATION:

Background and Purpose

We did not publish a notice of proposed rulemaking (NPRM) for this regulation. Under 5 U.S.C. (b)(B) the Coast Guard finds that good cause exists for not publishing an NPRM. The airshow poses several dangers to the public including excessive noise and objects falling from any accidents. Accordingly, prompt regulatory action is needed in order to provide for the safety of spectators and participants during the event. If normal notice and comment procedures were followed, this rule would not become effective until after the date of the event.

For the same reasons, under 5 U.S.C. (d)(3), the Coast Guard finds that good cause exists for making this rule effective less than 30 days after publication in the **Federal Register**.

Discussion of Rule

The Coast Guard is adopting a temporary safety zone regulation on the waters of Lake Washington, Seattle, Washington, for the Seafair Blue Angels Performance. The Coast Guard has determined it is necessary to close the area in the vicinity of the air show in order to minimize the dangers that low-flying aircraft present to persons and vessels. These dangers include, but are not limited to excessive noise and the risk of falling objects from any accidents associated with low flying aircraft. In the event that aircraft require emergency assistance, rescuers must have immediate and unencumbered access to the craft. The Coast Guard, through this action, intends to promote the safety of personnel, vessels, and facilities in the area. Entry into this zone will be prohibited unless authorized by the Captain of the Port or his representative. This safety zone will be enforced by Coast Guard personnel. The Captain of the Port may be assisted by other federal, state, or local agencies.

Regulatory Evaluation

This rule is not a ''significant regulatory action'' under section 3(f) of Executive Order 12866 and does not require an assessment of potential costs and benefits under section 6(a)(3) of that Order. The Office of Management and Budget has not reviewed it under that Order. It is not significant under the regulatory policies and procedures of the Department of Homeland Security (DHS). We expect the economic impact of this rule to be so minimal that a full Regulatory Evaluation under the regulatory policies and procedures of DHS is unnecessary. This expectation is based on the fact that the regulated area established by the regulation would encompass an area near the middle of Lake Washington, not frequented by commercial navigation. The regulation is established for the benefit and safety of the recreational boating public, and any negative recreational boating impact is offset by the benefits of allowing the Blue Angels to fly. For the above reasons, the Coast Guard does not anticipate any significant economic impact.

Small Entities

Under the Regulatory Flexibility Act (5 U.S.C. 601–612), the Coast Guard considered whether this rule would have a significant economic impact on a substantial number of small entities. ''Small entities'' include small businesses, not-for-profit organizations that are independently owned and operated and are not dominant in their fields, and governmental jurisdictions with populations of less than 50,000. This rule will affect the following entities, some of which may be small entities: the owners or operators of vessels intending to transit this portion of Lake Washington during the time this regulation is in effect. The zone will not have a significant economic impact due to its short duration and small area. The only vessels likely to be impacted will be recreational boaters and small passenger vessel operators. The event is held for the benefit and entertainment of those above categories. Because the impacts of this rule are expected to be so minimal, the Coast Guard certifies under 605(b) of the Regulatory Flexibility Act (5 U.S.C. 601–612) that this temporary rule will not have a significant economic impact on a substantial number of small entities.

If you think that your business, organization, or governmental jurisdiction qualifies as a small entity and that this rule would have a significant economic impact on it, please submit a comment (see **ADDRESSES**) explaining why you think it qualifies and how and to what degree this rule would economically affect it.

Assistance for Small Entities

Under section 213(a) of the Small Business Regulatory Enforcement Fairness Act of 1996 (Pub. L. 104–121), we want to assist small entities in understanding this rule so that they can better evaluate its effects on them and participate in the rulemaking. If the rule would affect your small business, organization, or governmental jurisdiction and you have questions concerning its provisions or options for compliance, please contact the person listed in the **FOR FURTHER INFORMATION CONTACT** section.

Collection of Information

This rule would call for no new collection of information under the Paperwork Reduction Act of 1995 (44 U.S.C. 3501–3520).

Federalism

We have analyzed this rule under Executive Order 13132 and have determined that this rule does not have implications for federalism under that Order.

Unfunded Mandates Reform Act

The Unfunded Mandates Reform Act of 1995 (2 U.S.C. 1531–1538) governs the issuance of Federal regulations that require unfunded mandates. An unfunded mandate is a regulation that requires a State, local, or tribal government or the private sector to incur direct costs without the Federal Government's having first provided the funds to pay those costs. This rule would not impose an unfunded mandate.

Taking of Private Property

This rule would not effect a taking of private property or otherwise have taking implications under Executive Order 12630, Governmental Actions and Interference with Constitutionally Protected Property Rights.

Civil Justice Reform

This rule meets applicable standards in sections 3(a) and 3(b)(2) of Executive Order 12988, Civil Justice Reform, to minimize litigation, eliminate ambiguity, and reduce burden.

Protection of Children

We have analyzed this rule under Executive Order 13045, Protection of Children from Environmental Health Risks and Safety Risks. This rule is not an economically significant rule and does not concern an environmental risk to health or risk to safety that may disproportionately affect children.

Indian Tribal Governments

This rule does not have tribal implications under Executive Order 13175, Consultation and Coordination with Indian tribal governments, because it does not have a substantial direct effect on one or more Indian tribes, on the relationship between the federal government and Indian tribes, or on the distribution of power and responsibilities between the federal government and Indian tribes.

Energy Effects

We have analyzed this rule under Executive Order 13211, Actions Concerning Regulations That Significantly Affect Energy Supply, Distribution, or Use. We have determined that it is not a ''significant energy action'' under that Order because it is not a ''significant regulatory action'' under Executive Order 12866 and is not likely to have a significant adverse effect on the supply, distribution, or use of energy. It has not been designated by the Administrator of the Office of Information and Regulatory Affairs as a significant energy action. Therefore, it does not require a Statement of Energy Effects under Executive Order 13211.

Environment

We considered the environmental impact of this rule and concluded that, under figure 2–1, paragraph (34)(g) of Commandant Instruction M16475.lD, this rule is categorically excluded from

further environmental documentation. A Categorical Exclusion is provided for temporary safety zones of less than one week in duration. This rule establishes a temporary safety zone of limited duration that will be within the one-week timeframe.

List of Subjects in 33 CFR Part 165

Harbors, Marine safety, Navigation (water), Reporting and recordkeeping requirements, Security measures, Waterways.

■ For the reasons set out in the preamble, the Coast Guard amends part 165 of Title 33, Code of Federal Regulations, as follows:

PART 165—REGULATED NAVIGATION AREAS AND LIMITED ACCESS AREAS

■ 1. The authority citation for part 165 continues to read as follows:

Authority: 33 U.S.C. 1226, 1231; 46 U.S.C. Chapter 701; 50 U.S.C. 191, 195; 33 CFR 1.05–1(g), 6.04–1, 6.04–6, and 160.5; Pub. L. 107–295, 116 Stat. 2064; Department of Homeland Security Delegation No. 0170.1.

■ 2. From 8:30 a.m. on July 31, 2003 through 4 p.m. on August 3, 2003, a temporary § 165.T13–014 is added to read as follows:

§ 165.T13–014 Safety Zone Regulations, Seafair Blue Angels Performance, Seattle, WA.

(a) *Location.* The following area is a safety zone: All waters of Lake Washington, Washington State, enclosed by the following points: Starting at the northwest corner of Faben Point at 47°35′34.5″ N, 122°15′13″ W; thence to 47°35′48″ N, 122°15′45″ W; thence to 47°36′02.1″ N, 122°15′50.2″ W; thence to 47°35′56.6″ N, 122°16′29.2″ W; thence to 47°35′42″ N, 122°16′24″ W; thence to the east side of the entrance to the west highrise of the Interstate 90 bridge; thence easterly along the south side of the bridge to a point 1130 yards east of the western terminus of the bridge; thence southerly to a point in Andrews Bay at 47°33′06″ N, 122°15′32″ W; thence northeast along the shoreline of Bailey Peninsula to its northeast point at 47°33′44″ N, 122°15′04″ W; thence easterly along the east-west line drawn tangent to Bailey Peninsula; thence northerly along the shore of Mercer Island to the point of origin.[Datum: NAD 1983]

(b) *Regulations.* In accordance with the general regulations in § 165.23 of this part, no person or vessel may enter or remain in the zone except for participants in the event, supporting personnel, vessels registered with the event organizer, or other vessels authorized by the Captain of the Port or his designated representatives.

(c) *Enforcement periods.* This section will be enforced from 8:30 a.m. until 4 p.m., Pacific Daylight Time, on July 31 and August 1, 2, 3, 2003.

Dated: July 18, 2003.

D. Ellis,

Captain, Coast Guard, Captain of the Port, Puget Sound.

[FR Doc. 03–19525 Filed 7–30–03; 8:45 am]

BILLING CODE 4910–15–P

DEPARTMENT OF HOMELAND SECURITY

Coast Guard

33 CFR Part 165

[CGD09–03–207]

RIN 1625–AA01

Tall Ships 2003, Navy Pier, Chicago, IL, July 30–August 4, 2003

AGENCY: Coast Guard, DHS.

ACTION: Temporary final rule.

SUMMARY: The Coast Guard is increasing the size of the Regulated Navigation Area (RNA) for the Chicago Tall Ships 2003 event at Navy Pier. These regulations are necessary to control vessel traffic in the immediate vicinity for the protection of both participant and spectator vessels during the 2003 Tall Ships Challenge and Parade of Ships. These regulations are intended to restrict vessel traffic in a portion of Lake Michigan in the vicinity of Chicago Harbor for the duration of the event. This change will expand the size of the RNA in order to improve the level of safety for both participant and spectator vessels during the 2003 Tall Ships Challenge and Parade of Ships and will also extend the effective date by one day.

DATES: This rule is effective from 8 p.m. on Wednesday, July 30, 2003 until 5 p.m. on Monday, August 4, 2003.

ADDRESSES: Comments and material received from the public, as well as documents indicated in this preamble as being available in the docket, are part of docket CGD09–03–207 and are available for inspection or copying at U.S. Coast Guard Marine Safety Office Chicago, 215 W. 83rd Street, Suite D, Burr Ridge, IL 60527, between 8 a.m. and 4 p.m. Monday through Friday, except federal holidays.

FOR FURTHER INFORMATION CONTACT: MST2 Kenneth Brockhouse, MSO Chicago, at (630) 986–2155.

SUPPLEMENTARY INFORMATION:

Regulatory Information

On July 17, 2003, we published a temporary final rule entitled Tall Ships 2003, Navy Pier, Chicago, IL, July 30–August 4, 2003 in the **Federal Register** (68 FR 42285). In that regulation, we suspended some anchorage regulations, established a moving safety zone, as well as a Regulated Navigation Area (RNA). However, in this rulemaking, the size of that RNA is being increased.

Under 5 U.S.C. 553(d)(3), the Coast Guard finds that good cause exists for making this rule effective less than 30 days after publication in the **Federal Register**. Delaying the effective date of this rule would be contrary to the public interest of ensuring the safety of spectators and vessels during this event and immediate action is necessary to prevent possible loss of life or property. The Coast Guard has not received any complaints or negative comments with regard to this event. The Coast Guard, along with planning officials for the Chicago Tall Ships 2003 from the State of Illinois and the City of Chicago, have decided that a larger RNA is necessary to ensure safety and protection during this event.

For the same reasons, under 5 U.S.C.(b)(B) the Coast Guard finds that good cause exists for not publishing an NPRM.

Background and Purpose

During the Chicago Tall Ships event, tall ships will be participating in a Tall Ships Parade and then mooring in Chicago harbor and in the Chicago River. While a moving safety zone is being established to ensure the safety of official participant vessels during the parade, an RNA is also being established that encompasses portions of both the Chicago Harbor as well as the Chicago River. This RNA is to ensure the safety of spectator vessels and official participant vessels, as well as those boarding the tall ships, from vessels transiting at excessive speeds creating large wakes, and also to prevent obstructed waterways. The RNA will be established on July 30, 2003 and terminate on August 4, 2003 after all the tall ships have departed the area.

Discussion of Comments and Changes

No comments were received regarding this rule. The following change is being made from the previous temporary rule: the regulated navigation area (RNA) is being expanded in order to improve the level of safety for both participant and spectator vessels during the 2003 Tall Ships Challenge and Parade of Ships.

Regulatory Evaluation

This rule is not a ''significant regulatory action'' under section 3(f) of Executive Order 12866 on Regulatory Planning and Review and therefore does not require an assessment of potential costs and benefits under section 6(a)(3) of that Order. The Office of Management and Budget has not reviewed this rule under that order. It is non-significant under Department of Homeland Security regulatory policies and procedures. We expect the economic impact of this rule to be so minimal that a full Regulatory Evaluation under paragraph 10(e) of the regulatory policies and procedures of DHS is unnecessary. This finding is based on the minimal time that vessels will be restricted from the zone.

Small Entities

In accordance with the Regulatory Flexibility Act (5 U.S.C. 601–612) has determined that this rule will not have a significant impact on a substantial number of small entities. The term ''small entities'' comprises small businesses, not-for-profit organizations that are independently owned and operated and are not dominant in their fields, and governmental jurisdictions with populations of less than 50,000.

The Coast Guard certifies under 5 U.S.C. 605(b) that this rule would not have a significant economic impact on a substantial number of small entities. This final rule would affect the following entities, some of which might be small entities: The owners or operators of vessels intending to transit or anchor in a portion of an activated safety zone. The safety zone and suspended anchorage area would not have a significant economic impact on a substantial number of small entities for the following reasons. Vessel traffic can safely pass outside the proposed safety zone during the event. Traffic would be allowed to pass through the safety zone only with the permission of the Captain of the Port or his on-scene representative which will be the Patrol Commander. In addition, before the effective period, the Coast Guard would issue maritime advisories widely available to users who might be in the affected area.

If you think that your business, organization, or governmental jurisdiction qualifies as a small entity and that this rule would have a significant economic impact on it, please submit a comment (*see* **ADDRESSES**) explaining why you think it qualifies and how and to what degree this rule would economically affect it.

Assistance for Small Entities

Under section 213(a) of the Small Business Regulatory Enforcement Fairness Act of 1996 (Pub. L. 104–121), the Coast Guard wants to assist small entities in understanding this rule so that they can better evaluate its effects and participate in the rulemaking process. If the rule would affect your small business, organization, or governmental jurisdiction and you have questions concerning its provisions or options for compliance, please contact MSO Chicago (*see* **ADDRESSES**).

Collection of Information

This rule would call for no new collection of information under the Paperwork Reduction Act of 1995 (44 U.S.C. 3501–3520).

Federalism

We have analyzed this rule under Executive Order 13132 and have determined that this rule does not have implications for federalism under that Order.

Unfunded Mandates Reform Act

The Unfunded Mandates Reform Act of 1995 (2 U.S.C. 1531–1538) governs the issuance of Federal regulations that require unfunded mandates. An unfunded mandate is a regulation that requires a state, local, or tribal government or the private sector to incur direct costs without the Federal Government's having first provided the funds to pay those costs. This rule would not impose an unfunded mandate.

Taking of Private Property

This rule would not effect a taking of private property or otherwise have taking implications under Executive Order 12630, Governmental Actions and Interference with Constitutionally Protected Property Rights.

Civil Justice Reform

This rule meets applicable standards in sections 3(a) and 3(b)(2) of Executive Order 12988, Civil Justice Reform, to minimize litigation, eliminate ambiguity, and reduce burden.

Protection of Children

We have analyzed this rule under Executive Order 13045, Protection of Children from Environmental Health Risks and Safety Risks. This rule is not an economically significant rule and does not concern an environmental risk to health or risk to safety that may disproportionately affect children.

Indian Tribal Governments

This rule does not have tribal implications under Executive Order 13175, Consultation and Coordination with Indian Tribal Governments, because it would not have a substantial direct effect on one or more Indian tribes, on the relationship between the Federal Government and Indian tribes, or on the distribution of power and responsibilities between the Federal Government and Indian tribes.

Energy Effects

We have analyzed this rule under Executive Order 13211, Actions Concerning Regulations That Significantly Affect Energy Supply, Distribution, or Use. We have determined that it is not a ''significant energy action'' under that Order because it is not a ''significant regulatory action'' under Executive Order 12866 and is not likely to have a significant adverse effect on the supply, distribution, or use of energy. It has not been designated by the Administrator of the Office of Information and Regulatory Affairs as a significant energy action. Therefore, it does not require a Statement of Energy Effects under Executive Order 13211.

Environment

The Coast Guard has considered the environmental impact of this rule and concluded that, under figure 2–1, paragraph 32(g) of Commandant Instruction M16475.1C, this rule is categorically excluded from further environmental documentation. A written categorical exclusion determination is available in the docket for inspection or copying where indicated under **ADDRESSES**.

List of Subjects in 33 CFR Part 165

Harbors, Marine safety, Navigation (water), Reporting and recordkeeping requirements, Security measures, Waterways.

■ For the reasons discussed in the preamble, the Coast Guard amends 33 CFR part 165 as follows:

PART 165—REGULATED NAVIGATION AREAS AND LIMITED ACCESS AREAS

■ 1. The authority citation for part 165 continues to read as follows:

Authority: 33 U.S.C. 1226, 1231; 46 U.S.C. Chapter 70: 50 U.S.C. 191, 195; 33 CFR 1.05–1(g), 6.04–1, 6.04–6 and 160.5; Pub. L. 107–295, 116 Stat. 2064; Department of Homeland Security Delegation No. 0170.1.

§ 165.T09–207 [Amended]

■ 2. In § 165.T09–207 remove and reserve paragraph (a).

■ 3. Add § 165.T09–257 to read as follows:

§ 165.T09–257 Tall Ships 2003, Navy Pier, Lake Michigan, Chicago, IL.

(a) *Regulated navigation area; location.* The following is a regulated navigation area: starting at the Alder Planetarium at 41°52′00″ N, 87°36′22″ W; then east to 41°52′00″ N, 087°35′26″ W; then north to the southern most end of the outer Chicago Harbor break wall at 41°52′48″ N, 087°35′26″ W; then north and then northwest following the outer Chicago Harbor break wall to 41°54′11″ N, 087°36′29″ W; then southeast to the north-east tip of the Central District Filtration Plant; then following the shoreline including up the Chicago River to the eastern side of the Michigan Avenue bridge back to the point of origin (NAD 83).

(b) *Effective period.* This section is effective from 8 p.m. on Wednesday, July 30, 2003 until 5 p.m. on Monday, August 4, 2003.

(c) *Special regulations.* Vessels within the RNA shall not exceed 5 miles per hour or shall proceed at no-wake speed, whichever is slower. Vessels within the RNA shall not pass within 20 feet of a moored tall ship. Vessels within the RNA must adhere to the direction of the Patrol Commander or other official patrol craft.

Dated: July 24, 2003.

Ronald F. Silva,

Rear Admiral, Coast Guard, Commander, Ninth Coast Guard District.

[FR Doc. 03–19542 Filed 7–28–03; 4:08 pm]

BILLING CODE 4910–15–P

DEPARTMENT OF TRANSPORTATION

National Highway Traffic Safety Administration

49 CFR Part 571

[DOT Docket No. NHTSA–2002–13704]

RIN: 2127–AH23

Federal Motor Vehicle Safety Standards; Definition of Multifunction School Activity Bus

AGENCY: National Highway Traffic Safety Administration (NHTSA), DOT.

ACTION: Final rule.

SUMMARY: This final rule establishes a new class of school buses, multifunction school activity buses, for use in transporting children on trips other those than between home and school. We anticipate that this final rule will also facilitate efforts by the Federal Transit Administration to provide funding to Head Start programs and coordinated transportation providers to purchase the school buses. Currently, that Administration is prohibited from providing financial assistance to purchase regular yellow school buses that exclusively transport students and school personnel in competition with a private school bus operator. We anticipate that the new buses will be used for coordinated transportation purposes by State and local social services agencies, which may, for example, use the new buses to transport children from Head Start facilities to school in the morning, and to transport senior citizens later in the day. Finally, enabling schools and other institutions to choose the new buses instead of a 15-passenger van will provide them with a safer transportation alternative.

DATES: *Effective date:* The effective date for the final rule is: September 2, 2003. Manufacturers are provided optional early compliance with this final rule beginning July 31, 2003. *Petitions for reconsideration:* Petitions for reconsideration of the final rule must be received not later than September 15, 2003.

ADDRESSES: Petitions for reconsideration of the final rule must refer to the docket and notice number set forth above and be submitted to the Administrator, National Highway Traffic Safety Administration, 400 Seventh Street, SW., Washington, DC, 20590, with a copy to Docket Management, Room PL–401, 400 Seventh Street, SW., Washington, DC 20590.

FOR FURTHER INFORMATION CONTACT:

For non-legal issues, you may call Mr. Charles Hott, Office of Crashworthiness Standards at (202) 366–0247. His FAX number is (202) 493–2739.

For legal issues, you may call Ms. Dorothy Nakama, Office of the Chief Counsel at (202) 366–2992. Her FAX number is (202) 366–3820.

You may send mail to both of these officials at National Highway Traffic Safety Administration, 400 Seventh St., SW., Washington, DC, 20590.

SUPPLEMENTARY INFORMATION:

Table of Contents

I. Executive Summary
II. Background—Relevant NHTSA Laws and Policies
III. Notice of Proposed Rulemaking
IV. Public Comments to the NPRM and NHTSA's Response
A. Should the Multifunction School Activity Bus Subcategory be Created?
B. Should the MFSAB be a ''Bus'' or ''School Bus?'
C. Other Vehicle Classification Issues
D. Limits on Gross Vehicle Weight Rating for the MFSAB
E. FMVSS No. 222, School Bus Passenger Seating and Crash Protection
F. Warning Labels
G. Passenger Restraints
H. Emergency Exits
I. State Law Issues
V. Final Rule
VI. How This Final Rule Affects Other Federal Agencies
A. U.S. Department of Health and Human Services (DHHS)—Head Start Bureau
B. Federal Transit Administration (FTA)
C. National Transportation Safety Board (NTSB)
VII. Leadtime
VIII. Rulemaking Analyses and Notices
A. Executive Order 12866 and DOT Regulatory Policies and Procedures
B. Executive Order 13132 (Federalism)
C. Executive Order 13045 (Economically Significant Rules Affecting Children)
D. Executive Order 12778 (Civil Justice Reform)
E. Regulatory Flexibility Act
F. National Environmental Policy Act
G. Paperwork Reduction Act
H. National Technology Transfer and Advancement Act
I. Unfunded Mandates Reform Act of 1995
J. Plain Language
K. Regulation Identifier Number (RIN)
Text of the Final Rule

I. Executive Summary

This final rule establishes a new class of school buses, multifunction school activity buses (MFSABs), for use in transporting children on trips other those than between home and school.

Under current Federal law, dealers cannot sell a bus for the purpose of transporting school-age students to or from school or related events unless it meets all requirements in all Federal motor vehicle safety standards for school buses. Among those requirements are ones requiring all school buses to be equipped with control traffic (*i.e.*, flashing lights and stop arms) designed to avoid crashes and injuries to pedestrians. The standards require those devices to deploy automatically when the front entrance door is opened.

Those traffic control devices are primarily intended to be used on trips involving picking school children up from or dropping them off at a roadside location at or near home. However, not all school children trips involve picking children up from or dropping them off at such locations. For example, some trips involve taking children from a before-school facility to a school or from a school to an after-school facility. State laws do not permit the use of the traffic control devices on those trips.

This rulemaking excludes MFSABS from the requirements for the traffic control devices. This exclusion resolves the conflict between the NHTSA standards that previously required all

new school buses to be equipped with traffic control devices, and State laws that do not permit the use of the traffic control devices on the types of trips that the new buses will be making. The new buses are not required to have those devices since the buses, unlike regular yellow school buses, are not intended for the roadside picking up and dropping off of children during service between home and school. While the MFSABs are not required to be equipped with the traffic control devices, they are, however, required to meet all requirements in the school bus crashworthiness standards, all other requirements in the school bus crash avoidance safety standards, and all post-crash school bus standards.

We anticipate that this final rule will also facilitate efforts by the Federal Transit Administration to provide funding to Head Start programs and coordinated transportation providers to purchase the school buses. Currently, that Administration is prohibited from providing financial assistance to purchase regular yellow school buses that exclusively transport students and school personnel in competition with a private school bus operator. We anticipate that the new buses will be used for coordinated transportation purposes by State and local social services agencies, which may, for example, use the new buses to transport children from Head Start facilities to school in the morning, and to transport senior citizens later in the day.

Finally, enabling schools and other institutions to choose the new buses instead of a 15-passenger van will provide them with a safer transportation alternative since the new buses comply with all school bus requirements in the Federal Motor Vehicle Safety Standards except those relating to traffic control devices.

II. Background—Relevant NHTSA Laws and Policies

NHTSA's statute requires any person selling or leasing a new vehicle to sell or lease a vehicle that meets all applicable standards issued by the agency. Under our regulations, a ''bus'' is any vehicle (including a van) that has a seating capacity of 11 persons or more. The statute defines a ''school bus'' as any vehicle that is designed for carrying 11 or more persons and that is likely to be ''used significantly to transport preprimary, primary, and secondary students *to or from school* or an event related to school.'' (Emphasis added.) 49 U.S.C. 30125.

More broadly, we deem a bus likely to be used significantly to transport preprimary, primary, or secondary students to or from school or school-related events if, for example, it will be used for any of the following purposes on a regular basis: Pick students up from home to take them to school; pick them up from a place other than home (*e.g.*, a before-school care facility) and drop them off at school; or pick them up from school and drop them off at home or a place other than home (*e.g.*, an after-school care facility). The term ''school'' does not include pre-school (nursery) centers, or Head Start programs.

We have informed motor vehicle dealers that new buses sold to child-care providers and other entities that routinely drop students off at school or pick them up from school are required to be buses that meet the school bus safety standards, even though the purchasing organizations are not schools themselves. (*See, e.g.*, July 23, 1998 letter to Mr. Don Cote, Northside Ford, filed in this docket at 13704–51)

In our interpretations of Section 30125, we have stated that a bus that is sold for school transportation must meet all standards applicable to school buses, including the four-way/eight-way alternating flashing lights required by FMVSS No. 108 and the stop-arm required by FMVSS No. 131.[1] Thus, even if school buses will be used only to transport children on activity trips or other trips that do not include home-to-school transportation, dealers currently cannot sell a school bus unless those buses are equipped with flashing lights and stop arms. This is true even if these devices are not likely to be used on such trips. It is also true even if State law does not allow them to be used on such trips or requires them to be removed before making such trips.

One reason we are issuing this final rule is that after selling or leasing school buses, dealers cannot remove the four-way/eight-way flashing lights and stop-arms from them. Under 49 U.S.C. Section 30122, ''Making safety devices and elements inoperative,'' manufacturers, distributors, dealers, or motor vehicle repair businesses may not ''knowingly make inoperative'' any part of a device or element of design installed on or in a motor vehicle or motor vehicle equipment in compliance with an applicable motor vehicle safety standard. Before the issuance of this final rule, all school buses had to be equipped with the four-way/eight-way flashing lights and stop arms. Since it does not appear to make sense to have dealers sell school buses with equipment that the buyer wants removed, we are defining a new category of school buses without four-way/eight-way flashing lights and stop arms.

[1] The flashing lights are required by FMVSS No. 108 to operate automatically when the bus entrance door is opened. The stop arm is required by FMVSS No. 131 to operate automatically when the lights are flashing, except that a manual override device may be provided by the vehicle manufacturer.

III. Notice of Proposed Rulemaking

On November 5, 2002 (67 FR 67373) (DOT Docket No. NHTSA–2002–13704), we published in the **Federal Register** a notice of proposed rulemaking (NPRM) to create a new school bus category, the ''Multifunction School Activity Bus'' (MFSAB). We proposed to except the new category from the requirement for school bus warning lamps at S5.1.4 of Federal Motor Vehicle Safety Standard (FMVSS) No. 108, *Lamps, reflective devices and associated equipment,* 49 CFR 571.108, and from the requirement for stop signal arms in FMVSS No. 131, *School bus pedestrian safety devices,* 49 CFR 571.131. We proposed to limit the category to buses with a gross vehicle weight rating of 6,804 kilograms (15,000 pounds) or less, and invited comment as to whether the new buses should have a label warning drivers that the buses were not for home-to-school service. We denied aspects of the Rabun-Gap petition relating to seat strength, seat spacing, and seat width for reasons set forth in the NPRM. A full explanation of why we granted or denied aspects of Rabun-Gap's petition is in the November 5, 2002 NPRM at 67 FR 67373.

IV. Public Comments to the NPRM and NHTSA's Response

NHTSA received a total of 48 public comment submissions in response to the NPRM. Some commenters commented more than once, and several submissions had identical or similar wording. We received comments from Alabama Department of Education, Amalgamated Transit Union (ATU), American Academy of Pediatrics (AAP), Black Gold Regional Schools Educational Authority, Blue Bird Body Company, Brownsville Independent School District (of Brownsville, Texas), Department of California Highway Patrol, Correctrack Inc., Transportation Consultant John Fairchild, Ford Motor Company, Hurst-Euless-Bedford Independent School District (of Bedford, Texas), IC Corporation, Indiana Department of Education, Kibois Area Transit System (of Stigler, Oklahoma), Les Entreprises Michel Corbeil Inc. (Corbeil), Maine Department of Education, National Association of Independent Schools (NAIS), National Association of State Directors of Pupil Transportation Services (NASDPTS), National Automobile Dealers

Association (NADA), National Child Care Association (NCCA), National School Transportation Association (NSTA), National Transportation Safety Board (NTSB), Public Schools of North Carolina, Public Citizen, Pupil Transportation Safety Institute, Inc., Rabun Gap Nacoochee School (Rabun), Texas Association for Pupil Transportation, Texas Department of Public Safety, Thomas Built Buses, U.S. Bus Corporation, Utah State Office of Education, Virginia Association for Pupil Transportation (VAPT), Wisconsin Department of Transportation, and many private citizens. The following summarizes the comments, and our response to the comments.

A. Should the Multifunction School Activity Bus Subcategory Be Created?

Most commenters wrote in favor of the proposed new school bus category. However, some individual citizens, the state of Maine and AAP wrote against the proposal. The state of Maine commented that creating a new subcategory of school buses without traffic control features ''creates a level of complexity and potentially an elevated hazard level * * * without producing a significant offsetting benefit.'' AAP expressed concern about the MFSAB classification, stating that the traffic control features on a school bus ''are meant to protect pedestrians, who account for significantly more school bus related fatalities than school bus passengers.'' In its May 1996 Policy Statement on School Transportation Safety (R9616), regarding deaths to children as a result of school-bus related events, AAP stated that the ''majority of pedestrians killed were young children who were struck by their own school buses.'' NHTSA notes that activated traffic control devices on a school bus make surrounding motorists aware that children are outside and around a school bus and that the motorists should take extra precautions for the children. NHTSA and the States have other measures and programs (including school bus driver training) to lessen the chances that school children will be struck by their school buses.

NHTSA has decided to adopt the multifunction school activity bus vehicle classification, as proposed. NHTSA is conducting this rulemaking to promote flexibility in the choice of vehicles. NHTSA emphasizes that the MFSAB is not to be used by schools or school districts to transport school children on regular school bus route transportation. Because of this limitation, school children will not be exposed as pedestrians to traffic situations that stop arm and four-way/eight-way traffic control devices are designed to control, and we have concluded that the MFSAB will not lead to an increase in school children pedestrian fatalities as the AAP comments suggested. NHTSA agrees with Maine that creating a new category of school bus adds an additional level of complexity for school districts because it creates a school bus category that cannot be used for normal home-to-school transportation. However, NHTSA does not agree that this new school bus category will increase the risk of injuries or fatalities for the reasons explained above and below.

As explained in the NPRM, this final rule makes it easier for transportation providers other than schools or school districts to buy the MFSAB, which will be a safer transportation alternative to the 15-passenger van and motor coach bus for use by Head Start programs or senior citizens. If, after carefully considering all possible bus types, the transportation provider decides that the persons it transports are best served by a school bus with traffic control features, it is free to buy such a school bus rather than the MFSAB.

B. Should the MFSAB Be a ''Bus'' or ''School Bus?''

NADA and NCCA recommended that the new vehicle category should be a ''multifunction activity bus,'' rather than a ''multifunction school activity bus.'' NADA suggested that the MFSAB does not suit its intended purpose and recommended that the multifunction activity bus be defined as ''a bus that is designed for purposes that include transporting students to and from school, but not to and from home.'' NADA stated that this definition has the advantage of avoiding the use of the term ''*school bus,* which has a number of legal and practical Federal, State and local ramifications.'' NADA further suggested that NHTSA should redefine the term ''school bus'' more narrowly and establish a new ''bus'' subcategory. They suggested that NHTSA should redefine ''school bus'' (in 49 CFR 571.3 ''Definitions'') to read ''a bus that is designed for purposes that include carrying students between home and school, but not a bus designed for operation as a common carrier in urban transportation.'' [2] NADA also stated that the ''sold or introduced in interstate commerce'' language in the present definition of school bus, ''places an undue focus on the new vehicle sale or lease transaction and inherently requires sellers or lessors to ascertain a purchaser's intended use,'' and that the primary burden of standards compliance should be placed on manufacturers of these vehicles.

For the following reasons, NHTSA has decided not to adopt NADA's and NCCA's recommendations for the redefinitions of ''school bus'' and ''bus.'' First, redefining these terms would be outside the scope of the rulemaking, as NHTSA in the NPRM proposed a definition of ''multifunction school activity bus,'' not redefinitions of ''school bus'' or ''bus.'' Second, statutory language specifies that only a new school bus may be sold ''significantly to transport preprimary, primary, and secondary school students to or from school or an event related to school.'' (*See* 49 U.S.C. 30125(a)). This statutory definition takes precedence over any regulatory definition, and amending 49 CFR 571.3 (''Definitions'') would not alter the statute. Therefore, defining the MFSAB as a ''bus'' would put NHTSA in the anomalous situation of fining sellers and lessors that sell or lease new ''buses'' to child care centers or other transportation providers that use the MFSAB to take children to and from school or on school-related activities. Thus, defining the MFSAB as a ''bus'' would defeat the purpose of this rulemaking.

Third, NHTSA does not agree that in ensuring that nonconforming new buses are not sold for school transportation purposes, the emphasis on sellers or lessors of new motor vehicles poses a burden on sellers or lessors or on NHTSA. NHTSA's position was explained in an interpretation letter of May 9, 2001 to Collins Bus Corporation, a bus manufacturer. When a day care center wished to purchase a bus to transport children to their homes, Collins asked for guidance about assurances the day care center had to provide a dealer or manufacturer that the intended use does not dictate a school bus. Collins noted that the user is the only person who can actually know how the bus will be used during its life. As part of our answer, we stated that although NHTSA does not currently presume that day care centers universally are engaged in the transportation of children to and from school:

> * * * where it is likely that the purchaser or lessor of a new bus is a day care center, in light of the widespread publicity that has surrounded the issue, we expect a dealer to inquire as to whether the vehicle would also

[2] At present, ''school bus'' is defined at 49 CFR Section 571.3 as ''a bus that is sold, or introduced in interstate commerce, for purposes that include carrying students to and from school or related events, but does not include a bus designed and sold for operation as a common carrier in urban transportation.''

be used to drop off or pick up students from school. If it appears that a vehicle will be used significantly for student transportation, the requirement to sell a certified school bus that meets the Federal motor vehicle safety standards for school buses would apply. Confirmation in writing would appear to be prudent.

Thus, if the present definition of ''school bus'' does not include the term ''sold, or introduced in interstate commerce,'' NHTSA's enforcement efforts to ensure that dealers and lessors of new vehicles do not sell or lease nonconforming buses for school transportation purposes may be frustrated.[3] Therefore, when this final rule takes effect, where it is likely that the purchaser or lessor of a new MFSAB is a State agency, private or public school, or school district, we expect a dealer to inquire as to whether the vehicle will also be used to drop off or pick up students from school. If it appears that the MFSAB will be ''used significantly'' for transportation between children's homes and school, the requirement to sell a school bus that meets the Federal motor vehicle safety standards for school buses, including FMVSSs No. 108 and No. 131 would apply. NHTSA also notes that changing the ''school bus'' and ''bus'' definitions would not affect dealers' and lessors' statutory responsibilities in ensuring that they do not sell new nonconforming buses for school transportation purposes.

C. Other Vehicle Classification Issues

Public Citizen stated that it recognized Head Start programs' need to purchase vehicles that meet the crashworthiness and crash avoidance protection of school buses and did not object to NHTSA's proposal. However, Public Citizen urged NHTSA to go further and create a new category of buses called the ''Multi-Function Activity Buses'' to ensure that all buses weighing less than 15,000 pounds GVWR, including 15-passenger vans, meet the school bus crash avoidance, crashworthiness, and post-crash requirements required for school buses. The NPRM did not propose to apply the school bus requirements to buses that are not used to transport school children. Public Citizen's recommendation is thus outside the scope of the present rulemaking. However, the adoption of this final rule will give transportation providers the alternative for a safer transportation choice.

[3] *See* 49 U.S.C. Section 30112 ''Prohibition on manufacturing, selling, and importing noncomplying motor vehicles and equipment.''

The California Highway Patrol recommended that the MFSAB be defined as a school bus whose purpose does not include transporting students to and from home ''or a school bus stop.'' The rationale for this suggestion was that school buses often pick children up at designated school bus stops, rather than at their homes. Specifying the school bus stop in the definition would make explicit that children should not be picked up from their homes or from school bus stops when transported in a MFSAB. NHTSA agrees that specifying that children should not be picked up from school bus stops would eliminate a potential ambiguity. Thus, in this final rule, the definition of MFSAB states: ''a school bus whose purposes do not include transporting students to and from home or school bus stops.''

D. Limits on Gross Vehicle Weight Rating for the MFSAB

The majority of commenters on this issue, including NTSB, recommended that NHTSA not adopt the 6,804 kg (15,000 pound) gross vehicle weight rating (GVWR) limitation on the MFSAB. NTSB stated that it did not believe the risk of misuse is significant because using vehicles other than school buses to pick up and drop off children at home ''is generally prohibited.'' NTSB stated that it is not aware of evidence that school districts are misusing vehicles in this manner.

Blue Bird Body Company stated that removing the GVWR weight limitations would meet the need for safety, in that more organizations would be encouraged to buy MFSABs in lieu of non-school buses. Blue Bird noted the increasing public awareness that school buses are safer than non-school buses, and reported increases in requests for school buses (including larger school buses) from churches and colleges to replace the ''vans'' that had been used. Blue Bird also noted that many schools own used motorcoaches, especially in the western states where travel distances are greater. Blue Bird stated that there is a market demand for a ''school activity bus'' that is more comfortable than a ''typical school bus.'' Since the motorcoaches do not meet school bus safety standards, the students are unnecessarily placed at risk. Blue Bird stated its belief that having no weight restrictions on the MFSABs will encourage the schools to buy MFSABs ''that meet the school bus crashworthiness standards of construction.''

NASDPTS cautioned that the proposed 15,000 pound GVWR limitation ''would eliminate larger buses from the potential of federal funding under the Federal Transit Administration,'' possibly frustrating coordinated transportation providers' efforts in meeting the needs of its customers. It also noted that it would not be practicable to expect a school, child care center, Head Start program, or coordinated transportation provider to purchase two or more small MFSABs in lieu of one large MFSAB because of the additional costs that would be incurred for more drivers, additional maintenance, and insurance.

The Texas Department of Public Safety stated that if MFSABs included all sizes of school buses, Texas could change its definition of a ''school activity bus'' to include the MFSAB. This would mean a school district could buy a vehicle as safe as a school bus to transport students on activity trips.

NSTA, on the other hand, supported the limitation of the MFSAB to buses not larger than 15,000 pounds GVWR. NSTA expressed concern about the possibility of misuse, especially by private schools that often come under less scrutiny by state agencies than do public schools. NSTA also noted that coordinated transportation systems could combine adult and student passenger loads and stage pick-ups at curbside bus stops. Although this would not constitute home-to-school transportation, students could be endangered because there would be roadside loading and offloading without the benefit of the school bus traffic control devices. NSTA also expressed concern that school student safety would be compromised because the large MFSAB would not require a school bus driver, that the MFSAB driver would need only a passenger endorsement, without the additional safety training of a school bus driver.

Regarding the potential misuse of the MFSAB by home to school transportation providers, NHTSA shared this concern. However, every State has laws that require school bus drivers to activate the warning lamps and stop signal arm whenever the school bus is stopped to pick up or discharge students on public roads. A driver failing to activate these devices would be in violation of State law. Thus, every State already has a law that prohibits school districts from using a MFSAB to transport children to and from school, since it would be picking up or discharging students without activating warning lamps and the school bus stop arm. The misuse issue is discussed in greater detail in Section I., ''State Law Issues.''

These State laws have also persuaded NHTSA that it is unlikely that larger

MFSABs would be misused, and therefore, weight limitations for MFSABs are not necessary. Hence, NHTSA has decided to not adopt the 6,804 kg (15,000 pound) GVWR limitation on MFSABs.

Removing a weight limitation on MFSABs would also further NHTSA's goal of promoting choice for transportation providers since it would mean that those whose transportation choices are now buses over 6,804 kg or school buses over 6,804 kg would have an alternative bus over 6,804 kg (*i.e.*, the MFSAB) that provides the same crashworthiness, crash avoidance and post-crash safety protection as does a school bus, without the traffic control features that are not used.

NSTA's concern about coordinated transportation systems where children could be loaded and offloaded without the benefit of school bus traffic control devices is an issue of vehicle use, regulated by the States. Some areas in the U.S. may not be financially able to provide a school bus system for school transportation and a separate bus system for everyone else. Transportation systems using MFSABs would offer all riders more protection than if non-school buses were used.

NSTA's concern that a large MFSAB would not require a school bus driver is a matter that would be addressed by State law. State law would determine the type of license (bus v. school bus) a driver would need to drive the MFSAB.

E. FMVSS No. 222, School Bus Passenger Seating and Crash Protection

Although the NPRM denied those aspects of the Rabun-Gap petition pertaining to school bus seats, several comments addressed the issue of seating. Blue Bird Body Company recommended that FMVSS No. 222, *School bus passenger seating and crash protection,* be amended to make the provisions that presently apply to school buses 10,000 pounds GVWR and under to also apply (at the option of the manufacturer) to MFSABs over 10,000 pounds GVWR.

Blue Bird stated that many schools want their ''school activity buses'' to have reclining seats, wider seat width for each passenger, and more seat separation so that tall and large students are more comfortable on long trips. They stated that FMVSS No. 222 ''compartmentalization'' requirements restrict school bus manufacturers' ability to meet comfort requirements, especially for school buses over 10,000 pounds GVWR. Blue Bird noted that FMVSS No. 222 requires that small school buses (10,000 pounds GVWR or under) be equipped with Type 1 or Type 2 seat belts and does not require that they meet S5.2, Restraining Barrier Requirements, of FMVSS No. 222. Thus, MFSABs with a GVWR of 10,000 pounds or less would not be restricted as to the requirement for a restraining barrier forward of a passenger seat and, therefore, would not be constrained as to a maximum allowable seat spacing.

Blue Bird went on to note that if MFSABs over 10,000 pounds GVWR, when equipped with seat belts, were excepted (as small school buses are now excepted) from S5.2, then seat spacing would no longer be an issue. Blue Bird therefore recommended that manufacturers of large MFSABs be allowed to meet the provisions of FMVSS No. 222 as they apply to school buses 10,000 pounds GVWR or under.

Blue Bird also recommended that S4.1 of FMVSS No. 222 be amended to permit a manufacturer of MFSABs to install only two seat belts on any seat that is between 22.5 inches and 39 inches in width, ''to meet customer requirements for no more than two passengers per seat on a MFSAB.'' Blue Bird cited market demand for more seating room on school bus bench seats and stated that ''something will need to be changed to permit the installation of only two seat belts on a 39-inch wide seat in a MFSAB.''

Rabun addressed NHTSA's discussion in the NPRM that the MFSAB could be equipped with reclining motorcoach style seating and still meet FMVSS No. 222 because the standard specifies that when the school bus is tested, adjustable seat backs are to be ''adjusted to its most upright position.'' (*See* NPRM at 67 FR 67378.) Rabun responded that its discussions with school bus manufacturers have led them to believe that ''such seats, when in the reclined position, do not meet the intent of FMVSS No. 222 and are therefore not available for sale in buses certified as school buses.'' Rabun recommended the use of combination lap/shoulder belts since they believed ''a passenger who is seated behind a seat in the reclining position and who is wearing a lap/shoulder restraint would be better protected in a frontal collision than if the passenger did not have seat belts, even if the seating system was certified to meet the requirements of FMVSS No. 222.'' Rabun also expressed the view that if each passenger was provided a lap/shoulder restraint and was required to use it, the issue of compartmentalization and seat spacing would be ''correspondingly insignificant.''

AAP expressed concern that the proposed rule did not require seating positions to be equipped with lap/shoulder belts and LATCH. AAP called on NHTSA to ''move in the direction of ensuring greater safety of children on school buses by requiring them to be equipped with lap/shoulder belts.'' John Fairchild recommended that NHTSA should at least ''encourage'' every MFSAB to provide Type II lap/shoulder seat belt systems at every seating position, and to provide ''appropriate securement systems for the child restraint devices Head Start specifies, and could serve other paratransit clients as well.''

Since none of these suggested amendments were proposed in the NPRM, we are unable to adopt them without further notice and opportunity for comment. We are aware of the continuing interest in possible improvements to school bus seating. In May 2002, we reported to Congress on prospective improvements for occupant protection in school buses, as required by the Transportation Equity Act for the 21st Century (TEA–21)(P.L. 105–178).[4]

NHTSA is in the process of developing test procedures for voluntarily installed lap/shoulder belts in school buses over 4,536 kg (10,000 pounds) gross vehicle weight rating. We expect to propose some improvements in this area in the next year or so.

F. Warning Labels

Commenters on this issue expressed skepticism about the efficacy of interior labels warning that MFSABs should not be used to transport school children between home and school. NASDPTS questioned the benefit of a warning label on the MFSAB as to its intended use. That organization stated that using the MFSAB to transport students to and from school would violate laws in every state. It noted that if ''someone with this knowledge is pre-conditioned to violate state laws, and expose themselves and their school district to extreme liability risks, it does not seem reasonable to assume that the addition of a warning label will change that individual's mind.'' NASDPTS also noted that there are already ''a large number'' of labels on school buses, and that at some point, there are diminishing returns of adding even more warning labels. NASDPTS recommended that any potential MFSAB misuse be addressed through school bus driver training rather than by another warning label.

[4] Section 2007(b) of TEA–21 states: ''School Bus Occupant Safety Study—The Secretary shall conduct a study to assess occupant safety in school buses. The study shall examine available information and occupant safety and analyze options for improving occupant safety.''

John Fairchild recommended the adoption of a ''performance standard for an interior warning device that specifies the vehicle's current operational status.'' Fairchild suggested that the device or label should at a minimum indicate whether the vehicle is in use as a school activity bus, Head Start AAV, or other type of service. Vehicles dedicated to a single use would need to provide ''only the one appropriate indicator related to its defined activity.''

The Department of California Highway Patrol recommended a warning label stating: ''This vehicle is not intended for daily school-bus route use,'' that would be placed in a general location such as the driver's compartment where it would be easily visible by the driver or any passenger who enters or exits the vehicle.

NAIS ''sees no harm'' in placing a warning label, and suggested a label in the driver's view that ''the MFSAB should not load or unload passengers if the passengers are not protected from traffic.''

VAPT recommended that a warning label be placed in a prominent spot and that the label state: ''No loading once the trip begins. No unloading until reaching the destination. [Head Start Only—monitor shall accompany students crossing the road.]'' NSTA also supported the requirement for a warning label.

The Utah State Office of Education recommended a warning label near the front of the occupant compartment stating: ''This Bus Is Not To Be Used To Bus Students To or From School or Home.''

In the NPRM, NHTSA did not propose a specific warning label, but did ask for comments on this issue. In particular, NHTSA asked whether MFSAB manufacturers should be required to place a prominent warning near the front of the occupant compartment, warning the driver and passengers that the bus was not intended to be used to pick children up from and drop them off at places such as home and bus stops. If commenters believed that such a warning was appropriate, NHTSA asked for comment on standardized wording, size and other appearance requirements and location.

A number of commenters addressed the general question of whether or not a warning label was appropriate, without addressing the more specific questions. Commenters who did not believe a label was appropriate expressed concerns about such a label distracting attention from other warning labels or stated that State laws and liability concerns would prevent misuse of the MFSAB. Most of those supporting a label did not give specific information about why a label would be helpful; however, a few did express concern about the possibility of misuse.

A few commenters provided specific comment about the form a warning label should take if required. One commenter, John Fairchild, recommended the adoption of a ''performance standard for an interior warning device that specifies the vehicle's current operational status,'' *i.e.*, school activity bus, Head Start AAV, etc. Other commenters offered specific language indicating either that the MFSAB was not to be used for school bus routes or that there should be no unloading before reaching the final destination, but each commenter's suggested language differed from the others.

Only one commenter addressed the issues of size and location. Les Entreprises Michel Corbeil, Inc. indicated that if a warning label were found to be necessary, the ''label should be as small as possible but clearly visible to the drivers and to passengers seated in at least the first three rows.''

After carefully considering the public comments, NHTSA has decided not to specify a warning label in the final rule. NHTSA is not convinced that a warning label would be necessary to convey the message that the MFSAB should not be used for regular school bus use. As NASDPTS noted, using the MFSAB to transport students to and from school would violate laws in every state. Further, as many commenters pointed out, there are already a large number of labels in school buses. For these reasons, and because NHTSA did not propose a specific label, NHTSA has decided to monitor the use of the MFSAB. If misuse occurs, NHTSA will reconsider the warning label at a later date.

G. Passenger Restraints

U.S. Bus Corporation asked for clarification of whether the MFSAB with a GVWR of 10,000 pounds or less must meet passenger restraint system requirements in FMVSS No. 208, *Occupant crash protection* or in FMVSS No. 222, *School bus passenger seating and crash protection.* NHTSA's response is that as a school bus category, all MFSABs, including those that are 10,000 pounds GVWR or under, must meet FMVSS No. 222.

H. Emergency Exits

U.S. Bus Corporation also noted that FMVSS No. 217, *Bus emergency exits and window retention and release,* has different requirements for emergency exit windows and emergency exit doors for buses versus school buses. They asked for clarification of which set of FMVSS No. 217 requirements the MFSAB must meet. Because the MFSAB would be a category of school bus, it would have to meet all of the emergency exit requirements specified in FMVSS No. 217 for school buses.

I. State Law Issues

Commenters offered these additional comments on issues that fall within the purview of State law.

Potential Misuse by Home to School Transportation Providers

In the NPRM, NHTSA explained that it proposed a size limitation on MFSABs because it was concerned about the possibility of misuse, *i.e.*, the possibility that schools would purchase school buses without traffic control devices as a means of saving money on buses used to pick children up from and drop them off at home. In its comments, NASDPTS addressed NHTSA's concern. NASDPTS stated that every State has laws that require school bus drivers to activate the warning lamps and stop signal arm whenever the school bus is stopped to pick up or discharge students on public roads. A driver failing to activate these devices would be in violation of State law. Further, if a school district used a MFSAB to transport children to and from school, it would be violating its State laws since it would be picking up or discharging students without activating warning lamps and the stop signal arm. NASDPTS noted: ''Such actions would not only be punishable under state law, but would also expose the school district, school board, state department of education, etc. to extreme liability risks that would far outweigh any savings that might accrue from ordering a MFSAB rather than a ''school bus.'''

VAPT stated its belief that the possibility of misuse is lessened because state agencies that oversee the operations and specifications for school buses used in the public schools do a very good job of educating and training its members. VAPT stated that these state agencies responsible for pupil transportation can also distribute information to other state agencies, or can notify its member schools about any new classification and ask the individual school district directors to distribute notices locally.

NAIS suggested that NHTSA consider requiring schools using MFSABs to load and unload students in protected areas out of roadways, whether in a parking space, parking lot, or turnaround area. NAIS suggested that such a rule ''may be a more appropriate reminder on a sticker in the bus than one reminding

users that students should not be dropped off at home or other bus stops.'' NHTSA does not have the statutory authority to regulate where and how students are to be picked up or dropped off. Operational requirements such as this are matters of State law.

The Amalgamated Transit Union encouraged NHTSA to prohibit school districts from using passenger vans to transport children to and from school and school-related activities. Because regulation of vehicle use is a matter of State law, NHTSA cannot adopt this recommendation. However, NHTSA and the National Transportation Safety Board have been on record as recommending that school children be transported in school buses (including the MFSAB), and not in buses that do not meet NHTSA's school bus standards.

School Bus Color

Corbeil (a school bus and bus manufacturer), the National Child Care Association, John Fairchild, and U.S. Bus Corporation recommended that the final rule contain a provision prohibiting the MFSAB from being painted National School Bus Glossy Yellow. This recommendation will not be adopted because NHTSA did not propose to regulate MFSAB color in the NPRM and thus, the issue is outside the scope of this rulemaking. Although NHTSA does not at present regulate school bus color, all States require school buses that provide home-to-school transportation to be painted National School Bus Glossy Yellow, as recommended in Highway Safety Program Guideline No. 17, ''Pupil Transportation Safety.''

NHTSA is also aware that some States allow ''activity buses'' used by schools to be painted a color other than National School Bus Glossy Yellow. When this final rule takes effect, each State will determine whether MFSABs used by schools for activity trips, child care facilities for point-to-point school transportation, or coordinated transportation systems for various transportation services, must be painted a color other than National School Bus Glossy Yellow. NHTSA is not aware of any safety problems associated with color identification in buses that are already performing these services. Should it appear that there is a safety need, NHTSA will consider regulating school bus color.

School Bus Driver Training

John Fairchild recommended that NHTSA develop specific training materials related to operational issues for the MFSAB drivers and riders. NASDPTS recommended that any potential MFSAB misuse be addressed through school bus driver training rather than by a warning label.

School bus driver training is primarily a responsibility of State and local governments. However, NHTSA will consider developing educational materials, to be used voluntarily by school transportation trainers, that discuss restrictions on the use of MFSABs, especially involving to and from school transportation for school children.

V. Final Rule

After reviewing the public comments, NHTSA has decided to adopt a new school bus category, the ''multifunction school activity bus,'' with the following characteristics:

1. The MFSAB is classified as a ''school bus,'' not a ''bus.''
2. There is no upper weight limit on the MFSAB.
3. The MFSAB must meet FMVSS No. 222, as FMVSS No. 222 is presently written.
4. The MFSAB must meet all warning label requirements applicable to school buses. There is no label unique to the MFSAB.
5. Because school bus color is regulated by State law, NHTSA does not prohibit the MFSAB from being painted National School Bus Glossy Yellow.

VI. How This Final Rule Affects Other Federal Agencies

A. U.S. Department of Health and Human Services (DHHS)—Head Start Bureau

With this final rule, we intend to create a subcategory of school buses that qualify as ''allowable alternate vehicles'' under DHHS' Head Start regulations, 45 CFR 1310.12, and thus could be used to transport Head Start Program participants.

B. Federal Transit Administration (FTA)

We anticipate that creation of the MFSAB will aid the efforts of Regional Transit Authorities (which must serve the general public) and Head Start both to meet State law and to satisfy the limitations on the availability of funding from the FTA. Since the MFSABs do not have the school bus flashing lights and stop arms, NHTSA expects that transit authorities and other transportation providers can readily obtain FTA funding to buy MFSABs, provided that such vehicles are not used as school buses to provide home-to-school service. Further, as noted above, in many States, the flashing lights and stop arms are permitted only on ''school buses'' (as defined by State law).

C. National Transportation Safety Board (NTSB)

By making available a category of school bus that may be somewhat less expensive than the school bus with traffic control devices, NHTSA anticipates that the final rule will help child transportation providers in implementing the NTSB's recommendation that children be transported in buses that ''meet the school bus structural standards or the equivalent set forth in *49 Code of Federal Regulations Part 571*.''

VII. Leadtime

All public commenters addressing the leadtime issue urged that this final rule take effect as soon as possible. Accordingly, this final rule is effective thirty days from the date this document is published in the **Federal Register**. Optional early compliance with this final rule is provided as of the date this document is published in the **Federal Register**.

VIII. Regulatory Analyses and Notices

A. Executive Order 12866 and DOT Regulatory Policies and Procedures

Executive Order 12866, ''Regulatory Planning and Review'' (58 FR 51735, October 4, 1993), provides for making determinations whether a regulatory action is ''significant'' and therefore subject to Office of Management and Budget (OMB) review and to the requirements of the Executive Order. The Order defines a ''significant regulatory action'' as one that is likely to result in a rule that may:

(1) Have an annual effect on the economy of $100 million or more or adversely affect in a material way the economy, a sector of the economy, productivity, competition, jobs, the environment, public health or safety, or State, local, or Tribal governments or communities;

(2) Create a serious inconsistency or otherwise interfere with an action taken or planned by another agency;

(3) Materially alter the budgetary impact of entitlements, grants, user fees, or loan programs or the rights and obligations of recipients thereof; or

(4) Raise novel legal or policy issues arising out of legal mandates, the President's priorities, or the principles set forth in the Executive Order.

We have considered the impact of this rulemaking action under Executive Order 12866 and the Department of Transportation's regulatory policies and procedures. This rulemaking document was not reviewed by the Office of Management and Budget under E.O. 12866, ''Regulatory Planning and

Review.'' The rulemaking action is also not considered to be significant under the Department's Regulatory Policies and Procedures (44 FR 11034; February 26, 1979).

For the following reasons, we believe that this final rule will not increase vehicle manufacturers' costs to provide school buses for uses other than transportation of students between home and school. In order to manufacture a ''multifunction school activity bus,'' vehicle manufacturers need only manufacture a school bus and omit including the four-way/eight-way alternating flashing lights and stop arm.

For the following reasons, depending on how the new ''multifunction school activity bus'' is priced, NHTSA believes that organizations that at present purchase school buses for transportation purposes other than to and from home to school might realize a cost benefit as a result of this rulemaking.

As earlier discussed, this final rule creates a subcategory of school buses that need not meet requirements for flashing four-way/eight-way alternating flashing lights or a stop arm. Estimates supplied by Blue Bird Body Company (a school bus manufacturer) indicate that the average cost of the four-way/eight-way alternating flashing lights is approximately $417 per school bus and the average cost of the stop-arm is approximately $560. Estimates supplied by Thomas Built Buses (another school bus manufacturer) indicate that the cost for the four-way/eight-way alternating flashing lights ranges from $175 for the least expensive four-way system to $2,300 for the most expensive eight-way system and the cost for stop-arms ranges from $250 to $720. Based on those figures, the cost of adding stop-arms and alternating flashing lights ranges from $425 to $3020 per school bus.

The Annual Fact Book published by *School Transportation News* reports a strong increase in sales of ''Type A'' school buses (approximately 4,536 kg (10,000 pounds) GVWR); increasing from 6,389 in the 1995–1996 school year to 10,475 in the 1998–1999 school year. The agency notes that from 1990 through 1997, approximately 6,000 ''Type A'' school buses were sold each year. The agency believes that the increase in the sales of small school buses for years following 1997 is mostly due to purchases by organizations such as day care centers and Head Start, which provide child transportation. The agency does not have any data to indicate what percentages of the ''Type A'' school buses are sold to organizations that provide transportation other than between home and school. We note that since approximately 6,000 small ''Type A'' school buses were sold per year prior to 1997, a reasonable assumption would be that about 4,000 of these buses are sold to day care centers and others for transportation purposes other than to and from home to school.

Based on the cost figures discussed above and the conservative estimate of 4,000 Type A school buses sold each year, we estimate that this final rule may save child transportation providers approximately $3.9 million dollars per year in the small ''Type A'' school bus market. However, this estimate assumes that school bus manufacturers will reduce the prices of the ''multifunction school activity bus'' by the amount of money saved as a result of not having to install four-way/eight-way alternating flashing lights or stop arms on those vehicles.

Because the economic impacts of this proposal are so minimal (*i.e.*, the annual effect on the economy is less than $100 million), no further regulatory evaluation is necessary.

B. Executive Order 13132 (Federalism)

Executive Order 13132 requires us to develop an accountable process to ensure ''meaningful and timely input by State and local officials in the development of regulatory policies that have federalism implications.'' ''Policies that have federalism implications'' is defined in the Executive Order to include regulations that have ''substantial direct effects on the States, on the relationship between the national government and the States, or on the distribution of power and responsibilities among the various levels of government.'' Under Executive Order 13132, we may not issue a regulation with Federalism implications, that imposes substantial direct compliance costs, and that is not required by statute, unless the Federal government provides the funds necessary to pay the direct compliance costs incurred by State and local governments, or unless we consult with State and local governments, or unless we consult with State and local officials early in the process of developing the proposed regulation. We also may not issue a regulation with Federalism implications and that preempts State law unless we consult with State and local officials early in the process of developing the proposed regulation.

This final rule will not have substantial direct effects on the States, on the relationship between the national government and the States, or on the distribution of power and responsibilities among the various levels of government, as specified in Executive Order 13132. The reason is that this final rule, applies to motor vehicle manufacturers, not to the States or local governments. This final rule assists child transportation providers by making available a school bus that meets the traffic control laws of States and local governments. Thus, the requirements of Section 6 of the Executive Order do not apply to this final rule.

C. Executive Order 13045 (Economically Significant Rules Disproportionately Affecting Children)

Executive Order 13045 (62 FR 19885, April 23, 1997) applies to any rule that: (1) Is determined to be ''economically significant'' as defined under E.O. 12866, and (2) concerns an environmental, health or safety risk that NHTSA has reason to believe may have a disproportionate effect on children. If the regulatory action meets both criteria, we must evaluate the environmental health or safety effects of the planned rule on children, and explain why the planned regulation is preferable to other potentially effective and reasonably feasible alternatives considered by us.

This final rule is not subject to the Executive Order because it is not economically significant as defined in E.O. 12866 and does not involve decisions based on environmental, health or safety risks that disproportionately affect children. However, this final rule makes a school bus vehicle type available for transportation purposes other than to and from home to school. Although we do not have any estimates of the extent or nature of the practice throughout the country, the agency is informed by the National Child Care Association that at present, in many cases, children provided transportation to and from child care facilities are transported in 15-passenger vans or other buses that do not meet the special requirements for school buses. This final rule increases the chances that children are transported in MFSABs, rather than in buses that are not school buses and the children's safety is thereby enhanced.

D. Executive Order 12778 (Civil Justice Reform)

Pursuant to Executive Order 12778, ''Civil Justice Reform,'' we have considered whether this final rule has any retroactive effect. We conclude that it does not have such an effect. Under 49 U.S.C. 30103, whenever a Federal motor vehicle safety standard is in effect, a State may not adopt or maintain a safety standard applicable to the same aspect of performance which is not identical to the Federal standard, except

to the extent that the state requirement imposes a higher level of performance and applies only to vehicles procured for the State's use.

49 U.S.C. 30161 sets forth a procedure for judicial review of final rules establishing, amending or revoking Federal motor vehicle safety standards. That section does not require submission of a petition for reconsideration or other administrative proceedings before parties may file suit in court.

E. Regulatory Flexibility Act

Pursuant to the Regulatory Flexibility Act (5 U.S.C. 601 *et seq.*, as amended by the Small Business Regulatory Enforcement Fairness Act (SBREFA) of 1996) whenever an agency is required to publish a notice of rulemaking for any proposed or final rule, it must prepare and make available for public comment a regulatory flexibility analysis that describes the effect of the rule on small entities (*i.e.*, small businesses, small organizations, and small governmental jurisdictions). However, no regulatory flexibility analysis is required if the head of an agency certifies the rule would not have a significant economic impact on a substantial number of small entities. SBREFA amended the Regulatory Flexibility Act to require Federal agencies to provide a statement of the factual basis for certifying that a rule would not have a significant economic impact on a substantial number of small entities.

The agency Administrator has considered the effects of this rulemaking action under the Regulatory Flexibility Act (5 U.S.C. 601 *et seq.*) and certifies that this final rule will not have a significant economic impact on a substantial number of small entities. We believe that this final rule benefits small businesses, small nonprofits and small local governments slightly because they are now able to purchase a school bus without traffic control devices on them, potentially saving $977 per school bus (using figures provided by Blue Bird Body Company), and saving small entity providers of transportation other than to and from home to school transportation approximately $3.9 million dollars per year. This cost savings assumes that school bus manufacturers (some of which are small businesses) pass on to customers the cost savings resulting from not installing the traffic control devices on the school buses.

Accordingly, the agency believes that this final rule has a small beneficial cost effect on small motor vehicle manufacturers considered to be small business entities, on small businesses (that presently transport children in school buses with the four-way/eight-way alternating flashing lights and stop arms) providing transportation other than to and from home to school, or child care, small nonprofits, and small local governmental entities.

F. National Environmental Policy Act

We have analyzed this rule for the purposes of the National Environmental Policy Act and determined that it would not have any significant impact on the quality of the human environment.

G. Paperwork Reduction Act

NHTSA has determined that this final rule will not impose any ''collection of information'' burdens on the public, within the meaning of the Paperwork Reduction Act of 1995 (PRA). This rulemaking action will not impose any filing or recordkeeping requirements on any manufacturer or any other party.

H. National Technology Transfer and Advancement Act

Section 12(d) of the National Technology Transfer and Advancement Act of 1995 (NTTAA), Public Law 104–113, section 12(d) (15 U.S.C. 272) directs us to use voluntary consensus standards in our regulatory activities unless doing so would be inconsistent with applicable law or otherwise impractical. Voluntary consensus standards are technical standards (*e.g.*, materials specifications, test methods, sampling procedures, and business practices) that are developed or adopted by voluntary consensus standards bodies, such as the Society of Automotive Engineers (SAE). The NTTAA directs us to provide Congress, through OMB, explanations when we decide not to use available and applicable voluntary consensus standards.

After conducting a search of available sources, we have determined that there are not any voluntary consensus standards applicable to this rulemaking.

I. Unfunded Mandates Reform Act

Section 202 of the Unfunded Mandates Reform Act of 1995 (UMRA) requires Federal agencies to prepare a written assessment of the costs, benefits and other effects of proposed or final rules that include a Federal mandate likely to result in the expenditure by State, local or tribal governments, in the aggregate, or by the private sector, of more than $100 million in any one year (adjusted for inflation with base year of 1995). Before promulgating a NHTSA rule for which a written statement is needed, section 205 of the UMRA generally requires us to identify and consider a reasonable number of regulatory alternatives and adopt the least costly, most cost-effective or least burdensome alternative that achieves the objectives of the rule. The provisions of section 205 do not apply when they are inconsistent with applicable law. Moreover, section 205 allows us to adopt an alternative other than the least costly, most cost-effective or least burdensome alternative if we publish with the final rule an explanation why that alternative was not adopted.

This final rule will not result in costs of $100 million or more to either State, local, or tribal governments, in the aggregate, or to the private sector. Thus, this rule is not subject to the requirements of sections 202 and 205 of the UMRA.

J. Plain Language

Executive Order 12866 requires each agency to write all rules in plain language. Application of the principles of plain language includes consideration of the following questions:

—Have we organized the material to suit the public's needs?

—Are the requirements in the rule clearly stated?

—Does the rule contain technical language or jargon that is not clear?

—Would a different format (grouping and order of sections, use of headings, paragraphing) make the rule easier to understand?

—Would more (but shorter) sections be better?

—Could we improve clarity by adding tables, lists, or diagrams?

—What else could we do to make this rulemaking easier to understand?

K. Regulation Identifier Number (RIN)

The Department of Transportation assigns a regulation identifier number (RIN) to each regulatory action listed in the Unified Agenda of Federal Regulations. The Regulatory Information Service Center publishes the Unified Agenda in April and October of each year. You may use the RIN contained in the heading at the beginning of this document to find this action in the Unified Agenda.

List of Subjects in 49 CFR Part 571

Imports, Motor vehicle safety, Motor vehicles, Rubber and rubber products, Tires.

■ In consideration of the foregoing, the Federal Motor Vehicle Safety Standards (49 CFR part 571), are amended as set forth below.

PART 571—FEDERAL MOTOR VEHICLE SAFETY STANDARDS

■ 1. The authority citation for part 571 continues to read as follows:

Authority: 49 U.S.C. 322, 30111, 30115, 30117, and 30166; delegation of authority at 49 CFR 1.50.

■ 2. Section 571.3 is amended by adding a definition of ''Multifunction school activity bus'' to paragraph (b), in the appropriate alphabetical order, to read as follows:

§ 571.3 Definitions.

* * * * *

(b) * * *

Multifunction school activity bus (MFSAB) means a school bus whose purposes do not include transporting students to and from home or school bus stops.

* * * * *

■ 3. Section 571.108 is amended by revising the introductory sentence in S5.1.4 to read as follows:

§ 571.108 Standard No. 108, Lamps, reflective devices, and associated equipment.

* * * * *

5.1.4 Except for multifunction school activity buses, each school bus shall be equipped with a system of either:

* * * * *

■ 4. Section 571.131 is amended by revising S3 to read as follows:

§ 571.131 Standard No. 131, School bus pedestrian safety devices.

* * * * *

S3. *Application.* This standard applies to school buses other than multifunction school activity buses.

* * * * *

Issued on: July 21, 2003.

Jeffrey W. Runge,

Administrator.

[FR Doc. 03–19457 Filed 7–28–03; 10:13 am]

BILLING CODE 4910–59–P

Proposed Rules

Federal Register
Vol. 68, No. 147
Thursday, July 31, 2003

This section of the FEDERAL REGISTER contains notices to the public of the proposed issuance of rules and regulations. The purpose of these notices is to give interested persons an opportunity to participate in the rule making prior to the adoption of the final rules.

OFFICE OF PERSONNEL MANAGEMENT

5 CFR Part 212

RIN 3206–AJ75

Competitive Service and Competitive Status

AGENCY: Office of Personnel Management.

ACTION: Proposed rule.

SUMMARY: The Office of Personnel Management (OPM) is proposing a plain language rewrite of its regulations on the definitions of competitive service and competitive status as part of a broader review of OPM's regulations. The purpose of the revision is to make these definitions consistent with law and civil service rules.

DATES: Comments must be received on or before September 29, 2003.

ADDRESSES: Send, deliver or fax comments to Ellen Tunstall, Deputy Associate Director for Talent and Capacity Policy, U.S. Office of Personnel Management, Room 6551, 1900 E Street, NW., Washington, DC 20415–9700; e-mail *employ@opm.gov;* fax: 202–606–2329.

FOR FURTHER INFORMATION CONTACT: Ms. Karen Jacobs on (202) 606–0960, by TDD on is (202) 418–3134, by fax on (202) 606–2329, or by e-mail at *kkjacobs@opm.gov.*

SUPPLEMENTARY INFORMATION: We are revising the format of Part 212 and eliminating subparts that merely restate the provisions of 5 U.S.C. 2102 and Civil Service Rules 1.2 and 1.3 of this chapter. The purpose of these revisions is not to make substantive changes but, rather, to make the definitions in this part consistent with the definitions found in statute and in the civil service rules of this chapter.

Regulatory Flexibility Act

I certify that these regulations will not have a significant economic impact on a substantial number of small entities (including small businesses, small organizational units, and small governmental jurisdictions) because the regulations apply only to appointment procedures for certain employees in Federal agencies.

E.O. 12866, Regulatory Review

This rule has been reviewed by the Office of Management and Budget in accordance with Executive Order 1866.

List of Subjects in 5 CFR Parts 212

Government employees.

Office of Personnel Management.

Kay Coles James,

Director.

Accordingly, OPM proposes to revise 5 CFR part 212 as follows:

PART 212—COMPETITIVE SERVICE AND COMPETITIVE STATUS

Sec.
212.101 Definitions.
212.102 Effect of competitive status on a position.

Authority: 5 U.S.C. 1302, 3301, 3302; E.O. 10577, 3 CFR, 1954–1958 Comp. p. 218.

§ 212.101 Definitions.

In this chapter:

Competitive service has the meaning given that term by section 2102 of title 5, United States Code, and sections 1.2 and 1.3 of this chapter.

Competitive status has the meaning given that term by section 1.3 of this chapter.

Competitive position has the meaning given that term by section 1.3 of this chapter.

§ 212.102 Effect of competitive status on a position.

An employee shall be considered as being in the competitive service when the employee meets the conditions established by section 1.3 of this chapter.

[FR Doc. 03–19470 Filed 7–30–03; 8:45 am]

BILLING CODE 6325–38–P

DEPARTMENT OF TRANSPORTATION

Federal Aviation Administration

14 CFR Part 39

[Docket No. 2001–NE–13–AD]

RIN 2120–AA64

Airworthiness Directives; Rolls-Royce plc (RR) RB211–22B, RB211–524, and RB211–535 Series Turbofan Engines

AGENCY: Federal Aviation Administration, DOT.

ACTION: Supplemental notice of proposed rulemaking (SNPRM); reopening of comment period.

SUMMARY: This notice revises an earlier proposed airworthiness directive (AD), applicable to (RR) RB211–535E4 series turbofan engines. That proposal would have required disassembling and inspecting all the engine mounts for cracks, refurbishing the engine mounts, and replacing the front mount thrust link spherical bearing. That proposal was prompted by reports of corrosion and fatigue cracks in the mount pins, the spherical bearings, and the support links and their respective spherical bearings. This action revises the proposed rule by expanding the applicability from RB211–535E4 series turbofan engines to include RB211–22B, RB211–524, and RB211–535 series turbofan engines, and by requiring the installation of a front engine mount housing and link support assembly that has a serialized, life limited spherical bearing installed. This action also revises the proposed rule by eliminating the requirements for disassembling and inspecting all the engine mounts for cracks, and refurbishing the engine mounts. The actions specified by this proposed AD are intended to prevent failure of the front engine mount housing and link support assembly due to cracks, that could result in loss of the engine.

DATES: Comments must be received by September 29, 2003.

ADDRESSES: Submit comments in triplicate to the Federal Aviation Administration (FAA), New England Region, Office of the Regional Counsel, Attention: Rules Docket No. 2001–NE–13–AD, 12 New England Executive Park, Burlington, MA 01803–5299. Comments may be inspected at this location, by appointment, between 8 a.m. and 4:30

p.m., Monday through Friday, except Federal holidays. Comments may also be sent via the Internet using the following address: *9-ane-adcomment@faa.gov*. Comments sent via the Internet must contain the docket number in the subject line.

The service information referenced in the proposed rule may be obtained from Rolls-Royce plc, P.O. Box 31 Derby, DE24 8BJ, United Kingdom; telephone 011–44–1332–242424; fax 011–44–1332–249936. This information may be examined, by appointment, at the FAA, New England Region, Office of the Regional Counsel, 12 New England Executive Park, Burlington, MA.

FOR FURTHER INFORMATION CONTACT: Antonio Cancelliere, Aerospace Engineer, Engine Certification Office, FAA, Engine and Propeller Directorate, 12 New England Executive Park, Burlington, MA 01803–5299; telephone (781) 238–7751; fax (781) 238–7199.

SUPPLEMENTARY INFORMATION:

Comments Invited

Interested persons are invited to participate in the making of the proposed rule by submitting such written data, views, or arguments as they may desire. Communications should identify the Rules Docket number and be submitted in triplicate to the address specified above. All communications received on or before the closing date for comments, specified above, will be considered before taking action on the proposed rule. The proposals contained in this action may be changed in light of the comments received.

Comments are specifically invited on the overall regulatory, economic, environmental, and energy aspects of the proposed rule. All comments submitted will be available, both before and after the closing date for comments, in the Rules Docket for examination by interested persons. A report summarizing each FAA-public contact concerned with the substance of this proposal will be filed in the Rules Docket.

Commenters wishing the FAA to acknowledge receipt of their comments submitted in response to this action must submit a self-addressed, stamped postcard on which the following statement is made: ''Comments to Docket Number 2001–NE–13–AD.'' The postcard will be date stamped and returned to the commenter.

Availability of NPRM's

Any person may obtain a copy of this NPRM by submitting a request to the FAA, New England Region, Office of the Regional Counsel, Attention: Rules Docket No. 2001–NE–13–AD, 12 New England Executive Park, Burlington, MA 01803–5299.

Discussion

A proposal to amend part 39 of the Federal Aviation Regulations (14 CFR part 39) to add an airworthiness directive (AD), applicable to RB211–535E4 series turbofan engines, was published as a notice of proposed rulemaking (NPRM) in the **Federal Register** on February 26, 2002 (67 FR 8739). That NPRM would have required disassembling and inspecting all engine mounts for cracks, refurbishing the engine mounts, and replacing the front mount thrust link spherical bearing. That NPRM was prompted by reports of corrosion and fatigue cracks in the mount pins, the spherical bearings, and the support links and their respective spherical bearings. That condition, if not corrected, could result in failure of the engine mounts due to cracks that could result in loss of an engine.

Since that NPRM was issued, the FAA has become aware that the Civil Aviation Authority (CAA), which is the aviation authority for the U.K., has cancelled AD 004–08–2000, which addresses the subject of the NPRM, and that RR has downgraded the category of Service Bulletin (SB) RB.211–71–5291, Revision 14, dated March 13, 2001, which required compliance of that SB in the NPRM, to recommended. RR has since issued a mandatory SB RB.211–71–D437, Revision 1, dated February 28, 2003, which introduces a serialized, life-limited, spherical bearing for the engine front mount housing and link support assembly and introduced the inspection requirements of the engine front and rear mounts in the Time Limit Manual. Therefore, the compliance with the requirements of the SB RB.211–71–5291 is no longer required.

The CAA has also issued AD 005–04–2002, dated April 2002, to mandate compliance with the new requirements as per the RR Service Bulletin (SB) RB.211–71–D437, Revision 1, dated February 28, 2003.

Since this change expands the scope of the originally proposed rule, the FAA has determined that it is necessary to reopen the comment period to provide additional opportunity for public comment.

Manufacturer's Service Information

The FAA has reviewed and approved the technical contents of RR SB RB.211–71–D437, Revision 1, dated February 28, 2003, that introduces new production engine front mount housing and link support assemblies and describes procedures for reworking existing engine front mount housing and link support assemblies by installing a new serialized bearing.

FAA's Determination of an Unsafe Condition and Proposed Actions

Since an unsafe condition has been identified that is likely to exist or develop on RR RB211–22B, RB211–524, and RB211–535 series turbofan engines installed on U.S. registered aircraft, the proposed AD would require the installation of a front engine mount housing and link support assembly that has a serialized, life limited spherical bearing installed, by either installing a new assembly or reworking the existing assembly. The actions must be done at the next Module 04 shop visit after the effective date of the AD but no later than April 1, 2011, in accordance with the MSB described previously.

Economic Analysis

There are approximately 2,214 RR RB211–22B, RB211–524, and RB211–535 series turbofan engines of the affected design in the worldwide fleet. The FAA estimates that about 620 RB211–535 engines, and about 45 RB211–524 and RB211–22B engines installed on airplanes of U.S. registry, would be affected by this proposed AD. The FAA also estimates that no additional labor costs would be incurred to perform the proposed actions. The FAA anticipates that the new hardware will be installed while the module is inducted into the shop for routine maintenance inspection before the compliance expiration date of this AD. The cost of a new serialized spherical bearing is approximately $592 for RB211–535 engines, $895 for RB211–524 engines, and $1,990 for RB211–22B engines. Based on these figures, the total cost of the proposed AD to U.S. operators is estimated to be $493,975.

Regulatory Analysis

This proposed rule does not have federalism implications, as defined in Executive Order 13132, because it would not have a substantial direct effect on the States, on the relationship between the national government and the States, or on the distribution of power and responsibilities among the various levels of government. Accordingly, the FAA has not consulted with state authorities prior to publication of this proposed rule.

For the reasons discussed above, I certify that this proposed regulation (1) is not a ''significant regulatory action'' under Executive Order 12866; (2) is not a ''significant rule'' under the DOT Regulatory Policies and Procedures (44

FR 11034, February 26, 1979); and (3) if promulgated, will not have a significant economic impact, positive or negative, on a substantial number of small entities under the criteria of the Regulatory Flexibility Act. A copy of the draft regulatory evaluation prepared for this action is contained in the Rules Docket. A copy of it may be obtained by contacting the Rules Docket at the location provided under the caption **ADDRESSES.**

List of Subjects in 14 CFR Part 39

Air transportation, Aircraft, Aviation safety, Safety.

The Proposed Amendment

Accordingly, pursuant to the authority delegated to me by the Administrator, the Federal Aviation Administration proposes to amend part 39 of the Federal Aviation Regulations (14 CFR part 39) as follows:

PART 39—AIRWORTHINESS DIRECTIVES

1. The authority citation for part 39 continues to read as follows:

Authority: 49 U.S.C. 106(g), 40113, 44701.

§ 39.13 [Amended]

2. Section 39.13 is amended by adding the following new airworthiness directive:

Rolls-Royce plc: Docket No. 2001–NE–13–AD.

Applicability This airworthiness directive (AD) is applicable to Rolls-Royce plc (RR) RB211–22B, RB211–524, and RB211–535 series turbofan engines. These engines are installed on, but not limited to Boeing 747, 757, 767, Lockheed L–1011, and Tupolev Tu204–120 airplanes.

Note 1: This AD applies to each engine identified in the preceding applicability provision, regardless of whether it has been modified, altered, or repaired in the area subject to the requirements of this AD. For engines that have been modified, altered, or repaired so that the performance of the requirements of this AD is affected, the owner/operator must request approval for an alternative method of compliance in accordance with paragraph (d) of this AD. The request should include an assessment of the effect of the modification, alteration, or repair on the unsafe condition addressed by this AD; and, if the unsafe condition has not been eliminated, the request should include specific proposed actions to address it.

Compliance

Compliance with this AD is required as indicated, unless already done.

To prevent failure of the front engine mount due to cracks, that could result in loss of the engine, do the following at the next Module 04 shop visit after the effective date of this AD, but no later than April 1, 2011:

(a) Replace existing engine front mount housing and link support assembly listed in Table 1 of this AD with new production part number (P/N) front mount housing and link support assembly, or with a reworked assembly, in accordance with paragraph 3 of Accomplishment Instructions of Mandatory Service Bulletin (MSB) No. RB211–71–D437, Revision 1, dated February 28, 2003. Table 1 follows:

TABLE 1.—FRONT MOUNT HOUSING AND LINK SUPPORT ASSEMBLY EXISTING P/NS AND REWORKED P/NS

Existing P/N	New production or reworked P/N
LK83038	FW18695
LK83047	FW18686
LK83057	FW18691
LK83072	FW18696
LK83110	FW18697
LK83114	FW18698
UL10472	FW18694
UL25694	FW18688
UL27054	FW18687
UL27601	FW18693
UL27612	FW18689
UL27613	FW18684

(b) Mark the Modules 04 after the rework with new P/N as specified in the following Table 2:

TABLE 2.—MODULE 04 REWORKED P/N

Existing P/N	Reworked P/N
MO7127	MO7159
MO7130	MO7156
MO7133	MO7153
MO7134	MO7152
MO7135	MO7154
MO7149	MO7158
MO7150	MO7155
MO7151	MO7157
MO7202	MO7214
MO7206	MO7216
MO7207	MO7215
MO7208	MO7213

(c) Information on engine front mount housing and link support assembly disassembly, inspection, replacement of the time limited spherical bearing, and reassembly, can be found in RR Engine Manual, section 71–21–01.

Alternative Methods of Compliance

(d) An alternative method of compliance or adjustment of the compliance time that provides an acceptable level of safety may be used if approved by the Manager, Engine Certification Office (ECO). Operators must submit their request through an appropriate FAA Principal Maintenance Inspector, who may add comments and then send it to the Manager, ECO.

Note 2: Information concerning the existence of approved alternative methods of compliance with this airworthiness directive, if any, may be obtained from the ECO.

Special Flight Permits

(e) Special flight permits may be issued in accordance with §§ 21.197 and 21.199 of the Federal Aviation Regulations (14 CFR 21.197 and 21.199) to operate the airplane to a location where the requirements of this AD can be done.

Note 3: The subject of this AD is addressed in CAA airworthiness directive 005–04–2002, dated April 2002.

Issued in Burlington, Massachusetts, on July 24, 2003.

Francis A. Favara,

Acting Manager, Engine and Propeller Directorate, Aircraft Certification Service.

[FR Doc. 03–19482 Filed 7–30–03; 8:45 am]

BILLING CODE 4910–13–P

DEPARTMENT OF THE TREASURY

Internal Revenue Service

26 CFR Part 1

[REG–131997–02]

RIN 1545–BA85

Section 42 Carryover and Stacking Rule Amendments; Hearing

AGENCY: Internal Revenue Service (IRS), Treasury.

ACTION: Change of location of public hearing.

SUMMARY: This document changes the location of a public hearing on proposed regulations relating to section 42 carryover and stacking rules.

DATES: The public hearing scheduled in room 2615 on Tuesday, September 23, 2003 is rescheduled to be held in room 4718 at 10 a.m.

FOR FURTHER INFORMATION CONTACT: Concerning submissions of comments, the hearing, and/or to be placed on the building access list to attend the hearing, contact Guy R. Traynor at (202) 622–3693 (not a toll-free number).

SUPPLEMENTARY INFORMATION: A notice of proposed rulemaking and notice of public hearing that was published in the **Federal Register** on July 7, 2003 (68 FR 40218), announced that a public hearing on proposed regulations relating to section 42 carryover and stacking rules, would be held on Tuesday, September 23, 2003, beginning at 10 a.m., in room 2615 of the Internal Revenue Building, 1111 Constitution Avenue NW., Washington, DC.

The location of the public hearing has changed. The public hearing for proposed regulations (REG–131997–02) will be held in room 4718, beginning at 10 a.m., in the Internal Revenue Building, 1111 Constitution Avenue

NW., Washington, DC. Because of controlled access restrictions, attendees are not admitted beyond the lobby of the Internal Revenue Building until 9:30 a.m. The IRS will prepare an agenda showing the scheduling of the speakers after the outlines are received from the persons testifying and make copies available free of charge at the hearing.

Cynthia E. Grigsby,

Chief, Regulations Unit, Associate Chief Counsel, (Procedure & Administration).

[FR Doc. 03–19538 Filed 7–30–03; 8:45 am]

BILLING CODE 4830–01–P

DEPARTMENT OF THE TREASURY

Internal Revenue Service

26 CFR Part 301

[REG–208199–91]

RIN 1545–BC55

Suspension of Running of Period of Limitations During a Proceeding To Enforce or Quash a Designated or Related Summons

AGENCY: Internal Revenue Service (IRS), Treasury.

ACTION: Notice of proposed rulemaking.

SUMMARY: This document contains proposed regulations regarding the use of designated summonses and related summonses and the effect on the period of limitations on assessment when a case is brought with respect to a designated or related summons. These proposed regulations reflect changes to section 6503 of the Internal Revenue Code of 1986 made by the Omnibus Budget Reconciliation Act of 1990 and the Small Business Job Protection Act of 1996. This regulation affects corporate taxpayers that are examined under the coordinated issue case (CIC) program and are served with designated or related summonses. This regulation also affects third parties that are served with designated or related summonses for information pertaining to the corporate examination.

DATES: Written or electronic comments and requests for a public hearing must be received by October 29, 2003.

ADDRESSES: Send submissions to: CC:PA:RU (REG–208199–91), room 5203, Internal Revenue Service, POB 7604, Ben Franklin Station, Washington, DC 20044. Submissions may be hand delivered between the hours of 8 a.m. and 4 p.m. to: CC:PA:RU (REG–208199–91), Courier's Desk, Internal Revenue Service, 1111 Constitution Avenue NW., Washington, DC. Taxpayers may also submit electronic comments directly to the IRS Internet site at *www.irs.gov/regs.*

FOR FURTHER INFORMATION CONTACT: Elizabeth Rawlins, (202) 622–3630 (not a toll-free number).

SUPPLEMENTARY INFORMATION:

Background

This document contains proposed regulations amending the Procedure and Administration Regulations (26 CFR part 301) under section 6503 of the Internal Revenue Code of 1986. Section 11311 of the Omnibus Budget Reconciliation Act of 1990 (Public Law 101–508, 104 Stat. 1388) (1990 Act) amended section 6503(k) to suspend the period of limitations on assessment when a case is brought with respect to a designated or related summons. Section 6503(k) was redesignated as section 6503(j) by section 1702(h)(17)(A) of the Small Business Job Protection Act of 1996 (Public Law 104–188, 110 Stat. 1874).

Explanation of Provisions

These proposed regulations generally provide that the period of limitations on assessment provided for in section 6501 is suspended with respect to any return of tax by a corporation that is the subject of a designated or related summons if a court proceeding to enforce or quash is instituted with respect to that summons.

Designated Summonses and Related Summonses

A designated summons is a summons issued to determine the amount of any internal revenue tax of a corporation for which a return was filed if certain additional requirements are satisfied. A designated summons may only be issued to a corporation (or any other person to whom such corporation has transferred records) if the corporation is being examined under the IRS' coordinated examination program ''or any successor program.'' The existing successor program to the coordinated examination program is the coordinated issue case (CIC) program.

Section 6503(j)(2)(A)(i) requires that the issuance of the summons be preceded by a review by the regional counsel of the Office of Chief Counsel for the region in which the examination of the corporation is being conducted. Because the prior regional structure of the IRS no longer exists, these proposed regulations provide that the review must by completed by the Division Commissioner and the Division Counsel of the Office of Chief Counsel for the organizations that have jurisdiction over the corporation whose liability is the subject of the summons. The summons also must be issued at least 60 days before the day on which the statute of limitations on assessment under section 6501 would otherwise expire. Finally, the summons must clearly state that it is a designated summons for purposes of section 6503(j).

A related summons is any other summons that is issued with respect to the same tax return of the corporation as a designated summons and is issued during the 30-day period that begins on the date the designated summons is issued.

Suspension of Period of Limitations on Assessment

Section 6503(j)(1) suspends the period of limitations on assessment under section 6501 for the applicable tax period when a court proceeding is brought with respect to a designated or related summons. For purposes of these proposed regulations, a court proceeding is a proceeding brought in a United States district court either to quash a designated or related summons under section 7609(b)(2) or to enforce a designated or related summons under section 7604. The court proceeding must be brought within the otherwise applicable period of limitations in order to suspend that period under section 6503(j).

The proposed regulations provide that the suspension begins on the day that a court proceeding is brought and continues until there is a final resolution as to the summoned party's response to the summons (discussed in the next section), plus an additional 120 days if the court requires any compliance with the summons at issue. If the court does not require any compliance, then the period of limitations on assessment resumes running on the day following the date of the final resolution and in no event shall expire before the 60th day following the date of final resolution.

Final Resolution of a Summoned Party's Response to a Summons

Under section 6503(j)(3)(B), the length of the suspension under section 6503(j) depends on when ''final resolution'' of a summoned party's response to the designated or related summons occurs. The term ''final resolution'' is not defined in the statute. The legislative history to the 1990 Act states that the term ''final resolution'' has the same meaning it has under section 7609(e)(2)(B), relating to third-party summonses. H.R. Conf. Rep. No. 101–964 (1990). Specifically, the conference report to the 1990 Act states that final resolution means that no court proceeding remains pending and that the summoned party has complied with

the summons to the extent required by the court.

Accordingly, the proposed regulations provide that final resolution occurs when the summoned party complies with a summons to the extent required by the court and all court proceedings and times for appeals applicable to those proceedings have terminated. If the summoned party has complied with the summons to the extent required by a court but there still remains time to appeal that order, final resolution occurs when the time for appeal has expired. (Were final resolution deemed to occur before that point, the period of limitations on assessment might resume running even though a later order after appeal might require additional compliance.) If all appeal periods have expired but the summoned party has not complied with the summons to the extent required by the court order, the proposed regulations provide that final resolution does not occur until the summoned party has complied with the summons to the extent required by the court order.

Whether a party has complied with the terms of the summons as enforced by the court cannot be determined until the completeness of the materials produced and the testimony given have been evaluated. In cases where the court wholly denies enforcement or orders that the summons in its entirety be quashed, the date of compliance with the court's order is treated as occurring on the date when all appeals are disposed of or when all appeal periods expire.

In cases where the court orders the summons enforced in whole or in part, the determination of whether the summoned party has complied with the order will be made by the Commissioner or his delegate (Commissioner). This determination will be made as soon as practicable after the summoned party has given testimony or produced books, papers, records, or other data as required by the court order. Notification of a favorable determination, and the date of such determination, will be made in writing and sent to the summoned party (and the taxpayer if the taxpayer is not the summoned party) within five days after the date the determination is made. If the period to appeal the court's order has already run, the date of the favorable determination shall be the date of final resolution for purposes of determining the length of the suspension under section 6503(j).

The proposed regulations provide that the Commissioner is not required to give notice that the court's order has not been complied with prior to instituting a collateral proceeding challenging whether the testimony given or the production made by the summoned party fully satisfies the court order and requesting that sanctions be imposed against the summoned party for a failure to testify or produce. The proposed regulations further provide that if such a collateral proceeding is instituted, then the collateral proceeding shall be treated as a continuation of the original proceeding.

Statement of Compliance

A summoned party also may request a determination from the IRS that it has fully complied with a designated or related summons to the extent required by court order. Under this procedure, if the summoned party believes that it has complied, the summoned party may submit a written statement (statement of compliance) to the IRS that the summoned party has fully complied with the court order. The statement of compliance must be properly addressed and sent by registered or certified mail. The statement of compliance must contain the summoned party's current contact information and information specifically identifying the applicable summons and court order.

To prevent the filing of premature or repetitious statements of compliance, the proposed regulations provide that a statement of compliance will be disregarded as a nullity if it is submitted before production or the giving of testimony (or the last act of production when there is a mutual agreement that production will be accomplished in stages) or before the IRS has responded to a previously-submitted statement of compliance. A statement of compliance also will be treated as a nullity if it is submitted by the summoned party while a referral to the Department of Justice for a collateral proceeding with respect to the court order or an appeal of the court order is pending.

Unless the IRS, within 180 days of the receipt of a statement of compliance, or within the time agreed to by the IRS and the summoned party, mails to the summoned party by registered or certified mail notification that it has not fully satisfied the designated or related summons, the summons will be treated as having been fully complied with as of the 180th day following the date the IRS received the statement. The date on which the statement of compliance was mailed by registered or certified mail will be treated as the date on which the IRS received the statement.

Other Rules

These proposed regulations provide additional rules regarding the number of designated and related summonses that may be issued with respect to a return for any taxable period, the time within which a court proceeding must be brought to enforce or quash a designated or related summons, the computation of the suspension period in cases of multiple court proceedings, and the computation of the 60-day period for assessment when the last day falls on a weekend or holiday.

The proposed regulations also address the relationship of the suspension period provided for in section 6503(j) with other suspension provisions in the Code. The proposed regulations first provide that if a designated or related summons also could be subject to the suspension rules governing third-party summonses under section 7609(e), then the suspension rules in section 6503(j) govern. In addition, the section 6503(j) suspension period is independent of, and may run concurrently with, any other period of suspension, such as the suspension period for third-party summonses under section 7609(e) if a separate third-party summons also was issued in a case. Examples of these rules are contained in the proposed regulations.

Proposed Effective Date

These regulations are proposed to be applicable on the date final regulations are published in the **Federal Register**.

Special Analyses

It has been determined that this notice of proposed rulemaking is not a significant regulatory action as defined in Executive Order 12866. Therefore, a regulatory assessment is not required. It also has been determined that section 553(b) of the Administrative Procedure Act (5 U.S.C. chapter 5) and the Regulatory Flexibility Act (5 U.S.C. chapter 6) do not apply to these regulations, and, therefore, a Regulatory Flexibility Analysis is not required. Pursuant to section 7805(f) of the Code, this notice of proposed rulemaking will be submitted to the Chief Counsel for Advocacy of the Small Business Administration for comment on its impact on small business.

Comments and Requests for a Public Hearing

Before these proposed regulations are adopted as final regulations, consideration will be given to any written comments (a signed original and eight (8) copies) or electronic comments that are submitted timely to the IRS. The IRS and the Treasury Department request comments on the clarity of the proposed rules and how they can be made easier to understand. All comments will be available for public

inspection and copying. A public hearing may be scheduled if requested in writing by a person who timely submits written comments. If a public hearing is scheduled, notice of the date, time, and place for the hearing will be published in the **Federal Register**.

Drafting Information

The principal author of these regulations is Elizabeth Rawlins of the Office of the Associate Chief Counsel, Procedure and Administration (Collection, Bankruptcy and Summonses Division), IRS. However, other personnel from the IRS and the Treasury Department participated in their development.

Lists of Subjects in 26 CFR Part 301

Employment taxes, Estate taxes, Excise taxes, Gift taxes, Income taxes, Penalties, Reporting and recordkeeping requirements.

Proposed Amendments to the Regulations

Accordingly, 26 CFR part 301 is proposed to be amended as follows:

PART 301—PROCEDURE AND ADMINISTRATION

Paragraph 1. The authority citation for part 301 continues to read in part as follows:

Authority: 26 U.S.C. 7805 * * *

Par. 2. Section 301.6503(j)–1 is added to read as follows:

§ 301.6503(j)–1 Suspension of running of period of limitations; extension in case of designated and related summonses.

(a) *General rule.* The running of the applicable period of limitations on assessment provided for in section 6501 is suspended with respect to any return of tax by a corporation that is the subject of a designated or related summons if a court proceeding is instituted with respect to that summons.

(b) *Period of suspension.* The period of suspension is the time during which the running of the applicable period of limitations on assessment provided for in section 6501 is suspended under section 6503(j). If the court requires any compliance with a designated or related summons by ordering that any record, document, paper, object, or items be produced, or the testimony of any person be given, the period of suspension consists of the judicial enforcement period plus 120 days. If the court does not require any compliance with a designated or related summons, the period of suspension consists of the judicial enforcement period, and the period of limitations on assessment provided in section 6501 shall not expire before the 60th day after the judicial enforcement period.

(c) *Definitions*—(1) *Designated summons.* A designated summons is a summons issued to a corporation (or to any other person to whom the corporation has transferred records) with respect to any return of tax by such corporation for a taxable period for which such corporation is being examined under the coordinated industry case program or any other successor to the coordinated examination program—

(i) If the Division Commissioner and the Division Counsel of the Office of Chief Counsel (or their successors) for the organizations that have jurisdiction over the corporation whose tax liability is the subject of the summons have reviewed the summons before it is issued;

(ii) If the IRS issues the summons at least 60 days before the day the period prescribed in section 6501 for the assessment of tax expires (determined with regard to extensions); and

(iii) If the summons states that it is a designated summons for purposes of section 6503(j).

(2) *Related summons.* A related summons is any summons issued that—

(i) Relates to the same return of the corporation under examination as the designated summons; and

(ii) Is issued to any person, including the person to whom the designated summons was issued, during the 30-day period that begins on the day the designated summons is issued.

(3) *Judicial enforcement period.* The judicial enforcement period is the period that begins on the day on which a court proceeding is instituted with respect to a designated or related summons and ends on the day on which there is a final resolution as to the summoned person's response to that summons.

(4) *Court proceeding*—(i) *In general.* For purposes of this section, a court proceeding is a proceeding filed in a United States district court either to quash a designated or related summons under section 7609(b)(2) or to enforce a designated or related summons under section 7604 and includes any collateral proceeding to that proceeding such as a civil contempt proceeding.

(ii) *Date when proceeding is no longer pending.* A proceeding to quash or to enforce a designated or related summons is no longer pending when all appeals are resolved, or after the expiration of the period in which an appeal may be taken or a request for further review may be made. If, however, following an enforcement order, a collateral proceeding is brought challenging whether the testimony given or production made by the summoned party fully satisfied the court order and whether sanctions should be imposed against the summoned party for a failure to so testify or produce, the proceeding to quash or to enforce the summons shall include the time from which the proceeding to quash or to enforce the summons was brought until the decision in the collateral proceeding becomes final. The decision becomes final on the date when all appeals are disposed of or when the period in which an appeal may be taken or a request for further review may be made expires. Any collateral proceeding to the original proceeding shall be considered to be a continuation of the original proceeding.

(5) *Compliance*—(i) *In general.* Compliance is the giving of testimony or the performance of an act or acts of production, or both, in response to a court order concerning the designated or related summons and the determination that the terms of the court order have been satisfied.

(ii) *Date compliance occurs.* Compliance with a court order that wholly denies enforcement of a designated or related summons is deemed to occur on the date when all appeals are disposed of or when the period in which an appeal may be taken or a request for further review may be made expires. Compliance with a court order that grants enforcement, in whole or in part, of a designated or related summons, occurs on the date the Commissioner or his delegate (Commissioner) determines that the testimony given, or the books, papers, records, or other data produced, or both, by the summoned party fully satisfy the court order concerning the summons. The determination whether there has been compliance will be made as soon as practicable after the testimony is given or the materials are produced.

(6) *Final resolution.* Final resolution means that compliance with a court order concerning the designated or related summons has occurred and that court proceedings are no longer pending.

(d) *Special rules*—(1) *Number of summonses that may be issued*—(i) *Designated summons.* Only one designated summons may be issued in connection with the examination of a specific taxable year or other period of a corporation. A designated summons may cover more than one year or other period of a corporation. The designated summons may seek information that was previously sought in a summons

(other than a designated summons) that was issued in the course of the examination of that particular corporation.

(ii) *Related summonses.* There is no restriction on the number of related summonses that may be issued in connection with the examination of a corporation. As provided in paragraph (c)(2) of this section, however, a related summons must be issued within the 30-day period that begins on the date on which the designated summons to which it relates is issued and must relate to the same return as the designated summons. A related summons may request the same information as the designated summons.

(2) *Time within which court proceedings must be brought.* In order for the period of limitations on assessment to be suspended under section 6503(j), a court proceeding to enforce or to quash a designated or related summons must be instituted within the period of limitations on assessment provided in section 6501 otherwise applicable to that tax return.

(3) *Computation of suspension period if multiple court proceedings are instituted.* If multiple court proceedings are instituted to enforce or to quash a designated or one or more related summonses concerning the same tax return, the period of limitations on assessment is suspended for the entire period beginning on the day the first court proceeding is brought and ending on the last day of the last-ending suspension period resulting from the court proceedings that were brought.

(4) *Effect on other suspension periods*—(i) *In general.* The periods of suspension on the running of the period of limitations under section 6501 provided for under sections 7609(e)(1) and (2) are not applicable with respect to any summons that is issued pursuant to section 6503(j). The suspension under section 6503(j) on the running of the period of limitations on assessment under section 6501 is independent of, and may run concurrent with, any other period of suspension of the period of limitations on assessment applicable to the tax return to which the designated or related summons relates.

(ii) *Examples.* The rules of paragraph (d)(4)(i) of this section are illustrated by the following examples:

Example 1. The period of limitations on assessment against Corporation P for its calendar 1997 return is scheduled to end on March 15, 2001. On January 3, 2001, a designated summons is issued to Corporation P concerning its 1997 return. On March 1, 2001 (14 days before the period of limitations on assessment would otherwise expire with respect Corporation P's 1997 tax return), a court proceeding is brought to enforce the designated summons issued to Corporation P. On June 5, 2001, the court orders Corporation P to comply with the designated summons. Corporation P does not appeal the court's order. On September 3, 2001, agents for Corporation P deliver material that they state are the records requested by the designated summons. On October 15, 2001, a final resolution to Corporation P's response to the designated summons occurs when the Commissioner determines that Corporation P has fully complied with the court's order. The suspension period applicable with respect to the designated summons issued to Corporation P consists of the judicial enforcement period (March 1, 2001, through October 15, 2001) and an additional 120-day period under section 6503(j)(1)(B), because the court required Corporation P to comply with the designated summons. Thus, the suspension period applicable with respect to the designated summons issued to Corporation P would begin on March 1, 2001, and end on February 12, 2002. Under the facts of this example, the period of limitations on assessment against Corporation P would be extended to February 26, 2002, to account for the additional 14 days that remained on the period of limitations on assessment under section 6501 when the suspension period under section 6503(j) began.

Example 2. Assume the same facts set forth in *Example 1.* On April 3, 2001, a summons concerning Corporation P's calendar 1997 return is issued and served on individual A, a third party. This summons is not a related summons because it was not issued during the 30-day period that began on the date the designated summons was issued. The third-party summons served on individual A is subject to the notice requirements of section 7609(a). If there is no final resolution of individual A's response to this summons by October 3, 2001, *i.e.*, six months from the date of service of the summons, the period of limitations on assessment against Corporation P would be suspended under section 7609(e)(2) to the date on which there is a final resolution to that response for the purposes of section 7609(e)(2). If a final resolution to the summons served on individual A occurs after February 12, 2002, the end of the suspension period for the designated summons, the period of limitations on assessment against Corporation P expires 14 days after the date that the final resolution as provided for in section 7609(e)(2) occurs with respect to the summons served on individual A.

(5) *Computation of 60-day period when last day of assessment period falls on a weekend or holiday.* For purposes of paragraph (c)(1)(ii) of this section, in determining whether a designated summons has been issued at least 60 days before the date on which the period of limitations on assessment prescribed in section 6501 expires, the provisions of section 7503 apply when the last day of the assessment period falls on a Saturday, Sunday, or legal holiday.

(6) *Determination of compliance with designated and related summonses if a court proceeding has been instituted*—(i) *In general.* The Commissioner will determine, in an expeditious manner, whether a summoned party has fully complied with any court order if the designated or related summons is the subject of a court proceeding to quash or to enforce. The determination will be made as soon as practicable after the later of—

(A) The giving of any testimony required to be given by a summoned party; or

(B) The act of production (or the last act of production in the case of production that is accomplished in parts or in stages pursuant to a mutual agreement between the summoned party and the Commissioner) by the summoned party.

(ii) *Procedure for a favorable determination.* If the Commissioner determines that the summoned party has fully complied with the court order, the Commissioner will mail notice of that determination within 5 business days after the date of the determination, which will be sent by certified or registered mail, to the summoned party and the taxpayer under examination (if the taxpayer is not the summoned party).

(iii) *Notification of favorable determination.* The written notification that the summoned party has fully complied with the court order will contain the following information—

(A) The name and address of the summoned party;

(B) The name, address, type of tax, and taxable period of the taxpayer corporation with respect to which testimony or records, or both, were sought by the summons; and

(C) The date on which the Commissioner made the determination that the summoned party fully complied with court order.

(iv) *Effective date of favorable determination.* The Commissioner's determination that the summoned party has fully complied with the court order will be effective on the date the determination is stated to have been made in the written notification sent to the summoned party.

(7) *Statement of compliance with a court order*—(i) *In general.* In the case of a court order to which paragraph (d)(6)(i) of this section applies, the summoned party may submit a statement in writing that the summoned party has fully complied with the court order to the office identified on the summons (marked for the attention of the Internal Revenue Service employee

who issued the summons to which the order relates).

(ii) *Form.* The statement of compliance shall be sent by registered or certified mail and shall include—

(A) The name, current address, current home and work telephone numbers of the person making the statement and any convenient times that person can be contacted;

(B) A specific identification of the court order with which compliance has been achieved and the summons to which the order relates; and

(C) The signature of the summoned party or the duly authorized representative.

(iii) *Response.* (A) As soon as practicable after receipt of such a statement of compliance, but in no event later than 180 days after such receipt, the Commissioner will mail a response to the summoned party (and a copy of the response to the taxpayer, if the summoned party is not the taxpayer) by registered or certified mail. The date on which the summoned person mails the statement of compliance shall be deemed to be the date on which the Commissioner receives it. The Commissioner's response will notify the summoned party—

(*1*) That a determination of compliance with the court order has been made and the date of that determination; or

(*2*) That a determination of noncompliance has been made and the date of that determination.

(B) The Commissioner is not required to give notice that the court order has not been complied with prior to instituting a collateral proceeding challenging whether the testimony given or the production made by the summoned party fully satisfies the court order and requesting that sanctions be imposed against the summoned party for a failure to comply with the order. The institution of a collateral proceeding shall constitute notice of a determination of noncompliance.

(C) The summoned party may, in writing, grant the Commissioner additional time within which to notify it regarding compliance or noncompliance with the summons.

(iv) *Failure to respond within 180 days.* If the Commissioner fails to respond to a properly submitted statement of compliance within the 180-day period, described in paragraph (d)(7)(iii)(A) of this section, or such longer period as agreed to in writing by the summoned party, then the court order with respect to which the summoned party submitted a statement of compliance shall be deemed complied with as of the expiration of 180 days or such longer period.

(v) *Limitations.* The Commissioner may treat as a nullity and return to the summoned party without action, as described in paragraph (d)(7)(iii) of this section, a statement of compliance that is filed in the following circumstances—

(A) Before the summoned party has provided testimony, or books, papers, records, or other data, or both in response to the court order (or before the last act of production in the case of production that is accomplished in stages pursuant to a mutual agreement);

(B) Before the Commissioner has issued a determination pursuant to paragraph (d)(7)(iii) of this section with respect to a previously-tendered statement of compliance or before the expiration of 180 days from the date such statement of compliance was received by the Commissioner, whichever is earlier; or

(C) While a referral to the Department of Justice for a collateral proceeding with respect to the court order or an appeal of that order is pending.

(e) *Effective date.* This section is applicable on the date final regulations are published in the **Federal Register**.

Robert E. Wenzel,

Deputy Commissioner of Internal Revenue.

[FR Doc. 03–19537 Filed 7–30–03; 8:45 am]

BILLING CODE 4830–01–P

DEPARTMENT OF THE INTERIOR

Minerals Management Service

30 CFR Parts 250 and 254

Oil and Gas and Sulphur Operations in the Outer Continental Shelf—Incident Reporting; Notice of Meeting

AGENCY: Minerals Management Service (MMS), Interior.

ACTION: Notice of meeting.

SUMMARY: This notice announces that MMS and the U.S. Coast Guard (USCG) will hold a public meeting to discuss the Notice of Proposed Rulemaking (NPR) for Incident Reporting Requirements that was published on July 8, 2003 (68 FR 40585).

DATES: The meeting will be held on September 3, 2003, from 1 p.m. to approximately 4 p.m. at the location listed in the **ADDRESSES** section.

ADDRESSES: The meeting will be held at the MMS Gulf of Mexico Regional office (Room 111), 1201 Elmwood Park Blvd., New Orleans, LA 70123. Please submit pre-meeting written questions by mail or fax to Melinda Mayes at:

(1) *Mailing address:* Minerals Management Service, 381 Elden Street, MS 4022, Herndon, VA 20170.

(2) *Fax number:* (703) 787–1555.

FOR FURTHER INFORMATION CONTACT: Melinda Mayes, MMS, Engineering and Operations Division, at (703) 787–1063 or Staci Atkins, MMS, Engineering and Operations Division, at (703) 787–1620.

SUPPLEMENTARY INFORMATION: The purpose of the meeting is to explain the Proposed Rule for Incident Reporting Requirements and allow participants to ask questions. On July 8, 2003, MMS published a proposed rule for Oil and Gas and Sulphur Operations in the Outer Continental Shelf—Incident Reporting (68 FR 40585). In developing this NPR, MMS worked with the USCG with the goal of making the reporting requirements between the two agencies more consistent. The MMS and USCG are also developing an electronic reporting system to help eliminate duplicative reporting between the two agencies.

The agenda for the meeting on September 3, 2003, is as follows:

- General welcome and overview from MMS and the USCG;
- Presentation of the rulemaking history and relationship of the MMS NPR to USCG requirements;
- Presentation of the MMS NPR;
- Question and answer session; and
- Concluding remarks.

The MMS and USCG encourage you to submit questions in advance and attend the meeting. We will consider your questions in preparing our presentations so we can focus on key topics. Questions must reach the MMS office by close of business on August 22, 2003. You may also pose questions during the question and answer session at the meeting.

We remind meeting participants that any comments you make at the meeting that you wish for us to consider during the rulemaking must be submitted in writing before the comment period closes.

There is no fee to attend the meeting and registration is not required. To obtain information on facilities or services for individuals with disabilities or to request that we provide special assistance at the meeting, please contact Melinda Mayes as soon as possible.

Dated: July 25, 2003.

E.P. Danenberger,

Chief, Engineering and Operations Division.

[FR Doc. 03–19458 Filed 7–30–03; 8:45 am]

BILLING CODE 4310–MR–P

DEPARTMENT OF THE INTERIOR

Minerals Management Service

30 CFR Parts 250 and 254

RIN 1010–AC57

Oil and Gas and Sulphur Operations in the Outer Continental Shelf—Incident Reporting Requirements

AGENCY: Minerals Management Service (MMS), Interior.

ACTION: Extension of comment period for proposed rule.

SUMMARY: This document extends to December 5, 2003, the previous deadline of October 6, 2003, for submitting comments on the proposed rule published on July 8, 2003, (68 FR 40585), that describes MMS Incident Reporting Requirements.

DATES: We will consider all comments received by December 5, 2003, and we may not fully consider comments received after December 5, 2003.

ADDRESSES: Mail or hand-carry written comments (three copies) to the Department of the Interior; Minerals Management Service; 381 Elden Street; Mail Stop 4024; Herndon, Virginia 20170–4817; Attention: Rules Processing Team.

FOR FURTHER INFORMATION CONTACT: Melinda Mayes, MMS Engineering and Operations Division, Herndon, VA, at (703) 787–1063 or Staci Atkins, MMS Engineering and Operations Division, Herndon, VA, at (703) 787–1620.

SUPPLEMENTARY INFORMATION: The MMS published a proposed rulemaking on July 8, 2003 (68 FR 40585) to revise the requirements for lessees/operators to report incidents associated with Outer Continental Shelf activities. In developing this Notice of Proposed Rulemaking, MMS worked with the U.S. Coast Guard (USCG) with the goal of making the reporting requirements between the two agencies consistent. The MMS and USCG also are developing an electronic reporting system to help eliminate duplicative reporting between the two agencies.

In a letter to MMS dated July 14, 2003, the International Association of Drilling Contractors has requested that we extend the comment period. The IADC stated that the additional time was necessary to develop their response and coordinate it with their sister trade associations, particularly in view of the time that must also be devoted to the recent Maritime Security rules issued by the USCG.

On September 3, 2003, MMS and the USCG will hold a meeting to explain the proposed rule and allow meeting participants to ask questions. The original proposed rule comment due date is just over one month after this meeting. We believe that additional time to develop comments after the meeting should be provided. Therefore, we are extending the comment period for 60 days and this notice extends the comment period to December 5, 2003.

Public Comments Procedures

Our practice is to make comments, including names and home addresses of respondents, available for public review during regular business hours. Individual respondents may request that we withhold their home address from the rulemaking record, which we will honor to the extent allowable by law. There may be circumstances in which we would withhold from the rulemaking record a respondent's identity, as allowable by law. If you wish us to withhold your name and/or address, you must state this prominently at the beginning of your comment. However, we will not consider anonymous comments. We will make all submissions from organizations or businesses, and from individuals identifying themselves as representatives or officials of organizations or businesses, available for public inspection in their entirety.

Dated: July 25, 2003.

E.P. Danenberger,

Chief, Engineering and Operations Division.

[FR Doc. 03–19459 Filed 7–30–03; 8:45 am]

BILLING CODE 4310–MR–P

DEPARTMENT OF THE INTERIOR

Office of Surface Mining Reclamation and Enforcement

30 CFR Part 948

[WV–091–FOR]

West Virginia Regulatory Program

AGENCY: Office of Surface Mining Reclamation and Enforcement (OSM), Interior.

ACTION: Proposed rule; reopening of public comment period.

SUMMARY: We are reopening the comment period to provide the public an opportunity to review and comment on a document submitted by the State of West Virginia which further clarifies a proposed amendment to the State's regulatory program under the Surface Mining Control and Reclamation Act of 1977 (SMCRA or the Act). The program amendment consists of changes to the West Virginia Surface Mining Reclamation Regulations as contained in House Bill 2663. The amendment is intended to improve the effectiveness of the West Virginia program.

DATES: We will accept written comments on this amendment until 4 p.m. (local time), on August 15, 2003.

ADDRESSES: You should mail or hand-deliver written comments to Mr. Roger W. Calhoun, Director, Charleston Field Office at the address listed below.

You may review copies of the West Virginia program, the amendment, the clarification document, and all written comments received in response to this document at the addresses listed below during normal business hours, Monday through Friday, excluding holidays. You may receive one free copy of the amendment and the State's clarification by contacting OSM's Charleston Field Office.

Mr. Roger W. Calhoun, Director, Charleston Field Office, Office of Surface Mining Reclamation and Enforcement, 1027 Virginia Street, East, Charleston, West Virginia 25301, Telephone: (304) 347–7158. E-mail: *chfo@osmre.gov.*

West Virginia Department of Environmental Protection, 10 McJunkin Road, Nitro, West Virginia 25143, Telephone: (304) 759–0510.

In addition, you may review copies of the proposed amendment and the related document during regular business hours at the following locations:

Office of Surface Mining Reclamation and Enforcement, Morgantown Area Office, 75 High Street, Room 229, PO Box 886, Morgantown, West Virginia 26507, Telephone: (304) 291–4004. (By Appointment Only)

Office of Surface Mining Reclamation and Enforcement, Beckley Area Office, 323 Harper Park Drive, Suite 3, Beckley, West Virginia 25801, Telephone: (304) 255–5265.

FOR FURTHER INFORMATION CONTACT: Mr. Roger W. Calhoun, Director, Charleston Field Office, Telephone: (304) 347–7158. Internet: *chfo@osmre.gov.*

SUPPLEMENTARY INFORMATION:

I. Background on the West Virginia Program
II. Description of the Proposed Amendment
III. Public Comment Procedures
IV. Procedural Determinations

I. Background on the West Virginia Program

Section 503(a) of the Act permits a State to assume primacy for the regulation of surface coal mining and reclamation operations on non-Federal and non-Indian lands within its borders by demonstrating that its program includes, among other things, ''* * *

State law which provides for the regulation of surface coal mining and reclamation operations in accordance with the requirements of the Act * * *; and rules and regulations consistent with regulations issued by the Secretary pursuant to the Act.'' See 30 U.S.C. 1253(a)(1) and (7). On the basis of these criteria, the Secretary of the Interior conditionally approved the West Virginia program on January 21, 1981. You can find background information on the West Virginia program, including the Secretary's findings, the disposition of comments, and conditions of approval of the West Virginia program in the January 21, 1981, **Federal Register** (46 FR 5915). You can also find later actions concerning West Virginia's program and program amendments at 30 CFR 948.10, 948.12, 948.13, 948.15, and 948.16.

II. Description of the Proposed Amendment

By letter dated May 2, 2001, the West Virginia Department of Environmental Protection (WVDEP) sent us a proposed amendment to its program (Administrative Record Number WV–1209) under SMCRA (30 U.S.C. 1201 *et seq.*). The program amendment consisted of changes to the West Virginia Surface Mining Reclamation Regulations at 38 Code of State Regulations (CSR) Series 2 as amended by House Bill 2663. The proposed amendment responded, in part, to the required program amendments codified in the Federal regulations at 30 CFR 948.16(xx), (qqq), (zzz), (ffff), (gggg), (hhhh), (jjjj), (nnnn), and (pppp). In order to expedite our review of the State's responses to the required amendments, we separated those amendments from the current amendment and we published our approval of those amendments in the **Federal Register** on May 1, 2002 (67 FR 21904).

On February 26, 2003, we sent the State a list of questions to help us better understand the remaining proposed amendments (Administrative Record Number WV–1365). The State responded by letter dated July 1, 2003 (Administrative Record Number WV–1365). The State's response is quoted below.

The following is additional clarification to Office of Surface Mining in answer to questions posed by OSM concerning the deletion of the definition for ''cumulative impact,'' the addition of a definition of ''material damage to the hydrologic balance outside the permit area,'' and the addition of a provision qualifying certain coal removal during reclamation as government financed construction exempt from a permit. These rules were passed in the 2001 Legislative session and were submitted to OSM as program amendments in May 2001. The rationale for these changes are to provide a narrative standard for reviewers to utilize when making findings relative to the hydrologic balance in and around the area of the proposed mining operation and to make the State delegated program language more similar to the Federal regulations.

[Material Damage and Cumulative Impact at CSR 38–2–3.22.e and CSR 38–2–2.39, respectively.]

The changes in the West Virginia Surface Mining Reclamation Rules relative to the added phrase defining ''material damage to the hydrologic balance outside the permit area'' and deleting the defined term ''cumulative impact'' are addressed together. These changes were made to set forth some objective criteria to use in making the determination required by SMCRA that a proposed operation has been designed to prevent material damage to the hydrologic balance outside the permit area. The added definition in the West Virginia rules provides a narrative standard, based upon use, for the reviewer to apply to make the required findings rather than leaving the threshold(s) to be assigned to the unguided discretion of an individual reviewer.

The Federal regulations at 30 CFR 773.15(e) requires [a determination that the proposed operation has been designed to prevent] material damage to the offsite hydrologic balance. The Federal program does not currently contain a standard, narrative or otherwise, to ascertain when such material damage would occur. Rather, the Federal program appears to leave this call to the discretion of the States. However, the Federal program does contain material damage criteria for the effects of mining associated with subsidence and alluvial valley floors based upon functionality and use (*See* 30 CFR 701.5). The definition submitted as a program amendment establishes a narrative threshold for material damage to the hydrologic balance, which is patterned after related definitions in the federal program, and is based upon the use of State waters. Additionally, the proposed definition is consistent with the administration and implementation of the State counterpart to the Clean Water Act in that the use of State waters established under the water program is recognized when the State SMCRA authority makes the assessment of cumulative hydrologic impacts.

Including the narrative threshold for material damage to the hydrologic balance obviates the need for the definition for ''cumulative impact.'' Even though the definition of ''cumulative impact'' is deleted, the defined term ''cumulative impact area'' remains. In addition, other sections of the WV rules require the applicant to show no material damage outside of the permit area and to assess the cumulative impacts within the cumulative impact area.

The reviewer of a proposal to conduct mining operations must delineate the area to be considered in assessing hydrologic consequences in accordance with the statute, rules and 1999 CHIA Writing Guidelines utilizing the actual or designated use and parameters designed to protect the same, as established by the WVDEP Division of Water Resources. The uses are outlined in the West Virginia Legislative rules 46CSR1 and include the propagation and maintenance of fish and other aquatic life. Water quality standards were designed to protect established uses. A review process wherein the SMCRA authority would develop or utilize thresholds/parameters for effluent discharges other than those established by the Clean Water Act program would likely result in interfering with the administration of the CWA. The WVDEP approach considers the numerical limits and water resource use designated by the water quality programs to make the assessment required by the mining program, thus precluding such interference.

[Exemption for Government-Financed Construction at CSR 38–2–3.31.c.]

The change to allow coal removal in conjunction with a reclamation project is designed to encourage/result in low cost or no-cost reclamation as provided for in the federal program (see 30 CFR 707.5). The state rule contains the same language as the federal regulations, except the State refers to the WV code and the federal counterpart refers to Title IV. The WV Code 22–3–28(e) is a subsection of 22–3–28. It is the only subsection that mentions government-financed reclamation. Therefore, it is obvious that subsection (e) is the only applicable subsection to which 38CSR2–3.31(c) could apply.

III. Public Comment Procedures

Under the provisions of 30 CFR 732.17(h), we are seeking your comments on whether the amendment, as further clarified in the State's clarification letter dated July 1, 2003, satisfies the applicable program

approval criteria of 30 CFR 732.15. If we approve the amendment, it will become part of the West Virginia program.

Written Comments

Send your written or electronic comments to OSM at the address given above. Your written comments should be specific, pertain only to the issues proposed in this rulemaking, and include explanations in support of your recommendations. We may not consider or respond to your comments when developing the final rule if they are received after the close of the comment period (*see* **DATES**). We will make every attempt to log all comments into the administrative record, but comments delivered to an address other than the Charleston Field Office may not be logged in.

Electronic Comments

Please submit Internet comments as an ASCII, Word file avoiding the use of special characters and any form of encryption. Please also include ''Attn: SATS NO. WV–091—FOR'' and your name and return address in your Internet message. If you do not receive a confirmation that we have received your Internet message, contact the Charleston Field office at (304) 347–7158.

Availability of Comments

We will make comments, including names and addresses of respondents, available for public review during normal business hours. We will not consider anonymous comments. If individual respondents request confidentiality, we will honor their request to the extent allowable by law. Individual respondents who wish to withhold their name or address from public review, except for the city or town, must state this prominently at the beginning of their comments. We will make all submissions from organizations or businesses, and from individuals identifying themselves as representatives or officials of organizations or businesses, available for public inspection in their entirety.

IV. Procedural Determinations

Executive Order 12630—Takings

This rule does not have takings implications. This determination is based on the analysis performed for the counterpart Federal regulation.

Executive Order 12866—Regulatory Planning and Review

This rule is exempt from review by the Office of Management and Budget under Executive Order 12866.

Executive Order 12988—Civil Justice Reform

The Department of the Interior has conducted the reviews required by section 3 of Executive Order 12988 and has determined that this rule meets the applicable standards of subsections (a) and (b) of that section. However, these standards are not applicable to the actual language of State regulatory programs and program amendments because each program is drafted and promulgated by a specific State, not by OSM. Under sections 503 and 505 of SMCRA (30 U.S.C. 1253 and 1255) and the Federal regulations at 30 CFR 730.11, 732.15, and 732.17(h)(10), decisions on proposed State regulatory programs and program amendments submitted by the States must be based solely on a determination of whether the submittal is consistent with SMCRA and its implementing Federal regulations and whether the other requirements of 30 CFR parts 730, 731, and 732 have been met.

Executive Order 13132—Federalism

This rule does not have Federalism implications. SMCRA delineates the roles of the Federal and State governments with regard to the regulation of surface coal mining and reclamation operations. One of the purposes of SMCRA is to ''establish a nationwide program to protect society and the environment from the adverse effects of surface coal mining operations.'' Section 503(a)(1) of SMCRA requires that State laws regulating surface coal mining and reclamation operations be ''in accordance with'' the requirements of SMCRA, and section 503(a)(7) requires that State programs contain rules and regulations ''consistent with'' regulations issued by the Secretary pursuant to SMCRA.

Executive Order 13175—Consultation and Coordination With Indian Tribal Governments

In accordance with Executive Order 13175, we have evaluated the potential effects of this rule on Federally recognized Indian tribes and have determined that the rule does not have substantial direct effects on one or more Indian tribes, on the relationship between the Federal Government and Indian tribes, or on the distribution of power and responsibilities between the Federal Government and Indian tribes. The basis for this determination is our decision is on a State regulatory program and does not involve a Federal regulation involving Indian lands.

Executive Order 13211—Regulations That Significantly Affect the Supply, Distribution, or Use of Energy

On May 18, 2001, the President issued Executive Order 13211 which requires agencies to prepare a Statement of Energy Effects for a rule that is (1) considered significant under Executive Order 12866, and (2) likely to have a significant adverse effect on the supply, distribution, or use of energy. Because this rule is exempt from review under Executive Order 12866 and is not expected to have a significant adverse effect on the supply, distribution, or use of energy, a Statement of Energy Effects is not required.

National Environmental Policy Act

This rule does not require an environmental impact statement because section 702(d) of SMCRA (30 U.S.C. 1292(d)) provides that agency decisions on proposed State regulatory program provisions do not constitute major Federal actions within the meaning of section 102(2)(C) of the National Environmental Policy Act (42 U.S.C. 4332(2)(C)).

Paperwork Reduction Act

This rule does not contain information collection requirements that require approval by OMB under the Paperwork Reduction Act (44 U.S.C. 3507 *et seq.*).

Regulatory Flexibility Act

The Department of the Interior certifies that this rule will not have a significant economic impact on a substantial number of small entities under the Regulatory Flexibility Act (5 U.S.C. 601 *et seq.*). The State submittal, which is the subject of this rule, is based upon counterpart Federal regulations for which an economic analysis was prepared and certification made that such regulations would not have a significant economic effect upon a substantial number of small entities. In making the determination as to whether this rule would have a significant economic impact, the Department relied upon the data and assumptions for the counterpart Federal regulations.

Small Business Regulatory Enforcement Fairness Act

This rule is not a major rule under 5 U.S.C. 804(2), the Small Business Regulatory Enforcement Fairness Act. This rule: (a) Does not have an annual effect on the economy of $100 million; (b) Will not cause a major increase in costs or prices for consumers, individual industries, Federal, State, or local government agencies, or geographic regions; and (c) Does not

have significant adverse effects on competition, employment, investment, productivity, innovation, or the ability of U.S.-based enterprises to compete with foreign-based enterprises. This determination is based upon the analysis performed under various laws and executive orders for the counterpart Federal regulations.

Unfunded Mandates

This rule will not impose an unfunded mandate on State, local, or tribal governments or the private sector of $100 million or more in any given year. This determination is based upon the analysis performed under various laws and executive orders for the counterpart Federal regulations.

List of Subjects in 30 CFR Part 948

Intergovernmental relations, Surface mining, Underground mining.

Dated: July 18, 2003.

Brent Wahlquist,

Regional Director, Appalachian Regional Coordinating Center.

[FR Doc. 03–19436 Filed 7–30–03; 8:45 am]

BILLING CODE 4310–05–P

DEPARTMENT OF VETERANS AFFAIRS

38 CFR Part 17

RIN 2900–AL60

Sensori-Neural Aids

AGENCY: Department of Veterans Affairs.

ACTION: Proposed rule.

SUMMARY: This document amends Department of Veterans Affairs (VA) medical regulations concerning sensori-neural aids. An existing regulation authorizes VA to provide sensori-neural aids (*i.e.*, eyeglasses, contact lenses, hearing aids) to seven specific groups of veterans identified in the regulation. The first four groups consist of veterans with the highest priority for care under VA's enrollment system, generally those with compensable service-connected disabilities, former prisoners of war, and those receiving increased VA pension based on their being housebound or in need of regular aid and attendance. Subsequent to promulgating the regulation, Congress changed the law to provide that veterans awarded the Purple Heart should have priority equal to former prisoners of war under VA's enrollment system. To be consistent, VA is proposing to amend the sensori-neural aids regulation to allow veterans in receipt of a Purple Heart to also receive sensori-neural aids.

DATES: Comments must be received on or before September 29, 2003.

ADDRESSES: Mail or hand-deliver written comments to: Director, Regulations Management (00REG1), Department of Veterans Affairs, 810 Vermont Ave., NW., Room 1064, Washington, DC 20420; or fax comments to (202) 273–9026; or e-mail comments to *OGCRegulations@mail.va.gov*. Comments should indicate that they are submitted in response to ''RIN 2900–AL60.'' All comments received will be available for public inspection in the Office of Regulation Policy and Management, Room 1158, between the hours of 8 a.m. and 4:30 p.m., Monday through Friday (except holidays). Please call (202) 273–9515 for an appointment.

FOR FURTHER INFORMATION CONTACT: Frederick Downs, Jr., Chief Consultant, Prosthetics and Sensory Aids Service Strategic Healthcare Group (113), Department of Veterans Affairs, 810 Vermont Avenue, NW., Washington, DC 20420, (202) 273–8515. (This is not a toll-free number.)

SUPPLEMENTARY INFORMATION: The ''Veterans' Health Care Eligibility Reform Act of 1996,'' Public Law No. 104–262 (Eligibility Reform Act) made major changes in the laws governing eligibility for VA health care benefits. That law amended 38 U.S.C. 1710, authorizing VA to furnish virtually all needed hospital care and medical services (*i.e.*, outpatient care) to veterans, including prosthetic devices and similar appliances. Prior to enactment of the Eligibility Reform Act, VA was generally prohibited from furnishing prosthetic devices and similar appliances on an outpatient basis. Although Congress expanded VA's authority to furnish veterans with prosthetic devices and similar appliances, it expressly provided in the law that with respect to sensori-neural aids (*i.e.*, eyeglasses, contact lenses, hearing aids), VA could exercise that authority only in accordance with guidelines prescribed by the Secretary. 38 U.S.C. 1707(b) (previously codified as 38 U.S.C. 1701(6)(A)(i)). The purpose of that proviso in the law was to permit VA to decide that it would not furnish eyeglasses and hearing aids to all veterans. In 1997, VA published an interim final rule establishing guidelines for the provision of sensori-neural aids. 62 FR 30240 (June 3, 1997). The final rule was effective on December 9, 1997 (62 FR 64722).

The Eligibility Reform Act also directed VA to establish a system of annual patient enrollment (38 U.S.C. 1705). The purpose of the enrollment system was to provide a mechanism for prioritizing the provision of VA health care if available resources were insufficient to provide all needed care to all veterans who sought it. The law initially established seven priority categories, although Congress subsequently expanded that to eight categories. The eight specific categories are enumerated in 38 U.S.C. 1705(a).

The guidelines that VA promulgated to govern the provision of sensori-neural aids specifically listed groups of veterans who could receive such devices. Listed were the veterans included in enrollment categories 1 through 4, and certain other veterans with unique vision and hearing needs. Veterans in enrollment priority categories 1 through 4, who are also specifically made eligible for sensori-neural aids under the guidelines, are veterans with compensable service-connected conditions, former prisoners of war, and nonservice-connected veterans in receipt of increased pension based on the need for regular aid and attendance or by reason of being permanently housebound.

In 1999, some 2 years after VA promulgated the rule governing sensori-neural aids, Congress passed Public Law No. 106–117, the ''Veterans Millennium Health Care and Benefits Act'' (Millennium Act). The Millennium Act amended the law establishing the enrollment priority categories. In this Act, Congress added to enrollment priority category 3, those veterans who were awarded the Purple Heart. Those veterans were, in short, given enrollment priority status at the same level as service-connected veterans rated 10 percent or 20 percent and former POWs. In order to be consistent with that change in law, VA believes it appropriate to also provide that those veterans be eligible for sensori-neural aids. Accordingly, we propose to amend the guidelines to include in § 17.149(b), veterans who received the Purple Heart.

Unfunded Mandates

The Unfunded Mandates Reform Act requires, at 2 U.S.C. 1532, that agencies prepare an assessment of anticipated costs and benefits before developing any rule that may result in an expenditure by State, local, or tribal governments, in the aggregate, or by the private sector, of $100 million or more in any given year. This proposed amendment would have no such effect on State, local, or tribal governments, or the private sector.

Executive Order 12866

This document has been reviewed by the Office of Management and Budget under Executive Order 12866.

Paperwork Reduction Act

This document contains no provisions constituting a collection of information under the Paperwork Reduction Act (44 U.S.C. 3501–3521).

Regulatory Flexibility Act

The Secretary of Veterans Affairs (VA) hereby certifies that this proposed regulatory amendment will not have a significant economic impact on a substantial number of small entities as they are defined in the Regulatory Flexibility Act, 5 U.S.C. 601–612. This proposed amendment would affect only veterans receiving certain VA benefits and does not affect any small entities. Therefore, pursuant to 5 U.S.C. 605(b), this proposed amendment is exempt from the initial and final regulatory flexibility analysis requirements of sections 603 and 604.

Catalog of Federal Domestic Assistance Numbers

The Catalog of Federal Domestic Assistance Numbers are 64.009, 64.010, 64.011, and 64.013.

List of Subjects in 38 CFR Part 17

Administrative practice and procedure, Alcohol abuse, Alcoholism, Claims, Day care, Dental health, Drug abuse, Foreign relations, Government contracts, Grant programs-health, Government programs-veterans, Health care, Health facilities, Health professions, Health records, Homeless, Medical and dental schools, Medical devices, Medical research, Mental health programs, Nursing home care, Philippines, Reporting and recordkeeping requirements, Scholarships and fellowships, Travel and transportation expenses, Veterans.

Approved: June 25, 2003.

Anthony J. Principi,

Secretary of Veterans Affairs.

For the reasons set forth in the preamble, VA proposes to amend 38 CFR part 17 as follows:

PART 17—MEDICAL

1. The authority citation for part 17 continues to read as follows:

Authority: 38 U.S.C. 501, 1721, unless otherwise noted.

2. Section 17.149, is amended by:

a. Redesignating paragraphs (b)(3) through (b)(7) as paragraphs (b)(4) through (b)(8), respectively; and

b. Adding a new paragraph (b)(3).

The addition reads as follows:

§ 17.149 Sensori-neural aids.

* * * * *

(b) * * *

(3) Those awarded a Purple Heart;

* * * * *

[FR Doc. 03–19441 Filed 7–30–03; 8:45 am]

BILLING CODE 8320–01–P

ENVIRONMENTAL PROTECTION AGENCY

40 CFR Part 55

[FRL–7537–2]

Outer Continental Shelf Air Regulations; Consistency Update for California

AGENCY: Environmental Protection Agency (''EPA'').

ACTION: Proposed rule—consistency update.

SUMMARY: EPA is proposing to update a portion of the Outer Continental Shelf (''OCS'') Air Regulations. Requirements applying to OCS sources located within 25 miles of States' seaward boundaries must be updated periodically to remain consistent with the requirements of the corresponding onshore area (''COA''), as mandated by the Clean Air Act, as amended in 1990 (''the Act''). The portion of the OCS air regulations that is being updated pertains to the requirements for OCS sources for which the South Coast Air Quality Management District (South Coast AQMD) is the designated COA. The intended effect of approving the OCS requirements for the above District is to regulate emissions from OCS sources in accordance with the requirements onshore. The changes to the existing requirements discussed below are proposed to be incorporated by reference into the Code of Federal Regulations and are listed in the appendix to the OCS air regulations.

DATES: Comments on the proposed update must be received on or before September 2, 2003.

ADDRESSES: Comments must be mailed (in duplicate if possible) to: EPA Air Docket (Air–4), Attn: Docket No. A–93–16 Section XXVIII, Environmental Protection Agency, Air Division, Region 9, 75 Hawthorne St., San Francisco, CA 94105.

Docket: Supporting information used in developing the rule and copies of the documents EPA is proposing to incorporate by reference are contained in Docket No. A–93–16 Section XXVIII. This docket is available for public inspection and copying Monday–Friday during regular business hours at the following locations:

EPA Air Docket (Air–4), Attn: Docket No. A–93–16 Section XXVIII, Environmental Protection Agency, Air Division, Region 9, 75 Hawthorne St., San Francisco, CA 94105.

EPA Air Docket (LE–131), Attn: Air Docket No. A–93–16 Section XXVIII, Environmental Protection Agency, Air Docket (6102), Ariel Rios Building, 1200 Pennsylvania Avenue, NW., Washington DC 20460.

A reasonable fee may be charged for copying.

FOR FURTHER INFORMATION CONTACT: Christine Vineyard, Air Division (Air–4), U.S. EPA Region 9, 75 Hawthorne Street, San Francisco, CA 94105, (415) 947–4125.

I. Background Information

A. Why Is EPA Taking This Action?

On September 4, 1992, EPA promulgated 40 CFR part 55,[1] which established requirements to control air pollution from OCS sources in order to attain and maintain federal and state ambient air quality standards and to comply with the provisions of part C of title I of the Act. Part 55 applies to all OCS sources offshore of the States except those located in the Gulf of Mexico west of 87.5 degrees longitude. Section 328 of the Act requires that for such sources located within 25 miles of a State's seaward boundary, the requirements shall be the same as would be applicable if the sources were located in the COA. Because the OCS requirements are based on onshore requirements, and onshore requirements may change, section 328(a)(1) requires that EPA update the OCS requirements as necessary to maintain consistency with onshore requirements.

Pursuant to § 55.12 of the OCS rule, consistency reviews will occur (1) at least annually; (2) upon receipt of a Notice of Intent under § 55.4; or (3) when a State or local agency submits a rule to EPA to be considered for incorporation by reference in part 55. This proposed action is being taken in response to the submittal of rules by a local air pollution control agency. Public comments received in writing within 30 days of publication of this document will be considered by EPA before publishing a final rule.

Section 328(a) of the Act requires that EPA establish requirements to control air pollution from OCS sources located within 25 miles of States' seaward boundaries that are the same as onshore

[1] The reader may refer to the Notice of Proposed Rulemaking, December 5, 1991 (56 FR 63774), and the preamble to the final rule promulgated September 4, 1992 (57 FR 40792) for further background and information on the OCS regulations.

requirements. To comply with this statutory mandate, EPA must incorporate applicable onshore rules into part 55 as they exist onshore. This limits EPA's flexibility in deciding which requirements will be incorporated into part 55 and prevents EPA from making substantive changes to the requirements it incorporates. As a result, EPA may be incorporating rules into part 55 that do not conform to all of EPA's State implementation plan (SIP) guidance or certain requirements of the Act. Consistency updates may result in the inclusion of state or local rules or regulations into part 55, even though the same rules may ultimately be disapproved for inclusion as part of the SIP. Inclusion in the OCS rule does not imply that a rule meets the requirements of the Act for SIP approval, nor does it imply that the rule will be approved by EPA for inclusion in the SIP.

II. EPA's Evaluation

A. What Criteria Were Used To Evaluate Rules Submitted To Update 40 CFR Part 55?

In updating 40 CFR part 55, EPA reviewed the rules submitted for inclusion in part 55 to ensure that they are rationally related to the attainment or maintenance of Federal or State ambient air quality standards or part C of title I of the Act, that they are not designed expressly to prevent exploration and development of the OCS and that they are applicable to OCS sources. 40 CFR 55.1. EPA has also evaluated the rules to ensure they are not arbitrary or capricious. 40 CFR 55.12 (e). In addition, EPA has excluded administrative or procedural rules,[2] and requirements that regulate toxics which are not related to the attainment and maintenance of Federal and State ambient air quality standards.

B. What Rule Revisions Were Submitted To Update 40 CFR Part 55?

After review of the rules submitted by South Coast AQMD against the criteria set forth above and in 40 CFR part 55, EPA is proposing to make the following new rule applicable to OCS sources for which the South Coast AQMD is designated as the COA (note: no requirements that are not related to the attainment and maintenance of federal and state ambient air quality standards will be incorporated to regulate toxics):

Rule No.	Rule names	Adoption date
1113	Architectural Coatings	12/06/02
1122	Solvent Degreasers	12/06/02
1173	Control of Volatile Organic Compound Leaks and Releases from Components at Petroleum Facilities and Chemical Plants.	12/06/02
1302	Definitions	12/06/02
1303	Requirements	12/06/02
1306	Emission Calculations	12/06/02

III. Administrative Requirements

A. Executive Order 12866

The Office of Management and Budget (OMB) has exempted this regulatory action from Executive Order 12866, Regulatory Planning and Review.

B. Executive Order 13045

Executive Order 13045, entitled Protection of Children from Environmental Health Risks and Safety Risks (62 FR 19885, April 23, 1997), applies to any rule that: (1) Is determined to be ''economically significant'' as defined under Executive Order 12866, and (2) concerns an environmental health or safety risk that EPA has reason to believe may have a disproportionate effect on children. If the regulatory action meets both criteria, the Agency must evaluate the environmental health or safety effects of the planned rule on children, and explain why the planned regulation is preferable to other potentially effective and reasonably feasible alternatives considered by the Agency.

This rule is not subject to Executive Order 13045 because it does not involve decisions intended to mitigate environmental health or safety risks.

C. Executive Order 13175

Executive Order 13175, entitled ''Consultation and Coordination with Indian Tribal Governments'' (65 FR 67249, November 6, 2000), requires EPA to develop an accountable process to ensure ''meaningful and timely input by tribal officials in the development of regulatory policies that have tribal implications.'' ''Policies that have tribal implications'' is defined in the Executive Order to include regulations that have ''substantial direct effects on one or more Indian tribes, on the relationship between the Federal government and the Indian tribes, or on the distribution of power and responsibilities between the Federal government and Indian tribes.''

This proposed rule does not have tribal implications. It will not have substantial direct effects on tribal governments, on the relationship between the Federal government and Indian tribes, or on the distribution of power and responsibilities between the Federal government and Indian tribes, as specified in Executive Order 13175. Thus, Executive Order 13175 does not apply to this rule. In the spirit of Executive Order 13175, and consistent with EPA policy to promote communications between EPA and tribal governments, EPA specifically solicits additional comment on this proposed rule from tribal officials.

D. Executive Order 13132

Executive Order 13132, entitled Federalism (64 FR 43255, August 10, 1999) revokes and replaces Executive Orders 12612, Federalism and 12875, Enhancing the Intergovernmental Partnership. Executive Order 13132 requires EPA to develop an accountable process to ensure ''meaningful and timely input by State and local officials in the development of regulatory policies that have federalism implications.'' ''Policies that have federalism implications'' is defined in the Executive Order to include regulations that have ''substantial direct effects on the States, on the relationship between the national government and the States, or on the distribution of power and responsibilities among the various levels of government.'' Under Executive Order 13132, EPA may not issue a regulation that has federalism implications, that imposes substantial direct compliance costs, and that is not required by statute, unless the Federal

[2] Each COA which has been delegated the authority to implement and enforce part 55, will use its administrative and procedural rules as onshore. However, in those instances where EPA has not delegated authority to implement and enforce part 55, EPA will use its own administrative and procedural requirements to implement the substantive requirements. 40 CFR 55.14(c)(4).

government provides the funds necessary to pay the direct compliance costs incurred by State and local governments, or EPA consults with State and local officials early in the process of developing the proposed regulation. EPA also may not issue a regulation that has federalism implications and that preempts State law unless the Agency consults with State and local officials early in the process of developing the proposed regulation.

This proposed rule will not have substantial direct effects on the States, on the relationship between the national government and the States, or on the distribution of power and responsibilities among the various levels of government, as specified in Executive Order 13132, because it merely acts on a State rule implementing a federal standard, and does not alter the relationship or the distribution of power and responsibilities established in the Clean Air Act. Thus, the requirements of section 6 of the Executive Order do not apply to this proposed rule.

E. Regulatory Flexibility Act, as Amended by the Small Business Regulatory Enforcement Fairness Act of 1996 (SBREFA), 5 U.S.C. 601 et seq.

The Regulatory Flexibility Act (RFA) generally requires an agency to prepare a regulatory flexibility analysis for any rule that will have a significant economic impact on a substantial number of small entities. The RFA applies only to rules subject to notice and comment rulemaking requirements unless the agency certifies that the rule will not have a significant economic impact on a substantial number of small entities. Small entities include small businesses, small not-for-profit enterprises, and small governmental jurisdictions.

This proposed rule will not have a significant impact on a substantial number of small entities because consistency updates do not create any new requirements but simply act on requirements that the State is already imposing. Therefore, because the consistency update approval does not create any new requirements, I certify that this action will not have a significant economic impact on a substantial number of small entities.

F. Unfunded Mandates

Under section 202 of the Unfunded Mandates Reform Act of 1995 (''Unfunded Mandates Act''), signed into law on March 22, 1995, EPA must prepare a budgetary impact statement to accompany any proposed or final rule that includes a Federal mandate that may result in estimated costs to State, local, or tribal governments in the aggregate; or to private sector, of $100 million or more. Under section 205, EPA must select the most cost-effective and least burdensome alternative that achieves the objectives of the rule and is consistent with statutory requirements. Section 203 requires EPA to establish a plan for informing and advising any small governments that may be significantly or uniquely impacted by the rule.

EPA has determined that the proposed action does not include a Federal mandate that may result in estimated costs of $100 million or more to either State, local, or tribal governments in the aggregate, or to the private sector. This proposed Federal action acts on pre-existing requirements under State or local law, and imposes no new requirements. Accordingly, no additional costs to State, local, or tribal governments, or to the private sector, result from this action.

G. National Technology Transfer and Advancement Act

Section 12 of the National Technology Transfer and Advancement Act (NTTAA) of 1995 requires Federal agencies to evaluate existing technical standards when developing a new regulation. To comply with NTTAA, EPA must consider and use ''voluntary consensus standards'' (VCS) if available and applicable when developing programs and policies unless doing so would be inconsistent with applicable law or otherwise impractical.

EPA believes that VCS are inapplicable to today's proposed action because it does not require the public to perform activities conducive to the use of VCS.

H. Executive Order 13211 (Energy Effects)

This rule is not subject to Executive Order 13211, ''Actions Concerning Regulations That Significantly Affect Energy Supply, Distribution, or Use'' (66 FR 28355 (May 22, 2001)) because it is not a significant action under Executive Order 12866.

List of Subjects in 40 CFR Part 55

Environmental protection, Administrative practice and procedures, Air pollution control, Continental shelf, Incorporation by reference, Intergovernmental relations, Nitrogen dioxide, Ozone, Particulate matter, Reporting and recordkeeping requirements, Sulfur oxides.

Dated: July 8, 2003.

Wayne Nastri,

Regional Administrator, Region IX.

Title 40 of the Code of Federal Regulations, part 55, is proposed to be amended as follows:

PART 55—[AMENDED]

1. The authority citation for part 55 continues to read as follows:

Authority: Section 328 of the Clean Air Act (42 U.S.C. 7401 *et seq.*) as amended by Pub. L. 101–549.

2. Section 55.14 is proposed to be amended by revising paragraph (e)(3)(ii) (G) to read as follows:

§ 55.14 Requirements that apply to OCS sources located within 25 miles of States seaward boundaries, by State.

* * * * *

(e) * * *

(3) * * *

(ii) * * *

(G) *South Coast Air Quality Management District Requirements Applicable to OCS Sources.*

* * * * *

Appendix to Part 55—[Amended]

3. Appendix A to CFR part 55 is proposed to be amended by revising paragraph (b)(7) under the heading ''California'' to read as follows:

Appendix A to 40 CFR Part 55—Listing of State and Local Requirements Incorporated by Reference Into Part 55, by State.

* * * * *

California

* * * * *

(b) Local requirements.

* * * * *

(7) *The following requirements are contained in South Coast Air Quality Management District Requirements Applicable to OCS Sources* (Part I, II and III):

Rule 102 Definition of Terms (Adopted 10/19/01)

Rule 103 Definition of Geographical Areas (Adopted 1/9/76)

Rule 104 Reporting of Source Test Data and Analyses (Adopted 1/9/76)

Rule 108 Alternative Emission Control Plans (Adopted 4/6/90)

Rule 109 Recordkeeping for Volatile Organic Compound Emissions (Adopted 8/18/00)

Rule 112 Definition of Minor Violation and Guidelines for Issuane of Notice to Comply (Adopted 11/13/98)

Rule 118 Emergencies (Adopted 12/7/95)

Rule 201 Permit to Construct (Adopted 1/5/90)

Rule 201.1 Permit Conditions in Federally Issued Permits to Construct (Adopted 1/5/90)

Rule 202 Temporary Permit to Operate (Adopted 5/7/76)

Rule 203 Permit to Operate (Adopted 1/5/90)
Rule 204 Permit Conditions (Adopted 3/6/92)
Rule 205 Expiration of Permits to Construct (Adopted 1/5/90)
Rule 206 Posting of Permit to Operate (Adopted 1/5/90)
Rule 207 Altering or Falsifying of Permit (Adopted 1/9/76)
Rule 208 Permit and Burn Authorization for Open Burning (12/21/01)
Rule 209 Transfer and Voiding of Permits (Adopted 1/5/90)
Rule 210 Applications and Regulation II—List and Criteria Identifying Information required of Applicants Seeking a Permit to Construct from the SCAQMD (Adopted 4/10/98)
Rule 212 Standards for Approving Permits (Adopted 12/7/95) except (c)(3) and (e)
Rule 214 Denial of Permits (Adopted 1/5/90)
Rule 217 Provisions for Sampling and Testing Facilities (Adopted 1/5/90)
Rule 218 Continuous Emission Monitoring (Adopted 5/14/99)
Rule 218.1 Continuous Emission Monitoring Performance Specifications (Adopted 5/14/99)
Rule 218.1 Attachment A—Supplemental and Alternative CEMS Performance Requirements (Adopted 5/14/99)
Rule 219 Equipment Not Requiring a Written Permit Pursuant to Regulation II (Adopted 11/17/00)
Rule 220 Exemption—Net Increase in Emissions (Adopted 8/7/81)
Rule 221 Plans (Adopted 1/4/85)
Rule 301 Permit Fees (Adopted 5/11/01) except (e)(7) and Table IV
Rule 304 Equipment, Materials, and Ambient Air Analyses (Adopted 5/11/01)
Rule 304.1 Analyses Fees (Adopted 5/11/01)
Rule 305 Fees for Acid Deposition (Adopted 10/4/91)
Rule 306 Plan Fees (Adopted 5/11/01)
Rule 309 Fees for Regulation XVI Plans (Adopted 5/11/01)
Rule 401 Visible Emissions (Adopted 11/9/01)
Rule 403 Fugitive Dust (Adopted 12/11/98)
Rule 404 Particulate Matter—Concentration (Adopted 2/7/86)
Rule 405 Solid Particulate Matter—Weight (Adopted 2/7/86)
Rule 407 Liquid and Gaseous Air Contaminants (Adopted 4/2/82)
Rule 408 Circumvention (Adopted 5/7/76)
Rule 409 Combustion Contaminants (Adopted 8/7/81)
Rule 429 Start-Up and Shutdown Provisions for Oxides of Nitrogen (Adopted 12/21/90)
Rule 430 Breakdown Provisions, (a) and (e) only (Adopted 7/12/96)
Rule 431.1 Sulfur Content of Gaseous Fuels (Adopted 6/12/98)
Rule 431.2 Sulfur Content of Liquid Fuels (Adopted 9/15/00)
Rule 431.3 Sulfur Content of Fossil Fuels (Adopted 5/7/76)
Rule 441 Research Operations (Adopted 5/7/76)
Rule 442 Usage of Solvents (Adopted 12/15/00)
Rule 444 Open Burning (Adopted 12/21/01)
Rule 463 Organic Liquid Storage (Adopted 3/11/94)
Rule 465 Vacuum Producing Devices or Systems (Adopted 8/13/99)
Rule 468 Sulfur Recovery Units (Adopted 10/8/76)
Rule 473 Disposal of Solid and Liquid Wastes (Adopted 5/7/76)
Rule 474 Fuel Burning Equipment-Oxides of Nitrogen (Adopted 12/4/81)
Rule 475 Electric Power Generating Equipment (Adopted 8/7/78)
Rule 476 Steam Generating Equipment (Adopted 10/8/76)
Rule 480 Natural Gas Fired Control Devices (Adopted 10/7/77)
Addendum to Regulation IV (Effective 1977)
Rule 518 Variance Procedures for Title V Facilities (Adopted 8/11/95)
Rule 518.1 Permit Appeal Procedures for Title V Facilities (Adopted 8/11/95)
Rule 518.2 Federal Alternative Operating Conditions (Adopted12/21/01)
Rule 701 Air Pollution Emergency Contingency Actions (Adopted 6/13/97)
Rule 702 Definitions (Adopted 7/11/80)
Rule 708 Plans (Rescinded 9/8/95)
Regulation IX New Source Performance Standards (Adopted 5/11/01)
Reg. X National Emission Standards for Hazardous Air Pollutants (NESHAPS) (Adopted 5/11/01)
Rule 1106 Marine Coatings Operations (Adopted 1/13/95)
Rule 1107 Coating of Metal Parts and Products (Adopted 11/9/01)
Rule 1109 Emissions of Oxides of Nitrogen for Boilers and Process Heaters in Petroleum Refineries (Adopted 8/5/88)
Rule 1110 Emissions from Stationary Internal Combustion Engines (Demonstration) (Adopted 11/14/97)
Rule 1110.1 Emissions from Stationary Internal Combustion Engines (Adopted 10/4/85)
Rule 1110.2 Emissions from Gaseous- and Liquid-Fueled Internal Combustion Engines (Adopted 11/14/97)
Rule 1113 Architectural Coatings (Adopted 12/06/02)
Rule 1116.1 Lightering Vessel Operations-Sulfur Content of Bunker Fuel (Adopted 10/20/78)
Rule 1121 Control of Nitrogen Oxides from Residential-Type Natural Gas-Fired Water Heaters (Adopted 12/10/99)
Rule 1122 Solvent Degreasers (Adopted 12/06/02)
Rule 1123 Refinery Process Turnarounds (Adopted 12/7/90)
Rule 1125 Metal Containers, Closure, and Coil Coating Operations (adopted 1/13/95)
Rule 1132 Further Control of VOC Emissions from High-Emitting Spray Booth Facilitites (Adopted 1/19/01)
Rule 1134 Emissions of Oxides of Nitrogen from Stationary Gas Turbines (Adopted 8/8/97)
Rule 1136 Wood Products Coatings (Adopted 6/14/96)
Rule 1137 PM10 Emission Reductions from Woodworking Operations (Adopted 2/01/02)
Rule 1140 Abrasive Blasting (Adopted 8/2/85)
Rule 1142 Marine Tank Vessel Operations (Adopted 7/19/91)
Rule 1146 Emissions of Oxides of Nitrogen from Industrial, Institutional, and Commercial Boilers, Steam Generators, and Process Heaters (Adopted 11/17/00)
Rule 1146.1 Emission of Oxides of Nitrogen from Small Industrial, Institutional, and Commercial Boilers, Steam Generators, and Process Heaters (Adopted 5/13/94)
Rule 1146.2 Emissions of Oxides of Nitrogen from Large Water Heaters and Small Boilers (Adopted 1/9/98)
Rule 1148 Thermally Enhanced Oil Recovery Wells (Adopted 11/5/82)
Rule 1149 Storage Tank Degassing (Adopted 7/14/95)
Rule 1168 Adhesive and Sealant Applications (Adopted 6/07/02)
Rule 1171 Solvent Cleaning Operations (Adopted 08/2/02)
Rule 1173 Fugitive Emissions of Volatile Organic Compounds (Adopted 12/06/02)
Rule 1176 VOC Emissions from Wastewater Systems (Adopted 9/13/96)
Rule 1178 Further Reductions of VOC Emissions from Storage Tanks at Petroleum Facilities (Adopted 12/21/01)
Rule 1301 General (Adopted 12/7/95)
Rule 1302 Definitions (Adopted 12/06/02)
Rule 1303 Requirements (Adopted 12/06/02)
Rule 1304 Exemptions (Adopted 6/14/96)
Rule 1306 Emission Calculations (Adopted 12/06/02)
Rule 1313 Permits to Operate (Adopted 12/7/95)
Rule 1403 Asbestos Emissions from Demolition/Renovation Activities (Adopted 4/8/94)
Rule 1605 Credits for the Voluntary Repair of On-Road Vehicles Identified Through Remote Sensing Devices (Adopted 10/11/96)
Rule 1610 Old-Vehicle Scrapping (Adopted 2/12/99)
Rule 1612 Credits for Clean On-Road Vehicles (Adopted 7/10/98)
Rule 1612.1 Mobile Source Credit Generation Pilot Program (Adopted 3/16/01)
Rule 1620 Credits for Clean Off-Road Mobile Equipment (Adopted 7/10/98)
Rule 1701 General (Adopted 8/13/99)
Rule 1702 Definitions (Adopted 8/13/99)
Rule 1703 PSD Analysis (Adopted 10/7/88)
Rule 1704 Exemptions (Adopted 8/13/99)
Rule 1706 Emission Calculations (Adopted 8/13/99)
Rule 1713 Source Obligation (Adopted 10/7/88)
Regulation XVII Appendix (effective 1977)
Rule 1901 General Conformity (Adopted 9/9/94)
Rule 2000 General (Adopted 5/11/01)
Rule 2001 Applicability (Adopted 2/14/97)
Rule 2002 Allocations for Oxides of Nitrogen (NO_X) and Oxides of Sulfur (SO_X) Emissions (Adopted 5/11/01)
Rule 2004 Requirements (Adopted 5/11/01) except (l)
Rule 2005 New Source Review for RECLAIM (Adopted 4/20/01) except (i)
Rule 2006 Permits (Adopted 5/11/01)
Rule 2007 Trading Requirements (Adopted 5/11/01)

Rule 2008 Mobile Source Credits (Adopted 10/15/93)
Rule 2010 Administrative Remedies and Sanctions (Adopted 5/11/01)
Rule 2011 Requirements for Monitoring, Reporting, and Recordkeeping for Oxides of Sulfur (SO_X) Emissions (Adopted 5/11/01)
Appendix A Volume IV—(Protocol for oxides of sulfur) (Adopted 3/10/95)
Rule 2012 Requirements for Monitoring, Reporting, and Recordkeeping for Oxides of Nitrogen (NO_X) Emissions (Adopted 5/11/01)
Appendix A Volume V—(Protocol for oxides of nitrogen) (Adopted 3/10/95)
Rule 2015 Backstop Provisions (Adopted 5/11/11) except (b)(1)(G) and (b)(3)(B)
Rule 2020 RECLAIM Reserve (Adopted 5/11/01)
Rule 2100 Registration of Portable Equipment (Adopted 7/11/97)
Rule 2506 Area Source Credits for NO_X and SO_X (Adopted 12/10/99)
XXX Title V Permits
Rule 3000 General (Adopted 11/14/97)
Rule 3001 Applicability (Adopted 11/14/97)
Rule 3002 Requirements (Adopted 11/14/97)
Rule 3003 Applications (Adopted 3/16/01)
Rule 3004 Permit Types and Content (Adopted 12/12/97)
Rule 3005 Permit Revisions (Adopted 3/16/01)
Rule 3006 Public Participation (Adopted 11/14/97)
Rule 3007 Effect of Permit (Adopted 10/8/93)
Rule 3008 Potential To Emit Limitations (3/16/01)
XXXI Acid Rain Permit Program (Adopted 2/10/95)

* * * * *

[FR Doc. 03–19283 Filed 7–30–03; 8:45 am]

BILLING CODE 6560–50–P

DEPARTMENT OF COMMERCE

National Oceanic and Atmospheric Administration

50 CFR Part 648

[I.D. 072303A]

New England Fishery Management Council; Public Meeting

AGENCY: National Marine Fisheries Service (NMFS), National Oceanic and Atmospheric Administration (NOAA), Commerce.

ACTION: Public meeting.

SUMMARY: The New England Fishery Management Council (Council) will hold a 2–day Council meeting on August 13–14, 2003, to consider actions affecting New England fisheries in the exclusive economic zone (EEZ).

DATES: The meeting will be held on Wednesday and Thursday, August 13 and 14, 2003. The meeting will begin at 9:00 a.m. on Wednesday and 8:30 a.m. on Thursday.

ADDRESSES: The meeting will be held at the Peabody Marriott Hotel, 8A Centennial Drive, Peabody, MA 01960; telephone (978) 977–0010. Requests for special accommodations should be addressed to the New England Fishery Management Council, 50 Water Street, Mill 2, Newburyport, MA 01950; telephone (978) 465–0492.

FOR FURTHER INFORMATION CONTACT: Paul J. Howard, Executive Director, New England Fishery Management Council, (978) 465–0492.

SUPPLEMENTARY INFORMATION:

Wednesday and Thursday, August 13 and 14, 2003

Following introductions, the Council will consider final approval of management measures for inclusion in Amendment 10 to the Atlantic Sea Scallop Fishery Management Plan, based on public comments on the associated Draft Supplemental Environmental Impact Statement. The action may include alternatives to improve scallop yield through area rotation or other measures; to minimize impacts on essential fish habitat and bycatch; to revise the management and permitting process for scallop fishing with general category permits; to modify or introduce new procedures to collect fishery data; to conduct and fund habitat research through set-asides; and to make management changes through the framework adjustment process. The Council also will consider revising the scallop overfishing definition to be compatible with area rotation and long-term closures, as well as changing the fishing year. Any other outstanding business will be addressed before adjournment of the meeting.

Although other non-emergency issues not contained in this agenda may come before this Council for discussion, those issues may not be the subjects of formal action during this meeting. Council action will be restricted to those issues specifically listed in this notice and any issues arising after publication of this notice that require emergency action under section 305(c) of the Magnuson-Stevens Fishery Conservation and Management Act, provided that the public has been notified of the Council's intent to take final action to address the emergency.

Special Accommodations

This meeting is physically accessible to people with disabilities. Requests for sign language interpretation or other auxiliary aids should be directed to Paul J. Howard (see **ADDRESSES**) at least 5 days prior to the meeting date.

Dated: July 25, 2003.

Bruce C. Morehead,

Acting Director, Office of Sustainable Fisheries, National Marine Fisheries Service.

[FR Doc. 03–19519 Filed 7–30–03; 8:45 am]

BILLING CODE 3510–22–S

Notices

Federal Register

Vol. 68, No. 147

Thursday, July 31, 2003

This section of the FEDERAL REGISTER contains documents other than rules or proposed rules that are applicable to the public. Notices of hearings and investigations, committee meetings, agency decisions and rulings, delegations of authority, filing of petitions and applications and agency statements of organization and functions are examples of documents appearing in this section.

ADVISORY COUNCIL ON HISTORIC PRESERVATION

Notice of Meeting

AGENCY: Advisory Council on Historic Preservation.

ACTION: Notice of meeting.

SUMMARY: Notice is hereby given that the Advisory Council on Historic Preservation (ACHP) will meet on Friday, August 15, 2003. The meeting will be held at the Regent Hotel, 55 Wall Street, New York City, New York, beginning at 9 a.m.

The ACHP was established by the National Historic Preservation Act of 1966 (16 U.S.C. 470 *et seq.*) to advise the President and the Congress on matters relating to historic preservation and to comment upon Federal, federally assisted, and federally licensed undertakings having an effect upon properties listed in or eligible for inclusion in the National Register of Historic Places. The ACHP's members are the Architect of the Capitol; the Secretaries of the Interior, Agriculture, Defense, and Transportation; the Administrators of the Environmental Protection Agency and General Services Administration; the Chairman of the National Trust for Historic Preservation; the President of the National Conference of State Historic Preservation Officers; a Governor; a Mayor; a Native Hawaiian; and eight non-Federal members appointed by the President.

The agenda for the meeting includes the following:

I. Chairman's Welcome
II. Swearing in of New Members
III. Presentation of Chairman's Awards for Federal Achievement in Historic Preservation
IV. Signing of Interagency Partnership
V. Report of the Executive Committee
VI. Preserve America Program Development
VII. Preserve America Executive Order Implementation
VIII. Revision of ACHP Strategic Plan
IX. Report of the Preservation Initiatives Committee
X. Report of the Federal Agency Programs Committee
XI. Report of the Communications, Education, and Outreach Committee
XII. Chairman's Report
XIII. Executive Director's Report
XIV. New Business
XV. Adjourn

Note: The meetings of the ACHP are open to the public. If you need special accommodations due to a disability, please contact the Advisory Council on Historic Preservation, 1100 Pennsylvania Ave., NW., Room 809, Washington, DC, (202) 606–8503, at least seven (7) days prior to the meeting.

FOR FURTHER INFORMATION CONTACT: Additional information concerning the meeting is available from the Executive Director, Advisory Council on Historic Preservation, 1100 Pennsylvania Ave., NW., #809, Washington, DC 20004.

Dated: July 25, 2003.

John M. Fowler,

Executive Director.

[FR Doc. 03–19468 Filed 7–30–03; 8:45 am]

BILLING CODE 4310–10–M

DEPARTMENT OF AGRICULTURE

Forest Service

Lost River and Challis Ranger Districts, Salmon-Challis National Forest; Idaho; Lost River/Lemhi Grazing Allotments Environmental Impact Statement

AGENCY: Forest Service, USDA.

ACTION: Notice of intent to prepare an environmental impact statement.

SUMMARY: The Lost River and Challis Ranger Districts propose to update the livestock grazing plans for twenty-one grazing allotments. These include fifteen Cattle and Horse grazing allotments and five Sheep and Goat grazing allotments on the Lost River Ranger District and one Sheep and Goat grazing allotment on the Challis Ranger District. The allotments are located in the Lost River and Lemhi Mountain Ranges and are within a 35-mile radius of Mackay, Idaho.

DATES: Comments concerning the scope of the analysis must be received by September 5, 2003. The draft environmental impact statement is expected January 2005 and the final environmental impact statement is expected May 2005.

ADDRESSES: Send written comments to Tony Beke, Planning, Salmon-Challis National Forest, 50 Hwy 93 South, Salmon, Idaho 83467.

For further information, mail correspondence to Tony Beke, Planning, Salmon-Challis National Forest, 50 Hwy 93 South, Salmon, Idaho 83467, or e-mail, *tbeke@fs.fed.us.*

A public meeting will be conducted at the Arco-Butte Business Center, 159 N Idaho, Arco, Idaho on August 19, 2003 starting at 6 p.m.

FOR FURTHER INFORMATION CONTACT: Tony Beke, Civil Engineer, Salmon-Challis National Forest, USDA Forest Service (see address above).

SUPPLEMENTARY INFORMATION:

Purpose and Need for Action

This proposal, in part, is to comply with Public Law 104–19, Section 504(a): establish and adhere to a schedule for the completion of National Environmental Policy Act (NEPA) of 1969 (42 U.S.C. 4321 *et seq.*) analysis and decision on all grazing allotments within the National Forest System unit for which NEPA is needed (Pub. L. 104–19, General Provision 1995). Upon completion of the NEPA analysis and decisions for the allotments, the terms and conditions of existing grazing permits will be modified, as necessary, to conform to such NEPA analysis. In addition, the purpose of the proposed action is to improve range condition and trend and achieve desired conditions within the project area through livestock grazing.

Proposed Action

The proposed action is to authorize continued livestock grazing, provide analysis and data to update allotment management plans (AMPs), and allow permitted livestock grazing that meets or moves existing resource conditions toward desired conditions on national forest grazing allotments while complying with applicable statutes. Adaptive management, which allows flexibility during the implementation of the grazing strategy, would allow managers to make adjustments and corrections to management based on monitoring. Three of the five Sheep and Goat grazing allotments in the Lost River Mountain Range are proposed to be converted to Cattle and Horse grazing allotments to resolve conflicts between domestic and bighorn sheep, if this use

is determined to be appropriate. Range improvements may be necessary to make this conversion. The conflict between domestic and bighorn sheep is a virus that can be transmitted from domestic sheep if they come in contact with bighorn sheep. A forest plan amendment will be necessary to modify management direction for range management within Management Area 16, Borah Peak.

Possible Alternatives

No Grazing and No Action alternatives will be analyzed to the proposed action during the NEPA process. The No Grazing alternative would eliminate domestic livestock grazing on allotments. The No Action alternative would allow continued livestock grazing as it is currently being managed. Other alternatives, arising from issues identified through scoping, could be analyzed as well.

Responsible Official

George Matejko, Forest Supervisor, 50 Hwy 93 South, Salmon, ID 83467.

Nature of Decision To Be Made

The Forest Supervisor will decide whether to authorize continued livestock grazing on the allotments' suitable rangelands in accordance with the standards in the proposed action or as modified by additional mitigation measures and monitoring requirements. The proposed action, or as modified by this analysis, will require a Forest Land and Resource Management Plan Amendment.

Scoping Process

This analysis is for twenty-one grazing allotments. The decision will have limited environmental effects outside the allotment boundaries, and the economic impacts are localized. Scoping will include:

- Review scoping comments from previous efforts
- Publish notice in the Challis Messenger and Salmon Recorder Herald, the newspapers of record, and the Arco Advertiser, another local newspaper, announcing the public meeting and requesting comments
- Mail scoping letters to interested public and grazing permittees describing the proposed action and preliminary issues
- Conduct public meeting in Arco, Idaho on August 19, 2003
- Notify consulting agencies and request comments
- Publish in the Quarterly Schedule of Proposed Actions (SOPA) notice and mail to interested individuals and groups, and put on the Forest's internet site
- Contact and consult with the Shoshone-Bannock Tribes

A public meeting is scheduled for August 19, 2003 at 6 p.m. at the Arco-Butte Business Center, 159 N Idaho, Arco, Idaho.

Preliminary Issues

Concerns identified internally and from previous scoping include:

- Riparian and aquatic habitat
- Terrestrial wildlife
- Effects to other Forest users
- Effects on vegetation structure and composition
- Tribal Treaty Rights

Comment Requested

This notice of intent initiates the scoping process which guides the development of the environmental impact statement. Substantive comments and objections to the proposed action will be considered during this analysis.

Early Notice of Importance of Public Participation in Subsequent Environmental Review: A draft environmental impact statement will be prepared for comment. The comment period on the draft environmental impact statement will be 45 days from the date the Environmental Protection Agency publishes the notice of availability in the **Federal Register**.

The Forest Service believes, at this early stage, it is important to give reviewers notice of several court rulings related to public participation in the environmental review process. First, reviewers of draft environmental impact statements must structure their participation in the environmental review of the proposal so that it is meaningful and alerts an agency to the reviewer's position and contentions. Vermont Yankee Nuclear Power Corp. v. NRDC, 435 U.S. 519, 553 (1978). Also, environmental objections that could be raised at the draft environmental impact statement stage but that are not raised until after completion of the final environmental impact statement may be waived or dismissed by the courts. City of Angoon v. Hodel, 803 F.2d 1016, 1022 (9th Cir. 1986) and Wisconsin Heritages, Inc. v. Harris, 490 F. Supp. 1334, 1338 (E.D. Wis. 1980). Because of these court rulings, it is very important that those interested in this proposed action participate by the close of the 45 day comment period so that substantive comments and objections are made available to the Forest Service at a time when it can meaningfully consider them and respond to them in the final environmental impact statement.

To assist the Forest Service in identifying and considering issues and concerns on the proposed action, comments on the draft environmental impact statement should be as specific as possible. It is also helpful if comments refer to specific pages or chapters of the draft statement. Comments may also address the adequacy of the draft environmental impact statement or the merits of the alternatives formulated and discussed in the statement. Reviewers may wish to refer to the Council on Environmental Quality Regulations for implementing the procedural provisions of the National Environmental Policy Act at 40 CFR 1503.3 in addressing these points.

Comments received, including the names and addresses of those who comment, will be considered part of the public record on this proposal and will be available for public inspection.

(Authority: 40 CFR 1501.7 and 1508.22; Forest Service Handbook 1909.15, Section 21)

Dated: July 24, 2003.

Lyle E. Powers,

Acting Forest Supervisor.

[FR Doc. 03–19481 Filed 7–30–03; 8:45 am]

BILLING CODE 3410–11–P

DEPARTMENT OF AGRICULTURE

Forest Service

Klamath Provincial Advisory Committee (PAC)

AGENCY: Forest Service, USDA.

ACTION: Notice of meeting.

SUMMARY: The Klamath Provincial Advisory Committee will meet on August 13–14, 2003, at Shasta College, 11555 Old Oregon Trail, Redding, California. The meeting will start at 1 p.m. and adjourn at 5 p.m. on August 13, and start at 8 a.m. and adjourn at 12 noon on August 14. Agenda items for the meeting include: (1) Discussion on topics of general interest to the PAC (Implementation Monitoring Field Trips); (2) Stewardship Contracting; (3) Vegetative Treatments in Late Successional Reserves; (4) Burning for Cultural Benefits; and (5) Public Comment Periods. All Provincial Advisory Committee meetings are open to the public. Interested citizens are encouraged to attend.

FOR FURTHER INFORMATION CONTACT: Jan Ford, USDA, Klamath National Forest, 1312 Fairlane Road, Yreka, California 96097; telephone 530–841–4483 (voice), TDD 530–841–4573.

Dated: July 24, 2003.

Margaret J. Boland,

Designated Federal Official, Klamath PAC.

[FR Doc. 03–19476 Filed 7–30–03; 8:45 am]

BILLING CODE 3410–11–M

DEPARTMENT OF COMMERCE

International Trade Administration

[A–570–847]

Persulfates From the People's Republic of China: Preliminary Results of Antidumping Duty Administrative Review

AGENCY: Import Administration, International Trade Administration, Department of Commerce.

SUMMARY: The Department of Commerce is conducting an administrative review of the antidumping duty order on persulfates from the People's Republic of China in response to a request by the petitioner, FMC Corporation, and one exporter of subject merchandise, Shanghai Ai Jian Import and Export Corporation. The period of review is July 1, 2001, through June 30, 2002.

We have preliminarily determined that U.S. sales have been made at not less than normal value. If these preliminary results are adopted in our final results, we will instruct the U.S. Customs Service to assess no antidumping duties on the exports subject to this review.

EFFECTIVE DATE: July 31, 2003.

FOR FURTHER INFORMATION CONTACT: Mike Strollo or Gregory E. Kalbaugh, AD/CVD Enforcement, Group I, Office 2, Import Administration, International Trade Administration, U.S. Department of Commerce, 14th Street and Constitution Avenue, NW., Washington, DC 20230; telephone: (202) 482–0629 and (202) 482–3693, respectively.

SUPPLEMENTARY INFORMATION:

Background

On July 2, 2002, the Department published in the **Federal Register** a notice of ''Opportunity to Request an Administrative Review'' of the antidumping duty order on persulfates from the People's Republic of China (PRC) covering the period July 1, 2001, through June 30, 2002. *See Antidumping or Countervailing Duty Order, Finding, or Suspended Investigation; Opportunity To Request Administrative Review,* 67 FR 44172 (July 1, 2002).

On July 31, 2002, in accordance with 19 CFR 351.213(b), the petitioner, FMC Corporation, requested an administrative review of Shanghai Ai Jian Import & Export Corporation. In addition, on July 31, 2002, in accordance with 19 CFR 351.222(b), Shanghai Ai Jian Import and Export Corporation and Shanghai Ai Jian Reagent Works (collectively, Ai Jian) requested an administrative review. In its request for an administrative review, Ai Jian also requested that the Department partially revoke the antidumping duty order on persulfates with respect to Ai Jian's sales of subject merchandise. We published a notice of initiation of this review on August 27, 2002. See *Initiation of Antidumping and Countervailing Duty Administrative Reviews and Requests for Revocation in Part,* 67 FR 55000 (August 27, 2002) (Persulfates Initiation).

On August 1, 2002, we issued an antidumping questionnaire to Ai Jian. We received Ai Jian's timely responses to sections A, C and D of the questionnaire on October 15, 2002.

We issued a supplemental questionnaire to Ai Jian on December 10, 2002. We received Ai Jian's response to this supplemental questionnaire on January 6, 2003.

On January 10, 2003, the petitioner submitted publicly available information for consideration in valuing the factors of production. On January 17, 2003, Ai Jian provided rebuttal comments regarding the surrogate values submitted by the petitioner.

On February 12, 2003, we issued a second supplemental questionnaire to Ai Jian.

On February 19, 2003, the petitioners submitted information regarding the purported impact revocation of the antidumping duty order on Ai Jian would have upon the domestic industry.

On February 27, 2003, Ai Jian submitted a response to the second supplemental questionnaire.

On March 11, 2003, we issued a third supplemental questionnaire to Ai Jian. Ai Jian submitted its response on March 19, 2003.

Also, on March 19, 2003, Ai Jian withdrew its request for revocation. Accordingly, we have not considered this request further in this segment of the proceeding.

Scope of Review

The products covered by this review are persulfates, including ammonium, potassium, and sodium persulfates. The chemical formula for these persulfates are, respectively, $(NH_4)_2S_2O_8$, $K_2S_2O_8$, and $Na_2S_2O_8$. Potassium persulfates are currently classifiable under subheading 2833.40.10 of the *Harmonized Tariff Schedule of the United States* (HTSUS). Sodium persulfates are classifiable under HTSUS subheading 2833.40.20. Ammonium and other persulfates are classifiable under HTSUS subheadings 2833.40.50 and 2833.40.60. Although the HTSUS subheadings are provided for convenience and customs purposes, the written description of the scope of this review is dispositive.

Separate Rates

It is the Department's policy to assign all exporters of the merchandise subject to review in non-market-economy (NME) countries a single rate, unless an exporter can demonstrate an absence of government control, both in law and in fact, with respect to exports. To establish whether an exporter is sufficiently independent of government control to be entitled to a separate rate, the Department analyzes the exporter in light of the criteria established in the *Final Determination of Sales at Less Than Fair Value: Sparklers From the People's Republic of China,* 56 FR 20588 (May 6, 1991) (*Sparklers*), as amplified in the *Final Determination of Sales at Less Than Fair Value: Silicon Carbide From the People's Republic of China,* 59 FR 22585 (May 2, 1994) (*Silicon Carbide*). Evidence supporting, though not requiring, a finding of de jure absence of government control over export activities includes: (1) An absence of restrictive stipulations associated with an individual exporter's business and export licenses; (2) any legislative enactments decentralizing control of companies; and (3) any other formal measures by the government decentralizing control of companies. With respect to evidence of a de facto absence of government control, the Department considers the following four factors: (1) Whether the respondent sets its own export prices independently from the government and other exporters; (2) whether the respondent can retain the proceeds from its export sales; (3) whether the respondent has the authority to negotiate and sign contracts; and (4) whether the respondent has autonomy from the government regarding the selection of management. *See Silicon Carbide*, 59 FR at 22587; *see also Sparklers*, 56 FR at 20589.

With respect to Ai Jian, for purposes of our final results covering the period of review (POR) July 1, 2000, through June 30, 2001, the Department determined that there was an absence of de jure and de facto government control of its export activities and determined that it warranted a company-specific dumping margin. *See Persulfates From the People's Republic of China: Final Results of Antidumping Duty Administrative Review*, 68 FR 6712, (February 10, 2003) (*Persulfates Fourth*

Review Final). For purposes of this POR, Ai Jian has responded to the Department's request for information regarding separate rates. We have found that the evidence on the record is consistent with the final results in *Persulfates Fourth Review Final* and continues to demonstrate an absence of government control, both in law and in fact, with respect to Ai Jian's exports, in accordance with the criteria identified in *Sparklers* and *Silicon Carbide*. Therefore, we have granted Ai Jian a separate rate for purposes of this administrative review.

Export Price

For Ai Jian, we calculated export price (EP) in accordance with section 772(a) of the Tariff Act of 1930, as amended (the Act), because the subject merchandise was sold directly to the first unaffiliated purchaser in the United States prior to importation and constructed export price methodology was not otherwise warranted based on the facts of record. We calculated EP based on packed, cost-insurance-freight (CIF) U.S.-port, or free-on-board, PRC-port prices to unaffiliated purchasers in the United States, as appropriate. We made deductions from the starting price, where appropriate, for ocean freight services which were provided by market economy suppliers. We also deducted from the starting price, where appropriate, an amount for foreign inland freight, foreign brokerage and handling, and marine insurance expenses. As these movement services were provided by NME suppliers, we valued them using Indian rates. For further discussion of our use of surrogate data in an NME proceeding, as well as selection of India as the appropriate surrogate country, see the ''Normal Value'' section of this notice, below.

For foreign inland freight, we obtained publicly-available information which was published in the February through June 2002 editions of *Chemical Weekly*. For foreign brokerage and handling expenses, we used price quotes obtained by the Department in the 1998–1999 antidumping duty investigation and recently used in the 2001–2002 antidumping duty administrative review of synthetic indigo from the People's Republic of China. *See Notice of Preliminary Determination of Sales at Less Than Fair Value and Postponement of Final Determination: Synthetic Indigo From the People's Republic of China*, 64 FR 69723 (December 14, 1999)[1] and *Synthetic Indigo From the People's Republic of China: Preliminary Results of Antidumping Duty Administrative Review*, 68 FR 11371, 11372 (March 10, 2003). We inflated the per kilogram price quote (in rupees) to the POR using WPI data. For marine insurance, we valued marine insurance using price quotes obtained from Roanoke Trade Services, Inc., a provider of marine insurance. *See* the memorandum to the File from Gregory Kalbaugh entitled ''Marine Insurance Rates,'' in the administrative review of sebacic acid from the PRC, dated July 9, 2002, and the memorandum to the File from Michael Strollo entitled ''Preliminary Valuation of Factors of Production for the Preliminary Results of the 2000–2001 Administrative Review of Persulfates from the People's Republic of China,'' dated July 31, 2002 (FOP Memo), which are on file in the Central Records Unit (CRU), Room B–099 of the main Commerce building.

Normal Value

Section 773(c)(1) of the Act provides that the Department shall determine the normal value (NV) using a factors-of-production methodology if: (1) The merchandise is exported from an NME country; and (2) the information does not permit the calculation of NV using home-market prices, third-country prices, or constructed value (CV) under section 773(a) of the Act.

The Department has treated the PRC as an NME country in all previous antidumping cases. Furthermore, available information does not permit the calculation of NV using home market prices, third country prices, or CV under section 773(a) of the Act. In accordance with section 771(18)(C)(i) of the Act, any determination that a foreign country is an NME country shall remain in effect until revoked by the administering authority. None of the parties to this proceeding has contested such treatment in this review. Therefore, we treated the PRC as an NME country for purposes of this review and calculated NV by valuing the factors of production in a surrogate country.

Section 773(c)(4) of the Act and 19 CFR 351.408 direct us to select a surrogate country that is at a level of economic development comparable to that of the PRC. On the basis of per capita gross domestic product (GDP), the growth rate in per capita GDP, and the national distribution of labor, we find that India is at a level of economic development comparable to that of the PRC. *See* the November 20, 2002, memorandum from Jeffrey May to Louis Apple entitled ''Surrogate Country Selection,'' which is on file in the CRU.

Section 773(c)(4) of the Act also requires that, to the extent possible, the Department use a surrogate country that is a significant producer of merchandise comparable to persulfates. For purposes of the most recent segment of this proceeding, we found that India was a producer of persulfates based on information submitted by the respondent. *See Persulfates From the People's Republic of China: Preliminary Results of Antidumping Duty Administrative Review and Notice of Partial Rescission*, 67 FR 50866, 50868 (August 6, 2002).[2] For purposes of this administrative review, we continue to find that India is a significant producer of persulfates based on information submitted by both the respondent and the petitioner. We find that India fulfills both statutory requirements for use as the surrogate country and continue to use India as the surrogate country in this administrative review. We have used publicly available information relating to India to value the various factors of production.

For purposes of calculating NV, we valued PRC factors of production in accordance with section 773(c)(1) of the Act. Factors of production include, but are not limited to: (1) Hours of labor required; (2) quantities of raw materials employed; (3) amounts of energy and other utilities consumed; and (4) representative capital cost, including depreciation. In examining surrogate values, we selected, where possible, the publicly available value which was: (1) An average non-export value; (2) representative of a range of prices within the POR or most contemporaneous with the POR; (3) product-specific; and (4) tax-exclusive. For a more detailed explanation of the methodology used in calculating various surrogate values, see the FOP Memo. In accordance with this methodology, we valued the factors of production as follows:

To value ammonium sulfate, caustic soda, and sulfuric acid, we used public information from the Indian publication *Chemical Weekly*, as provided by the petitioner in its January 10, 2003, submission. For caustic soda and sulfuric acid, because price quotes reported in *Chemical Weekly* are for chemicals with a 100 percent concentration level, we made chemical purity adjustments according to the particular concentration levels of

[1] This was unchanged in the final determination. *See Synthetic Indigo From the People's Republic of China: Notice of Final Determination of Sales at Less Than Fair Value,* 65 FR 25706 (May 3, 2000).

[2] This finding was unchanged in the final results. *See Persulfates Fourth Review Final.*

caustic soda and sulfuric acid used by Shanghai Ai Jian Reagent Works (AJ works), Ai Jian's PRC supplier. Where necessary, we adjusted the values reported in *Chemical Weekly* to exclude sales and excise taxes. For potassium sulfate and anhydrous ammonia, we relied on import prices contained in the *Monthly Statistics of the Foreign Trade of India* (*Monthly Statistics*). All values were contemporaneous with the POR; therefore, it was not necessary to adjust for inflation.

During the POR, AJ Works self-produced ammonium persulfates, which is a material input in the production of potassium persulfates and sodium persulfates. In order to value ammonium persulfates, we calculated the sum of the materials, labor, and energy costs based on the usage factors submitted by AJ Works in its questionnaire responses. Consistent with our methodology used in *Persulfates Fourth Review Final*, we then applied this value to the reported consumption amounts of ammonium persulfates used in the production of potassium and sodium persulfates.

We valued labor based on a regression-based wage rate, in accordance with 19 CFR 351.408(c)(3).

To value electricity, we used the 2000–2001 average rate for industrial consumption as published in the Government of India's Planning Commission report, *The Working of State Electricity Boards & Electricity Departments Annual Report (2001–02)*. For further discussion, see the FOP Memo.

To value water, we relied on public information reported in the October 1997 publication of *Second Water Utilities Data Book: Asian and Pacific Region*. To value coal, we relied on import prices contained in the March 2001 annual volume of *Monthly Statistics*. We adjusted the values to reflect inflation up to the POR using the WPI published by the IMF.

For the reported packing materials—polyethylene bags, woven bags, polyethylene sheet/film and liner, fiberboard, paper bags, and wood pallets—we relied upon Indian import data from the *Monthly Statistics*.

We made adjustments to account for freight costs between the suppliers and AJ Works' manufacturing facilities for each of the factors of production identified above. In accordance with our practice, for inputs for which we used CIF import values from India, we calculated a surrogate freight cost using the shorter of the reported distances either from the closest PRC ocean port to the factory or from the domestic supplier to the factory. *See Final Determination of Sales at Less Than Fair Value: Certain Cut-to-Length Carbon Steel Plate From the People's Republic of China,* 62 FR 61964, 61977 (November 20, 1997) and the Court of Appeals for the Federal Circuit's decision in *Sigma Corp.* v. *United States,* 117 F.3d 1401 (Fed. Cir. 1997).

For factory overhead, selling, general, and administrative expenses (SG&A), and profit, we relied on the experience of a producer of identical merchandise, Gujarat Persalts (P) Ltd. (Gujarat), as reflected in its 2000–2001 financial statements.[3] *See* the FOP Memo. Consistent with our practice, we did not rely on the 2001–2002 financial statements of a producer of comparable merchandise (*i.e.*, National Peroxide Ltd.), as requested by the petitioner, because this producer did not produce persulfates during its fiscal year.[4] *See Persulfates Fourth Review Final* and accompanying decisionmemorandum at *Comments 8, 9, and 10.* Because the petitioner has provided no new information which would cause us to reconsider our decision on this issue, we do not find any reason to alter our decision in the instant review.

Preliminary Results of Review

We preliminarily determine that the following margins exist for the period July 1, 2001, through June 30, 2002:

Manufacturer/exporter	Margin (percent)
Shanghai Ai Jian Import & Export Corporation	0.00

The Department will disclose to parties the calculations performed in connection with these preliminary results within five days of the date of publication of this notice. Interested parties may request a hearing within 30 days of the publication. Any hearing, if requested, will be held 44 days after the publication of this notice, or the first workday thereafter. Interested parties may submit case briefs not later than 30 days after the date of publication of this notice. Rebuttal briefs, limited to issues raised in the case briefs, may be filed not later than 35 days after the date of publication of this notice. The Department will publish a notice of the final results of this administrative review, which will include the results of its analysis of issues raised in any such written briefs, within 120 days of the publication of these preliminary results.

The Department will determine and the U.S. Bureau of Customs and Border Protection (BCBP) shall assess antidumping duties on all appropriate entries. The Department will issue appropriate appraisement instructions directly to the BCBP upon completion of this review. The final results of this review will be the basis for the assessment of antidumping duties on entries of merchandise covered by this review and for future deposits of estimated duties.

For assessment purposes in this case, we do not have the information to calculate entered value. Therefore, we have calculated importer-specific duty assessment rates for the merchandise by aggregating the dumping margins calculated for all U.S. sales and dividing this amount by the total quantity of those sales. To determine whether the duty assessment rates were *de minimis* (*i.e.*, less than 0.50 percent), in accordance with the requirement set forth in 19 CFR 351.106(c)(2), we calculated importer-specific *ad valorem* ratios based on the EPs.

Furthermore, the following deposit requirements will be effective upon publication of the final results of this administrative review for all shipments of the subject merchandise entered, or withdrawn from warehouse, for consumption on or after the publication date, as provided by section 751(a)(1) of the Act: (1) The cash deposit rate for Ai Jian will be that established in the final results of this administrative review; (2) for any company previously found to be entitled to a separate rate and for which no review was requested, the cash deposit rate will be the rate established in the most recent review of that company; (3) the cash deposit rate for all other PRC exporters will be 119.02 percent, the PRC-wide rate established in the less than fair value investigation; and (4) for all other non-PRC exporters of subject merchandise from the PRC to the United States, the cash deposit rate will be the rate applicable to the PRC exporter that supplied that non-PRC exporter. These requirements, when imposed, shall remain in effect until publication of the final results of the next administrative review.

[3] Because we believe that SG&A labor is not classified as part of the SG&A costs reflected on Gujarat's financial statements, we have accounted for SG&A labor hours by calculating a dollar-per-MT labor hours amount and adding this amount to SG&A. For further discussion, see the July 31, 2003, memorandum from the Team, entitled ''U.S. Price and Factors of Production Adjustments for the Preliminary Determination.''

[4] As explained in *Persulfates Fourth Review Final,* although the Department generally prefers data which is more contemporaneous with the POR, contemporaneity is not the only criterion taken into consideration. The Department's NME practice establishes a preference for selecting surrogate value sources that are producers of identical merchandise. *See id.*

Notification of Interested Parties

This notice serves as a preliminary reminder to importers of their responsibility under 19 CFR 351.402(f) to file a certificate regarding the reimbursement of antidumping duties prior to liquidation of the relevant entries during this review period. Failure to comply with this requirement could result in the Department's presumption that reimbursement of antidumping duties occurred and the subsequent assessment of double antidumping duties.

This administrative review is issued and published in accordance with sections 751(a)(1) and 777(i)(1) of the Act.

Dated: July 25, 2003.

Joseph A. Spetrini,

Acting Assistant Secretary for Grant Aldonas, Under Secretary.

[FR Doc. 03–19516 Filed 7–30–03; 8:45 am]

BILLING CODE 3510–DS–P

DEPARTMENT OF COMMERCE

International Trade Administration

[A-588–046]

Notice of Initiation of Antidumping Duty Changed Circumstances Review: Polychloroprene Rubber from Japan

AGENCY: Import Administration, International Trade Administration, Department of Commerce.

SUMMARY: In accordance with section 751(b) of the Tariff Act of 1930, as amended, (the Act) and 19 CFR 351.216 (2003), Showa Denko Elastomers K.K. (SDEL) and Showa Denko K.K. (SDK) requested that the Department of Commerce (the Department) conduct an expedited changed circumstances review of the antidumping duty finding on polychloroprene rubber (PR) from Japan. In response to this request, the Department is initiating a changed circumstances review of the above-referenced finding.

EFFECTIVE DATE: July 31, 2003.

FOR FURTHER INFORMATION CONTACT: Zev Primor or Ronald Trentham, AD/CVD Enforcement, Group II, Office 4, Import Administration, International Trade Administration, U.S. Department of Commerce, 14th Street and Constitution Avenue, NW, Washington, DC 20230; telephone (202) 482–4114 or (202) 482–6320, respectively.

SUPPLEMENTARY INFORMATION:

Background

On December 6, 1973, the Department of Treasury published in the **Federal Register** (38 FR 33593) the antidumping finding on PR from Japan. On June 17, 2003, SDEL and SDK submitted a letter stating that they are the successor-in-interest to Showa DDE Manufacturing KK (SDEM) and DDE Japan Kabushiki Kaisha (DDE Japan) and, as such, entitled to receive the same antidumping treatment as these companies have been accorded. Accordingly, SDEL/SDK requested that the Department conduct an expedited changed circumstances review of the antidumping duty finding on PR from Japan pursuant to section 751(b)(1) of the Act and 19 CFR 351.221(c)(3)(ii) of the Department's regulations.

Scope of Review

Imports covered by this review are shipments of PR, an oil resistant synthetic rubber also known as polymerized chlorobutadiene or neoprene, currently classifiable under items 4002.42.00, 4002.49.00, 4003.00.00, 4462.15.21 and 4462.00.00 of the *Harmonized Tariff Schedule of the United States* (HTSUS). HTSUS item numbers are provided for convenience and for U.S. Burea of Customs and Border Protection (BCBP). The Department's written descriptions of the scope remain dispositive.

Initiation of Antidumping Duty Changed Circumstances Review

Pursuant to section 751(b)(1) of the Act, the Department will conduct a changed circumstances review upon receipt of information concerning, or a request from an interested party for a review of, an antidumping duty finding which shows changed circumstances sufficient to warrant a review of the order. Information submitted by SDEL/SDK regarding a change in ownership of the prior SDEM/DDE Japan joint venture shows changed circumstances sufficient to warrant a review. *See* 19 CFR 351.216(c) (2003).

In antidumping duty changed circumstances reviews involving a successor-in-interest determination, the Department typically examines several factors including, but not limited to, changes in: (1) management; (2) production facilities; (3) supplier relationships; and (4) customer base. *See Brass Sheet and Strip from Canada: Notice of Final Results of Antidumping Administrative Review*, 57 FR 20460, 20462 (May 13, 1992) (*Canadian Brass*). While no single factor or combination of factors will necessarily be dispositive, the Department generally will consider the new company to be the successor to the predecessor company if the resulting operations are essentially the same as those of the predecessor company. *See, e.g., Industrial Phosphoric Acid from Israel: Final Results of Changed Circumstances Review*, 59 FR 6944, 6945 (February 14, 1994), and *Canadian Brass*, 57 FR 20460. Thus, if the record evidence demonstrates that, with respect to the production and sale of the subject merchandise, the new company operates as the same business entity as the predecessor company, the Department may assign the new company the cash deposit rate of its predecessor. *See, e.g., Fresh and Chilled Atlantic Salmon from Norway: Final Results of Changes Circumstances Antidumping Duty Administrative Review*, 64 FR 9979, 9980 (March 1, 1999). Although SDEL/SDK submitted information indicating, allegedly, that with respect to subject merchandise, it operates in the same manner as its predecessor, SDEM/DDE Japan, that information is lacking any supporting documents. See Memoranda from Zev Primor to The File ''Polychloroprene Rubber from Japan: Request for Additional Information for Changed Circumstances Review'' dated June 30 and July 15, 2003.

Concerning SDEL/SDK's request that the Department conduct an expedited antidumping duty changed circumstances review, the Department has determined that it would be inappropriate to expedite this action by combining the preliminary results of review with this notice of initiation, as permitted under 19 CFR 351.221(c)(3)(ii). Because of the absence of evidence to support SDEL/SDK's claims, the Department finds that an expedited proceeding is impracticable. Therefore, the Department is not issuing the preliminary results of its antidumping duty changed circumstances review at this time.

The Department will publish in the **Federal Register** a notice of preliminary results of antidumping duty changed circumstances review, in accordance with 19 CFR 351.221(b)(4) and 19 CFR 351.221(c)(3)(I). This notice will set forth the factual and legal conclusions upon which our preliminary results are based and a description of any action proposed based on those results. Pursuant to 19 CFR 351.221(b)(4)(ii), interested parties will have an opportunity to comment on the preliminary results of review. In accordance with 19 CFR 351.216(e), the Department will issue the final results of its antidumping duty changed circumstances review not later than 270 days after the date on which the review is initiated.

During the course of this antidumping duty changed circumstances review, we will not change the cash deposit requirements for the merchandise

subject to review. The cash deposit will only be altered, if warranted, pursuant to the final results of this review.

This notice of initiation is in accordance with sections 751(b)(1) of the Act and 19 CFR 351.221(b)(1) of the Department's regulations.

Dated: July 24, 2003.

Joseph A. Spetrini,

Acting Assistant Secretary for Grant Aldonas, Under Secretary.

[FR Doc. 03–19515 Filed 7–30–03; 8:45 am]

BILLING CODE 3510–DS–S

DEPARTMENT OF COMMERCE

National Oceanic and Atmospheric Administration

[I.D. 071003D]

Marine Mammals; Notice Announcing Preparation of an Environmental Assessment for a Take Reduction Plan for the Western North Atlantic Coastal Stock of Bottlenose Dolphins

AGENCY: National Marine Fisheries Service (NMFS), National Oceanic and Atmospheric Administration (NOAA), Commerce.

ACTION: Notice announcing preparation of an Environmental Assessment(EA).

SUMMARY: NMFS announces its intention to prepare a draft EA, in accordance with the National Environmental Policy Act (NEPA), for the development of a Bottlenose Dolphin Take Reduction Plan (BDTRP) to reduce the incidental mortality and serious injury of the western North Atlantic coastal stock of bottlenose dolphins (bottlenose dolphin) in commercial fisheries to below the potential biological removal(PBR)level for the stock. Through a previous notice, NMFS informed the public of the agency's intent to prepare an Environmental Impact Statement (EIS). NMFS has since received information indicating that in this case an EA is a more appropriate analysis under NEPA.

DATES: See **SUPPLEMENTARY INFORMATION** section for information on the comment period for the EA.

ADDRESSES: For additional information on the BDTRP, contact Katie Moore, NMFS Southeast Regional Office, 9721 Executive Center Drive N, St. Petersburg, FL 33702, fax: 727–570–5517; Brian Hopper, NMFS Northeast Regional Office, One Blackburn Drive, Gloucester, MA 01930–2298, fax: 978 281–9394; or Tanya Dobrzynski, NMFS Office of Protected Resources, 1315 East-West Highway, Silver Spring, MD 20910, fax: 301–713–0376.

FOR FURTHER INFORMATION CONTACT: Katie Moore, phone: 727–570–5312; or Tanya Dobrzynski, phone: 301–713–2322. Individuals who use a telecommunications device for the deaf (TDD) may call the Federal Information Relay Service at 1–800–877–8339 between 8 a.m. and 4 p.m. Eastern time, Monday through Friday, excluding Federal holidays.

SUPPLEMENTARY INFORMATION:

Electronic Access

For additional information on western North Atlantic coastal bottlenose dolphins, refer to the final 2002 Atlantic and Gulf of Mexico Marine Mammal Stock Assessment Reports (SARs). The reports can be accessed via the Internet at: *http://www.nmfs.noaa.gov/prot_res/PR2/Stock_Assessment_Program.html*. For more information on the BDTRP, access the BDTRP site at: *http://www.nmfs.noaa.gov/prot_res/PR2/Health_html.*

On July 22, 2002, NOAA Fisheries published in the **Federal Register** a Notice of Intent (NOI) to Prepare an Environmental Impact Statement(EIS)(67 FR 47772) for the development of a BDTRP. At that time, given the best available information, NMFS believed that the regulations to implement the BDTRP would have a significant adverse impact on participants in the related fisheries, as well as a significant beneficial impact on the western North Atlantic coastal stock of bottlenose dolphin. On September 19, 2002, NMFS published a notice reopening the comment period for an additional 45 days to ensure that the public had ample opportunity to provide comments. Since publication of the NOI, NMFS has received additional information on the status of the western North Atlantic Bottlenose Dolphin stock complex. New abundance estimates indicate an increase in stock abundance and an associated increase in potential biological removal (PBR) for 6 of the 8 management units within the bottlenose dolphin stock complex. Because of this new information, NMFS believes that take reduction measures necessary to reach PBR are much less likely to significantly impact either the stock or the related fisheries, as previously believed.

Pursuant to the National Oceanic and Atmospheric Administration (NOAA's) Administrative Order 216–6, when the agency determines not to pursue a proposed action after a notice of intent has been published, a second notice should be published to inform the public of the change. Through this action, NMFS is providing notice that it will prepare an EA rather than an EIS as previously announced. The purpose of an EA is to determine whether significant environmental impacts could result from a proposed action. If the action is determined not to be significant, the EA and resulting Finding of No Significant Impact will be the final environmental documents required by the NEPA. If the EA reveals that significant environmental impacts may be reasonably expected to occur, then the agency will prepare an EIS. Through comments received on the NOI for the EIS and the associated public review process for the draft EA and proposed rule to implement the BDTRP, the agency will receive feedback on its determination of significance.

NMFS intends to develop and implement a BDTRP pursuant to section 118 of the Marine Mammal Protection Act (MMPA). The purpose of the proposed action is to reduce the incidental mortality and serious injury of the western North Atlantic coastal stock of bottlenose dolphins in commercial fisheries to below the PBR level for the stock. The BDTRP will address mortality and serious injury of western North Atlantic coastal bottlenose dolphins incidentally taken in the following Category I and II commercial fisheries: Mid-Atlantic coastal gillnet; North Carolina inshore gillnet; Southeast Atlantic gillnet; Southeastern U.S. Atlantic shark gillnet; Atlantic blue crab trap/pot; Mid-Atlantic haul/beach seine; North Carolina long haul seine; North Carolina roe mullet stop net; and Virginia pound net. The take reduction plan is being developed pursuant to the process described in section 118(f) of the MMPA.

Section 118(f) of the MMPA requires NMFS to convene a take reduction team to assist in the recovery and prevent the depletion of each strategic stock that interacts with Category I or II fisheries. The western North Atlantic coastal stock of bottlenose dolphins is a strategic stock. For more information about the stock, consult the SAR, as described in the Electronic Access portion of this notice. Strategic status was initially assigned because the stock is designated as depleted under the MMPA as a result of a large-scale mortality event that occurred in 1987–1988 (58 FR 17789, April 6, 1993). The stock also qualifies as strategic because mortality and serious injury of this stock incidental to commercial fishing exceeds the PBR level of the stock.

The immediate goal of a take reduction plan for a strategic stock of marine mammals is to reduce, within 6

months of plan implementation, the incidental mortality or serious injury of marine mammals taken in the course of commercial fishing operations to levels less than the PBR level (16 U.S.C. 1387). The long-term goal of the plan is to reduce, within 5 years of its implementation, the incidental mortality or serious injury of marine mammals taken in the course of commercial fishing operations to insignificant levels approaching a zero mortality and serious injury rate, taking into account the economics of the fishery, the availability of existing technology, and existing state or regional fishery management plans (16 U.S.C. 1387).

The Secretary of Commerce (Secretary) shall establish a take reduction team to address mortality or serious injury of strategic stocks of marine mammals interacting with Category I or II fisheries. Not later than 6 months after the date of establishment of a take reduction team, the Team is required to submit a draft take reduction plan for such stock to the Secretary, consistent with the other provisions of section 118 of the MMPA. The Secretary is required to take the draft take reduction plan submitted by the team into consideration and publish in the **Federal Register** the draft plan submitted by the team, any changes proposed by the Secretary with an explanation of the reasons therefor, and proposed regulations to implement such plan, for public review and comment.

Public Scoping Process

The BDTRT was established on November 7, 2001. A **Federal Register** notice announcing the convening of the BDTRT and its first meeting was published on October 24, 2001 (66 FR 53782). The Team met a total of five times before delivering consensus recommendations for the BDTRP to NMFS on May 7, 2002, and also met in April 2003 to review updated bottlenose dolphin abundance information and to augment the original recommendations where they did not meet the statutory requirements of the MMPA. The dates of the six meetings were: November 7–8, 2001; January 23–25, 2002; February 27–March 1, 2002; March 27–28, 2002; April 23–25, 2002; and April 1–3, 2003. Team meetings were open to the public and a public comment period was held following each day of meetings. Additionally, NMFS held three public meetings with potential Team members and other interested members of the public on May 15–16, 2001; July 11–12, 2001; and November 6, 2001. No additional scoping meetings are scheduled.

NMFS hired a commercial fisheries liaison to engage the commercial fishing sector by sharing information about the purpose of the Team, meeting dates and locations, and the discussion topics for upcoming meetings. The liaison used dockside visits, commercial fishing publications, and a commercial fishing expo to disseminate the information. NMFS generated and distributed a fact sheet about the Team and upcoming Team meetings, developed a Web site regarding the issue, and used mail and electronic mail to distribute information about meeting logistics and summaries to over 200 interested persons.

Analysis of Alternatives

NMFS will be analyzing alternatives that are reasonably expected to reduce mortality and serious injury of western North Atlantic coastal bottlenose dolphins to less than the PBR level within 6 months of implementation of the BDTRP. NMFS will be analyzing all reasonable alternatives, which include a status quo alternative and the recommendations submitted by the Team. The Team's recommendations can be obtained by contacting Katie Moore or Tanya Dobrzynski (see **FOR FURTHER INFORMATION CONTACT**).

NMFS will provide an opportunity for comment on the draft EA in conjunction with publication of the proposed regulations to implement the BDTRP. At that time, NMFS will also consider public comments received during the public comment period on the NOI to prepare an EIS for the BDTRP.

Dated: July 25, 2003.

Rebecca Lent,

Assistant Administrator for Regulatory Programs, National Marine Fisheries Service.

[FR Doc. 03–19521 Filed 7–30–03; 8:45 am]

BILLING CODE 3510–22–S

DEPARTMENT OF COMMERCE

National Oceanic and Atmospheric Administration

[I.D. 072403B]

New England Fishery Management Council; Public Meetings

AGENCY: National Marine Fisheries Service (NMFS), National Oceanic and Atmospheric Administration (NOAA), Commerce.

ACTION: Notice of public meeting.

SUMMARY: The New England Fishery Management Council (Council) is scheduling a public meeting of its Herring Advisory Panel in August, 2003.

DATES: The meeting will held on Wednesday, August 20, 2003, at 10 a.m.

ADDRESSES: The meeting will be held at the Sheraton South Portland, 363 Main Mall Road, South Portland, ME 04106; telephone: (207) 775-6161.

Council address: New England Fishery Management Council, 50 Water Street, Newburyport, MA 01950.

FOR FURTHER INFORMATION CONTACT: Paul J. Howard, Executive Director, New England Fishery Management Council (978) 465-0492.

SUPPLEMENTARY INFORMATION: The panel will review progress to date on development of alternatives for analysis in Amendment 1 to the Herring Fishery Management Plan (FMP). They will also develop Advisory Panel recommendations for the Herring Committee to consider regarding the range of alternatives for analysis in Amendment 1.

Although non-emergency issues not contained in this agenda may come before this group for discussion, those issues may not be the subject of formal action during this meeting. Action will be restricted to those issues specifically listed in this notice and any issues arising after publication of this notice that require emergency action under section 305(c) of the Magnuson-Stevens Act, provided the public has been notified of the Council's intent to take final action to address the emergency.

Special Accommodations

This meeting is physically accessible to people with disabilities. Requests for sign language interpretation or other auxiliary aids should be directed to Paul J. Howard (see **ADDRESSES**) at least 5 days prior to the meeting dates.

Dated: July 25, 2003.

Richard W. Surdi,

Acting Director, Office of Sustainable Fisheries, National Marine Fisheries Service.

[FR Doc. 03–19518 Filed 7–30–03; 8:45 am]

BILLING CODE 3510–22–S

DEPARTMENT OF COMMERCE

National Oceanic and Atmospheric Administration

[I.D. 072403A]

North Pacific Fishery Management Council; Public Meeting

AGENCY: National Marine Fisheries Service (NMFS), National Oceanic and Atmospheric Administration (NOAA), Commerce.

ACTION: Notice of a public meeting.

SUMMARY: The North Pacific Fishery Management Council (Council) Improved Retention/Improved

Utilization Technical Committee will meet in Seattle, WA.

DATES: The meetings will be held on August 25, 26, 2003, from 9 a.m. to 5 p.m., and August 27, 2003, from 9 a.m. to noon.

ADDRESSES: The meetings will be held at the Alaska Fisheries Science Center, 7600 Sand Point Way NE, Building 9 (Auditorium), Seattle, WA 98115.

Council address: North Pacific Fishery Management Council, 605 W. 4th Ave., Suite 306, Anchorage, AK 99501–2252.

FOR FURTHER INFORMATION CONTACT: Council staff, Phone: 907–271–2809.

SUPPLEMENTARY INFORMATION: The Committee is scheduled to discuss implementation aspects of a minimum groundfish retention standard, and development of fishery cooperatives, including the following: (1) review action on Amendment C and discuss implementation issues; (2) ID options to achieve pollock maximum retainable bycatch allowance (adjustment) objectives; (3) discuss and develop options for the <125′ Head & Gut boats; and (4) review discussion paper/alternatives/analytical approach for Amendment A and provide recommendations in October.

Although non-emergency issues not contained in this agenda may come before this group for discussion, those issues may not be the subject of formal action during this meeting. Action will be restricted to those issues specifically identified in this notice and any issues arising after publication of this notice that require emergency action under section 305(c) of the Magnuson-Stevens Fishery Conservation and Management Act, provided the public has been notified of the Council's intent to take final action to address the emergency.

Special Accommodations

These meetings are physically accessible to people with disabilities. Requests for sign language interpretation or other auxiliary aids should be directed to Gail Bendixen at 907–271–2809 at least 7 working days prior to the meeting date.

Dated: July 25, 2003.

Richard W. Surdi,

Acting Director, Office of Sustainable Fisheries, National Marine Fisheries Service.

[FR Doc. 03–19517 Filed 7–30–03; 8:45 am]

BILLING CODE 3510–22–S

DEPARTMENT OF COMMERCE

National Oceanic and Atmospheric Administration

[I.D. 061003A]

Fisheries of the Exclusive Economic Zone off Alaska; Groundfish of the Gulf of Alaska; Exempted Fishing Permit

AGENCY: National Marine Fisheries Service (NMFS), National Oceanic and Atmospheric Administration (NOAA), Commerce.

ACTION: Issuance of an Exempted Fishing Permit (EFP).

SUMMARY: NMFS announces the issuance of EFP 03–01 to Mr. John Gauvin, principal investigator, and Mr. Brent Paine, Executive Director of the United Catcher Boats Association (applicants). The EFP authorizes the applicants to conduct an experiment in the Bering Sea that will test the effectiveness of salmon excluder devices to reduce salmon bycatch rates in the pollock trawl fishery without significantly lowering catch rates of pollock. This EFP is necessary to provide information not otherwise available through research or commercial fishing operations. The intended effect of this action is to promote the purposes and policies of the Magnuson-Stevens Fishery Conservation and Management Act (Magnuson-Stevens Act).

ADDRESSES: Copies of the EFP and the Environmental Assessment (EA) prepared for the EFP are available from Lori J. Durall, Alaska Region, NMFS, P.O. Box 21668, Juneau, AK 99802.

FOR FURTHER INFORMATION CONTACT: Melanie Brown, 907–586–7228 or *melanie.brown@noaa.gov.*

SUPPLEMENTARY INFORMATION: The Fishery Management Plan for the Groundfish Fishery of the Bering Sea and Aleutian Islands Management Area authorizes the issuance of EFPs to fish for groundfish in a manner that would otherwise be prohibited under existing regulations. The procedures for issuing EFPs are set out at 50 CFR 679.6 and 600.745(b).

On April 15, 2003, NMFS announced in the **Federal Register** the receipt of an application for an EFP (68 FR 18187). The applicants requested authorization to test the effectiveness of salmon excluder devices intended to reduce salmon bycatch rates in the pollock trawl fishery, without reducing the catch of pollock. The purpose of this research is to assist industry in developing gear modifications that will reduce the bycatch of salmon in the pollock fishery in the Bering Sea. This EFP will provide information not otherwise available through research or commercial fishing operations because it is not economically feasible for vessels to participate in an experiment of this extent and rigor during the commercial fisheries.

The Regional Administrator has approved the EFP application and has issued EFP 03–01 to the applicants. Details of the experiment are in the environmental assessment prepared for this action (see **ADDRESSES**). The experiment will take place in two parts to allow for testing of devices specific to chum salmon and chinook salmon for approximately 12–15 days each. The chum salmon field test portion of the EFP is expected to occur mid-September through October 2003. The chinook salmon excluder test is expected to occur January 20, 2004, through March 31, 2004. The location for the test will be the common areas for catcher vessels to fish for pollock in the Bering Sea at those times of the year.

In order to conduct the test in accordance with the experimental design developed in cooperation with NMFS Alaska Fisheries Science Center, the applicants are exempted from several groundfish fisheries regulations at 50 CFR part 679. Salmon taken during the experiment will not be counted toward the chinook and non-chinook bycatch limits under 50 CFR 679.21(e)(1)(vii) and (viii). The majority of the non-chinook salmon taken is chum salmon. The taking of salmon during the experiment is crucial for determining the effectiveness of the device. The potential exists that the amount of pollock trawl salmon bycatch taken by the industry during the EFP period will approach or exceed the salmon bycatch limits. The additional salmon taken during the experiment would create an additional burden on the pollock trawl industry, if the EFP salmon is counted toward the salmon bycatch limits.

Groundfish taken under the EFP will not be applied to the total allowable catch (TAC) limit specified in the annual harvest specifications (§ 679.20). The amount taken is expected to result in total harvests well below the acceptable biological catch (ABC) amounts for the BSAI. The applicants have also requested an exemption from closures of the Chinook Salmon Savings Area and the Chum Salmon Savings Area. (§§ 679.21(e)(7)(vii) and (viii), and 679.22(a)(10)). The experiment must be conducted in areas of salmon concentration to ensure a sufficient sample size. Known concentrations of

salmon occur in the salmon savings areas which provide ideal locations for conducting the experiment and ensuring the vessel encounters concentrations of salmon.

Because a large portion of the Chinook Salmon Savings Area and Chum Salmon Savings Area falls within the Steller Sea Lion Conservation Area (SCA), the EFP also allows for an exemption from the sector specific closure of the SCA (§ 679.22(a)(7)(vii)). This exemption applies only until the combined harvest of all sectors in the SCA exceeds the combined 28 percent of the annual TAC before April 1 (§ 679.20(a)(5)(i)(B). In 2003 nearly 80,000 mt of pollock SCA quota was not harvested. The experiment will harvest approximately 1,300 mt of groundfish (mostly pollock) during the spring. Catcher vessels over 99 ft (30.2 m) length overall (LOA) harvested all of the 2003 quota available to its sector. The vessel used for the research may be a catcher vessel over 99 ft (30.2 m) LOA, the sector that is likely to be closed out of the SCA based on reaching its quota. Because of the large amount of SCA pollock quota that will likely remain unharvested and limitations on the exemption if the combined sector SCA quota is reached, the exemption from the SCA sector specific closure will have no effect on Steller sea lions.

The EFP also exempts the permit holders from the closure of the Catcher Vessel Operating Area (CVOA) at 50 CFR 679.22(a)(5)(ii). All of the Chum Salmon Savings Area is in the CVOA because of the high rates of chum salmon bycatch that are known to occur in this area. The CVOA is closed to catcher/processors during the pollock B season, June 10 through November 1. If a catcher/processor is chosen to conduct the chum salmon portion of the research, it will need access to the CVOA during the pollock B season to ensure enough chum salmon is encountered to provide a sufficient sample size for the experiment.

The EFP authorizes harvests up to 2,270 mt of groundfish in the Bering Sea in the fall of 2003 and the spring of 2004. These groundfish harvests will not be applied toward the groundfish TAC limits in 2003 or 2004. Approximately 98 percent of the groundfish harvested will be pollock. The 2003 Bering Sea pollock TAC is 1,491,760 metric tons (mt) (68 FR 9907, March 3, 2003) and the 2004 TAC is likely to be over one million mt. The 2003 pollock acceptable biological catch (ABC) for the Bering Sea is 2.33 million mt, well above the TAC and additional harvest anticipated from the experiment. The vessel selected for participation will retain all pollock and may retain other groundfish species in accordance with the maximum retainable incidental catch amounts at § 679.20(e) and (f), using only pollock as the basis species.

Approximately 200 chum salmon and 30 chinook salmon are required to support the experiment, well below the BSAI limits of 33,000 chinook salmon in 2003, 29,000 chinook salmon in 2004, and the annual limit of 42,000 non-chinook salmon (§ 679.21(e)(1)(vii) and (viii)). The authorized salmon bycatch for this experiment is 2,183 non-chinook salmon and 217 chinook salmon. This is above the amount needed to support the experiment, but is necessary to ensure the experiment is not prematurely ended before a sufficient amount of data are collected under conditions of higher than expected rates of salmon bycatch. If the salmon is of acceptable quality, the salmon bycatch will be retained for the Prohibited Species Donation Program under § 679.26. Otherwise, the salmon will be discarded in accordance with § 679.21(b).

The Regional Administrator may terminate the experiment if the groundfish or salmon bycatch limits specified in the permit are exceeded. To ensure no likelihood of adverse effects on Steller sea lions, the experiment may not be conducted in Steller sea lion protection areas that are closed to pollock trawling (68 FR 204, January 2, 2003, corrected 68 FR 24615, May 8, 2003), except as provided for in the SCA. A final report of the result of the experiment will be made available to the public at the end of 2004.

Failure of the permittees to comply with the terms and conditions of the EFP and all applicable provisions of 50 CFR parts 600 and 679, the Magnuson-Stevens Act, or any regulations promulgated thereunder, or any other applicable laws, may be grounds for revocation, suspension, or modification of this permit as well as civil or criminal sanctions imposed under those laws.

Classification

This action is exempt from review under Executive Order 12866 and the Regulatory Flexibility Act (RFA). The analytical requirements of the RFA are inapplicable because prior notice and opportunity for public comment are not required for this notification.

Authority: 16 U.S.C. 1801 *et seq.*

Dated: July 25, 2003.

Bruce C. Morehead,

Acting Director, Office of Sustainable Fisheries, National Marine Fisheries Service.

[FR Doc. 03–19520 Filed 7–30–03; 8:45 am]

BILLING CODE 3510–22–S

DEPARTMENT OF DEFENSE

Office of the Secretary

Notice of Availability of the Ground-Based Midcourse Defense Extended Test Range Final Environmental Impact Statement

AGENCY: Missile Defense Agency, Department of Defense and Federal Aviation Administration, Department of Transportation.

ACTION: Correction notice for the notice of availability.

SUMMARY: This notice amends the notice published in the **Federal Register** on July 15, 2003, (68 FR 41784) on ''Ground-Based Midcourse Extended Test Range Environmental Impact Statement Notice of Availability (NOA).'' This notice revises the published closure date to reflect the original NOA publication date in the **Federal Register** by the U.S. Environmental Protection Agency on July 11, 2003 (68 FR 41338). The corrected NOA closure date is August 11, 2003. All other information remains unchanged.

DATES: A Record of Decision will be issued no earlier than 30 days from July 11, 2003.

FOR FURTHER INFORMATION CONTACT: Please call Mr. Rick Lehner, MDA Director of Communications at (703) 697–8997.

Dated: July 24, 2003.

L.M. Bynum,

Alternate OSD Federal Liaison Officer, Department of Defense.

[FR Doc. 03–19451 Filed 7–30–03; 8:45 am]

BILLING CODE 5001–08–M

DEPARTMENT OF DEFENSE

Office of the Secretary

Defense Science Board

AGENCY: Department of Defense.

ACTION: Notice of Advisory Committee meeting.

SUMMARY: The Defense Science Board Task Force on Quarantining Guidance for the Severe Acute Respiratory Syndrome (SARS) Epidemic will meet in open session September 15, 2003,

from 0930–1200 and from 1300–1500. The Task Force will meet at SAIC, 4001 N. Fairfax Drive, Suite 500, Arlington, VA. The Task Force will review the impact quarantining may have on DoD planning and operations by preventing the flow of personnel and material to areas of concern, eroding relationships with host countries, and impacting our forces through anxieties about family members.

The mission of the Defense Science Board is to advise the Secretary of Defense and the Under Secretary of Defense for Acquisition, Technology & Logistics on scientific and technical matters as they affect the perceived needs of the Department of Defense. At this meeting, the Defense Science Board Task Force will review and evaluate the Department's ability to provide information to integrate public health needs, on behalf of national security. Specifically, the Task Force will review: Existing doctrine and processes by which quarantine policy is generated; required cooperation with non-DoD agencies and non-U.S. government entities, including other countries; the capacity of local commanders to rapidly survey disease status, and establish need, ways and means for quarantine in relation to their assigned missions; methods, technologies and doctrine to allow safe transport of personnel through quarantine areas, and restriction of movement where needed; sample scenarios; coordination and allocation of DoD and non DoD resources to combat SARS; identification and tracking of individuals potentially exposed to SARS; and features of the SARS guidance which may be applicable to future infectious disease outbreaks.

FOR FURTHER INFORMATION CONTACT: CDR David Waugh, USN, Defense Science Board, 3140 Defense Pentagon, Room 3D865, Washington, DC 20301–3140, via e–mail at *david.waugh@osd.mil,* or via phone at (703) 695–4158.

SUPPLEMENTARY INFORMATION: Members of the public who wish to attend the meeting must contact CDR Waugh no later than September 5, 2003, for further information about admission as seating is limited. Additionally, those who wish to make oral comments or deliver written comments should also request to be scheduled, and submit a written text of the comments by September 5, 2003, to allow time for distribution to Task Force members prior to the meeting. Individual oral comments will be limited to five minutes, with the total oral comment period not exceeding 30 minutes.

Dated: July 23, 2003.

Patricia Toppings,

Alternate OSD Federal Register Liaison Officer, Department of Defense.

[FR Doc. 03–19450 Filed 7–30–03; 8:45 am]

BILLING CODE 5001–08–M

DEPARTMENT OF DEFENSE

Department of the Army

DEPARTMENT OF AGRICULTURE

Forest Service

DEPARTMENT OF TRANSPORTATION

Federal Aviation Administration

Notice of Availability (NOA) of the Draft Environmental Impact Statement (DEIS) for the Transformation of the 2d Armored Cavalry Regiment (ACR) and Installation Mission Support, Joint Readiness Training Center (JRTC) and Fork Polk, LA, and Long-Term Military Training Use of Kisatchie National Forest Lands

AGENCY: Department of the Army, DOD; Forest Service, USDA; Federal Aviation Administration, DOT.

ACTION: Notice of availability.

SUMMARY: The Department of the Army, the USDA Forest Service, and the Federal Aviation Administration (FAA) announce the availability of the DEIS for the Transportation of the 2d Armored Cavalry Regiment and Installation Mission Support, Joint Readiness Training Center (JRTC) and Fort Polk, Louisiana, and Long-Term Military Training Use of Kisatchie National Forest Lands. The DEIS evaluates environmental impacts associated with the Army's proposal for implementation force transformation and mission capability enhancements at the installation and at England Industrial Airpark, along with long-term military training use of Kisatchie National Forest lands. The Army's proposed action involves fielding of new vehicles and equipment; construction and improvement of firing ranges, roads, stream crossings, and support facilities; land use agreements and leases; training and deployment of Army troops; and continued environmental stewardship. In addition, the DEIS considers a Forest Service proposal to thin approximately 21,500 acres of upland pine stands on the Vernon Unit, Calcasieu Ranger District of the Kisatchie National Forest to improve habitat conditions for the endangered red-cockaded woodpecker. The FAA proposes to approve amendment of the Alexandria International Airport Layout Plan as influenced by proposed Army projects and activities at England Industrial Airpark.

DATES: The comment period for the DEIS will end 45 days after publication of the NOA in the **Federal Register** by the U.S. Environmental Protection Agency.

ADDRESSES: Written comments or requests for copies of the DEIS may be submitted to: Dan Nance, Fort Polk Public Affairs Office, 7073 Radio Road, Fort Polk, LA 71459–5342; phone: (337) 531–7203; fax: (337) 531–6041; e-mail: *eis@polk.army.mil.*

FOR FURTHER INFORMATION CONTACT: Questions about the DEIS may be directed to: Stacy Basham-Wagner, Joint Agency Liaison, Attention: AFZX–PW–E (Basham-Wagner), 1799 23rd Street, Fort Polk, LA 71459; telephone (337) 531–7458, fax: (337) 531–2627.

SUPPLEMENTAL INFORMATION: In support of Army initiatives to meet evolving security requirements, the Army has designated the 2d ACR to transform as an element of the Interim Force to the 2d Cavalry Regiment, a medium-weight force that will be strategically responsive and more rapidly deployable by air. In addition to transformation of the 2d ACR, other Interim Force units stationed at other Army installations would participate in exercises at JRTC and Fort Polk on a rotational basis. To these ends, the Army proposes to implement force transformation and installation mission support activities at the JRTC and Fort Polk with respect to home station training (maneuver and gunnery exercises for Army units assigned to Fort Polk), rotational unit exercises, and facilities construction. The Army also proposes renewal of a Special Use Permit agreement with the Forest Service for continued use of Kisatchie National Forest lands to support military training. The areas of the Kisatchie National Forest proposed for Army use are known as the Intensive Use Area and Limited Use Area of the Vernon Unit, Calcasieu Ranger District and the Special Limited Use Area (also known as Horse's Head) of the Kisatchie Ranger District.

Proposals for installation mission support involve 20 construction projects that would occur on Army lands, national forest lands, and at England Industrial Airpark in Alexandria, Louisiana. The projects include 13 facilities in the Fort Polk cantonment area, digitization and expansion of the Multi-Purpose Range Complex on Fort Polk's main post, road construction/

improvements and construction of a sniper range in the Intensive Use Area, construction of 20 stream crossings in the Limited Use Area, and 3 deployment support facilities at England Industrial Airpark. The JRTC and Fort Polk also propose to create additional helicopter training areas and to conduct limited types of non-live fire training on private lands. Over a 10-year period, the Forest Service proposes to thin approximately 21,500 acres of upland pine stands in there Intensive Use Area to enhance habitat conditions for the endangered red-cockaded woodpecker.

The Army is the lead agency in preparing the DEIS and the Forest Service and FAA are cooperating agencies. The decision to be made by the Army, based on the results of the EIS and upon consideration of all relevant factors (including mission, cost, technical factors, and environmental considerations), is how to provide for military training, readiness, and facilities requirements while ensuring the sustained use of resources entrusted to the stewardship of the Army. The decision to be made by the Forest Service is what military activities and land uses may occur on national forest lands and how to balance military and non-military uses while sustaining resources entrusted to Forest Service stewardship. The FAA intends to relay on analyses in this EIS to make decisions concerning the Alexandria International Airport Layout Plan as it may be affected by three Army projects proposed to occur at the airport and consequent movement of aircraft, materiel, and personnel through that facility.

The DEIS identifies eight alternatives, two of which are analyzed in detail: (1) The proposed action, summarized above, and (2) a no action alternative.

Comments on the DEIS received during the 45-day comment period will be considered in preparing the Final EIS. Public meetings to solicit comments on the DEIS will be held Baton Rouge, Leesville, and Alexandria, Louisiana. Notification of the times and locations for the public meetings will be published in local newspapers at least 15 days in advance.

Copies of the DEIS are available for review at the following libraries: Allen Parish Library (Oberlin Branch), 320 S. Sixth Street, Oberlin; Beauregard Parish Library, 205 South Washington Avenue, DeRidder, Calcasieu Public Library, 301 W. Claude Street, Lake Charles; East Baton Rouge Parish Library, 7711 Goodwood Boulevard, Baton Rouge; Lafayette Public Library, 301 W. Congress Street, Lafayette; Lincoln Parish Library, 509 West Alabama Avenue, Ruston; Natchitoches Parish Library, 431 Jefferson Street, Natchitoches; New Orleans Public Library (Orleans Parish), 219 Loyola Avenue, New Orleans; New Orleans Public Library (Algiers Point Branch), 725 Pelican Avenue, New Orleans; Ouachita Parish Library, 1800 Stubbs Avenue, Monroe; Rapides Parish Library, 411 Washington Street, Alexandria; Vernon Parish Library, 1401 Nolan Trace, Leesville; and Shreve Memorial Library (Caddo Parish), 424 Texas Street (71101), Shreveport, Louisiana. The DEIS, as well as additional information concerning the EIS process, may be reviewed at *http://notes.tetratech-ffx.com/PolkEIS.nsf.*

Dated: July 24, 2003.

Raymond J. Fatz,

Deputy Assistant Secretary of the Army, (Environment, Safety and Occupational Health), OASA(I&E).

[FR Doc. 03–19477 Filed 7–30–03; 8:45 am]

BILLING CODE 3710–08–M

DEPARTMENT OF DEFENSE

Department of the Navy

Notice of Availability of Government-Owned Invention; Available for Licensing

AGENCY: Department of the Navy, DOD.

ACTION: Notice.

SUMMARY: The following invention is assigned to the U.S. Government as represented by the Secretary of the Navy and is made available for licensing by the Department of the Navy. U.S. Patent Application Serial Number 10/283,352 entitled ''Nitrate-Hydrogen Peroxide Chemical Adducts and Use Thereof.''

ADDRESSES: Requests for copies of the Patent Application cited should be directed to the Indian Head Division, Naval Surface Warfare Center, Code O5T, 101 Strauss Avenue, Indian Head, MD 20640–5035.

FOR FURTHER INFORMATION CONTACT: Dr. J. Scott Deiter, Head, Technology Transfer Office, Naval Surface Warfare Center Indian Head Division, Code 05T, 101 Strauss Avenue, Indian Head, MD 20640–5035, telephone (301) 744–6111.

Dated: July 21, 2003.

E.F. McDonnell,

Major, U.S. Marine Corps, Federal Register Liaison Officer.

[FR Doc. 03–19499 Filed 7–30–03; 8:45 am]

BILLING CODE 3810–FF–P

DEPARTMENT OF ENERGY

Federal Energy Regulatory Commission

[Docket No. IC03–716A–001, FERC–716A]

Commission Information Collection Activities, Proposed Collection; Comment Request; Submitted for OMB Review

July 23, 2003.

AGENCY: Federal Energy Regulatory Commission, DOE.

ACTION: Notice.

SUMMARY: In compliance with the requirements of Section 3507 of the Paperwork Reduction Act of 1995, 44 U.S.C. 3507, the Federal Energy Regulatory Commission (Commission) has submitted the information collection described below to the Office of Management and Budget (OMB) for review and extension of the current expiration date. Any interested person may file comments directly with OMB and should address a copy of those comments to the Commission as explained below. The Commission received no comments in response to an earlier **Federal Register** notice of May 16, 2003 (68 FR 26592–93) and has made this notation in its submission to OMB.

DATES: Comments on the collection of information are due by August 20, 2003.

ADDRESSES: Address comments on the collection of information to the Office of Management and Budget, Office of Information and Regulatory Affairs, Attention: Federal Energy Regulatory Commission Desk Officer. The Desk Officer may be reached by fax at 202–395–7285 or by e-mail at *pamelabeverly.oira submission@omb.eop.gov.*

A copy of the comments should also be sent to the Federal Energy Regulatory Commission, Office of the Executive Director, ED–30, Attention: Michael Miller, 888 First Street NE., Washington, DC 20426. Comments may be filed either in paper format or electronically. Those persons filing electronically do not need to make a paper filing. For paper filings, such comments should be submitted to the Office of the Secretary, Federal Energy Regulatory Commission, 888 First Street, NE., Washington, DC 20426 and should refer to Docket No. IC03–716A–001.

Documents filed electronically via the Internet must be prepared in WordPerfect, MS Word, Portable Document Format, or ASCII format. To file the document, access the Commission's Web site at *http://*

www.ferc.gov and click on ''Make an E-filing,'' and then follow the instructions for each screen. First time users will have to establish a user name and password. The Commission will send an automatic acknowledgment to the sender's E-mail address upon receipt of comments. User assistance for electronic filings is available at 202–502–8258 or by e-mail to *efiling@ferc.gov*. Comments should not be submitted to the e-mail address.

All comments may be viewed, printed or downloaded remotely via the Internet through FERC's homepage using the FERRIS link. For user assistance contact *FERCOnlineSupport@ferc.gov* or toll-free at (866) 208–3676 or for TTY, contact (202) 502–8659 or the Public Reference at (202)–8371, or by e-mail to *public.reference.room@ferc.gov*.

FOR FURTHER INFORMATION CONTACT: Michael Miller may be reached by telephone at (202)502–8415, by fax at (202) 273–0873, and by e-mail at *michael.miller@ferc.gov.*

SUPPLEMENTARY INFORMATION:

Description

The information collection submitted for OMB review contains the following:

1. *Collection of Information:* FERC–716A ''Application for Transmission Services under section 211 of the Federal Power Act.''

2. *Sponsor:* Federal Energy Regulatory Commission.

3. *Control No.* 1902–00168.

The Commission is now requesting that OMB approve a three-year extension of the expiration date, with no changes to the existing collection. The information filed with the Commission is mandatory. Requests for confidential treatment of the information are provided for under § 388.112 of the Commission's regulations.

4. *Necessity of the Collection of Information:* Submission of the information is necessary to enable the Commission to carry out its responsibilities in implementing the statutory provisions of the Federal Power Act (FPA), 16 U.S.C. 824j as amended and added by the Energy policy Act of 1992 (Pub. L. 102–468). The Commission uses the information collected to ensure that the requirements set forth in Section 211(a) of the FPA have been met, *i.e.*, that a request for transmission service has been made by the applicant to the transmitting utility at least 60 days prior to filing the application with the Commission and that all affected parties have been notified. Specifically, section 211(a) as provided for by the Energy Policy Act of 1992, authorizes the Commission to issue an order directing transmission service only after a person applying for the order has requested the transmission service from the transmitting utility at least 60 days prior to applying to the Commission. Section 211 allows any electric utility, Federal power marketing agency or any other person generating electric energy for sale or resale to apply for an order requiring a transmitting utility to provide transmission services to the applicant.

The applicant is required to provide a form of notice suitable for publication in the **Federal Register**, and notify the affected parties. The Commission uses the information to carry out its responsibilities under part II of the Federal Power Act. The Commission implements these filing requirements in the Code of Federal Regulations (CFR) under 18 CFR part 36.

5. *Respondent Description:* The respondent universe currently comprises approximately 10 public utilities, federal power marketing agencies or any other person generating electric energy for sale or resale to apply for an order requiring a transmitting utility to provide transmission services to the applicant.

6. *Estimated Burden:* 25 total hours, 10 respondents (average), 1 response per respondent, 2.5 hours per response (average).

7. *Estimated Cost Burden to respondents:* 25 hours/2080 hours per years × $117,041 per year = $1,407. The cost per respondent is equal to $141.00.

Statutory Authority: Sections 211(a), 212, 213(a) of the Federal Power Act, 16 U.S.C. 824j–l, and sections 721–723 of the Energy Policy Act of 1992. (PL. 102–486).

Magalie R. Salas,

Secretary.

[FR Doc. 03–19385 Filed 7–30–03; 8:45 am]

BILLING CODE 6717–01–P

DEPARTMENT OF ENERGY

Federal Energy Regulatory Commission

[Docket No. CP03–335–000]

Calpine Corporation and Otay Mesa Generating Company, LLC; Notice of Application

July 24, 2003.

Take notice that on July 15, 2003, Calpine Corporation (Calpine) and Otay Mesa Generating Company, LLC (Otay Mesa) (the Applicants), both at 50 West San Fernando Street, San Jose, California 95113, filed, pursuant to Section 3 of the Natural Gas Act (NGA) and part 153 of the Commission's regulations, an application in Docket No. CP03–335–000, to amend the Section 3 authorization and Presidential Permit issued to Otay Mesa in Docket No. CP01–145–000 to insert Calpine's name in lieu of Otay Mesa, as more fully described in the application. This filing is available for review at the Commission in the Public Reference Room or may be viewed on the Commission's Web site at *http://www.ferc.gov* using the ''FERRIS'' link. Enter the docket number excluding the last three digits in the docket number field to access the document. For assistance, please contact FERC Online Support at *FERCOnlineSupport@ferc.gov* or toll-free at (866) 208–3676, or for TTY, contact (202) 502–8659.

The Applicants state that Otay Mesa's border crossing facilities authorized in Docket No. CP01–145–000 are located near San Diego, California at the United States/ Mexico border and are intended to import natural gas to fuel Otay Mesa's new power generation plant located 1.5 miles north of the border crossing facilities. Applicants explain that Otay Mesa, a wholly-owned subsidiary of Calpine, will be merged with and into Calpine as part of an internal restructuring of Calpine assets necessary to secure additional financing. Applicants further state that Calpine will be the successor to Otay Mesa's interest in the border crossing facilities with no change in the terms and conditions of the Section 3 authorization and Presidential Permit.

Applicants also state that they did not conclusively determine that the merger would occur until July 9, 2003, and that the merger was expected to occur on or about July 16, 2003. Section 3 authorization and Presidential Permit are not transferrable, thus, Applicants request that the Commission waive the prior authorization requirements because the merger and the collateral thus provided for a needed bond sale is important to maintaining the financial strength of Calpine and constitute extraordinary circumstances which justify the requested waiver.

Any questions regarding this application should be directed to Daniel M. Adamson, Davis Wright Tremaine LLP, 1500 K Street, NW., Suite 450, Washington, DC 20005, or call (202) 508–6640 or FAX (202) 508–6699.

There are two ways to become involved in the Commission's review of this project. First, any person wishing to obtain legal status by becoming a party to the proceedings for this project should, on or before the comment date stated below, file with the Federal

Energy Regulatory Commission, 888 First Street, NE., Washington, DC 20426, a motion to intervene in accordance with the requirements of the Commission's Rules of Practice and Procedure (18 CFR 385.214 or 385.211) and the Regulations under the NGA (18 CFR 157.10). A person obtaining party status will be placed on the service list maintained by the Secretary of the Commission and will receive copies of all documents filed by the applicant and by all other parties. A party must submit 14 copies of filings made with the Commission and must mail a copy to the applicant and to every other party in the proceeding. Only parties to the proceeding can ask for court review of Commission orders in the proceeding.

However, a person does not have to intervene in order to have comments considered. The second way to participate is by filing with the Secretary of the Commission, as soon as possible, an original and two copies of comments in support of or in opposition to this project. The Commission will consider these comments in determining the appropriate action to be taken, but the filing of a comment alone will not serve to make the filer a party to the proceeding. The Commission's rules require that persons filing comments in opposition to the project provide copies of their protests only to the party or parties directly involved in the protest.

Persons who wish to comment only on the environmental review of this project should submit an original and two copies of their comments to the Secretary of the Commission. Environmental commenters will be placed on the Commission's environmental mailing list, will receive copies of the environmental documents, and will be notified of meetings associated with the Commission's environmental review process. Environmental commenters will not be required to serve copies of filed documents on all other parties. However, the non-party commenters will not receive copies of all documents filed by other parties or issued by the Commission (except for the mailing of environmental documents issued by the Commission) and will not have the right to seek court review of the Commission's final order.

The Commission may issue a preliminary determination on non-environmental issues prior to the completion of its review of the environmental aspects of the project.

This preliminary determination typically considers such issues as the need for the project and its economic effect on existing customers of the applicant, on other pipelines in the area, and on landowners and communities. For example, the Commission considers the extent to which the applicant may need to exercise eminent domain to obtain rights-of-way for the proposed project and balances that against the non-environmental benefits to be provided by the project. Therefore, if a person has comments on community and landowner impacts from this proposal, it is important either to file comments or to intervene as early in the process as possible.

Protests and interventions may be filed electronically via the internet in lieu of paper; *see* 18 CFR 385.2001(a)(1)(iii) and the instructions on the Commission's Web site under the ''e-Filing'' link. The Commission strongly encourages electronic filings.

Comment Date: August 14, 2003.

Magalie R. Salas,

Secretary.

[FR Doc. 03–19379 Filed 7–30–03; 8:45 am]

BILLING CODE 6717–01–P

DEPARTMENT OF ENERGY

Federal Energy Regulatory Commission

[Docket Nos. RP02–562–005]

CenterPoint Energy-Mississippi River Transmission Corporation; Notice of Compliance Filing

July 24, 2003.

Take notice that on July 18, 2003, CenterPoint Energy-Mississippi River Transmission Corporation (MRT) tendered for filing as part of its FERC Gas Tariff, Third Revised Volume No. 1, the following tariff sheets to be effective August 1, 2003:

Forty-Eighth Revised Sheet No. 5
Forty-Eighth Revised Sheet No. 6
Forty-Fifth Revised Sheet No. 7

MRT states that the purpose of this filing is to comply with the Commission's order issued July 11, 2003 in Docket Nos. RP02–562–003 and RP02–562–004.

Any person desiring to protest said filing should file a protest with the Federal Energy Regulatory Commission, 888 First Street, NE., Washington, DC 20426, in accordance with § 385.211 of the Commission's Rules and Regulations. All such protests must be filed in accordance with § 154.210 of the Commission's Regulations. Protests will be considered by the Commission in determining the appropriate action to be taken, but will not serve to make protestants parties to the proceedings. This filing is available for review at the Commission in the Public Reference Room or may be viewed on the Commission's Web site at *http://www.ferc.gov* using the ''FERRIS'' link. Enter the docket number excluding the last three digits in the docket number field to access the document. For assistance, please contact FERC Online Support at *FERCOnlineSupport@ferc.gov* or toll-free at (866) 208–3676, or TTY, contact (202) 502–8659. The Commission strongly encourages electronic filings. *See* 18 CFR 385.2001(a)(1)(iii) and the instructions on the Commission's Web site under the ''e-Filing'' link.

Protest Date: July 30, 2003.

Magalie R. Salas,

Secretary.

[FR Doc. 03–19395 Filed 7–30–03; 8:45 am]

BILLING CODE 6717–01–P

DEPARTMENT OF ENERGY

Federal Energy Regulatory Commission

[Docket No. CP03–336–000]

CenterPoint Energy Gas Transmission Company; Notice of Request Under Blanket Authorization

July 24, 2003.

Take notice that on July 17, 2003, CenterPoint Energy Gas Transmission Company (CEGT), 1111 Louisiana Street, Houston, Texas 77079 filed in Docket No. CP03–336–000 a request pursuant to §§ 157.205 and 157.216 of the Federal Energy Regulatory Commission's regulations (18 CFR 157.205 and 157.216) under the Natural Gas Act (NGA) for authorization to abandon by sale and transfer certain facilities in Coal and Pontotoc Counties in Oklahoma, under CEGT's blanket certificate issued in Docket Nos. CP82–384–000 and CP82–384–001, pursuant to section 7 of the NGA, all as more fully set forth in the application which is on file with the Commission and open to public inspection. This filing is available for review at the Commission or may be viewed on the Commission's Web site at *http://www.ferc.gov* using the ''FERRIS'' link. Enter the docket number excluding the last three digits in the docket number field to access the document. For assistance, please contact FERC Online Support at*FERCOnlineSupport@ferc.gov* or toll-free at (866) 208–3676, or for TTY, contact (202) 502–8659.

CEGT states that it intends to abandon, by sale and transfer at net book value to CenterPoint Energy Arkla (Arkla), Lines 635–14 and 634–16.

CEGT asserts that Line 635–14 consists of 10,266 feet of 2-inch diameter (dia.) plastic pipe located in Coal County, Oklahoma and Line 634–16 consists of 373 feet of 1.3-inch dia. plastic pipe located in Pontotoc County, Oklahoma. CEGT states that Arkla will incorporate these lines into Arkla's existing low pressure distribution system in Oklahoma.

CEGT states that facilities were sold to Arkla at net book value at the time of sale, which was $18,571.18 on December 31, 2002.

Any questions concerning this request may be directed to: Lawrence O. Thomas, Director, Rate and Regulatory, CenterPoint Energy Gas Transmission Company, PO Box 21734, Shreveport, Louisiana 71151; Tel. (318) 429–2804, Fax (318) 429–3133.

Any person or the Commission's staff may, within 45 days after issuance of the instant notice by the Commission, file pursuant to Rule 214 of the Commission's Procedural Rules (18 CFR 385.214) a motion to intervene or notice of intervention and pursuant to Section 157.205 of the regulations under the NGA (18 CFR 157.205), a protest to the request. If no protest is filed within the time allowed therefor, the proposed activity shall be deemed to be authorized effective the day after the time allowed for filing a protest. If a protest is filed and not withdrawn within 30 days after the allowed time for filing a protest, the instant request shall be treated as an application for authorization pursuant to section 7 of the NGA.

Comments, protests and interventions may be filed electronically via the Internet in lieu of paper. *See* 18 CFR 385.2001(a)(1)(iii) and the instructions on the Commission's Web site under the ''e-Filing'' link. The Commission strongly encourages electronic filings.

Magalie R. Salas,

Secretary.

[FR Doc. 03–19380 Filed 7–30–03; 8:45 am]

BILLING CODE 6717–01–P

DEPARTMENT OF ENERGY

Federal Energy Regulatory Commission

[Docket Nos. RP00–326–004, RP00–605–004, and RP02–39–006]

Columbia Gulf Transmission Company; Notice of Compliance Filing

July 24, 2003.

Take notice that on July 18, 2003, Columbia Gulf Transmission Company (Columbia Gulf) tendered for filing as part of its FERC Gas Tariff, Second Revised Volume No. 1, the tariff sheets listed on Appendix A to the filing, bearing a proposed effective date of July 1, 2003, and tariff sheets listed on Appendix B to the filing, bearing a proposed effective date of April 1, 2004.

Columbia Gulf states it is making this filing in compliance with the Commission's July 3, 2003 Order (July 3 Order) in the above-referenced dockets. Columbia Gulf explains that in the July 3 Order, the Commission held that Columbia Gulf's October 28, 2002 filing to comply with the Commission's September 26, 2002 order, was generally in compliance. The September 26 Order addressed Columbia Gulf's requirement to comply with Order Nos. 637, 587–G, and 587–L. Columbia Gulf further explains that the July 3 Order also required that Columbia Gulf make certain compliance changes by filing actual tariff sheets within 15 days of the date of issuance of the July 3 Order. The Commission directed Columbia Gulf that those tariff sheets should have a July 1, 2003 effective date. In addition, Columbia Gulf explains, the Commission identified other compliance changes that were to have an effective date of April 1, 2004. Columbia Gulf states that these revised tariff sheets reflect the changes required by the Commission in the July 3 Order.

Columbia Gulf states that copies of its filing have been mailed to all firm customers, interruptible customers and affected state commissions.

Any person desiring to protest said filing should file a protest with the Federal Energy Regulatory Commission, 888 First Street, NE., Washington, DC 20426, in accordance with § 385.211 of the Commission's Rules and Regulations. All such protests must be filed in accordance with § 154.210 of the Commission's Regulations. Protests will be considered by the Commission in determining the appropriate action to be taken, but will not serve to make protestants parties to the proceedings. This filing is available for review at the Commission in the Public Reference Room or may be viewed on the Commission's Web site at *http://www.ferc.gov* using the ''FERRIS'' link. Enter the docket number excluding the last three digits in the docket number field to access the document. For assistance, please contact FERC Online Support at *FERCOnlineSupport@ferc.gov* or toll-free at (866) 208–3676, or TTY, contact (202) 502–8659. The Commission strongly encourages electronic filings. *See* 18 CFR 385.2001(a)(1)(iii) and the instructions on the Commission's Web site under the ''e-Filing'' link.

Protest Date: July 30, 2003.

Magalie R. Salas,

Secretary.

[FR Doc. 03–19393 Filed 7–30–03; 8:45 am]

BILLING CODE 6717–01–P

DEPARTMENT OF ENERGY

Federal Energy Regulatory Commission

[Docket Nos. CP01–76–006, CP01–77–006, RP01–217–003, and CP01–156–003]

Dominion Cove Point LNG, LP; Notice of Compliance Filing

July 24, 2003.

Take notice that on July 16, 2003, Dominion Cove Point LNG, LP. (Cove Point) tendered for filing as part of its FERC Gas Tariff, Original Volume No. 1, the following tariff sheets and requests an effective date of August 16, 2003:

Third Revised Sheet No.229
First Revised Sheet No.230
First Revised Sheet No. 231
First Revised Sheet No. 232
Second Revised Sheet No. 233
First Revised Sheet No. 234
First Revised sheet No. 235
First Revised Sheet No. 236
First Revised Sheet No. 237

Cove Point states that the purpose of the filing is to change the interchangeability indices and adjustment gas as recommended by the TIAX study that was required by the Amendment to the January 2001 Settlement filed in Docket No. CP01–76 and approved by the Commission on February 27, 2003.

Any person desiring to protest said filing should file a protest with the Federal Energy Regulatory Commission, 888 First Street, NE., Washington, DC 20426, in accordance with § 385.211 of the Commission's Rules and Regulations. All such protests must be filed in accordance with § 154.210 of the Commission's Regulations. Protests will be considered by the Commission in determining the appropriate action to be taken, but will not serve to make protestants parties to the proceedings. This filing is available for review at the Commission in the Public Reference Room or may be viewed on the Commission's Web site at *http://www.ferc.gov* using the ''FERRIS'' link. Enter the docket number excluding the last three digits in the docket number field to access the document. For assistance, please contact FERC Online Support at *FERCOnlineSupport@ferc.gov* or toll-free at (866) 208–3676, or TTY, contact (202) 502–8659. The Commission

strongly encourages electronic filings. *See* 18 CFR 385.2001(a)(1)(iii) and the instructions on the Commission's Web site under the ''e-Filing'' link.

Protest Date: July 28, 2003.

Magalie R. Salas,

Secretary.

[FR Doc. 03–19377 Filed 7–30–03; 8:45 am]

BILLING CODE 6717–01–P

DEPARTMENT OF ENERGY

Federal Energy Regulatory Commission

[Docket No. RP03–550–000]

Dominion Transmission, Inc.; Notice of Tariff Filing

July 24, 2003.

Take notice that on July 18, 2003, Dominion Transmission, Inc. (DTI) tendered for filing as part of its FERC Gas Tariff, Third Revised Volume No. 1, First Revised Sheet No. 1019, with an effective date of August 17, 2003.

DTI states that the purpose of its filing is to revise one element of the gas quality specifications applicable to all receipts of natural gas by DTI by increasing the maximum acceptable level of nitrogen from three percent to four percent.

DTI explains that the change in quality specifications is motivated by the impending reactivation of the LNG import terminal of Dominion Cove Point LNG, L.P., which is interconnected with DTI.

DTI states that the proposed change will facilitate the movement of gas across pipelines in response to market need, promote access to a new supply of natural gas, and eliminate an inconsistency between DTI's quality specifications and those of other pipelines in the region.

Any person desiring to be heard or to protest said filing should file a motion to intervene or a protest with the Federal Energy Regulatory Commission, 888 First Street, NE., Washington, DC 20426, in accordance with § 385.214 or 385.211 of the Commission's Rules and Regulations. All such motions or protests must be filed in accordance with § 154.210 of the Commission's Regulations. Protests will be considered by the Commission in determining the appropriate action to be taken, but will not serve to make protestants parties to the proceedings. Any person wishing to become a party must file a motion to intervene. This filing is available for review at the Commission in the Public Reference Room or may be viewed on the Commission's Web site at *http://www.ferc.gov* using the ''FERRIS'' link. Enter the docket number excluding the last three digits in the docket number field to access the document. For assistance, please contact FERC Online Support at *FERCOnlineSupport@ferc.gov* or toll-free at (866) 208–3676, or TTY, contact (202) 502–8659. The Commission strongly encourages electronic filings. *See* 18 CFR 385.2001(a)(1)(iii) and the instructions on the Commission's Web site under the ''e-Filing'' link.

Comment Date: July 30, 2003.

Magalie R. Salas,

Secretary.

[FR Doc. 03–19396 Filed 7–30–03; 8:45 am]

BILLING CODE 6717–01–P

DEPARTMENT OF ENERGY

Federal Energy Regulatory Commission

[Docket No. RP02–361–011]

Gulfstream Natural Gas System, L.L.C.; Notice of Compliance Filing

July 24, 2003.

Take notice that on July 21, 2003, Gulfstream Natural Gas System, L.L.C. (Gulfstream) tendered for filing as part of its FERC Gas Tariff, Original Volume No. 1, the following tariff sheets:

Fourth Revised Sheet No. 8
Original Sheet No. 8.01
Original Sheet No. 8I
Original Sheet No. 8J

Fourth Revised Sheet No. 8 and Original Sheet No. 8.01 reflect an effective date of December 1, 2002. Original Sheet Nos. 8I and 8J reflect an effective date of July 16, 2003.

Gulfstream states that it is making this filing in compliance with the Commission's June 9, 2003 order, 103 FERC § 61,312. Gulfstream states that the tariff sheets filed herewith implement three of the negotiated rates approved by the June 9, 2003 order.

Gulfstream states that copies of its filing have been mailed to all affected customers and interested state commissions, as well as parties on the Official Service List compiled by the Secretary in this proceeding.

Any person desiring to protest said filing should file a protest with the Federal Energy Regulatory Commission, 888 First Street, NE., Washington, DC 20426, in accordance with § 385.211 of the Commission's Rules and Regulations. All such protests must be filed in accordance with § 154.210 of the Commission's Regulations. Protests will be considered by the Commission in determining the appropriate action to be taken, but will not serve to make protestants parties to the proceedings. This filing is available for review at the Commission in the Public Reference Room or may be viewed on the Commission's Web site at *http://www.ferc.gov* using the ''FERRIS'' link. Enter the docket number excluding the last three digits in the docket number field to access the document. For assistance, please contact FERC Online Support at *FERCOnlineSupport@ferc.gov* or toll-free at (866) 208–3676, or TTY, contact (202) 502–8659. The Commission strongly encourages electronic filings. *See* 18 CFR 385.2001(a)(1)(iii) and the instructions on the Commission's Web site under the ''e-Filing'' link.

Protest Date: August 4, 2003.

Magalie R. Salas,

Secretary.

[FR Doc. 03–19394 Filed 7–30–03; 8:45 am]

BILLING CODE 6717–01–P

DEPARTMENT OF ENERGY

Federal Energy Regulatory Commission

[Docket No. EL03–215–000]

North Hartland, LLC, Complainant, v. Central Vermont Public Service Corp., Respondent; Notice of Complaint

July 24, 2003.

Take notice that on July 22, 2003, the North Hartland, LLC (NHL) tendered for filing with the Federal Energy Regulatory Commission (Commission), pursuant to Rule 206 of the Commission's Rules of practice and procedure, 18 CFR 385.206, a Complaint Requesting Fast Track Processing. NHL filed the Complaint against Central Vermont Public Service Corporation (CV) and states that CV has refused to comply with its obligations under the Public Utility Regulatory Policies Act (PURPA). Specifically, it alleges CV has refused to produce avoided costs data and CV has refused to purchase Qualifying Facility (QF) offered electricity from a QF known as the North Hartland Hydroelectric Project, P–2816.

Any person desiring to be heard or to protest this filing should file with the Federal Energy Regulatory Commission, 888 First Street, NE., Washington, DC 20426, in accordance with Rules 211 and 214 of the Commission's Rules of Practice and Procedure (18 CFR 385.211 and 385.214). Protests will be considered by the Commission in determining the appropriate action to be

taken, but will not serve to make protestants parties to the proceeding. Any person wishing to become a party must file a motion to intervene. The answer to the complaint and all comments, interventions or protests must be filed on or before the comment date below. This filing is available for review at the Commission in the Public Reference Room or may be viewed on the Commission's Web site at *http://www.ferc.gov* using the ''FERRIS'' link. Enter the docket number excluding the last three digits in the docket number field to access the document. For assistance, please contact FERC Online Support at *FERCOnlineSupport@ferc.gov* or toll-free at (866) 208–3676, or for TTY, contact (202) 502–8659. The answer to the complaint, comments, protests and interventions may be filed electronically via the Internet in lieu of paper; *see* 18 CFR 385.2001(a)(1)(iii) and the instructions on the Commission's Web site under the ''e-Filing'' link. The Commission strongly encourages electronic filings.

Comment Date: August 11, 2003.

Magalie R. Salas,

Secretary.

[FR Doc. 03–19382 Filed 7–30–03; 8:45 am]

BILLING CODE 6717–01–P

DEPARTMENT OF ENERGY

Federal Energy Regulatory Commission

[Docket No. EL03–216–000]

Northeast Utilities Service Company and Select Energy, Inc., Complainant, v. ISO New England Inc. and New England Power Pool, Respondent; Notice of Complaint

July 24, 2003.

Take notice that on July 23, 2003, Northeast Utilities Service Company, on behalf of the Northeast Utilities Operating Company (NUSCO) and Select Energy, Inc. (Select Energy) tendered for filing a complaint against ISO New England Inc. (ISO–NE) and New England Power Pool (NEPOOL) regarding the collection and disbursement of the transmission loss component of the locational marginal prices under NEPOOL's standard market design alleging violations of the Federal Power Act and the Commission's regulations.

NUSCO and Select Energy state that copies of this filing have been served on ISO–NE, NEPOOL, and affected state regulatory commissions.

Any person desiring to be heard or to protest this filing should file with the Federal Energy Regulatory Commission, 888 First Street, NE., Washington, DC 20426, in accordance with Rules 211 and 214 of the Commission's Rules of Practice and Procedure (18 CFR 385.211 and 385.214). Protests will be considered by the Commission in determining the appropriate action to be taken, but will not serve to make protestants parties to the proceeding. Any person wishing to become a party must file a motion to intervene. The answer to the complaint and all comments, interventions or protests must be filed on or before the comment date below. This filing is available for review at the Commission in the Public Reference Room or may be viewed on the Commission's Web site at *http://www.ferc.gov* using the ''FERRIS'' link. Enter the docket number excluding the last three digits in the docket number field to access the document. For assistance, please contact FERC Online Support at *FERCOnlineSupport@ferc.gov* or toll-free at (866) 208–3676, or for TTY, contact (202) 502–8659. The answer to the complaint, comments, protests and interventions may be filed electronically via the Internet in lieu of paper; *see* 18 CFR 385.2001(a)(1)(iii) and the instructions on the Commission's Web site under the ''e-Filing'' link. The Commission strongly encourages electronic filings.

Comment Date: August 12, 2003.

Magalie R. Salas,

Secretary.

[FR Doc. 03–19383 Filed 7–30–03; 8:45 am]

BILLING CODE 6717–01–P

DEPARTMENT OF ENERGY

Federal Energy Regulatory Commission

[Docket No. CP02–4–005]

Northwest Pipeline Corporation; Notice of Amendment

July 24, 2003.

Take notice that on July 14, 2003, Northwest Pipeline Corporation (Northwest), 295 Chipeta Way, Salt Lake City, Utah, 84158, filed in Docket No. CP02–4–005, an application, pursuant to section 7(c) of the Natural Gas Act and part 157 of the Federal Energy Regulatory Commission's regulations to amend the certificate of public convenience and necessity issued June 27, 2002, in Docket Nos. CP02–4–000 and –001, as amended May 7, 2003, in Docket No. CP02–002, for Northwest's Evergreen Expansion project. This application is on file with the Commission and open to public inspection. This filing is available for review at the Commission in the Public Reference Room or may be viewed on the Commission's Web site at *http://www.ferc.gov* using the ''FERRIS'' link. Enter the docket number excluding the last three digits in the docket number field to access the document. For assistance, please contact FERC Online Support at *FERCOnlineSupport@ferc.gov* or toll-free at (866) 208–3676, or for TTY, contact (202) 502–8659.

By this application, Northwest requests the Commission to approve the following changes to the previously certificated scope of work for the Evergreen Expansion project: (1) The elimination two of the three originally certificated sound walls at the Sumas Compressor Station in Whatcom County, Washington; (2) the elimination of the originally certificated installation of smaller replacement pistons on one of the two Clark TCV–12 reciprocating compressor units at the Sumas Compressor Station ''B'' plant; (3) the installation of a check valve and control system modifications to partially automate the operation of the two Clark TCV–12 units at the Sumas Compressor Station ''B'' plant in series mode; and (4) the elimination of the originally certificated valve assemblies for potential future tie-ins of the new Auburn and Covington loop pipelines, located in Pierce and King Counties, Washington to the South Seattle and North Tacoma Laterals.

Northwest states that it has installed one sound wall and has determined that noise levels for the Sumas Compressor Station will comply with applicable standards without installation of the other two certificated sound walls. Northwest also states that it has installed smaller pistons in one compressor and has determined that foregoing such installation in the other compressor will maximize operational flexibility. Additionally, Northwest states that the installation of facilities to allow the compressor units to run in series mode will also enhance operational flexibility. Further, Northwest states that it has determined that, since the South Seattle and North Tacoma laterals are already connected to Northwest's mainline facilities, the certificated tie-in facilities are not required. Finally, Northwest states that the proposed modifications will not alter the certificated capacity for the Evergreen Expansion Project, and that elimination of the installation of the potential tie-in facilities will eliminate

approximately $100,000 of costs that otherwise would be rolled-in, while, for the Sumas Compressor Station, the costs of proposed new control facilities will be offset by the cost reductions for the proposed elimination of certificated facilities.

Northwest requests that the Commission issue the amended certificate order by September 15, 2003, so the proposed modifications for the Sumas Compressor Station can be completed by October 1, 2003.

Any questions concerning this application may be directed to Gary K. Kotter, Manager, Certificates and Tariffs-3C1, Northwest Pipeline Corporation, PO Box 58900, Salt Lake City, Utah 841580900, at (801) 584–7117 or fax (801) 584–7764.

There are two ways to become involved in the Commission's review of this project. First, any person wishing to obtain legal status by becoming a party to the proceedings for this project should, on or before the comment date stated below, file with the Federal Energy Regulatory Commission, 888 First Street, NE., Washington, DC 20426, a motion to intervene in accordance with the requirements of the Commission's Rules of Practice and Procedure (18 CFR 385.214 or 385.211) and the Regulations under the NGA (18 CFR 157.10). A person obtaining party status will be placed on the service list maintained by the Secretary of the Commission and will receive copies of all documents filed by the applicant and by all other parties. A party must submit 14 copies of filings made with the Commission and must mail a copy to the applicant and to every other party in the proceeding. Only parties to the proceeding can ask for court review of Commission orders in the proceeding.

However, a person does not have to intervene in order to have comments considered. The second way to participate is by filing with the Secretary of the Commission, as soon as possible, an original and two copies of comments in support of or in opposition to this project. The Commission will consider these comments in determining the appropriate action to be taken, but the filing of a comment alone will not serve to make the filer a party to the proceeding. The Commission's rules require that persons filing comments in opposition to the project provide copies of their protests only to the party or parties directly involved in the protest.

Persons who wish to comment only on the environmental review of this project should submit an original and two copies of their comments to the Secretary of the Commission. Environmental commenters will be placed on the Commission's environmental mailing list, will receive copies of the environmental documents, and will be notified of meetings associated with the Commission's environmental review process. Environmental commenters will not be required to serve copies of filed documents on all other parties. However, the non-party commenters will not receive copies of all documents filed by other parties or issued by the Commission (except for the mailing of environmental documents issued by the Commission) and will not have the right to seek court review of the Commission's final order.

The Commission may issue a preliminary determination on non-environmental issues prior to the completion of its review of the environmental aspects of the project. This preliminary determination typically considers such issues as the need for the project and its economic effect on existing customers of the applicant, on other pipelines in the area, and on landowners and communities. For example, the Commission considers the extent to which the applicant may need to exercise eminent domain to obtain rights-of-way for the proposed project and balances that against the non-environmental benefits to be provided by the project. Therefore, if a person has comments on community and landowner impacts from this proposal, it is important either to file comments or to intervene as early in the process as possible.

Protests and interventions may be filed electronically via the internet in lieu of paper; *see* 18 CFR 385.2001(a)(1)(iii) and the instructions on the Commission's Web site under the ''e-Filing'' link. The Commission strongly encourages electronic filings.

Comment Date: August 8, 2003.

Magalie R. Salas,

Secretary.

[FR Doc. 03–19378 Filed 7–30–03; 8:45 am]

BILLING CODE 6717–01–P

DEPARTMENT OF ENERGY

Federal Energy Regulatory Commission

[Docket No. GT95–11–004]

Southern Star Central Gas Pipeline, Inc.; Notice of Refund Report

July 24, 2003.

Take notice that on June 5, 2003, Southern Star Central Gas Pipeline, Inc. (Southern Star), formerly Williams Gas Pipelines Central, Inc., tendered for filing a report of activities regarding collection of Kansas Ad Valorem taxes in Southern Star's Docket No. GT95–11.

Southern Star states that this filing is being made in compliance with a Commission order directing that the pipelines file reports concerning their activities to collect and flow through refunds of the taxes at issue. Southern Star states that this filing reflects amounts still due to Southern Star in Docket No. GT95–11 as a result of the Kansas Ad Valorem tax refunds ordered by the Commission in 1993 and related to tax payments originally made in 1988 and after.

Southern Star states that a copy of its filing was served on all parties included on the official service list maintained by the Secretary in this proceeding.

Any person desiring to protest said filing should file a protest with the Federal Energy Regulatory Commission, 888 First Street, NE., Washington, DC 20426, in accordance with § 385.211 of the Commission's Rules and Regulations. All such protests must be filed on or before the protest date as shown below. Protests will be considered by the Commission in determining the appropriate action to be taken, but will not serve to make protestants parties to the proceedings. This filing is available for review at the Commission in the Public Reference Room or may be viewed on the Commission's Web site at *http://www.ferc.gov* using the ''FERRIS'' link. Enter the docket number excluding the last three digits in the docket number field to access the document.

Comments, protests and interventions may be filed electronically via the Internet in lieu of paper. For assistance, please contact FERC Online Support at *FERCOnlineSupport@ferc.gov* or toll-free at (866) 208–3676, or TTY, contact (202) 502–8659. The Commission strongly encourages electronic filings. *See* 18 CFR 385.2001(a)(1)(iii) and the instructions on the Commission's Web site under the ''e-Filing'' link.

Protest Date: July 31, 2003.

Magalie R. Salas,

Secretary.

[FR Doc. 03–19384 Filed 7–30–03; 8:45 am]

BILLING CODE 6717–01–P

DEPARTMENT OF ENERGY

Federal Energy Regulatory Commission

[Docket No. RP98–52–047]

Southern Star Central Gas Pipeline, Inc.; Notice of Refund Report

July 24, 2003.

Take notice that on June 5, 2003, Southern Star Central Gas Pipeline, Inc. (Southern Star), formerly Williams Gas Pipelines Central, Inc., tendered for filing its report of activities regarding collection of Kansas Ad Valorem taxes.

Southern Star states that this filing is being made in compliance with Commission order issued September 10, 1997, in Docket Nos. RP97–369–000, et.al. Southern Star states that the September 10 order requires first settlers to make refunds for the period October 3, 1983 through June 28, 1988. Southern Star further states that the Commission directed that pipelines file reports concerning their activities to collect and flow through refunds of the taxes at issue.

Southern Star states that a copy of its filing was served on all parties included on the official service list maintained by the Secretary in this proceeding.

Any person desiring to protest said filing should file a protest with the Federal Energy Regulatory Commission, 888 First Street, NE., Washington, DC 20426, in accordance with § 385.211 of the Commission's Rules and Regulations. All such protests must be filed on or before the protest date as shown below. Protests will be considered by the Commission in determining the appropriate action to be taken, but will not serve to make protestants parties to the proceedings. This filing is available for review at the Commission in the Public Reference Room or may be viewed on the Commission's Web site at *http://www.ferc.gov* using the ''FERRIS'' link. Enter the docket number excluding the last three digits in the docket number field to access the document. Comments, protests and interventions may be filed electronically via the Internet in lieu of paper. For assistance, please contact FERC Online Support at *FERCOnlineSupport@ferc.gov* or toll-free at (866) 208–3676, or TTY, contact (202) 502–8659. The Commission strongly encourages electronic filings. *See* 18 CFR 385.2001(a)(1)(iii) and the instructions on the Commission's Web site under the ''e-Filing'' link.

Protest Date: July 31, 2003.

Magalie R. Salas,

Secretary.

[FR Doc. 03–19398 Filed 7–30–03; 8:45 am]

BILLING CODE 6717–01–P

DEPARTMENT OF ENERGY

Federal Energy Regulatory Commission

[Docket No. RP03–551–000]

Wisconsin Gas Company, Complainant, v. Viking Gas Transmission Company, Respondent; Notice of Complaint

July 23, 2003.

Take notice that on July 21, 2003, Wisconsin Gas Company (Wisconsin Gas) tendered for filing with the Federal Energy Regulatory Commission (Commission), a Complaint Requesting Fast Track Processing against Viking Gas Transmission Company (Viking) pursuant to Section 5 of the Natural Gas Act, 15 U.S.C. 717d, and Rule 206 of the Commission's Rules of Practice and Procedure, 18 CFR 385.206.

Wisconsin Gas alleges that Viking has unduly discriminated against Wisconsin Gas by refusing to enter into a negotiated rate agreement with Wisconsin Gas similar to the agreements Viking entered with Northern States Power Company (NSP), to whom Wisconsin Gas states it is similarly situated, and who was Viking's affiliate at the time the Viking-NSP agreements were executed and went into effect.

Any person desiring to be heard or to protest this filing should file with the Federal Energy Regulatory Commission, 888 First Street, NE., Washington, DC 20426, in accordance with Rules 211 and 214 of the Commission's Rules of Practice and Procedure (18 CFR 385.211 and 385.214). Protests will be considered by the Commission in determining the appropriate action to be taken, but will not serve to make protestants parties to the proceeding. Any person wishing to become a party must file a motion to intervene. The answer to the complaint and all comments, interventions or protests must be filed on or before the comment date below. This filing is available for review at the Commission in the Public Reference Room or may be viewed on the Commission's Web site at *http://www.ferc.gov* using the ''FERRIS'' link. Enter the docket number excluding the last three digits in the docket number field to access the document. For assistance, please contact FERC Online Support at *FERCOnlineSupport@ferc.gov* or toll-free at (866) 208–3676, or for TTY, contact (202) 502–8659. The answer to the complaint, comments, protests and interventions may be filed electronically via the Internet in lieu of paper; *see* 18 CFR 385.2001(a)(1)(iii) and the instructions on the Commission's Web site under the ''e-Filing'' link. The Commission strongly encourages electronic filings.

Comment Date: August 11, 2003.

Magalie R. Salas,

Secretary.

[FR Doc. 03–19397 Filed 7–30–03; 8:45 am]

BILLING CODE 6717–01–P

DEPARTMENT OF ENERGY

Federal Energy Regulatory Commission

[Docket No. EC98–40–003, et al.]

American Electric Power Company, et al.; Electric Rate and Corporate Filings

July 22, 2003

The following filings have been made with the Commission. The filings are listed in ascending order within each docket classification.

1. American Electric Power Company

[Docket Nos. EC98–40–003, ER98–2770–004, and ER98–2786–004]

Take notice that on July 17, 2003, the Market Monitor filed Market Monitoring of American Electric Power: Twelfth Quarterly Report to Federal Energy Regulatory Commission.

Comment Date: August 7, 2003.

2. The Clark Fork and Blackfoot, LLC

[Docket No. EG03–83–000]

Take notice that on July 18, 2003, The Clark Fork and Blackfoot, LLC (CFB) filed with the Federal Energy Regulatory Commission (Commission) an application for determination of exempt wholesale generator status pursuant to part 365 of the Commission's regulations.

The (CFB) states that it owns and operates a hydroelectric facility with a total capacity of 3 MW, known as the Milltown Dam Facility (located near Missoula, Montana).

Comment Date: August 12, 2003.

3. PPL Electric Utilities Corporation

[Docket No. ER00–1712–003]

Take notice that on July 17, 2003, PPL Electric Utilities Corporation filed with the Federal Energy Regulatory Commission (Commission) an updated market power analysis pursuant to the Commission's order in Pennsylvania

Power & Light Company, 80 FERC ¶ 61,053.

PPL Electric Utilities Corporation states it has served a copy of this filing on the parties on the Commission's service list in Docket No. ER97–3055–000.

Comment Date: August 7, 2003.

4. California Independent System Operator Corporation

[Docket No. ER03–683–003]

Take notice that on July 18, 2003, the California Independent System Operator Corporation (ISO) submitted an addendum to its filing in Docket No. ER03–683–002 made on June 20, 2003 filing in compliance with the Commission's May 30, 2003 Order issued in Docket No. ER03–683–000, 103 FERC ¶ 61,265. The ISO states it has served copies of this filing upon all entities that are on the official service list for this proceeding.

Comment Date: August 8, 2003.

5. Mid American Energy Company

[Docket No. ER03–825–001]

Take notice that on July 17, 2003, MidAmerican Energy Company (MidAmerican), filed an amendment to its May 7, 2003 filing in Docket No. ER03–825–000 concerning a Construction and Expense Reimbursement Agreement with the City of Ames, Iowa (Ames) dated April 30, 2003.

MidAmerican requests an effective date of May 8, 2003, for the Agreement with Ames, and accordingly seeks a waiver of the Commission's notice requirement. MidAmerican states it has served a copy of the filing on Ames, the Iowa Utilities Board, the Illinois Commerce Commission and the South Dakota Public Utilities Commission.

Comment Date: August 7, 2003.

6. Salko Energy Services, Inc.

[Docket No. ER03–1063–000]

Take notice that on July 14, 2003, Salko Energy Services, Inc., filed a Notice of Cancellation of its market based rate tariff. Salko Energy Services, Inc., states that it was dissolved effective December 31, 200, and has not entered into any contracts to sell power.

Comment Date: August 1, 2003.

7. National Power Marketing Company, LLC

[Docket No. ER03–1073–000]

Take notice that on July 10, 2003, National Power Marketing Company, LLC, (National) filed a Notice of Cancellation of its market-based rate tariff to be effective January 1, 2002. National states that it has not used its market-based rate authority and does not foresee entering into any contracts to sell power.

Comment Date: August 1, 2003.

8. Midwest Independent Transmission System Operator, Inc.

[Docket No. ER03–1081–000]

Take notice that on July 17, 2003, the Midwest Independent Transmission System Operator, Inc. (Midwest ISO) pursuant to section 205 of the Federal Power Act and Section 35.12 of the Commissions' regulations, 18 CFR 35.12, submitted for filing an unexecuted Interconnection and Operating Agreement among Otter Tail Power Company, FPL Energy North Dakota Wind II and the Midwest Independent Transmission System Operator, Inc.

Midwest ISO states that a copy of this filing was served on Otter Tail Power Company and FPL Energy Hancock County Wind, LLC.

Comment Date: August 7, 2003.

9. Southern California Edison Company

[Docket No. ER03–1082–000]

Take notice that on July 17, 2003, Southern California Edison Company (SCE) tendered for filing a Service Agreement for Wholesale Distribution Service under SCE's Wholesale Distribution Access Tariff and an Interconnection Facilities Agreement (Agreements) between SCE and WM Energy Solutions, Inc. (WMES). SCE respectfully requests the Agreements become effective on July 8, 2003.

WMES states that it intends to develop the Simi Valley Landfill Energy Project, a 2.7 MW gas engine generating facility to be located at 2801 North Madera Road in Simi Valley, California (Simi Valley Landfill Energy Project). WMES also states that these Agreements specify the terms and conditions under which SCE will interconnect the Simi Valley Landfill Energy Project to its electrical system and provide wholesale Distribution Service for up to 2.56 MW of power produced by the Project.

SCE states that copies of this filing were served upon the Public Utilities Commission of the State of California and WMES.

Comment Date: August 7, 2003.

10. Southern California Edison Company

[Docket No. ER03–1083–000]

Take notice that on July 17, 2003, Southern California Edison Company (SCE) tendered for filing revised rate sheets (Revised Sheets) to the Service Agreement between SCE and the City of Colton, under the Wholesale Distribution Access Tariff, FERC Electric Tariff, Original Volume No.5. SCE states that the Revised Sheets reflect a four month extension of the Service Agreement.

SCE requests an effective date of July 18, 2003. SCE states that copies of this filing were served upon the Public Utilities Commission of the State of California and the City of Colton.

Comment Date: August 7, 2003.

11. Aurora Power Resources, Inc.

[Docket No. ER03–1084–000]

Take notice that on July 17, 2003, Aurora Power Resources, Inc., (Aurora), tendered for filing a Notice of Cancellation of its Market-based rate tariff to the effective April 24, 2003. Aurora states that it is not currently selling energy, nor does it have any future plans to do so.

Comment Date: August 7, 2003.

12. PJM Interconnection, L.L.C.

[Docket No. ER03–1086–000]

Take notice that on July 17, 2003, PJM Interconnection, L.L.C. (PJM) submitted revisions to the PJM Open Access Transmission Tariff (Tariff) and the Amended and Restated Operating Agreement of PJM Interconnection, L.L.C. (Operating Agreement) to expand and clarify the provisions in PJM's market rules pertaining to lost opportunity cost compensation to generators.

PJM requests waiver of Section 35.3 of the Commission's regulations (18 CFR 35.3) to permit an effective date of July 18, 2003 for the proposed revisions. PJM states that copies of the filing were served on all PJM members and on the utility regulatory commissions in the PJM region.

Comment Date: August 7, 2003.

13. AES Mohave, LLC

[Docket No. ER03–1087–000]

Take notice that, on July 17, 2003, AES Mohave, LLC (AES Mohave) filed a Notice of Cancellation of its FERC Electric Tariff, Original Volume No. 1. AES Mohave requests that this Notice of Cancellation be effective as of July 17, 2003.

AES Mohave states that a copy of the Notice of Cancellation has been sent to Nevada Power Company.

Comment Date: August 7, 2003.

14. Direct Energy Marketing Inc.

[Docket No. ER03–1088–000]

Take notice that on July 17, 2003, Direct Energy Marketing Inc. (DEMI) tendered for filing an application for authority to sell electric energy, capacity and certain ancillary services at market-

based rates under section 205(a) of the Federal Power Act, 16 U.S.C.824d(a), and accompanying requests for certain blanket approvals and for the waiver of certain Commission regulations. DEMI also seeks authorization to reassign any transmission rights it may obtain. DEMI requests that the Commission accept its FERC Electric Tariff, Original Volume No. 1 for filing.

Comment Date: August 7, 2003.

15. New England Power Pool

[Docket No. ER03–1089–000]

Take notice that on July 18, 2003, the New England Power Pool (NEPOOL) submitted the Ninety-Seventh Agreement Amending New England Power Pool Agreement, which NEPOOL states updates and corrects certain information in section 25D of the Restated NEPOOL Open Access Transmission Tariff (the NEPOOL Tariff) and in Attachments G and G–1 and the accompanying Addendum (collectively, Attachment G) of the NEPOOL Tariff. NEPOOL has requested a September 15, 2003 effective date for these changes.

NEPOOL states that copies of these materials were sent to the NEPOOL Participants, Non-Participant Transmission Customers and the New England state governors and regulatory commissions.

Comment Date: August 8, 2003.

16. California Independent System Operator Corporation

[Docket No. ER03–1090–000]

Take notice that on July 18, 2003, the California Independent System Operator Corporation (ISO), tendered for filing a Participating Generator Agreement between the ISO and Energia Azteca X, S. de R.L. de C.V. (EAX) for acceptance by the Commission.

The ISO is requesting waiver of the 60-day notice requirement to allow the Participating Generator Agreement to be made effective July 15, 2003.The ISO states that this filing has been served on EAX and the California Public Utilities Commission.

Comment Date: August 8, 2003.

17. The Potomac Edison Company

[Docket No. ER03–1092–000]

Take notice that on July 18, 2003, Allegheny Energy Service Corporation on behalf of The Potomac Edison Company, doing business as Allegheny Power, tendered for filing pursuant to the Federal Energy Regulatory Commission's regulations, 18 CFR 35.15, a Notice of Termination of The Potomac Edison Company, Rate Schedule FERC Nos. 56 through 59 consisting of Power Service Agreements with the City of Hagerstown and the Towns of Thurmont, Front Royal and Williamsport, respectively. The Agreements terminated by their own terms effective 11:59 p.m. on June 30, 2003.

The Potomac Edison Company states that copies of the filing have been provided to each jurisdictional customer and their counsel of record, the Maryland Public Service Commission and the Virginia State Corporation Commission.

Comment Date: August 8, 2003.

Standard Paragraph

Any person desiring to intervene or to protest this filing should file with the Federal Energy Regulatory Commission, 888 First Street, NE., Washington, DC 20426, in accordance with Rules 211 and 214 of the Commission's Rules of Practice and Procedure (18 CFR 385.211 and 385.214). Protests will be considered by the Commission in determining the appropriate action to be taken, but will not serve to make protestants parties to the proceeding. Any person wishing to become a party must file a motion to intervene. All such motions or protests should be filed on or before the comment date, and, to the extent applicable, must be served on the applicant and on any other person designated on the official service list. This filing is available for review at the Commission or may be viewed on the Commission's Web site at *http://www.ferc.gov* , using the ''FERRIS'' link. Enter the docket number excluding the last three digits in the docket number field to access the document. For assistance, contact FERC Online Support at *FERCOnlineSupport@ferc.gov* or toll-free at (866) 208–3676, or for TTY, contact (202) 502–8659. Protests and interventions may be filed electronically via the Internet in lieu of paper; *see* 18 CFR 385.2001(a)(1)(iii) and the instructions on the Commission's Web site under the ''e-Filing'' link. The Commission strongly encourages electronic filings.

Magalie R. Salas,

Secretary.

[FR Doc. 03–19381 Filed 7–30–03; 8:45 am]

BILLING CODE 6717–01–P

DEPARTMENT OF ENERGY

Federal Energy Regulatory Commission

[Project No. 12379–000]

Lake Dorothy Hydro, Inc., Alaska; Notice of Ava

July 24, 2003.

In accordance with the National Environmental Policy Act of 1969 and the Federal Energy Regulatory Commission's (Commission) regulations, 18 CFR part 380 (Order No. 486; 52 FR 47897), the staff of the Office of Energy Projects has reviewed the application for license for the Lake Dorothy Hydroelectric Project, located at Lake Dorothy on Dorothy Creek, near Juneau, Alaska, and has prepared a Final Environmental Assessment (FEA) for the project. The project would occupy approximately 1,790 acres of land within the Tongass National Forest administered by the U.S. Forest Service.

On June 4, 2003, the Commission staff issued a draft environmental assessment (DEA) for the project and requested that comments be filed with the Commission within 30 days. Comments on the DEA were filed by July 3, 2003, and are addressed in the FEA.

The FEA contains the staff's analysis of the potential environmental impacts of the project and concludes that licensing the project, with appropriate environmental protective measures, would not constitute a major federal action that would significantly affect the quality of the human environment.

A copy of the FEA is available for review at the Commission in the Public Reference Room or may be viewed on the Commission's Web site at *http://www.ferc.gov* using the ''FERRIS'' link. Enter the docket number excluding the last three digits in the docket number field to access the document. For assistance, contact FERC Online Support at *FERCOnlineSupport@ferc.gov* or toll-free at 1–866–208–3676, or for TTY, (202) 502–8659.

You may also register online at *http://www.ferc.gov/esubscribenow.htm* to be notified via email of new filings and issuances related to this or other pending projects. For assistance, contact FERC Online Support.

Magalie R. Salas,

Secretary.

[FR Doc. 03–19388 Filed 7–30–03; 8:45 am]

BILLING CODE 6717–01–P

DEPARTMENT OF ENERGY

Federal Energy Regulatory Commission

[Project No. 1025–054]

Safe Harbor Water Power Corporation; Notice of Availability of Environmental Assessment

July 23, 2003.

In accordance with the National Environmental Policy Act of 1969 and the Federal Energy Regulatory Commission's (Commission) regulations, 18 CFR part 380 (Order No. 486; 52 FR 47897), the staff of the Office of Energy Projects has prepared an Environmental Assessment (EA) for an application requesting Commission approval to allow the York Water Company use of the Safe Harbor Project lands and waters to withdraw 12 million gallons-per-day from Lake Clarke on the Susquehanna River for a municipal water supply. The project is located on the Susquehanna River in Lancaster and York Counties, Pennsylvania. The subject land does not involve federal or tribal lands.

The EA was attached to the Order Approving Non-Project Use of Project Lands and Water, issued on July 17, 2003. The EA contains the staff's analysis of the potential environmental impacts of the proposal and concludes that approval of the proposal would not constitute a major federal action that would significantly affect the quality of the human environment.

A copy of the EA is available for review at the Commission in the Public Reference Room, or it may be viewed on the Commission's Web site at *http://www.ferc.gov* using the ''FERRIS'' link. Enter the docket number (prefaced by P– and excluding the last three digits, in the docket number field to access the document. For assistance, call contact FERC Online Support at *FERCOnlineSupport@ferc.gov* or toll-free at (866) 208–3676, or TTY, contact (202) 502–8659.

For further information, contact Hillary Berlin at 202–502–8915.

Magalie R. Salas,

Secretary.

[FR Doc. 03–19386 Filed 7–30–03; 8:45 am]

BILLING CODE 6717–01–P

DEPARTMENT OF ENERGY

Federal Energy Regulatory Commission

Notice of Application Accepted for Filing and Soliciting Comments, Protests, and Motions To Intervene

July 23, 2003.

Take notice that the following hydroelectric application has been filed with the Commission and is available for public inspection:

a. *Type of Application:* Preliminary Permit.

b. *Project No.:* 12335–000.

c. *Date filed:* August 13, 2002 and Supplemented on February 7, 2003.

d. *Applicant:* Universal Electric Power Corporation.

e. *Name and Location of Project:* The Rome Dam Hydroelectric Project would be located on the West Branch Ausable River in Clinton and Essex Counties, New York, at the existing Rome Dam owned by Mr. Stan Kivort. The proposed project would not utilize federal or tribal lands.

f. *Filed Pursuant to:* Federal Power Act, 16 U.S.C. 791(a)—825(r).

g. *Applicant contact:* Mr. Raymond Helter, Universal Electric Power Corporation, 1145 Highbrook Street, Akron, OH 44301, Telephone (330) 535–7115.

h. *FERC Contact:* Mr. Lynn R. Miles, (202) 502–8763.

i. *Deadline for filing comments, protests, and motions to intervene:* 60 days from the issuance date of this notice.

The Commission's Rules of Practice and Procedure require all interveners filing documents with the Commission to serve a copy of that document on each person in the official service list for the project. Further, if an intervener files comments or documents with the Commission relating to the merits of an issue that may affect the responsibilities of a particular resource agency, they must also serve a copy of the document on that resource agency.

j. *Description of Project:* The proposed run-of-river project would consist of: (1) An existing 180-foot-long, 40-foot-high concrete dam, (2) an impoundment with a surface area of 8 acres and a storage capacity of 150 acre-feet at normal maximum water surface elevation of 628 feet m.s.l., (3) four proposed 80-foot-long, 2.2-foot-diameter penstocks, (4) a proposed powerhouse containing four generating units with a combined installed capacity of 7.75 megawatts, (5) a proposed 300-foot-long, 14.7-kv transmission line, and (6) appurtenant facilities. The project would have an average annual generation of 46 GWh.

k. This filing is available for review at the Commission in the Public Reference Room or may be viewed on the Commission's Web site at *http://www.ferc.gov* using the ''FERRIS'' link. Enter the docket number excluding the last three digits in the docket number field to access the document. For assistance, call toll-free 1–866–208–3676 or e-mail *FERCOnlineSupport@ferc.gov*. For TTY, call (202) 502–8659. A copy is also available for inspection and reproduction at the address in item h. above.

m. *Competing Preliminary Permit:* Anyone desiring to file a competing application for preliminary permit for a proposed project must submit the competing application itself, or a notice of intent to file such an application, to the Commission on or before the specified comment date for the particular application (*see* 18 CFR 4.36). Submission of a timely notice of intent allows an interested person to file the competing preliminary permit application no later than 30 days after the specified comment date for the particular application. A competing preliminary permit application must conform with 18 CFR 4.30(b) and 4.36.

n. *Competing Development Application:* Any qualified development applicant desiring to file a competing development application must submit to the Commission, on or before a specified comment date for the particular application, either a competing development application or a notice of intent to file such an application. Submission of a timely notice of intent to file a development application allows an interested person to file the competing application no later than 120 days after the specified comment date for the particular application. A competing license application must conform with 18 CFR 4.30(b) and 4.36.

o. *Notice of Intent:* A notice of intent must specify the exact name, business address, and telephone number of the prospective applicant, and must include an unequivocal statement of intent to submit, if such an application may be filed, either a preliminary permit application or a development application (specify which type of application). A notice of intent must be served on the applicant(s) named in this public notice.

p. *Proposed Scope of Studies under Permit:* A preliminary permit, if issued, does not authorize construction. The term of the proposed preliminary permit would be 36 months. The work proposed under the preliminary permit would include economic analysis,

preparation of preliminary engineering plans, and a study of environmental impacts. Based on the results of these studies, the Applicant would decide whether to proceed with the preparation of a development application to construct and operate the project.

q. *Comments, Protests, or Motions to Intervene:* Anyone may submit comments, a protest, or a motion to intervene in accordance with the requirements of Rules of Practice and Procedure, 18 CFR 385.210, 385.211, 385.214. In determining the appropriate action to take, the Commission will consider all protests or other comments filed, but only those who file a motion to intervene in accordance with the Commission's Rules may become a party to the proceeding. Any comments, protests, or motions to intervene must be received on or before the specified comment date for the particular application.

r. *Filing and Service of Responsive Documents:* Any filings must bear in all capital letters the title ''COMMENTS'', ''NOTICE OF INTENT TO FILE COMPETING APPLICATION'', ''COMPETING APPLICATION'', ''PROTEST'', or ''MOTION TO INTERVENE'', as applicable, and the Project Number of the particular application to which the filing refers. Any of the above-named documents must be filed by providing an original and eight copies to: Magalie R. Salas, Secretary, Federal Energy Regulatory Commission, 888 First Street, NE., Washington, DC 20426. An additional copy must be sent to Director, Division of Hydropower Administration and Compliance, Federal Energy Regulatory Commission, at the above-mentioned address. A copy of any notice of intent, competing application or motion to intervene must also be served upon each representative of the Applicant specified in the particular application.

Comments, protests, and interventions may be filed electronically via the Internet in lieu of paper; *see* 18 CFR 385.2001(a)(1)(iii) and the instructions on the Commission's Web site under the ''e-Filing'' link. The Commission strongly encourages electronic filings.

s. *Agency Comments:* Federal, state, and local agencies are invited to file comments on the described application. A copy of the application may be obtained by agencies directly from the Applicant. If an agency does not file comments within the time specified for filing comments, it will be presumed to have no comments. One copy of an agency's comments must also be sent to the Applicant's representatives.

Magalie R. Salas,

Secretary.

[FR Doc. 03–19387 Filed 7–30–03; 8:45 am]

BILLING CODE 6717–01–P

DEPARTMENT OF ENERGY

Federal Energy Regulatory Commission

[Project No. 12380–000]

Notice of Application Accepted for Filing and Soliciting Motions to Intervene, Protests, and Comments

July 24, 2003.

Take notice that the following hydroelectric application has been filed with the Commission and is available for public inspection:

a. *Type of Application:* Preliminary Permit.

b. *Project No.:* 12380–000.

c. *Date filed:* October 1, 2002 (Supplemented March 20, 2003).

d. *Applicant:* Mokelumne River Water and Power Authority.

e. *Name of Project:* Conjunctive Use Project.

f. *Location:* On the Mokelumne River, in Calaveras and San Joaquinn Counties, California. The existing dam is owned by the East Bay Municipal Utility District. The Applicant is proposing to study the development of additional capacity to and in a way that would not affect the operation of the currently licensed Lower Mokelumne River Project FERC No. 2916 operated by East Bay Municipal Utility District.

g. *Filed Pursuant to:* Federal Power Act, 16 U.S.C. 791a–825r.

h. *Applicant Contact:* Mr. Tom Flinn, Secretary, Mokelumne River Water and Power Authority, PO Box 1810, 1810 E. Hazelton Avenue, Stockton, CA 95201, (209) 468–3000 , and Ms. Elizabeth W. Whittle, Nixon Peabody LLP, Market Square North, 401 9th Street NW., Suite 900, Washington, DC 20004, (202) 585–8338.

i. *FERC Contact:* Robert Bell, (202) 502–6062.

j. *Deadline for filing comments, protests, and motions to intervene:* 60 days from the issuance date of this notice.

The Commission's Rules of Practice and Procedure require all interveners filing documents with the Commission to serve a copy of that document on each person in the official service list for the project. Further, if an intervener files comments or documents with the Commission relating to the merits of an issue that may affect the responsibilities of a particular resource agency, they must also serve a copy of the document on that resource agency.

k. *Description of Project:* The proposed project would consist of: (1) A proposed diversion-intake structure at the Pardee Reservoir, (2) a proposed 10,300-foot-long tunnel 12 to 15 feet in diameter, (3) a proposed 57,400-foot-long, 10.5-foot-diameter steel penstock, (4) a proposed powerhouse containing two generating units having a total installed capacity of 6 MW, (5) the proposed Duck Creek Reservoir formed by a 130-foot-high, 5,700-foot-long dam plus dikes and having a surface area of 2,980 acres, with storage capacity of 100,000 acre-feet and normal water surface elevation of 274 feet msl, (6) a proposed 1320-foot-long 12 kV transmission line and (7) appurtenant facilities.

The applicant estimates that the average annual generation would be 15 GWh and would be sold to a local utility.

l. This filing is available for review at the Commission in the Public Reference Room or may be viewed on the Commission's Web site at *http://www.ferc.gov* using the ''FERRIS'' link. Enter the docket number excluding the last three digits in the docket number field to access the document. For assistance, call toll-free 1–866–208–3676 or e-mail *FERCOnlineSupport@ferc.gov*. For TTY, call (202) 502–8659. A copy is also available for inspection and reproduction at the address in item h above.

m. *Competing Preliminary Permit:* Anyone desiring to file a competing application for preliminary permit for a proposed project must submit the competing application itself, or a notice of intent to file such an application, to the Commission on or before the specified comment date for the particular application (*see* 18 CFR 4.36). Submission of a timely notice of intent allows an interested person to file the competing preliminary permit application no later than 30 days after the specified comment date for the particular application. A competing preliminary permit application must conform with 18 CFR 4.30(b) and 4.36.

n. *Competing Development Application:* Any qualified development applicant desiring to file a competing development application must submit to the Commission, on or before a specified comment date for the particular application, either a competing development application or a notice of intent to file such an application. Submission of a timely

notice of intent to file a development application allows an interested person to file the competing application no later than 120 days after the specified comment date for the particular application. A competing license application must conform with 18 CFR 4.30(b) and 4.36.

o. *Notice of Intent:* A notice of intent must specify the exact name, business address, and telephone number of the prospective applicant, and must include an unequivocal statement of intent to submit, if such an application may be filed, either a preliminary permit application or a development application (specify which type of application). A notice of intent must be served on the applicant(s) named in this public notice.

p. *Proposed Scope of Studies under Permit:* A preliminary permit, if issued, does not authorize construction. The term of the proposed preliminary permit would be 36 months. The work proposed under the preliminary permit would include economic analysis, preparation of preliminary engineering plans, and a study of environmental impacts. Based on the results of these studies, the Applicant would decide whether to proceed with the preparation of a development application to construct and operate the project.

q. *Comments, Protests, or Motions to Intervene:* Anyone may submit comments, a protest, or a motion to intervene in accordance with the requirements of Rules of Practice and Procedure, 18 CFR 385.210, 385.211, 385.214. In determining the appropriate action to take, the Commission will consider all protests or other comments filed, but only those who file a motion to intervene in accordance with the Commission's Rules may become a party to the proceeding. Any comments, protests, or motions to intervene must be received on or before the specified comment date for the particular application.

r. *Filing and Service of Responsive Documents:* Any filings must bear in all capital letters the title ''COMMENTS'', ''RECOMMENDATIONS FOR TERMS AND CONDITIONS'', ''PROTEST'', OR ''MOTION TO INTERVENE'', as applicable, and the Project Number of the particular application to which the filing refers. Any of the above-named documents must be filed by providing the original and eight copies to: Magalie R. Salas, Secretary, Federal Energy Regulatory Commission, 888 First Street, NE., Washington, DC 20426. A copy of any motion to intervene must also be served upon each representative of the Applicant specified in the particular application.

Comments, protests and interventions may be filed electronically via the Internet in lieu of paper;*See* 18 CFR 385.2001 (a)(1)(iii) and the instructions on the Commission's Web site under ''e-filing'' link. The Commission strongly encourages electronic filing.

s. *Agency Comments:* Federal, state, and local agencies are invited to file comments on the described application. A copy of the application may be obtained by agencies directly from the Applicant. If an agency does not file comments within the time specified for filing comments, it will be presumed to have no comments. One copy of an agency's comments must also be sent to the Applicant's representatives.

Magalie R. Salas,

Secretary.

[FR Doc. 03–19389 Filed 7–30–03; 8:45 am]

BILLING CODE 6717–01–P

DEPARTMENT OF ENERGY

Federal Energy Regulatory Commission

[Project No. 12451–000]

Notice of Application Accepted for Filing and Soliciting Motions To Intervene, Protests, and Comments

July 24, 2003.

Take notice that the following hydroelectric application has been filed with the Commission and is available for public inspection:

a. *Type of Application:* Preliminary Permit.

b. *Project No.:* 12451–000.

c. *Date filed:* March 3, 2003.

d. *Applicant:* SAF Hydroelectric LLC.

e. *Name of Project:* Lower St. Anthony Falls Project.

f. *Location:* On the Mississippi River, in Hennepin County, Minnesota, utilizing the Lower St. Anthony Falls Dam which is administered by the U.S. Army Corps of Engineers. The proposed project would be for additional capacity at the already licensed St. Anthony Falls Project FERC No. 2056 and would be developed in such a way as to not affect Northern States Power licensed project.

g. *Filed Pursuant to:* Federal Power Act, 16 U.S.C. 791(a)—825(r).

h. *Applicant Contact:* Mr. Douglas A. Spaulding, SAF Hydroelectric LLC., C/O Spaulding Consultants, 1433 Utica Avenue South, Suite 162, Minneapolis, MN, 55416 (952) 544–8133.

i. *FERC Contact:* Robert Bell, (202) 502–6062.

j. Deadline for filing comments, protests, and motions to intervene: 60 days from the issuance date of this notice.

The Commission's Rules of Practice and Procedure require all interveners filing documents with the Commission to serve a copy of that document on each person in the official service list for the project. Further, if an intervener files comments or documents with the Commission relating to the merits of an issue that may affect the responsibilities of a particular resource agency, they must also serve a copy of the document on that resource agency.

k. *Description of Project:* The proposed project utilizing the U. S. Army Corps of Engineers's Lower St. Anthony Falls Dam and would consist of: (1) A proposed powerhouse containing a generating unit having an installed capacity of 9.6 MW, (2) a proposed 13.8 kV transmission line, and (3) appurtenant facilities.

The applicant estimates that the average annual generation would be 59 GWh and would be sold to a local utility.

l. This filing is available for review at the Commission in the Public Reference Room or may be viewed on the Commission's Web site at *http://www.ferc.gov* using the ''FERRIS'' link. Enter the docket number excluding the last three digits in the docket number field to access the document. For assistance, call toll-free 1–866–208–3676 or e-mail *FERCOnlineSupport@ferc.gov*. For TTY, call (202) 502–8659. A copy is also available for inspection and reproduction at the address in item h above.

m. *Competing Preliminary Permit:* Anyone desiring to file a competing application for preliminary permit for a proposed project must submit the competing application itself, or a notice of intent to file such an application, to the Commission on or before the specified comment date for the particular application (*see* 18 CFR 4.36). Submission of a timely notice of intent allows an interested person to file the competing preliminary permit application no later than 30 days after the specified comment date for the particular application. A competing preliminary permit application must conform with 18 CFR 4.30(b) and 4.36.

n. *Competing Development Application:* Any qualified development applicant desiring to file a competing development application must submit to the Commission, on or before a specified comment date for the particular application, either a competing development application or a notice of intent to file such an application. Submission of a timely notice of intent to file a development application allows an interested person

to file the competing application no later than 120 days after the specified comment date for the particular application. A competing license application must conform with 18 CFR 4.30(b) and 4.36.

o. *Notice of Intent:* A notice of intent must specify the exact name, business address, and telephone number of the prospective applicant, and must include an unequivocal statement of intent to submit, if such an application may be filed, either a preliminary permit application or a development application (specify which type of application). A notice of intent must be served on the applicant(s) named in this public notice.

p. *Proposed Scope of Studies under Permit:* A preliminary permit, if issued, does not authorize construction. The term of the proposed preliminary permit would be 36 months. The work proposed under the preliminary permit would include economic analysis, preparation of preliminary engineering plans, and a study of environmental impacts. Based on the results of these studies, the Applicant would decide whether to proceed with the preparation of a development application to construct and operate the project.

q. *Comments, Protests, or Motions to Intervene:* Anyone may submit comments, a protest, or a motion to intervene in accordance with the requirements of Rules of Practice and Procedure, 18 CFR 385.210, 385.211, 385.214. In determining the appropriate action to take, the Commission will consider all protests or other comments filed, but only those who file a motion to intervene in accordance with the Commission's Rules may become a party to the proceeding. Any comments, protests, or motions to intervene must be received on or before the specified comment date for the particular application.

r. *Filing and Service of Responsive Documents* Any filings must bear in all capital letters the title ''COMMENTS'', ''RECOMMENDATIONS FOR TERMS AND CONDITIONS'', ''PROTEST'', OR ''MOTION TO INTERVENE'', as applicable, and the Project Number of the particular application to which the filing refers. Any of the above-named documents must be filed by providing an original and eight copies to: Magalie R. Salas, Secretary, Federal Energy Regulatory Commission, 888 First Street, NE., Washington, DC 20426. A copy of any motion to intervene must also be served upon each representative of the Applicant specified in the particular application.

Comments, protests and interventions may be filed electronically via the Internet in lieu of paper;*See* 18 CFR 385.2001 (a)(1)(iii) and the instructions on the Commission's Web site under ''e-filing'' link. The Commission strongly encourages electronic filing.

s. *Agency Comments:* Federal, state, and local agencies are invited to file comments on the described application. A copy of the application may be obtained by agencies directly from the Applicant. If an agency does not file comments within the time specified for filing comments, it will be presumed to have no comments. One copy of an agency's comments must also be sent to the Applicant's representatives.

Magalie R. Salas,

Secretary.

[FR Doc. 03–19390 Filed 7–30–03; 8:45 am]

BILLING CODE 6717–01–P

DEPARTMENT OF ENERGY

Federal Energy Regulatory Commission

Notice of Application and Applicant-Prepared EA Accepted for Filing, Soliciting Motions to Intervene and Protests, and Soliciting Comments, and Final Recommendations, Terms and Conditions, and Prescriptions

July 23, 2003.

Take notice that the following hydroelectric application and applicant-prepared environmental assessment has been filed with the Commission and is available for public inspection.

a. *Type of Application:* New Major License.

b. *Project No.:* 2169–020.

c. *Date Filed:* February 21, 2003.

d. *Applicant:* Alcoa Power Generating Inc (APGI).

e. *Name of Project:* Topoco Project.

f. *Location:* On the Little Tennessee and Cheoah Rivers in Graham and Swain Counties, North Carolina and Blount and Monroe Counties, Tennessee. The project affects Federal lands.

g. *Filed Pursuant to:* Federal Power Act 16 U.S.C. 791(a)–825(r).

h. *Applicant Contact:* Mr. Norman L. Pierson, Property and Relicensing Manager, Alcoa Power Generation Inc., Tapoco Division, 300 North Hall Road, Alcoa, TN 37701–2516, (865) 977.3326

i. *FERC Contact:* Randy Yates at (770) 452–3784, or *lorance.yates@ferc.gov*.

j. Deadline for filing motions to intervene and protests, comments, and final recommendations, terms and conditions, and prescriptions is 60 days from the issuance of this notice; reply comments are due 105 days from the issuance date of this notice.

All documents (original and eight copies) should be filed with: Magalie R. Salas, Secretary, Federal Energy Regulatory Commission, 888 First Street, NE., Washington, DC 20426.

The Commission's Rules of Practice require all intervenors filing documents with the Commission to serve a copy of that document on each person on the official service list for the project. Further, if an intervenor files comments or documents with the Commission relating to the merits of an issue that may affect the responsibilities of a particular resource agency, they must also serve a copy of the document on that resource agency.

Motions to intervene and protests, comments, recommendations, terms and conditions, and prescriptions may be filed electronically via the Internet in lieu of paper. The Commission strongly encourages electronic filings. *See* 18 CFR 385.2001(a)(1)(iii) and the instructions on the Commission's Web site (*http://www.ferc.gov*) under the ''e-Filing'' link.

k. This application has been accepted for filing.

1. The proposed Tapoco Project includes four developments: Santeetlah Development consisting of: (1) 1,054-foot-high and 216-foot-high concrete arch dam; (2) 25,176 foot long tunnel/pipeline; (3) 2,881-acre reservoir; (4) powerhouse with two generating units and total original installed capacity of 45-MW and with proposed upgraded 47-MW; and (5) 750-foot-long 161 kV transmission line.

Cheoah Development consisting of: (1) 750-foot-long and 229-foot high curved concrete gravity dam; (2) 644-acre reservoir; (3) powerhouse with 4 vertical Francis turbine units directly connected to generators and 1-independent Francis turbine unit added in 1949; and (4) with total original installed capacity of 110-MW and with proposed upgrades, 144.7-MW total installed capacity.

Calderwood Development consisting of: (1) 916-foot-long and 230-foot-high concrete arch dam; (2) 570-acre reservoir; (3) 2,050-foot-long tunnel; and (4) powerhouse with 3 Francis turbine units, which have been upgraded to a total installed capacity of 140.4-MW.

Chilhowee Development consisting of: (1) 1,483-foot-long and 88.5-foot-high concrete gravity dam; (2) 1.734-acre reservoir; and (3) powerhouse with 3 Kaplan turbine units with total installed capacity of 48-MW

m. A copy of the application is available for review at the Commission in the Public Reference Room or may be viewed on the Commission's Web site at *http://www.ferc.gov* using the ''FERRIS''

link. Enter the docket number excluding the last three digits in the docket number field to access the document. For assistance, contact FERC Online Support at *FERCOnlineSupport@ferc.gov* or toll-free at 1–866–208–3676, or for TTY, (202) 502–8659. A copy is also available for inspection and reproduction at the address in item h above.

n. Anyone may submit comments, a protest, or a motion to intervene in accordance with the requirements of Rules of Practice and Procedure, 18 CFR 385.210, 385.211, 385.214. In determining the appropriate action to take, the Commission will consider all protests or other comments filed, but only those who file a motion to intervene in accordance with the Commission's Rules may become a party to the proceeding. Any comments, protests, or motions to intervene must be received on or before the specified comment date for the particular application.

All filings must (1) bear in all capital letters the title ''PROTEST'', ''MOTION TO INTERVENE'', ''COMMENTS,'' ''REPLY COMMENTS,'' ''RECOMMENDATIONS,'' ''TERMS AND CONDITIONS,'' or ''PRESCRIPTIONS;'' (2) set forth in the heading the name of the applicant and the project number of the application to which the filing responds; (3) furnish the name, address, and telephone number of the person protesting or intervening; and (4) otherwise comply with the requirements of 18 CFR 385.2001 through 385.2005. All comments, recommendations, terms and conditions or prescriptions must set forth their evidentiary basis and otherwise comply with the requirements of 18 CFR 4.34(b). Agencies may obtain copies of the application directly from the applicant. A copy of any protest or motion to intervene must be served upon each representative of the applicant specified in the particular application. A copy of all other filings in reference to this application must be accompanied by proof of service on all persons listed in the service list prepared by the Commission in this proceeding, in accordance with 18 CFR 4.34(b) and 385.2010.

You may also register online at *http://www.ferc.gov/esubscribenow.htm* to be notified via email of new filings and issuances related to this or other pending projects. For assistance, contact FERC Online Support.

The application will be processed according to the following revised Hydro Licensing Schedule. Other revisions to the schedule may be made as appropriate.

Deadline for Agency Recommendations: September 2003.

Deadline for Reply Comments: November 2003.

Notice of the availability of the EA: January 2004.

Public Comments on EA due: March 2004.

Ready for Commission's decision on the application: July 2004.

Magalie R. Salas,

Secretary.

[FR Doc. 03–19391 Filed 7–30–03; 8:45 am]

BILLING CODE 6717–01–P

DEPARTMENT OF ENERGY

Federal Energy Regulatory Commission

[Project No. 2485–021]

Notice of Application for Amendment of License and Soliciting Comments, Motions To Intervene, and Protests

July 23, 2003.

Take notice that the following application has been filed with the Commission and is available for public inspection:

a. *Application Type:* Amendment of Recreation Plan.

b. *Project No:* 2485–021.

c. *Date Filed:* May 28, 2003.

d. *Applicant:* Northeast Generation Company.

e. *Name of Project:* Northfield Mountain Pumped Storage Project.

f. *Location:* The project is located on the Connecticut River in Franklin County, Massachusetts.

g. *Filed Pursuant to:* Federal Power Act, 16 U.S.C. 791(a)–825(r) and 799 and 801.

h. *Applicant Contact:* Catherine E. Shively, Senior Counsel, Northeast Utilities Service Company, 780 North Commercial Street, P.O. Box 330, Manchester, NH 03105 (603) 634–2326.

i. *FERC Contact:* Any questions on this notice should be addressed to Mrs. Heather Campbell at (202) 502–6182 or e-mail address: *heather.campbell@ferc.gov*.

j. *Deadline for filing comments and or motions:* August 25, 2003.

All documents (original and eight copies) should be filed with: Magalie R. Salas, Secretary, Federal Energy Regulatory Commission, 888 First Street, NE., Washington, DC 20426. Please include the project number (P–2485–021) Federal Energy Regulatory Commission, 888 First Street, NE., Washington, DC 20426. Comments, protests, and interventions may be filed electronically via the Internet in lieu of paper. *See* 18 CFR 385.2001(a)(1)(iii) and the instructions on the Commission's Web site under the ''e-Filing'' link.

k. *Description of the Application:* Northeast Utilities Service Company is requesting an amendment of its approved recreation plan to permanently suspend public tours of the project's powerhouse and upper reservoir. Tours would be provided to groups specifically invited by the licensee. No other public access areas would be affected.

l. *Locations of the Application*: This filing is available for review at the Commission in the Public Reference Room or may viewed on the Commission's Web site at *http://www.ferc.gov* using the ''FERRIS'' link. Enter the docket number excluding the last three digits in the docket number field to access the document. For assistance, please contact FERC Online Support at *FERCOnlineSupport@ferc.gov* or toll-free at (866) 208–3676, or for TTY, contact (202) 502–8659. A copy is also available for inspection and reproduction at the address in item h above.

m. Individuals desiring to be included on the Commission's mailing list should so indicate by writing to the Secretary of the Commission.

n. *Comments, Protests, or Motions to Intervene:* Anyone may submit comments, a protest, or a motion to intervene in accordance with the requirements of Rules of Practice and Procedure, 18 CFR 385.210, 385.211, 385.214. In determining the appropriate action to take, the Commission will consider all protests or other comments filed, but only those who file a motion to intervene in accordance with the Commission's Rules may become a party to the proceeding. Any comments, protests, or motions to intervene must be received on or before the specified comment date for the particular application.

o. *Filing and Service of Responsive Documents:* Any filings must bear in all capital letters the title ''COMMENTS'', ''RECOMMENDATIONS FOR TERMS AND CONDITIONS'', ''PROTEST'', OR ''MOTION TO INTERVENE'', as applicable, and the Project Number of the particular application to which the filing refers. Any of the above-named documents must be filed by providing the original and the number of copies provided by the Commission's regulations to: The Secretary, Federal Energy Regulatory Commission, 888 First Street NE., Washington, DC 20426. A copy of any motion to intervene must also be served upon each representative

of the Applicant specified in the particular application.

p. *Agency Comments:* Federal, state, and local agencies are invited to file comments on the described application. A copy of the application may be obtained by agencies directly from the Applicant. If an agency does not file comments within the time specified for filing comments, it will be presumed to have no comments. One copy of an agency's comments must also be sent to the Applicant's representatives.

q. Comments, protests and interventions may be filed electronically via the Internet in lieu of paper. *See* 18 CFR 385.2001(a)(1)(iii) and the instructions on the Commission's Web site at *http://www.ferc.gov* under the ''e-Filing'' link.

Magalie R. Salas,

Secretary.

[FR Doc. 03–19392 Filed 7–30–03; 8:45 am]

BILLING CODE 6717–01–P

ENVIRONMENTAL PROTECTION AGENCY

[OECA–2003–0089; FRL–7538–4]

Agency Information Collection Activities; Submission of EPA ICR Number 1712.04 (OMB Number 2060–0330) to OMB for Review and Approval; Comment Request

AGENCY: Environmental Protection Agency (EPA).

ACTION: Notice.

SUMMARY: In compliance with the Paperwork Reduction Act (44 U.S.C. 3501 *et seq.*), this document announces that the following Information Collection Request (ICR) has been forwarded to the Office of Management and Budget (OMB) for review and approval: NESHAP for Shipbuilding and Ship Repair Facilities (Surface Coating) (40 CFR part 63, subpart II). This ICR describes the nature of the information collection and its estimated burden and cost.

DATES: Additional comments may be submitted on or before September 2, 2003.

ADDRESSES: Follow the detailed instructions under **SUPPLEMENTARY INFORMATION.**

FOR FURTHER INFORMATION CONTACT: Leonard Lazarus, Office of Compliance, Mail Code 2223A, Environmental Protection Agency, 1200 Pennsylvania Avenue, NW., Washington, DC 20460; telephone number: (202) 564–6369; fax number: (202) 564–0050; e-mail address: *lazarus.leonard@epa.gov*.

SUPPLEMENTARY INFORMATION: EPA has submitted the following ICR to OMB for review and approval according to the procedures prescribed in 5 CFR 1320.12. On September 26, 2002 (67 FR 60672), EPA sought comments on this ICR pursuant to 5 CFR 1320.8(d). EPA received no comments.

EPA has established a public docket for this ICR under Docket ID Number OECA–2003–0089, which is available for public viewing at the Enforcement and Compliance Docket and Information Center in the EPA Docket Center (EPA/DC), EPA West, Room B102, 1301 Constitution Avenue, NW., Washington, DC. The EPA Docket Center Public Reading Room is open from 8:30 a.m. to 4:30 p.m., Monday through Friday, excluding legal holidays. The telephone number for the Reading Room is (202) 566–1744, and the telephone number for the Enforcement and Compliance Docket and Information Center is (202) 566–1514. An electronic version of the public docket is available through EPA Dockets (EDOCKET) at *http://www.epa.gov/edocket.* Use EDOCKET to submit or view public comments, access the index listing of the contents of the public docket, and to access those documents in the public docket that are available electronically. When in the system, select ''search,'' then key in the docket ID number identified above.

Any comments related to this ICR should be submitted to OMB and EPA within 30 days of this notice, and according to the following detailed instructions: (1) Mail your comments to OMB at: Office of Information and Regulatory Affairs, Office of Management and Budget (OMB), Attention: Desk Officer for EPA, 725 17th Street, NW., Washington, DC 20503, and (2) submit your comments to EPA online using EDOCKET (our preferred method), by e-mail to *docket.oeca@epa.gov*, or by mail to: EPA Docket Center, Environmental Protection Agency, Mail Code: 2201T, 1200 Pennsylvania Avenue, NW., Washington, DC 20460.

EPA's policy is that public comments, whether submitted electronically or in paper, will be made available for public viewing in EDOCKET as EPA receives them and without change, unless the comment contains copyrighted material, Confidential Business Information (CBI), or other information whose public disclosure is restricted by statute. When EPA identifies a comment containing copyrighted material, EPA will provide a reference to that material in the version of the comment that is placed in EDOCKET. The entire printed comment, including copyrighted material, will be available in the public docket. Although identified as an item in the official docket, information claimed as CBI, or whose disclosure is otherwise restricted by statute, is not included in the official public docket, and will not be available for public viewing in EDOCKET. For further information about the electronic docket, see EPA's **Federal Register** notice describing the electronic docket at 67 FR 38102 (May 31, 2002), or go to *www.epa.gov/edocket*.

Title: NESHAP for Shipbuilding and Ship Repair Facilities (Surface Coating) (40 CFR part 63, subpart II) (OMB Control Number 2060–0330, EPA ICR Number 1712.04). This is a request to renew an existing approved collection that is scheduled to expire on August 31, 2003. Under OMB regulations, the Agency may continue to conduct or sponsor the collection of information while this submission is pending at OMB.

Abstract: The respondents are owners or operators of Shipbuilding and Ship Repair Facilities. Operations covered include: primer and top coat application in manufacturing processes and in ship repair processes. The NESHAP regulation 40 CFR part 63, subpart II, was promulgated on December 15, 1995. In order to ensure compliance with the standards adequate record keeping and reporting is necessary. In the absence of such information, enforcement personnel would be unable to determine whether the standards are being met on a continuous basis, as required by the Clean Air Act.

These standards rely on the reduction of Hazardous Air Pollutant (HAP) emissions by using coatings which comply with the volatile organic compound (VOC) limits set forth in this Maximum Achievable Control Technology (MACT) standard. In some cases, the control of emissions of HAP from surface coating at shipbuilding and repair facilities also requires the installation of properly designed equipment, and the operation and maintenance of that equipment. The required notifications are used to inform the Agency or delegated authority when a source becomes subject to the standard. The implementation plans from facilities are needed as these are the Agency's record of a source's initial capability to comply with the emission standard, and serve as a record of the operating conditions under which compliance was achieved. In addition, the semiannual reports are used for problem identification, as a check on source operation and maintenance, and for compliance determinations. Record keeping and reporting are mandatory under this regulation. Records must be maintained for 5 years.

An agency may not conduct or sponsor, and a person is not required to respond to, a collection of information unless it displays a currently valid OMB control number. The OMB control numbers for EPA's regulations are listed in 40 CFR part 9 and 48 CFR chapter 15, and are identified on the form and/or instrument, if applicable.

Burden Statement: The annual public reporting and recordkeeping burden for this collection of information is estimated to average 255 hours per response. Burden means the total time, effort, or financial resources expended by persons to generate, maintain, retain, or disclose or provide information to or for a Federal agency. This includes the time needed to review instructions; develop, acquire, install, and utilize technology and systems for the purposes of collecting, validating, and verifying information, processing and maintaining information, and disclosing and providing information; adjust the existing ways to comply with any previously applicable instructions and requirements; train personnel to be able to respond to a collection of information; search data sources; complete and review the collection of information; and transmit or otherwise disclose the information.

Respondents/Affected Entities: Owners/operators of shipbuilding and ship repair facilities.

Estimated Number of Respondents: 56.

Frequency of Response: Initial, semiannual.

Estimated Total Annual Hour Burden: 28,594 (rounded) hours.

Estimated Total Capital and Operations & Maintenance (O & M) Annual Costs: $0.

Changes in the Estimates: There is an increase of 6,445 hours in the total estimated burden currently identified in the OMB Inventory of Approved ICR Burdens. The adjustment increase in burden is due to more accurate estimates of existing and anticipated new sources, and an improved calculation of burden for the reporting requirements.

Dated: July 23, 2003.

Doreen Sterling,

Acting Director, Collection Strategies Division.

[FR Doc. 03–19501 Filed 7–30–03; 8:45 am]

BILLING CODE 6560–50–P

ENVIRONMENTAL PROTECTION AGENCY

[SFUND–2003–0003; FRL–7538–3]

Agency Information Collection Activities; Submission of EPA ICR No. 1428.06 (OMB No. 2050–0078) to OMB for Review and Approval; Comment Request

AGENCY: Environmental Protection Agency (EPA).

ACTION: Notice.

SUMMARY: In compliance with the Paperwork Reduction Act (44 U.S.C. 3501 *et seq.*), this document announces that the following Information Collection Request (ICR) has been forwarded to the Office of Management and Budget (OMB) for review and approval: Trade Secret Claims for Emergency Planning and Community Right-to-Know (EPCRA Section 322). This ICR describes the nature of the information collection and its estimated burden and cost.

DATES: Additional comments may be submitted on or before September 2, 2003.

ADDRESSES: Follow the detailed instructions in **SUPPLEMENTARY INFORMATION.**

FOR FURTHER INFORMATION CONTACT: Sicy Jacob, Chemical Emergency Preparedness and Prevention Office (CEPPO), OSWER, Mailcode 5104A, Environmental Protection Agency, 1200 Pennsylvania Ave., NW., Washington, DC 20460; telephone number: (202) 564–8019; fax number: (202) 564–8233; e-mail address: *jacob.sicy@epa.gov*.

SUPPLEMENTARY INFORMATION: EPA has submitted the following ICR to OMB for review and approval according to the procedures prescribed in 5 CFR 1320.12. On March 6, 2003 (68 FR 10721), EPA sought comments on this ICR pursuant to 5 CFR 1320.8(d). EPA did not receive any comments.

EPA has established a public docket for this ICR under Docket ID No. SFUND–2003–0003, which is available for public viewing at the Superfund Docket in the EPA Docket Center (EPA/DC), EPA West, Room B102, 1301 Constitution Ave., NW., Washington, DC. The EPA Docket Center Public Reading Room is open from 8:30 a.m. to 4:30 p.m., Monday through Friday, excluding legal holidays. The telephone number for the Reading Room is (202) 566–1744, and the telephone number for the Superfund Docket is (202) 566–0276. An electronic version of the public docket is available through EPA Dockets (EDOCKET) at *http://www.epa.gov/edocket*. Use EDOCKET to submit or view public comments, access the index listing of the contents of the public docket, and to access those documents in the public docket that are available electronically. Once in the system, select ''search,'' then key in the docket ID number identified above.

Any comments related to this ICR should be submitted to EPA and OMB within 30 days of this notice, and according to the following detailed instructions: (1) Submit your comments to EPA online using EDOCKET (our preferred method), by e-mail to *superfund.docket@epa.gov*, or by mail to: EPA Docket Center, Environmental Protection Agency, Superfund Docket, Mailcode 5202T, 1200 Pennsylvania Ave., NW., Washington, DC 20460, and (2) Mail your comments to OMB at: Office of Information and Regulatory Affairs, Office of Management and Budget (OMB), Attention: Desk Officer for EPA, 725 17th Street, NW., Washington, DC 20503.

EPA's policy is that public comments, whether submitted electronically or in paper, will be made available for public viewing in EDOCKET as EPA receives them and without change, unless the comment contains copyrighted material, CBI, or other information whose public disclosure is restricted by statute. When EPA identifies a comment containing copyrighted material, EPA will provide a reference to that material in the version of the comment that is placed in EDOCKET. The entire printed comment, including the copyrighted material, will be available in the public docket. Although identified as an item in the official docket, information claimed as CBI, or whose disclosure is otherwise restricted by statute, is not included in the official public docket, and will not be available for public viewing in EDOCKET. For further information about the electronic docket, see EPA's **Federal Register** notice describing the electronic docket at 67 FR 38102 (May 31, 2002), or go to *www.epa.gov/edocket*.

Title: Trade Secret Claims for Emergency Planning and Community Right-to-Know and Emergency Planning (EPCRA Section 322), (OMB Control Number 2050–0078, EPA ICR Number 1428.06). This is a request to renew an existing approved collection that is scheduled to expire on September 30, 2003. Under OMB regulations, the Agency may continue to conduct or sponsor the collection of information while this submission is pending at OMB.

Abstract: This information collection request pertains to trade secrecy claims submitted under section 322 of the

Emergency Planning and Community Right-to-Know Act of 1986 (EPCRA), also known as Title III of SARA, the Superfund Amendments and Reauthorization Act. Title III contains provisions requiring facilities to report to State and local authorities, and EPA, the presence, use and release of extremely hazardous substances (described in sections 302 and 304) and hazardous and toxic chemicals (described in sections 311, 312 and 313 respectively). Section 322 of Title III allows a facility to withhold the specific chemical identity from these Title III reports if the facility asserts a claim of trade secrecy for that chemical identity. The provision establishes the requirements and procedures that facilities must follow to request trade secrecy treatment of chemical identities, as well as the procedures for submitting public petitions to the Agency for review of the ''sufficiency'' of trade secrecy claims. EPA published the trade secrecy regulations on July 29, 1988 (58 FR 28772), codified in 40 CFR Part 350.

Trade secrecy protection is provided for specific chemical identities contained in reports submitted under each of the following Title III sections: (1) 303 (d)(2)—Facility notification of changes that have or are about to occur; (2) 303 (d)(3)—Local Emergency Planning Committee (LEPC) requests for facility information to develop or implement emergency plans; (3) 311—Material Safety Data Sheets (MSDSs) submitted by facilities, or lists of those chemicals submitted in place of the MSDSs; (4) 312—Tier II emergency and hazardous chemical inventory forms; and, (5) 313—Toxic chemical release inventory forms.

An agency may not conduct or sponsor, and a person is not required to respond to, a collection of information unless it displays a currently valid OMB control number. The OMB control numbers for EPA's regulations are listed in 40 CFR part 9 and 48 CFR chapter 15, and are identified on the form and/or instrument, if applicable.

Burden Statement: The annual public reporting and recordkeeping burden for this collection of information is estimated to average 10 hours per response. Burden means the total time, effort, or financial resources expended by persons to generate, maintain, retain, or disclose or provide information to or for a Federal agency. This includes the time needed to review instructions; develop, acquire, install, and utilize technology and systems for the purposes of collecting, validating, and verifying information, processing and maintaining information, and disclosing and providing information; adjust the existing ways to comply with any previously applicable instructions and requirements; train personnel to be able to respond to a collection of information; search data sources; complete and review the collection of information; and transmit or otherwise disclose the information.

Respondents/Affected Entities: Facilities that may want to claim trade secret for specific chemical identity contained in reports submitted under EPCRA sections 303(d)(2) and (d)(3), 311, 312, and 313; members of the general public submitting petitions for trade secrets claimed by facilities; and State governors or State Emergency Response Commissions and Health Professionals requesting facilities for information on the health effects of trade secret chemicals in non-emergency and preventative measure situations.

Estimated Number of Respondents: 357.

Frequency of Response: Annually.

Estimated Total Annual Hour Burden: 3,483 hours.

Estimated Total Annual Cost: $147,543. No capital or operation and maintenance costs are associated with any requirements in this ICR.

Changes in the Estimates: There is an increase of 362 hours in the total annual estimated burden currently identified in the OMB Inventory of Approved ICR Burdens. This is due to an increase in the number of claims submitted under sections 303(d)(2), (d)(3), 311 and 312 of EPCRA. Trade secret claims under section 313 have decreased from previous ICR.

Dated: July 23, 2003.

Doreen Sterling,

Acting Director, Collection Strategies Division.

[FR Doc. 03–19502 Filed 7–30–03; 8:45 am]

BILLING CODE 6560–50–P

ENVIRONMENTAL PROTECTION AGENCY

[OAR–2003–0018, FRL–7538–2]

Agency Information Collection Activities; Submission of EPA ICR No. 1626.08 (OMB No. 2060–0256) to OMB for Review and Approval; Comment Request

AGENCY: Environmental Protection Agency (EPA).

ACTION: Notice.

SUMMARY: In compliance with the Paperwork Reduction Act (44 U.S.C. 3501 *et seq.*), this document announces that the following Information Collection Request (ICR) has been forwarded to the Office of Management and Budget (OMB) for review and approval: National Refrigerant Recycling and Emissions Reduction Program. This ICR describes the nature of the information collection and its expected burden and cost.

DATES: Additional comments may be submitted on or before September 2, 2003.

ADDRESSES: Follow the detailed instructions in **SUPPLEMENTARY INFORMATION.**

FOR FURTHER INFORMATION CONTACT: Julius Banks, Global Programs Division, Office of Air and Radiation, Office of Atmospheric Programs; Mail Code 6205J; Environmental Protection Agency; 1200 Pennsylvania Ave., NW; Washington, DC 20460; telephone number: (202) 564–9870; fax number: (202) 565–2096; e-mail address: *banks.julius@epa.gov.*

SUPPLEMENTARY INFORMATION: EPA has submitted the following ICR to OMB for review and approval according to the procedures prescribed in 5 CFR 1320.12. On March 10, 2003 (68 *FR* 11389), EPA sought comments on this ICR pursuant to 5 CFR 1320.8(d). EPA received no comments.

EPA has established a public docket for this ICR under Docket ID No. OAR–2003–0018, which is available for public viewing at the Air and Radiation Docket and Information Center in the EPA Docket Center (EPA/DC), EPA West, Room B102, 1301 Constitution Ave., NW, Washington, DC. The EPA Docket Center Public Reading Room is open from 8:30 a.m. to 4:30 p.m., Monday through Friday, excluding legal holidays. The telephone number for the Reading Room is (202) 566–1744, and the telephone number for the Air and Radiation Docket and Information Center is (202) 566–1742. An electronic version of the public docket is available through EPA Dockets (EDOCKET) at: *http://www.epa.gov/edocket.* Use EDOCKET to submit or view public comments, access the index listing of the contents of the public docket, and to access those documents in the public docket that are available electronically. Once in the system, select ''search,'' then key in the docket ID number identified above.

Any comments related to this ICR should be submitted to OMB and EPA within 30 days of this notice, and according to the following detailed instructions: (1) Mail your comments to OMB at: Office of Information and Regulatory Affairs, Office of Management and Budget (OMB),

Attention: Desk Officer for EPA, 725 17th Street, NW, Washington, DC 20503, and (2) Submit your comments to EPA online using EDOCKET (our preferred method), by e-mail to: *a-and-r-Docket@epa.gov,* or by mail to: EPA Docket Center, Environmental Protection Agency, Air and Radiation Docket and Information Center (6102T), 1200 Pennsylvania Ave., NW, Washington, DC 20460.

EPA's policy is that public comments, whether submitted electronically or in paper, will be made available for public viewing in EDOCKET as EPA receives them and without change, unless the comment contains copyrighted material, confidential business information (CBI), or other information whose public disclosure is restricted by statute. When EPA identifies a comment containing copyrighted material, EPA will provide a reference to that material in the version of the comment that is placed in EDOCKET. The entire printed comment, including the copyrighted material, will be available in the public docket. Although identified as an item in the official docket, information claimed as CBI, or whose disclosure is otherwise restricted by statute, is not included in the official public docket, and will not be available for public viewing in EDOCKET. For further information about the electronic docket, see EPA's **Federal Register** notice describing the electronic docket at 67 FR 38102 (May 31, 2002), or go to *http://www.epa.gov/edocket.*

Title: National Refrigerant Recycling and Emissions Reduction Program (OMB Control Number 2060–0256, EPA ICR Number 1626.08). This is a request to renew an existing approved collection that is scheduled to expire on July 31, 2003. Under OMB regulations, the Agency may continue to conduct or sponsor the collection of information while this submission is pending at OMB.

Abstract: EPA has developed regulations under the Clean Air Act Amendments of 1990 (the Act) establishing standards and requirements regarding the use and disposal of class I and class II ozone-depleting substances used as refrigerants during the service, maintenance, repair, or disposal of refrigeration and air-conditioning equipment. Section 608(c) of the Act states that effective July 1, 1992, it is unlawful for any person in the course of maintaining, servicing, repairing, or disposing of refrigeration or air-conditioning equipment to knowingly vent or otherwise knowingly release or dispose of any class I or class II substance used as a refrigerant in the equipment in a manner which permits the substance to enter the environment.

During 1993, EPA promulgated regulations under section 608 of the Act for the recycling of ozone-depleting refrigerants recovered during the servicing and disposal of air-conditioning and refrigeration equipment. These regulations were published on May 14, 1993 (58 FR 28660) and codified in 40 CFR part 82, subpart F (82.150 *et seq.*).

The regulations require persons servicing refrigeration and air-conditioning equipment to observe certain service practices that reduce emissions of ozone depleting refrigerants. The regulations also establish certification programs for technicians, recycling and recovery equipment, and off-site refrigerant reclaimers. In addition, EPA requires that ozone depleting refrigerants contained ''in bulk'' in appliances be removed prior to disposal of the appliances and that all refrigeration and air-conditioning equipment, except for small appliances and room air conditioners, be provided with a servicing aperture that facilitates recovery of the refrigerant. Moreover, the Agency requires that substantial refrigerant leaks in equipment be repaired when they are discovered. These regulations significantly reduce emissions of ozone depleting refrigerants, and therefore aid U.S. and global efforts to minimize damage to the ozone layer and the environment as a whole.

To facilitate compliance with and enforcement of section 608 requirements, EPA requires reporting and record keeping requirements of technicians; technician certification programs; equipment testing organizations; refrigerant wholesalers and purchasers; refrigerant reclaimers; refrigeration and air-conditioning equipment owners; and other establishments that perform refrigerant removal, service, or disposal. The record keeping requirements and periodic submission of reports, to EPA's Office of Air and Radiation, Office of Atmospheric Programs, occur on an annual, biannual, onetime, or occasional basis depending on the nature of the reporting entity and the length of time that the entity has been in service. Specific reporting and record keeping requirements were published in 58 FR 28660 and codified under 40 CFR part 82, subpart F (82.166). These reporting and recordkeeping requirements also allow EPA to evaluate the effectiveness of the refrigerant regulations, and help the Agency determine if we are meeting the obligations of the United States, under the 1987 Montreal Protocol, to reduce use and emissions of ozone-depleting substances to the lowest achievable level.

An agency may not conduct or sponsor, and a person is not required to respond to, a collection of information unless it displays a currently valid OMB control number. The OMB control numbers for EPA's regulations are listed in 40 CFR part 9 and 48 CFR chapter 15, and are identified on the form and/or instrument, if applicable.

Burden Statement: The annual public reporting and recordkeeping burden for this collection of information is estimated to average: 18 hours for the two EPA-approved refrigerant recovery/recycling equipment testing organizations; 3,375 hours for an estimated 2,250 service establishments that will change ownership or enter the market; 375 hours for an estimated 375 disposal establishments that change ownership or enter the market; 67,500 hours for the maintenance of copies of signed statements by an estimated 7,500 disposal establishments; 20 hours for certification of an estimated 4 refrigerant reclaimers that change ownership or enter the market; 275 hours for reclaimer reporting from an estimated 55 respondents; 40,000 hours for an estimated 5,000 refrigerant wholesalers to maintain records of refrigerant sales transactions; 150 hours for an estimated 5 technician certification programs applying for first-time approval; 1,552 hours for 97 technician certification programs to maintain records; 90,000 hours for an estimated 30,000 technicians acquiring certification for the first time and maintaining certification cards; 6,000 hours for an estimated 300,000 previously certified technicians to maintain their certification cards; 56 hours for an estimated 10 owners of industrial process refrigeration equipment (appliances) who request a 30-day extension to the 30-day leak repair requirement or the retrofit requirement; 1,360 hours for an estimated 310 owners of industrial process refrigeration and commercial and comfort cooling equipment (appliances) who maintain information on purged/destroyed refrigerant that they wish to exclude from their leak rate calculations, records on the calculation of the full charge using a range, or plans to retire or retrofit their appliances.

Burden means the total time, effort, or financial resources expended by persons to generate, maintain, retain, or disclose or provide information to or for a Federal agency. This includes the time needed to review instructions; develop, acquire, install, and utilize technology

and systems for the purposes of collecting, validating, and verifying information, processing and maintaining information, and disclosing and providing information; adjust the existing ways to comply with any previously applicable instructions and requirements; train personnel to be able to respond to a collection of information; search data sources; complete and review the collection of information; and transmit or otherwise disclose the information.

Respondents/Affected Entities: Entities potentially regulated by this action are those that recover, recycle, reclaim, sell, or distribute in interstate commerce refrigerants that contain chlorofluorocarbons (CFCs) and/or hydrochlorofluorocarbons (HCFCs); and those that service, maintain, repair, or dispose of appliances containing CFC or HCFC-refrigerants. In addition, the owners or operators of appliances containing CFC or HCFC-refrigerants may be potentially regulated.

Estimated Number of Respondents: 345,608.

Frequency of Response: Reporting requirements under this rulemaking are primarily required on an annual basis, with the exception of technician testing organizations who are required to report biannually. The frequency of recordkeeping requirements under this rulemaking vary depending upon the actions of the respondent but are generally required on a transactional basis.

Estimated Total Annual Hour Burden: 210,681.

Estimated Total Annual Cost: $6,973,541, includes $0 annualized capital or O&M costs.

Changes in the Estimates: There is a decrease of 208,865 hours in the total estimated burden currently identified in the OMB Inventory of Approved ICR Burdens. This decrease is not due to a change in any program requirement. The adjustment is the result of changes in EPA's estimates of labor rates, time required to submit reports and maintain records, and the overall number of respondents.

Dated: July 22, 2003.

Doreen Sterling,

Acting Director, Collection Strategies Division.

[FR Doc. 03–19503 Filed 7–30–03; 8:45 am]

BILLING CODE 6560–50–P

ENVIRONMENTAL PROTECTION AGENCY

[OPPT–2002–0009; FRL–7313–5]

TSCA Chemical Testing; Receipt of Test Data

AGENCY: Environmental Protection Agency (EPA).

ACTION: Notice.

SUMMARY: This notice announces EPA's receipt of test data on dibasic esters (DBEs) (CAS Nos. 106–65–0, 627–93–0, and 1119–40–0). These data were submitted pursuant to an enforceable testing consent agreement (ECA)/Order issued by EPA under section 4 of the Toxic Substances Control Act (TSCA).

FOR FURTHER INFORMATION CONTACT: Barbara Cunningham, Director, Environmental Assistance Division (7408M), Office of Pollution Prevention and Toxics, Environmental Protection Agency, 1200 Pennsylvania Ave., NW., Washington, DC 20460–0001; telephone number: (202) 554–1404; e-mail address: *TSCA-Hotline@epa.gov*.

SUPPLEMENTARY INFORMATION:

I. General Information

A. Does this Action Apply to Me?

This action is directed to the public in general. This action may, however, be of interest to those persons who are concerned about data on health and/or environmental effects and other characteristics of this chemical. Since other entities may also be interested, the Agency has not attempted to describe all the specific entities that may be affected by this action. If you have any questions regarding the applicability of this action to a particular entity, consult the person listed under **FOR FURTHER INFORMATION CONTACT**.

B. How Can I Get Copies of this Document and Other Related Information?

1. *Docket.* EPA has established an official public docket for this action under docket identification (ID) number OPPT–2002–0009. The official public docket consists of the documents specifically referenced in this action, any public comments received, and other information related to this action. Although a part of the official docket, the public docket does not include Confidential Business Information (CBI) or other information whose disclosure is restricted by statute. The official public docket is the collection of materials that is available for public viewing at EPA's Docket Center, Rm. B102-Reading Room, EPA West, 1301 Constitution Ave., NW., Washington, DC. EPA's Docket Center is open from 8:30 a.m. to 4:30 p.m., Monday through Friday, excluding legal holidays. EPA's Docket Center Reading Room telephone number is (202) 566–1744 and the telephone number for the OPPT Docket, which is located in EPA Docket Center, is (202) 566–0280.

2. *Electronic access.* You may access this **Federal Register** document electronically through the EPA Internet under the ''**Federal Register**'' listings at *http://www.epa.gov/fedrgstr/*.

An electronic version of the public docket is available through EPA's electronic public docket and comment system, EPA Dockets. You may use EPA Dockets at *http://www.epa.gov/edocket/* to submit or view public comments, access the index listing of the contents of the official public docket, and to access those documents in the public docket that are available electronically. Although not all docket materials may be available electronically, you may still access any of the publicly available docket materials through the docket facility identified in Unit I.B.1. Once in the system, select ''search,'' then key in the appropriate docket ID number.

II. Test Data Submissions

Under 40 CFR 790.60, all TSCA section 4 ECAs/Orders must contain a statement that results of testing conducted pursuant to ECAs/Orders will be announced to the public in accordance with section 4(d) of TSCA.

Test data for DBEs were submitted by the DBE Group comprised of the following companies: Aceto Corporation, DuPont Textiles and Interiors (formally E.I. du Pont de Nemours and Company), and Solutia, Inc. These data were submitted pursuant to a TSCA section 4 ECA/Order and were received by EPA on April 1, 2003 and April 22, 2003. The submission includes a final report titled ''Dibasic Esters: *In vitro* Dermal Permeability Coefficients (Kp) in Rat and Human Skin (for each DBE and for a 1:3:1 blend of dimethyl succinate (DMS, CAS #106–65–0); dimethyl glutarate (DMG, CAS #1119–40–0); and dimethyl adipate (DMA, CAS #627–93–0).'' A second final report was received by EPA titled ''Dimethyl Glutarate (DMG, CAS #1119–40–0) Inhalation Developmental Toxicity Study in Rabbits.'' DBEs are component chemicals of solvent mixtures used in paint stripping formulations that are sold to the general public. Consumers can be significantly exposed to DBEs during use of these formulations.

EPA has initiated its review and evaluation process for this submission. At this time, the Agency is unable to

provide any determination as to the completeness of the submission.

Authority: 15 U.S.C. 2603.

List of Subjects

Environmental protection, Hazardous substances, Toxic substances.

Dated: June 23, 2003.

Philip S. Oshida,

Acting Director, Chemical Control Division, Office of Pollution Prevention and Toxics.

[FR Doc. 03–19500 Filed 7–30–03; 8:45 am]

BILLING CODE 6560–50–S

COUNCIL ON ENVIRONMENTAL QUALITY

White House Task Force on Energy Project Streamlining; Public Organization Meeting of the Proposed Rocky Mountain Energy Council

AGENCY: Council on Environmental Quality.

ACTION: Notice of meeting.

SUMMARY: The White House Task Force on Energy Project Streamlining will host a public meeting to solicit stakeholder input on the proposed formation of the Rocky Mountain Energy Council at the Sheraton Denver West hotel in Lakewood, Colorado.

DATES: Tuesday, August 26, 2003, from 8 a.m. to 12 p.m.

ADDRESSES: The Sheraton Denver West, 360 Union Boulevard, Lakewood, Colorado 80228, telephone (303) 987–2000.

FOR FURTHER INFORMATION CONTACT: Ms. Annette West at the White House Task Force on Energy Project Streamlining, 1000 Independence Avenue, WH–1, Washington, DC 20585; telephone (202) 586–3464; electronic mail at *annette.west@hq.doe.gov* (please note that Postal Service mail is delayed due to additional screening at the above address).

SUPPLEMENTARY INFORMATION: The proposed Rocky Mountain Energy Council is intended to be a State and Federal partnership that will allow a more effective management strategy for environmentally responsible renewable and nonrenewable energy production as well as cooperative development of energy policies on Federal and State public lands in the Rocky Mountain region. The Council will be responsible for fostering Federal/State partnerships and early collaboration for Federal and State Government decision-making on energy issues facing the Rocky Mountain region and the Nation. It is intended that the Council take a broader geographic and longer-term perspective on managing renewable and nonrenewable public energy resources, including their identification, production, and transmission to the market. The responsibility of the Council is to address and resolve issues affecting the environmentally responsible development of the valuable public energy resources.

State and Federal managers held a government to government planning and organization meeting on July 8–9, 2003. Participants included representatives from the States of Utah, Wyoming, Colorado, Montana, and those Federal Agencies with responsibilities for managing, authorizing, reviewing, consulting on, or certifying different aspects of energy projects on Federal lands. The objective of this meeting was to evaluate the benefits of creating a Rocky Mountain Energy Council (RMEC) and, if desired, determine what steps would be needed to organize and implement the RMEC. Participants agreed on the need for a Council to develop streamlined and forward-looking decision processes with respect to energy projects while preserving existing environmental protections.

Three functions for the RMEC were identified:

1. To develop Federal/State partnerships for the long-term management of renewable and nonrenewable energy resources on State and Federal public lands.

2. To allow more forward looking and strategic planning—on a regional basis—for the environmentally responsible development, production, and distribution of the Nation's valuable energy resources.

3. To develop processes for early collaboration and consultation among the State and Federal Agencies responsible for managing, authorizing, consulting on, reviewing, or certifying renewable and nonrenewable energy projects on public land.

Discussions at the July organizational meeting were largely exploratory, and focused on identifying impediments and possible solutions to the following issue areas: how to effectively foster Federal/State partnerships, processes for early collaboration, information sharing, decision processes, conflict resolution, and strategic planning. Issues identified included limited resources, conflicting agency mandates, regulatory and jurisdictional conflicts. A broad agreement was developed that this type of collaborative effort is necessary to address the cross cutting issues raised by energy development on public lands in the west.

The next step in the organizational process is to assure that the proposed Council has input from all interested stakeholders, including the public, industry, local organizations, and Tribal governments. The intent is to build upon the initial organizational discussions of the Council by collecting information and expectations from stakeholders, allowing a first official public meeting of the RMEC to be held by the end of 2003. The meeting is open to the public. Approximately 200 visitors can be accommodated on a first-come-first-served basis.

Upon request, interested parties may make oral or written presentations to the Federal and State managers. Such requests should be made no later than August 20, 2003, to Annette West. We request that oral statements be accompanied by a written summary of the statement to be made, which will be included in the minutes of the meeting. Please see the **FOR FURTHER INFORMATION CONTACT** section for the contact address and telephone number.

Minutes of the August 26, 2003, meeting will be available for public inspection and downloading at *http://www.etf.energy.gov* by September 26, 2003. Hard copies of the minutes can be requested at the **FOR FURTHER INFORMATION CONTACT** section above.

Dated: July 25, 2003.

James L. Connaughton,

Chairman, Council on Environmental Quality.

[FR Doc. 03–19471 Filed 7–30–03; 8:45 am]

BILLING CODE 3125–01–M

FEDERAL RESERVE SYSTEM

Formations of, Acquisitions by, and Mergers of Bank Holding Companies

The companies listed in this notice have applied to the Board for approval, pursuant to the Bank Holding Company Act of 1956 (12 U.S.C. 1841 *et seq.*) (BHC Act), Regulation Y (12 CFR Part 225), and all other applicable statutes and regulations to become a bank holding company and/or to acquire the assets or the ownership of, control of, or the power to vote shares of a bank or bank holding company and all of the banks and nonbanking companies owned by the bank holding company, including the companies listed below.

The applications listed below, as well as other related filings required by the Board, are available for immediate inspection at the Federal Reserve Bank indicated. The application also will be available for inspection at the offices of the Board of Governors. Interested

persons may express their views in writing on the standards enumerated in the BHC Act (12 U.S.C. 1842(c)). If the proposal also involves the acquisition of a nonbanking company, the review also includes whether the acquisition of the nonbanking company complies with the standards in section 4 of the BHC Act (12 U.S.C. 1843). Unless otherwise noted, nonbanking activities will be conducted throughout the United States. Additional information on all bank holding companies may be obtained from the National Information Center website at www.ffiec.gov/nic/.

Unless otherwise noted, comments regarding each of these applications must be received at the Reserve Bank indicated or the offices of the Board of Governors not later than August 25, 2003.

A. Federal Reserve Bank of Boston (Richard Walker, Community Affairs Officer) 600 Atlantic Avenue, Boston, Massachusetts 02106-2204:

1. The Siwooganock Holding Company, Inc., Lancaster, New Hampshire; to become a bank holding company by acquiring 100 percent of the voting shares of The Siwooganock Bank, Lancaster, New Hampshire.

In connection with this application, Applicant also has applied to acquire 10 percent of the voting shares of Lancaster National Bank, Lancaster, New Hampshire.

Board of Governors of the Federal Reserve System, July 25, 2003.

Jennifer J. Johnson,

Secretary of the Board.

[FR Doc. 03–19461 Filed 7–30–03; 8:45 am]

BILLING CODE 6210–01–S

DEPARTMENT OF HEALTH AND HUMAN SERVICES

Agency for Healthcare Research and Quality; Notice of Meetings

In accordance with section 10(d) of the Federal Advisory Committee Act (5 U.S.C., Appendix 2), announcement is made of a Health Care Policy and Research Special Emphasis Panel (SEP) meetings.

A Special Emphasis is a group of experts in fields related to health care research who are invited by the Agency for Healthcare Research and Quality (AHRQ), and agree to be available, to conduct on an as needed basis, scientific reviews of applications for AHRQ support. Individual members of the Panel do not attend regularly-scheduled meetings and do not serve for fixed terms or a long period of time. Rather, they are asked to participate in particular review meetings which require their type of expertise.

Substantial segments of the upcoming SEP meetings listed below will be closed to the public in accordance with the Federal Advisory Committee Act, section 10(d) of 5 U.S.C., Appendix 2 and 5 U.S.C. 552b(c)(6). Grant applications are to be reviewed and discussed at these meetings. These discussions are likely to reveal personal information concerning individuals associated with the applications. This information is exempt from mandatory disclosure under the above-cited statutes.

1. SEP Meeting on: Limited Competition for AHRQ Research Infrastructure and Capacity Program: Phase II (BRIC).

Date: August 18, 2003 (open on August 18 from 8 a.m. to 8:15 a.m. and closed for the remainder of the meeting).

Place: Quality Suites and Conference Center, 3 Research Court, Rockville, MD 20850.

2. SEP Meeting on: Coordinating Center for the AHRQ Centers for Education and Research on Therapeutics Program and Limited Competition for AHRQ Centers for Education and Research on Therapeutics Program (CERTS).

Date: August 29, 2003 (open on August 29 from 8 a.m. to 8:15 a.m. and closed for the remainder of the meeting).

Place: Quality Suites and Conference Center, 3 Research Court, Rockville, MD 20850.

3. SEP Meeting on: Building the Evidence to Promote Bioterrorism and Other Public Health Emergency Preparedness in Health Care Systems.

Date: September 4–5, 2003 (open on September 4 from 8 a.m. to 8:15 a.m. and closed for the remainder of the meeting).

Place: Quality Suites and Conference Center, 3 Research Court, Rockville, MD 20850.

4. SEP Meeting on: Safe Practices Implementation Challenge Grants.

Date: September 4–5, 2003 (open on September 4 from 8 a.m. to 8:15 a.m. and closed for the remainder of the meeting).

Place: Quality Suites and Conference Center, 3 Research Court, Rockville, MD 20850.

5. SEP Meeting on: Small Research Grants for Primary Care Practice-Based Research Networks (PBRNs).

Date: September 11–12, 2003 (open on September 4 from 8 a.m. to 8:15 a.m. and closed for the remainder of the meeting).

Place: Quality Suites and Conference Center, 3 Research Court, Rockville, MD 20850.

Contact Person: Anyone wishing to obtain a roster of members, agenda or minutes of the nonconfidential portions of these meetings should contact Mrs. Bonnie Campbell, Committee Management Officer, Office of Extramural Research, Education, and Priority Populations, AHRQ, 540 Gaither Road, Room 2038, Rockville, Maryland 20850, Telephone (301) 427–1554.

Agenda items for these meetings are subject to change as priorities dictate.

Dated: July 24, 2003.

Carolyn M. Clancy,

Director.

[FR Doc. 03–19463 Filed 7–30–03; 8:45 am]

BILLING CODE 4160–90–M

DEPARTMENT OF HEALTH AND HUMAN SERVICES

Health Resources and Services Administration

Delegation of Authority

Notice is hereby given that I have delegated to the Administrator, Health Resources and Services Administration (HRSA), authority vested in the Secretary of Health and Human Services under the Smallpox Emergency Personnel Protection Act of 2003 (Pub. L. 108–20), enacting the following authority: Part C, title II of the Public Health Service Act, as amended.

This delegation shall be exercised under the Department's existing delegation of authority and policy on regulations

This delegation is effective upon signature. In addition, I hereby affirm and ratify any actions taken by the HRSA Administrator or other HRSA officials, which involved the exercise of this authority prior to the effective date of the delegation.

Dated: July 10, 2003.

Tommy G. Thompson,

Secretary.

[FR Doc. 03–19513 Filed 7–30–03; 8:45 am]

BILLING CODE 4165–15–M

DEPARTMENT OF HEALTH AND HUMAN SERVICES

Agency for Healthcare Research and Quality

Request for Additional Hospital CAHPS® (HCAHPS) Test Sites

AGENCY: Agency for Healthcare Research and Quality (AHRQ), HHS.

ACTION: Notice of Request.

SUMMARY: The Agency for Healthcare Research and Quality (AHRQ) in partnership with the Centers for Medicare and Medicaid Services (CMS) is soliciting volunteer sites for the additional testing of a draft Hospital CAHPS (HCAHPS) instrument. The mutual goals of AHRQ and CMS are to develop a standardized survey that is reliable and valid, that will reside in the public domain, and that will make comparative non-identifiable

information on hospital patients' perspectives on care widely available. While there are many good survey tools available to hospitals, there is currently no nationally used or universally accepted survey instrument that allows comparisons across all hospitals. To this end, at the request of CMS, AHRQ and the CAHPS®II grantees developed a draft HCAHPS instrument with input from the various stakeholders in the industry. Initial testing of the survey is being done as part of a CMS three-State pilot by hospitals in Arizona, Maryland, and New York.

On June 27th, 2003, CMS published a Federal Register Notice (vol. 68, no. 124, pages 38346–38358) soliciting input into implementation options and the draft HCAHPS survey. To take advantage of the input received, AHRQ and CMS are interested in conducting additional testing of the HCAHPS instrument, sampling and data collection processes to assess issues involved in survey implementation. To accomplish these tasks we plan to conduct very quickly, additional testing at a limited number of hospitals that volunteer to work with AHRQ and CMS. This notice describes an opportunity for volunteering for additional testing for refining the HCAHPS survey and the nature of the implementation procedures. Most of this additional testing will occur between September and December 2003.

This is a separate initiative from ''The Quality Initiative: A Public Resource on Hospital Performance''. (For more information about that initiative, please see the Supplemental Information section of this notice).

Types of Studies To Be Conducted During Additional Testing

A. Survey Method Issues

The following are some examples of the type of Methodological studies that AHRQ and CMS would like to conduct. These will be finalized once we have received public input at the close of the comment period for the June 27th **Federal Register** Notice.

1. Test of mode effects (mail versus telephone) within hospitals using randomly assigned split samples. Because HCAHPS, when finally implemented, may be fielded in by both mail and telephone it is important to test and revise the instrument so that there is comparability across these modes.

2. Test the effect of intervening stays in other facilities. A proportion of patients will be discharged from the hospital in question to another facility before they go home. It is important to test the effect of intervening stays in other facilities on HCAHPS scores for the acute care hospital from which the patient was sampled.

3. Psychometric analyses to evaluate the equivalence of English and the Spanish HCAHPS forms.

4. Test the effect of lag time on HCAHPS scale scores. Due to logistical delays in obtaining up-to-date discharge lists, there will almost certainly be a lag between hospital discharge and survey administration. Long time lags between discharge and survey administration may bias survey responses. For example, time since discharge may affect the survey scores because respondents' memories of their experience degrade with time or because the composition of the respondent pool changes with time (the less healthy patients may be less likely to respond or can not respond because they are too ill or have expired).

5. Test the effect on response rate of different survey materials, taking into account incremental changes in cost. There is some evidence in the survey research literature that response rate can be influenced by the type of survey materials that are sent out. In general impersonal materials from lower status sources will result in lower response rates than personalized materials sent out by higher status sources. However, personalized materials may cost more to produce.

6. Evaluate the covariation of HCAHPS scores with clinical indicators of hospital performance, such as those required by CMS in the 7th scope of work for Quality Improvement Organizations (QIOs) *i.e., see www.cms.gov* for more information on QIOs and the 7th scope of work statement. These analyses would constitute an expansion of the construct validity analyses for HCAHPS scores in the CMS Pilot.

7. Evaluate HCAHPS instrument psychometrically including the following characteristics:

- Quality of item responses (missing item rates, skip pattern errors);
- Factors associated with item response rates;
- Factors associated with survey response rates;
- Construct validity of composites and ratings;
- Internal consistency;
- Hospital level reliability;
- Components of variance; and
- Case mix adjustment.

B. Implementation Issues

AHRQ and CMS also seek to study the processes for implementation of HCAHPS. Topics include:

1. Sampling procedures that worked well or caused problems.

2. Survey operations procedures that worked well or caused problems.

3. How easily or readily can HCAHPS be integrated into a hospital's existing sampling and survey operations procedures.

Criteria for Additional Site Selection

While AHRQ and CMS would like to provide wide access to the survey for testing, there are limited agency resources for coordinating the testing and analysis of data. Therefore, it is necessary to seek volunteer acute care sites that are able to provide the resources for data collection using the HCAHPS survey, and agree to submit the data to a central repository for analysis. Hospitals may volunteer to participate in the testing program individually or in a group in cooperation with a hospital association, chain or other coalition. Potential testing sites will be selected that best meet the analytic needs of the HCAHPS development effort. Thus, selection from among potential candidate sites will be made using the practical criteria set out below. Criteria for selection of the additional sites are designed to achieve additional diversity in the characteristics of test sites, obtain the most reliable and valid data possible, and to maximize the use of resources allotted for this work.

The criteria for selection are as follows. The test site must:

1. Be able to pay the full cost of data collection and database creation using specifications provided by AHRQ;

2. Be able to field the survey within the timeframe specified by AHRQ to be determined at the time of selection (Most of the testing will occur between September and December 2003, but additional testing may be done in early 2004. Applicants should indicate their ability to carry out the work during those periods in response to Information Item 12 below);

3. Employ a survey vendor with an established record of hospital patient survey experience;

4. Be able to provide an adequate sample size to meet the needs of analyses;

5. Be able to adapt survey implementation as requested by AHRQ, to meet the needs of the experimental design; and

6. Be able to provide a person to coordinate the test site work with AHRQ.

Selection of additional test sites will be determined at the sole discretion of the AHRQ and CMS.

Information Requirements: To volunteer to participate as an additional testing site, please provide the following information:

1. Volunteer site9s) name(s) and location(s).
2. Contact person information including name and title, address, telephone number, fax number and e-mail address.
3. Coordinator for site data collection information (if different from contact person) including name and title, address, telephone number, fax number and e-mail address.
4. The following are examples of the types of studies that may be useful. Additional ones may be identified as a result of the June 27th Federal Register Notice. Please provide information about what types of studies you will or will not be willing to participate in.
a. Test of mode effects (mail versus telephone).
b. Test the effect of intervening stays in other facilities.
c. Psychometric analyses to evaluate the equivalence of English and Spanish HCAHPS forms.
d. Test the effect of lag time on HCAHPS scale scores.
e. Test the effect on response rate of different survey materials (*e.g.,* personalized cover letters), taking into account incremental changes in cost.
f. Evaluate the covariation of HCAHPS scores with clinical indicators of hospital performance.
g. Evaluate HCAHPS instrument psychometrically.
h. Sampling procedures that worked well or caused problems.
i. Survey operations procedures that worked well or caused problems.
j. How easily or readily HCAHPS is integrated into a hospital's existing sampling and survey operations procedures.
5. Number of hospitals proposed for inclusion in the testing.
6. Evidence that hospital(s) is/are willing to participate (*i.e.,* acknowledgement or confirmation from CEO).
7. Average number of discharges per month from participating hospitals, and the average number of discharges for each of the following services: medical, surgical, and obstetrics.
8. Name of current surveys being used in the site and modes of administration of each survey used.
9. Name of current survey vendors working with the site(s).
10. Name of survey vendor who has the largest share of the hospital market in which the volunteer facility, organization or association operates.
11. Statement or affidavit indicating authorization to commit the organization(s) to pay the specific estimated cost of sample selection, data collection, database preparation and coordination with AHRQ.
12. Current schedule for data collection of patient survey data, if you have one.
13. Process and schedule for selecting a vendor for the proposed testing or name of vendor already selected.

DATES: Please submit requested information on or before September 2, 2003.

ADDRESSES: Submissions should include a brief cover letter and the requested information about the potential site(s). They may be in the form of an e-mail with attachments, or a letter, preferably with an electronic file in a standard word processing format, (*e.g.,* Microsoft Word or Word Perfect) on a 3½ inch diskette. E-mail submissions are preferred and will be acknowledged upon receipt.

E-mail Responses to this request should be submitted to: *hospital-cahps@ahrq.gov.* Written or faxed responses should be submitted to:

Charles Darby, Agency for Healthcare Research and Quality, Center for Quality Improvement @ Patient Safety, 540 Gaither Road, Rockville, MD 20850. Phone: (301) 427–1324; Fax: (301) 427–1341.

In order to facilitate handling of submissions, please include all requested information about the candidate facilities. Please do not use acronyms. Electronic submissions are strongly encouraged.

FOR FURTHER INFORMATION CONTACT: Charles Darby, Center for Quality Improvement and Patient Safety, Agency for Healthcare Research and Quality; Phone: (301) 427–1324; Fax: (301) 427–1341; E-mail *cdarby@ahrq.gov.*

SUPPLEMENTARY INFORMATION: The Agency for Healthcare Research and Quality (AHRQ) has been a leading proponent and supporter of the development of instruments for measuring patient experiences within the healhcare system of the United States. Through prior CAHPS® patient survey development efforts, AHRQ has been able to provide valuable information to consumers and purchasers alike. The CAHPS survey for health plans is widely accepted as an industry standard. Therefore, as the research partner of CMS, AHRQ is charged with the development of a hospital patient experience of care instrument as well as the development of reporting strategies to maximize the utility of the survey results. In an effort to provide a firm foundation of evidence-based research for the HCAHPS instrument, the AHRQ is requesting voluntary participation from acute care facilities as potential sites for additional field-testing of the draft HCAHPS survey instrument to provide analytic data that will complement the results of the pilot testing done by QIOs for CMS.

Once HCAHPS is finalized, it will be made available to ''The Quality Initiative: A Public Resource on Hospital Performance'', which is a public/private partnership that includes the major hospital associations, government, consumer groups, measurement and accrediting bodies, and other stakeholders interested in reporting on hospital quality. In the first phase of the partnership (which has already begun), hospitals are voluntarily reporting the results of their performance on ten clinical quality measures for three medical conditions: acute myocardial infarction, heart failure, and pneumonia. HCAHPS reporting will comprise the second phase of the effort.

For more information or to participate in the Quality Initiative please visit *http://www.aha.org* under ''Quality and Patient Safety, Quality Initiative,'' or at *http://www.fah.org,* under ''Issues/Advisories,'' or at *http://www.aamc.org* by going to ''Government Affairs,'' ''Teaching Hospitals'' and then ''Quality.''

Dated: July 24, 2003.

Carolyn M. Clancy,

Director.

[FR Doc. 03–19462 Filed 7–30–03; 8:45 am]

BILLING CODE 4160–90–M

DEPARTMENT OF HEALTH AND HUMAN SERVICES

Agency for Healthcare Research and Quality Contract Review Meeting

In accordance with section 10(a) of the Federal Advisory Committee Act as amended (5 U.S.C., Appendix 2), announcement is made of an Agency for Healthcare Research and Quality (AHRQ) Technical Review Committee (TRC) meeting. This TRC's charge is to review contract proposals and provide recommendations to the Director, AHRQ, with respect to the technical merit of proposals submitted in response to a Request for Proposals (RFP) regarding ''Communications Support''. The RFP was published in the Federal Business Opportunities on June 3, 2003.

The upcoming TRC meeting will be closed to the public in accordance with

the Federal Advisory Committee Act (FACA), section 10(d) of 5 U.S.C., Appendix 2, implementing regulations, and procurement regulations, 41 CFR 101–6.1023 and 48 CFR 315.604(d). The discussions at this meeting of contract proposals submitted in response to the above-referenced RFP are likely to reveal proprietary information and personal information concerning individuals associated with the proposals. Such information is exempt from disclosure under the above-cited FACA provision and procurement rules that protect the free exchange of candid views and facilitate Department and Committee operations.

Name of TRC: The Agency for Healthcare Research and Quality-''Communications Support''.

Date: August 18, 2003 (Closed to the public).

Place: Agency for Healthcare Research & Quality, 540 Gaither Road, Conference Room 1, Rockville, Maryland 20850.

Contact Person: Anyone wishing to obtain information regarding this meeting should contact Kevin Murray, Office of Communications and Knowledge Transfer, Agency for Healthcare Research and Quality, 540 Gaither Road, Rockville, Maryland, 20850, 301–427–1853.

Dated: July 23, 2003

Carolyn M. Clancy,

Director.

[FR Doc. 03–19539 Filed 7–30–03; 8:45 am]

BILLING CODE 4160–90–M

DEPARTMENT OF HEALTH AND HUMAN SERVICES

Centers for Disease Control and Prevention

Disease, Disability, and Injury Prevention and Control Special Emphasis Panel (SEP): Evaluation of Web-Based HIV Risk Behavior Surveillance Among Men Who Have Sex With Men, Program Announcement Number 03095

In accordance with section 10(a)(2) of the Federal Advisory Committee Act (Pub. L. 92–463), the Centers for Disease Control and Prevention (CDC) announces the following meeting:

Name: Disease, Disability, and Injury Prevention and Control Special Emphasis Panel (SEP): Evaluation of Web-Based HIV Risk Behavior Surveillance Among Men Who Have Sex With Men, Program Announcement Number 03095.

Times and Dates: 7 p.m.–8 p.m., August 20, 2003 (Open), 8 a.m.–08:30 a.m., August 21, 2003 (Open), 8:30 a.m.–5 p.m., August 21, 2003 (Closed).

Place: The Westin Atlanta Airport Hotel, 4736 Best Road, Atlanta, GA 30337, Telephone 404.762.7676.

Status: Portions of the meeting will be closed to the public in accordance with provisions set forth in section 552b(c) (4) and (6), Title 5 U.S.C., and the Determination of the Director, Management Analysis and Services Office, CDC, pursuant to Public Law 92–463.

Matters to be Discussed: The meeting will include the review, discussion, and evaluation of applications received in response to Program Announcement Number 03095.

Contact Person for More Information: Beth Wolfe, Prevention Support Office, National Center for HIV, STD, and TB Prevention, CDC, 1600 Clifton Road, NE, MS–E07, Atlanta, GA 30333, Telephone 404.639.8531.

The Director, Management Analysis and Services Office, has been delegated the authority to sign Federal Register notices pertaining to announcements of meetings and other committee management activities, for both CDC and the Agency for Toxic Substances and Disease Registry.

Dated: July 23, 2003.

Alvin Hall,

Director, Management Analysis and Services Office, Centers for Disease Control and Prevention (CDC).

[FR Doc. 03–19480 Filed 7–30–03; 8:45 am]

BILLING CODE 4163–18–P

DEPARTMENT OF HEALTH AND HUMAN SERVICES

Administration for Children and Families

[Program Announcement No. ACYF/HS–2003–15]

Fiscal Year 2003 Discretionary Announcement for Head Start Partnerships With Historically Black Colleges and Universities; Availability of Funds and Requests for Applications; Corrections

AGENCY: Administration for Children and Families (ACF), HHS.

ACTION: Correction Notice for Head Start Historically Black Colleges and Universities Program Announcement No. ACYF/HHS–2003–15

SUMMARY: The is a correction notice for the Head Start Historically Black Colleges and Universities funding notice FR Doc 03–18165 that was published on July 21, 2003 (68 FR 43113). The document contained incorrect due dates for receipt of applications.

FOR FURTHER INFORMATION CONTACT: The Head Start Discretionary Grant Support Team (1–800–351–2293) is available to answer questions concerning application requirements and to refer you to the appropriate contact person in ACYF for programmatic questions. You may e-mail your questions to : *HSB@esilsg.org.* When contacting ACYF directly with programmatic questions please send to William F. Wilson, Grants Officer 330 C Street, SW., Washington, DC 20447, (202) 205–8913, *wwilson@acf.hhs.gov.* In order necessary, if you plan to submit an application you are requested to send a post card or call with the following information: the name, address, telephone and fax numbers, and e-mail addresses of the college/university at least four weeks prior to the submission deadline date to: ACYF Operations Center, Historically Black Colleges and Universities, 1150 Connecticut Avenue, NW., Suite 1100, Washington DC 20036, Telephone: 1–800–351–2293, e-mail: *HSB@esilsg.org.* An application kit including the necessary application forms and appendices can be obtained by contacting the above address, and/or visiting the ACYF Web site at: *http://www.acf.hhs.gov/programs/hsb/grant/fundingopportunities/fundopport.htm.*

Correction: In the **Federal Register** of July 21, 2003 in FR Doc 03–18165, on page 43119 the due date for receipt of applications is August 20, 2003. Please use this deadline date for submissions of applications for funding opportunities available for the FY '03 Head Start Historically Black Colleges and Universities program.

Dated: July 25, 2003.

Joan E. Ohl,

Commissioner, Administration on Children, Youth and Families.

[FR Doc. 03–19456 Filed 7–23–03; 8:45 am]

BILLING CODE 4184–01–P

DEPARTMENT OF HEALTH AND HUMAN SERVICES

Food and Drug Administration

[Docket No. 2002E–0339]

Determination of Regulatory Review Period for Purposes of Patent Extension; BENICAR

AGENCY: Food and Drug Administration, HHS.

ACTION: Notice.

SUMMARY: The Food and Drug Administration (FDA) has determined the regulatory review period for BENICAR and is publishing this notice of that determination as required by law. FDA has made the determination because of the submission of an application to the Director of Patents and Trademarks, Department of Commerce, for the extension of a patent that claims that human drug product.

ADDRESSES: Submit written comments and petitions to the Division of Dockets Management (HFA–305), Food and Drug Administration, 5630 Fishers Lane, rm. 1061, Rockville, MD 20852. Submit electronic comments to *http://www.fda.gov/dockets/ecomments*.

FOR FURTHER INFORMATION CONTACT: Claudia Grillo, Office of Regulatory Policy (HFD–013), Food and Drug Administration, 5600 Fishers Lane, Rockville, MD 20857, 301–827–3460.

SUPPLEMENTARY INFORMATION: The Drug Price Competition and Patent Term Restoration Act of 1984 (Public Law 98–417) and the Generic Animal Drug and Patent Term Restoration Act (Public Law 100–670) generally provide that a patent may be extended for a period of up to 5 years so long as the patented item (human drug product, animal drug product, medical device, food additive, or color additive) was subject to regulatory review by FDA before the item was marketed. Under these acts, a product's regulatory review period forms the basis for determining the amount of extension an applicant may receive.

A regulatory review period consists of two periods of time: A testing phase and an approval phase. For human drug products, the testing phase begins when the exemption to permit the clinical investigations of the drug becomes effective and runs until the approval phase begins. The approval phase starts with the initial submission of an application to market the human drug product and continues until FDA grants permission to market the drug product. Although only a portion of a regulatory review period may count toward the actual amount of extension that the Director of Patents and Trademarks may award (for example, half the testing phase must be subtracted, as well as any time that may have occurred before the patent was issued), FDA's determination of the length of a regulatory review period for a human drug product will include all of the testing phase and approval phase as specified in 35 U.S.C. 156(g)(1)(B).

FDA recently approved for marketing the human drug product BENICAR (olmesartan medocomil). BENICAR is indicated for the treatment of hypertension. Subsequent to this approval, the Patent and Trademark Office received a patent term restoration application for BENICAR (U.S. Patent No. 5,616,599) from Sankyo Company, Ltd., and the Patent and Trademark Office requested FDA's assistance in determining this patent's eligibility for patent term restoration. In a letter dated December 30, 2002, FDA advised the Patent and Trademark Office that this human drug product had undergone a regulatory review period and that the approval of BENICAR represented the first permitted commercial marketing or use of the product. Shortly thereafter, the Patent and Trademark Office requested that FDA determine the product's regulatory review period.

FDA has determined that the applicable regulatory review period for BENICAR is 2,522 days. Of this time, 1,882 days occurred during the testing phase of the regulatory review period, while 640 days occurred during the approval phase. These periods of time were derived from the following dates:

1. *The date an exemption under section 505(i) of the Federal Food, Drug, and Cosmetic Act (the act) (21 U.S.C. 355)(i) became effective*: June 1, 1995. The applicant claims May 2, 1995, as the date the investigational new drug application (IND) became effective. However, FDA records indicate that the IND effective date was June 1, 1995, which was 30 days after FDA receipt of the IND.

2. T*he date the application was initially submitted with respect to the human drug product under section 505(b) of the act*: July 25, 2000. FDA has verified the applicant's claim that the new drug application (NDA) for BENICAR (NDA 21–286) was initially submitted on July 25, 2000.

3. *The date the application was approved*: April 25, 2002. FDA has verified the applicant's claim that NDA 21–286 was approved on April 25, 2002.

This determination of the regulatory review period establishes the maximum potential length of a patent extension. However, the U.S. Patent and Trademark Office applies several statutory limitations in its calculations of the actual period for patent extension. In its application for patent extension, this applicant seeks 756 days of patent term extension.

Anyone with knowledge that any of the dates as published are incorrect may submit to the Division of Dockets Management (see **ADDRESSES**) written or electronic comments and ask for a redetermination by September 29, 2003. Furthermore, any interested person may petition FDA for a determination regarding whether the applicant for extension acted with due diligence during the regulatory review period by January 27, 2004. To meet its burden, the petition must contain sufficient facts to merit an FDA investigation. (See H. Rept. 857, part 1, 98th Cong., 2d sess., pp. 41–42, 1984.) Petitions should be in the format specified in 21 CFR 10.30.

Comments and petitions should be submitted to the Division of Dockets Management. Three copies of any mailed information are to be submitted, except that individuals may submit one copy. Comment are to be identified with the docket number found in brackets in the heading of this document. Comments and petitions may be seen in the Division of Dockets Management between 9 a.m. and 4 p.m., Monday through Friday.

Dated: July 14, 2003.

Jane A. Axelrad,

Associate Director for Policy, Center for Drug Evaluation and Research.

[FR Doc. 03–19446 Filed 7–30–03; 8:45 am]

BILLING CODE 4160–01–S

DEPARTMENT OF HEALTH AND HUMAN SERVICES

Food and Drug Administration

[Docket No. 2003N–0294]

Anesthetic and Life Support Drugs Advisory Committee; Notice of Meeting

AGENCY: Food and Drug Administration, HHS.

ACTION: Notice.

This notice announces a forthcoming meeting of a public advisory committee of the Food and Drug Administration (FDA). The meeting will be open to the public.

Name of Committee: Anesthetic and Life Support Drugs Advisory Committee.

General Function of the Committee: To provide advice and recommendations to the agency on FDA's regulatory issues.

Date and Time: The meeting will be held on September 9 and 10, 2003, from 8 a.m. to 5 p.m. Interested persons and organizations may submit written or electronic comments until October 10, 2003, to the Division of Dockets Management (*see* **ADDRESSES**).

Addresses: Electronic comments should be submitted to *http://www.fda.gov/dockets/ecomments.* Select ''2003N–0294—Opiate Risk Management'' and follow the prompts to submit your statement. Written comments should be submitted to the Division of Dockets Management (HFA–305), Food and Drug Administration, 5630 Fishers Lane, rm. 1061, Rockville, MD 20852.

Location: Holiday Inn, Versailles Ballrooms, 8120 Wisconsin Ave., Bethesda, MD.

Contact Person: Johanna M. Clifford, Center for Drug Evaluation and Research (HFD–21), Food and Drug Administration, 5600 Fishers Lane (for express delivery, 5630 Fishers Lane, rm.

1093), Rockville, MD 20857, 301–827–7001, or e-mail: *cliffordj@cder.fda.gov*, or FDA Advisory Committee Information Line, 1–800–741–8138 (301–443–0572 in the Washington, DC area), code 12529. Please call the Information Line for up-to-date information on this meeting.

Agenda: On September 9, 2003, the committee will discuss Risk Management Plans for opiate analgesic drug products with particular attention to modified-release products. On September 10, 2003, the committee will discuss the abuse liability of and Risk Management Plans for Palladone, a modified-release hydromorphone drug product indicated for the treatment of moderate to severe pain in opioid tolerant patients.

Procedure: Interested persons may present data, information, or views, orally or in writing, on issues pending before the committee. Written submissions may be made to the contact person by September 2, 2003. Oral presentations from the public will be scheduled between approximately 1:15 p.m. and 1:45 p.m. on September 9, and between 11:30 a.m. and 12 noon on September 10, 2003. Time allotted for each presentation may be limited. Those desiring to make formal oral presentations should notify the contact person before September 2, 2003, and submit a brief statement of the general nature of the evidence or arguments they wish to present, the names and addresses of proposed participants, and an indication of the approximate time requested to make their presentation.

Persons attending FDA's advisory committee meetings are advised that the agency is not responsible for providing access to electrical outlets.

FDA welcomes the attendance of the public at its advisory committee meetings and will make every effort to accommodate persons with physical disabilities or special needs. If you require special accommodations due to a disability, please contact Angie Whitacre at 301–827–7001 at least 7 days in advance of the meeting.

Notice of this meeting is given under the Federal Advisory Committee Act (5 U.S.C. app. 2).

Dated: July 23, 2003.

Peter J. Pitts,

Associate Commissioner for External Relations.

[FR Doc. 03–19506 Filed 7–30–03; 8:45 am]

BILLING CODE 4160–01–S

DEPARTMENT OF HEALTH AND HUMAN SERVICES

Food and Drug Administration

Additives and Ingredients Subcommittee of the Food Advisory Committee; Notice of Meeting

AGENCY: Food and Drug Administration, HHS.

ACTION: Notice.

This notice announces a forthcoming meeting of a public advisory committee of the Food and Drug Administration (FDA). The meeting will be open to the public.

Name of Committee: Additives and Ingredients Subcommittee of the Food Advisory Committee.

General Function of the Committee: To provide advice and recommendations to the agency on FDA's regulatory issues.

Date and Time: The meeting will be held on August 26 and 27, 2003, from 8:30 a.m. to 4:30 p.m., and August 28, 2003, from 8:30 a.m. to 12 noon.

Location: St. Regis Hotel (Crystal Ballroom), 923 16th St., NW, Washington, DC 20006, 202–638–2626.

Contact Person: Richard E. Bonnette, Center for Food Safety and Applied Nutrition (HFS–255), Food and Drug Administration, 5100 Paint Branch Pkwy., College Park, MD 20740, 202–418–3034, 202–418–3030, or FDA Advisory Committee Information Line, 1–800–741–8138 (301–443–0572 in the Washington, DC area), code 10564. Please call the Information Line for up-to-date information on this meeting.

Agenda: A small percentage of the population is allergic to natural rubber latex. FDA has received reports of sensitized people experiencing allergic reactions upon eating food they believed was prepared by food handlers wearing natural rubber latex gloves. The purpose of this meeting is to gather information and to provide advice and recommendations to the agency relating to reported allergic reactions to food prepared by workers wearing latex food service gloves.

Procedure: Interested persons may present data, information, or views, orally or in writing, on issues pending before the committee. Written submissions may be made to the contact person by August 20, 2003. Oral presentations from the public will be scheduled between approximately 11 a.m. and 12 noon on August 27, 2003. Time allotted for each presentation may be limited. Those desiring to make formal oral presentations should notify the contact person before August 20, 2003, and submit a brief statement of the general nature of the evidence or arguments they wish to present, the names and addresses of proposed participants, and an indication of the approximate time requested to make their presentation.

Persons attending FDA's advisory committee meetings are advised that the agency is not responsible for providing access to electrical outlets.

FDA welcomes the attendance of the public at its advisory committee meetings and will make every effort to accommodate persons with physical disabilities or special needs. If you require special accommodations due to a disability, please contact Richard E. Bonnette at least 7 days in advance of the meeting.

Notice of this meeting is given under the Federal Advisory Committee Act (5 U.S.C. app. 2).

Dated: July 23, 2003.

Peter J. Pitts,

Associate Commissioner for External Relations.

[FR Doc. 03–19448 Filed 7–30–03; 8:45 am]

BILLING CODE 4160–01–S

DEPARTMENT OF HEALTH AND HUMAN SERVICES

Health Resources and Services Administration

Agency Information Collection Activities: Submission for OMB Review; Comment Request

Periodically, the Health Resources and Services Administration (HRSA) publishes abstracts of information collection requests under review by the Office of Management and Budget, in compliance with the Paperwork Reduction Act of 1995 (44 U.S.C. Chapter 35). To request a copy of the clearance requests submitted to OMB for review, call the HRSA Reports Clearance Office on (301)–443–1129.

Proposed Project: Ryan White Comprehensive AIDS Resources Emergency (CARE) Act: CARE Act Data Report (CADR) Form: (OMB No. 0915–0253)—Revision

The CARE Act Data Report (CADR) form, created in 1999 by the HIV/AIDS Bureau of the Health Resources and Services Administration (HRSA), is designed to collect information from grantees, as well as their subcontracted service providers, funded under Titles I, II, III and IV of the Ryan White (CARE) Act of 1990, as amended by the Ryan White CARE Act Amendments of 1996 and 2000 (codified under Title XXVI of

the Public Health Services Act). All Titles of the CARE Act specify HRSA's responsibilities in the administration of grant funds, the allocation of funds, the evaluation of programs for the population served, and the improvement of the quantity and quality of care. Accurate records of the providers receiving CARE Act funding, the services provided, and the clients served continue to be critical to the implementation of the legislation and thus are necessary for HRSA to fulfill its responsibilities.

CARE Act grantees are required to report aggregate data to HRSA annually. The CADR form is used by grantees and their subcontracted service providers to report data on six different areas: Service provider information, client information, services provided/clients served, demographic information, AIDS Pharmaceutical Assistance and AIDS Drug Assistance Program, and the Health Insurance Program. The primary purposes of the CADR are to: (1) Characterize the organizations from which clients receive services; (2) provide information on the number and characteristics of clients who receive CARE Act services; and (3) enable HAB to describe the type and amount of services a client receives. In addition to meeting the goal of accountability to Congress, clients, advocacy groups, and the general public, information collected on the CADR is critical for HRSA, State and local grantees, and individual providers to assess the status of existing HIV-related service delivery systems.

The estimated response burden for grantees is estimated as:

Title under which grantee is funded	Number of grantee respondents	Responses per grantee	Hours to coordinate receipt of data reports from	Total hour burden
Title I Only	51	1	40	2,040
TitleII Only	59	1	40	2,360
Title III Only	337	1	8	2,696
Title IV Only	90	1	16	1,440
Subtotal	537			8,536

The estimated response burden for service providers is estimated as:

Title under which grantee is funded	Number of respondents	Responses per provider	Hours per response	Total hour burden
Title I Only	1,175	1	24	28,200
Title II Only	995	1	40	39,800
Title III Only	248	1	40	9,920
Title IV Only	98	1	40	3,920
Funded under	394	1	48	18,912
Subtotal	2,782			100,752
Total	3,319			109,288

Written comments and recommendations concerning the proposed information collection should be sent within 30 days of this notice to: Allison Eydt, Human Resources and Housing Branch, Office of Management and Budget, New Executive Office Building, Room 10235, Washington, DC 20503, Fax Number, 202–395–6974.

Dated: July 24, 2003.

Jane M. Harrison,

Director, Division of Policy Review and Coordination.

[FR Doc. 03–19444 Filed 7–30–03; 8:45 am]

BILLING CODE 4165–15–P

DEPARTMENT OF HEALTH AND HUMAN SERVICES

Health Resources and Services Administration

Agency Information Collection Activities: Submission for OMB Review; Comment Request

Periodically, the Health Resources and Services Administration (HRSA) publishes abstracts of information collection requests under review by the Office of Management and Budget, in compliance with the Paperwork Reduction Act of 1995 (44 U.S.C. Chapter 35). To request a copy of the clearance requests submitted to OMB for review, call the HRSA Reports Clearance Office on (301)-443–1129.

Proposed Project: 340B Drug Pricing Program Survey—NEW

Section 340B of the Public Health Act provides that a manufacturer that sells outpatient drugs to covered entities must agree to charge a price that will not exceed the amount determined under a statutory formula. The entities eligible to access such drug pricing (*i.e.*, certain HHS grantees, certain disproportionate share hospitals, and other specified categories of entities) total approximately 10,000 sites. Most of these safety net providers serve the economically disadvantaged or medically uninsured.

A customer survey is being developed to collect information by mail on various aspects of the 340B Drug Pricing Program, including whether information on the program is reaching the covered entities, reasons some entities are not participating, satisfaction with the savings realized, and interest in possible

modifications to the program. Both participating and nonparticipating entities will be included in the survey. The results will be used to improve the design and management of the program.

The estimated response burden is as follows:

Respondents	Number of respondents	Responses per respondent	Total responses	Minutes per response	Total burden hours
Non-participation	283	1	283	0.2	57
Participation	567	1	567	1	567
Total	850		850		624

Written comments and recommendations concerning the proposed information collection should be sent within 30 days of this notice to: Allison Eydt, Human Resources and Housing Branch, Office of Management and Budget, New Executive Office Building, Room 10235, Washington, DC 20503, Fax Number, 202–395–6974.

Dated: July 24, 2003.

Jane M. Harrison,

Director, Division of Policy Review and Coordination.

[FR Doc. 03–19447 Filed 7–30–03; 8:45 am]

BILLING CODE 4165–15–P

DEPARTMENT OF HEALTH AND HUMAN SERVICES

Health Resources and Services Administration

[Announcement Number: HRSA–04–003]

Rural Health Network Development Planning Grant Program—CFDA Number 93.912

AGENCY: Health Resources and Services Administration, HHS.

ACTION: Notice of availability of funds.

SUMMARY: The Health Resources and Services Administration (HRSA), Office of Rural Health Policy (ORHP), announces that approximately $1,000,000 in fiscal year (FY) 2004 funds is available to fund between 10 and 15 Rural Health Network Development Planning Grants. Eligibility is open to rural public or rural non-profit private entities as the lead applicant on behalf of a formative network or consortium of rural health providers. The proposed rural health network or consortium supported by the grant must include three or more health care providers, which may be nonprofit or for-profit entities. These grants will be awarded for a 1-year period.

DATES: Applications (PHS–5161–1 and supplemental material) will be available in July 2003 from the HRSA Grants Application Center (GAC) and must be received in the HRSA GAC at the address below by the close of business, September 10, 2003. Applications will meet the deadline if they are either: (1) Received on or before the deadline date; or (2) postmarked on or before the deadline date, and received in time for submission to the objective review panel. A legible, dated receipt from a commercial carrier or U.S. Postal Service will be accepted instead of a postmark. Private metered postmarks will not be accepted as proof of timely mailing. Applicants should note that HRSA anticipates having the capability to accept grant applications online in the last quarter of the Fiscal Year (July through September). Please refer to the HRSA grants schedule at *http://www.hrsa.gov/grants.htm* for more information.

ADDRESSES: To receive a complete application kit, applicants may telephone the HRSA Grants Application Center at 1–877–477–2123 and present the announcement number HRSA–04–003. All applications should be mailed or delivered to: Grants Management Officer, HRSA Grants Application Center, 901 Russell Avenue, Suite 450, Gaithersburg, MD 20879, telephone: 1–877–477–2123, e-mail: *hrsagac@hrsa.gov*.

FOR FURTHER INFORMATION CONTACT: Michele Pray-Gibson, 301–443–0835 (for questions specific to project activities of the program and program objectives); and Stephannie Young, 301–594–1246 (for grants policy, budgetary, and business questions.)

SUPPLEMENTARY INFORMATION:

Program Purpose/Objectives

This Rural Health Network Development (RHND) Planning Grant Program supports one year of planning to develop integrated health care networks in rural areas. The program is designed to support organizations that wish to develop formal collaborative relationships among health care providers to integrate systems of care administratively, clinically, financially, and technologically. The goal of the RHND Program is to achieve efficiencies; expand access to, coordinate, and improve the quality of essential health care services; and strengthen the rural health care system as a whole. The RHND Planning Grant Program supports this overall program goal by providing support to entities in the formative stages of planning and organizing a rural health network.

The RHND Planning Grant Program provides support to rural entities that seek to develop a formal health care network and that do not have a significant history of collaboration. Formative networks are not sufficiently evolved to apply for a 3-year RHND implementation grant and do not have a formalized structure. Existing networks that seek to expand services or expand their service area are not eligible to apply.

Applicants must propose to use the grant to develop rural health networks that bring together at least three separately owned health care providers. The applicant must demonstrate the need for the network and have identified one or more problems or issues that the network will address. The applying entity must have identified potential network partners and include a letter of support from each of the potential partners of the formative network.

The ultimate goal of the grant program is to strengthen the rural health care delivery system by improving the viability of the individual providers in the network. Networks funded through this program may also include entities that support the delivery of health care services like social service agencies, faith-based organizations, charitable organizations, educational institutions, employers, local governmental agencies or other entities. At least three of the partners that plan to participate in the network, however, must be health service providers. Grant funds may not be used for the direct delivery of services.

The grant support provided under the RHND Planning Grant program may be sufficient to jumpstart a network into becoming operational and developing strategies for becoming sustainable. Grantees of this program will be eligible to apply for up to three years of funding

from the Rural Health Network Development Grant Program at a future time but are not required to do so. Applicants are not required to provide matching funds for the grant but are encouraged to engage the proposed network partners to participate in cost-sharing as demonstration of mutual commitment to the network.

Authorization

Awards will be made under the program authority of section 330A of the Public Health Service Act, 42 U.S.C. 254c.

Eligibility

To be eligible to receive a grant under this program, an applicant must be a rural public or rural non-profit private entity. To ascertain rural eligibility, please refer to *http://ruralhealth.hrsa.gov/funding/eligibility.htm*. The applicant must include letters of support from at least three or more health care providers that may be nonprofit or for-profit entities, that together intend to develop a rural health network. Under the President's initiative, faith-based and community-based organizations that are otherwise eligible and believe they can contribute to HRSA's program objectives are urged to apply to this program.

Funding Level/Project Period:

Contingent upon funding, approximately $1,000,000 in FY 2004 will be available to support the award of 10 to 15 grants for a one-year project period. Award amounts will range from $25,000 to $100,000 each.

Review Criteria

Applications that are complete and responsive to the guidance will be evaluated by an objective review panel specifically convened for this solicitation and in accordance with applicable policies and procedures. Applications for this grant program will be reviewed using the following criteria:

I. Statement of Need (30 Points)

A. The applicant demonstrates the need for Federal funding to support network development activities by describing the environment in which the network will develop and the appropriateness of applying for Federal funding at this point. The applicant provides evidence of the health care needs/problems in the community that the network proposes to address. The applicant utilizes appropriate data sources (*e.g.*, local, state, federal) in their analysis of the environment in which the network is functioning.

If the purpose of the network is to strengthen health providers' ability to serve their community(ies), please include data that demonstrates the providers' needs for greater support in remaining healthy and sustainable.

B. The applicant clearly describes the primary goals and problems/issues to be addressed by the network. The applicant describes how the local community or region to be served will benefit from and be involved in the activities carried out by the network. If the network's primary goal is to strengthen health providers in the community, the applicant describes how providers will benefit from and be involved in the activities carried out by the network.

C. The applicant describes how the local community or region to be served will experience increased or more stable/consistent access to quality health care services across the continuum of care as a result of the integration and coordination of activities carried out by the network.

II. Identification of Potential Network Partners (30 Points)

A. The applicant provides a list or table listing each potential network partner. The table should include each partner's organization name, address, primary contact person, current role in the community/region, and current annual operating expenditure.

B. The applicant explains why these are the appropriate collaborators and why other organizations are not included as part of the formative network at this time. It is recognized that the purpose of the grant is to support development of the network; therefore, discussion could include identification of organizations not yet engaged but that might be candidates for collaboration should the grant be awarded.

C. The applicant describes any history of informal collaboration between the potential partners of the network and provides information regarding the impetus for the network's creation.

D. The applicant provides a map that shows the locations of potential network partners, and/or describes the geographic area that will be served by the network and any other information that will help reviewers visualize and understand the scope of the proposed project.

E. The applying entity must include a letter of support from each of the potential partners of the formative network. These letters should confirm each organization's interest in becoming part of a rural health network and indicate in their own words the organization's understanding of the benefits that the network would bring to itself and the community encompassed by the network. The letter should also include a statement indicating that the potential partner understands that the grant funds would be used for the development of a health care network and are not to be used for the exclusive benefit of any one network partner.

F. The applicant identifies the key person who will be accountable for ensuring grant-funded activities will be carried out. This person will serve to facilitate/convene potential network partners, set meeting agendas, assign and track tasks, etc.

G. The applicant includes a resume for the key person identified in II.E.

H. The applicant identifies the name and affiliation of the person(s) who wrote and prepared the grant application.

III. Statement of Project Workplan (25 Points)

A. The applicant includes a detailed workplan that describes how the grant funds will be used:

Part One: The applicant provides a matrix that carefully integrates goals, strategies, activities, and measurable outcomes and process measures. The matrix outlines the individual responsible for carrying out each activity and includes a timeline for the duration of the project. A sample matrix template will be provided in the application instructions.

Part Two: The applicant explains how the goals and activities outlined in the matrix will be accomplished in narrative format.

B. The applicant's workplan should either include a task that addresses each of the following four areas (or describes how each area is being addressed):

(1) Identifies potential collaborating network partners in addition to those already named in the grant application that provided letters of support.

(2) Convenes potential collaborating network partners.

(3) Conducts planning activities:

a. Conducts a needs assessment to ensure a complete understanding of the health care and provider-related challenges faced by the community/region to be served, and by the potential network partners.

b. Identifies the needs of potential network partners.

c. Identifies factors that will lead to the network's sustainability. This could include:

- Examining the benefits that may accrue to network members and the community they serve as a result of

collaborative action and potential effects of inaction.

• Examining the strengths, weaknesses, and opportunities of potential network members and the communities they serve. d.Develops a business, operational, or strategic plan. e.Develops a plan for the network's sustainability. f.Carries out organizational development activities *e.g.*, creating a formal Memorandum of Agreement/Understanding (MOA/MOU); establishing a network board; establishing bylaws; applying for 501(c)3 status, etc.

(4) Begins carrying out network activities, including activities to promote the network's sustainability.

Models That Work: If the application proposal is based upon another program that has worked in another community, please describe that program, why you think it will succeed in your community, what elements will be different in your community and how it was funded. There is particular interest in programs that may have received funding from the Department of Health and Human Services.

(5) *Project Monitoring:* The applicant describes measures to be implemented for assuring effective performance of the proposed project. The applicant describes on-going quality assurance/quality improvement strategies that will assist in the early identification and modification of ineffective project activities. For example, if one of the network's key strategies for reaching a network goal turns out to be ineffective, the applicant describes the measures in place to identify and address this situation.

IV. Budget (15 Points)

Applicants must provide details and justification for all items in the budget and explain the relevance of each cost to the overall goals and activities of the project. This includes a budget spreadsheet and a descriptive narrative justification that provides details for each budget item including contractual costs. The applicant illustrates that proposed grant funds will not be used to supplant funds already in place. The applicant is encouraged to include a description of funds already expended in support of networking activities.

V. Network Characteristics (5 Points)

Applicants that can demonstrate that their projects address any of the following criteria will receive a maximum of five additional points:

A. Projects that use telehealth and/or new and emerging technologies to help achieve their project goals. The advent of advanced communication tools such as distance learning, remote patient monitoring, personal data assistants (PDAs), interactive video, satellite broadcasting and store-and-forward technology are just some of the many health care focused technological applications that can help improve access to care either directly or indirectly by improving the efficiency of local health care providers; or

B. Projects that significantly address oral health care needs of the community to be served; or

C. Projects that significantly address mental health service needs of the community to be served; or

D. Projects in which the proposed network includes at least one Critical Access Hospital; or

E. Projects in which the proposed network does not include a facility that currently receives a DHHS-sponsored grant.

Funding Preference

The authorizing legislation for Network Development Planning Grants provides a funding preference for some applicants. Applicants receiving a preference will be placed in a more competitive position among the applications that can be funded. A funding preference will be given to any qualified applicant that can demonstrate either of the following two criteria:

A. Those applicants for which at least 50 percent of the proposed rural health network's service area is located in officially designated health professional shortage areas (HPSAs) or medically underserved communities (MUCs) or serve medically underserved populations (MUPs).

To ascertain HPSA and MUP designation status, please refer to the following Web site: *http://bhpr.hrsa.gov/shortage/index.htm*.

To qualify as a Medically Underserved Community (MUC), at least 50 percent of the network's participation must include facilities that are federally designated as any of the following:

(a) Community Health Centers,

(b) Migrant Health Centers,

(c) Health Care for the Homeless Grantees,

(d) Public Housing Primary Care Grantees,

(e) Rural Health Clinics,

(f) National Health Service Corps sites,

(g) Indian Health Service Sites,

(h) Federally Qualified Health Centers,

(i) Primary Medical Care Health Professional Shortage Areas,

(j) Dental Health Professional Shortage Areas,

(k) Nurse Shortage Areas,

(l) State or Local Health Departments,

(m) Ambulatory practice sites designated by State Governors as serving medically underserved communities; or

B. Those applicants whose projects focus on primary care, and wellness and prevention strategies.

To receive a funding preference, applicants must clearly identify and demonstrate which preference they are requesting as instructed in the program guidance and application instructions.

Executive Order 12372

This grant program is subject to Executive Order 12372, which requires applicants to seek comments on the application from their State Single Point of Contact (SPOC) unless the applicant is a Federally recognized Indian tribal government or the State does not participate in this process. A list of State SPOCs and the non-participating States is included with the application kit and is also available at *http://www.whitehouse.gov/omb/grants/spoc.html*. In general, SPOCs are State agents that review grant applications to determine if they are in accordance with State policy. Applicants in States with a SPOC must contact the SPOC about the application and receive any instructions on the State process. Further, applicants in participating States must submit a copy of the application to the SPOC no later than the Federal application receipt deadline.

Dated: July 3, 2003.

Elizabeth M. Duke,

Administrator.

[FR Doc. 03–19443 Filed 7–30–03; 8:45 am]

BILLING CODE 4165–15–P

DEPARTMENT OF HEALTH AND HUMAN SERVICES

Substance Abuse and Mental Health Services Administration

Fiscal Year (FY) 2003 Funding Opportunity

AGENCY: Substance Abuse and Mental Health Services Administration, HHS.

ACTION: Notice of intent to award a Single Source Cooperative Agreement to the Ohio Department of Alcohol and Drug Addictions Services' (ODADAS) Rehabilitation and Restitution project in Cuyahoga County, Ohio.

SUMMARY: The Substance Abuse and Mental Health Services Administration (SAMHSA), Center for Substance Abuse Treatment (CSAT) is publishing this notice to provide information to the

public concerning a planned single source cooperative agreement in the amount of $600,000 in FY 2003 to the Ohio Department of Alcohol and Drug Addictions Services' (ODADAS) Rehabilitation and Restitution project in Cuyahoga County, Ohio. This is not a formal request for applications. Assistance will be provided only to the above named agency based on the receipt of a satisfactory application that is approved by an independent review group.

Funding Opportunity Number: TI 03–013.

Catalog of Federal Domestic Assistance (CFDA) Number: 93.243

Authority/Justification: Section: 509 of the Public Health Service Act, as amended and subject to the availability of funds. Only the Ohio Department of Alcohol and Drug Addiction Services (ODADAS)/Cuyahoga County is eligible to apply for supplemental funding.

SAMHSA/CSAT's Rehabilitation and Restitution Program (RRP), announced in 2001, is a unique program containing some previously untested program elements and approaches. RRP is limited to applicants in States that have laws permitting the sealing of the records of most convicted, first-time, non-violent ex-felons within 5 years of the end of post-release supervision. This restriction is essential because SAMHSA/CSAT grants are no longer than 5 years in length, and consequently, States requiring longer waiting periods cannot provide the results needed within a 5-year project period. Only 4 applications were received due to this limitation.

Two Ohio projects were funded in 2002, ODADAS/Cuyahoga County and the Clermont County Treatment Alternatives for Safe Communities (TASC). Uncertainty about appropriate program costs and the uniqueness and importance of the program resulted in a requirement that grantees go through a planning year to design their projects. The ODADAS/Cuyahoga County project has, in the planning year, demonstrated management skills necessary to implement the project, entered into close collaborative relationships with other agencies essential to the successful completion of the project, and demonstrated the ability to recruit the required 1200 eligible project participants. However, other unanticipated gaps in their comprehensive project could jeopardize its success. These result in a need to increase, among other things:

- Residential treatment capacity;
- Employment and educational training components;
- Case management services; and
- Treatment services after the initial treatment period, typically beginning when the offender ends probation or parole.

Supplemental funding is critically necessary to address these gaps in services and ensure the success of the ODADAS/Cuyahoga County project. Project results will inform the national substance abuse field: (1) Whether comprehensive substance abuse treatment and other services and case management available for up to 5 years will reduce relapse and recidivism compared to programs that are much shorter; (2) Whether this program will increase the percentage of persons who have their first offense non-violent felony records sealed in States which permit this; and (3) whether the possibility of having felony records sealed significantly alters client behavior with respect to educational and job choices, relapse, and recidivism.

Contact for Additional Information: Bruce Fry, Government Project Officer, Division of Services Improvement, SAMHSA/CSAT, Rockwall II, 5600 Fishers Lane, Suite 740, Rockville, MD 20857; (301) 443–0128, *bfry@samhsa.gov*

Dated: July 25, 2003.

Anna Marsh,

Acting Executive Officer, Substance Abuse and Mental Health Services Administration.

[FR Doc. 03–19507 Filed 7–30–03; 8:45 am]

BILLING CODE 4162–20–P

DEPARTMENT OF THE INTERIOR

Office of the Secretary

Blackstone River Valley National Heritage Corridor Commission; Notice of Meeting

Notice is hereby given in accordance with section 552b of Title 5, United States Code, that a meeting of the John H. Chafee, Blackstone River Valley National Heritage Corridor Commission will be held on Thursday, September 18, 2003.

The Commission was established pursuant to Pub. L. 99–647. The purpose of the Commission is to assist federal, state and local authorities in the development and implementation of an integrated resource management plan for those lands and waters within the Corridor.

The meeting will convene on September 18, 2003 at 7 p.m. in Lincoln Town Hall located at 100 Old River Road, Lincoln, Rhode Island, for the following reasons:

1. Approval of Minutes.
2. Chairman's Report.
3. Executive Director's Report.
4. Financial Budget.
5. Public Input.

It is anticipated that about twenty-five people will be able to attend the session in addition to the Commission members.

Interested persons may make oral or written presentations to the Commission or file written statements. Such requests should be made prior to the meeting to: Michael Creasey, Executive Director, John H. Chafee, Blackstone River Valley National Heritage Corridor Commission, One Depot Square, Woonsocket, RI 02895, Tel.: (401) 762–0250.

Further information concerning this meeting may be obtained from Michael Creasey, Executive Director of the Commission at the aforementioned address.

Michael Creasey,

Executive Director BRVNHCC.

[FR Doc. 03–19483 Filed 7–30–03; 8:45 am]

BILLING CODE 4310–RK–P

DEPARTMENT OF THE INTERIOR

Fish and Wildlife Service

Information Collection Submitted to the Office of Management and Budget (OMB) for Approval Under the Paperwork Reduction Act; Alaska Subsistence Household Survey

AGENCY: Fish and Wildlife Service, Interior.

ACTION: Notice; request for comments.

SUMMARY: The U.S. Fish and Wildlife Service has submitted the collection of information listed below to OMB for approval under the provisions of the Paperwork Reduction Act. If you wish to obtain copies of the proposed information collection requirement, related forms, or explanatory material, contact the Service Information Collection Officer at the address listed below.

DATES: We will accept comments until September 2, 2003.

ADDRESSES: Submit your comments on this information collection to the Desk Officer for the Department of the Interior at OMB–OIRA via facsimile or e-mail using the following fax number or e-mail address: (202) 395–5806 (fax); *ruth_solomon@omb.eop.gov* (e-mail). Please provide a copy of your comments to the Fish and Wildlife Service's Information Collection Officer, 4401 N. Fairfax Dr., MS 222 ARLSQ, Arlington, VA 22207; (703) 358–2269 (fax); or *anissa_craghead@fws.gov* (e-mail).

FOR FURTHER INFORMATION CONTACT: To request a copy of the information collection request, explanatory information, or related forms, contact Anissa Craghead by phone at (703) 358–2445 or by e-mail at *anissa_craghead@fws.gov.*

SUPPLEMENTARY INFORMATION: The Office of Management and Budget (OMB) regulations at 5 CFR 1320, which implement provisions of the Paperwork Reduction Act of 1995 (44 U.S.C. 3501 *et seq.*), require that interested parties and affected agencies have an opportunity to comment on information collection and recordkeeping activities (*see* CFR 1320.8(d)). The U.S. Fish and Wildlife Service (we, or the Service) has submitted a request to OMB for approval of a collection of information related to the subsistence migratory bird harvest in Alaska. We are requesting a 3-year term of approval for this collection activity. Federal agencies may not conduct or sponsor, and a person is not required to respond to, a collection of information unless it displays a currently valid OMB control number.

The Migratory Bird Treaty Act (16 U.S.C. 703–711) and the Fish and Wildlife Act of 1956 (16 U.S.C. 742d) designate the Department of the Interior as the key agency responsible for the management of migratory bird populations frequenting the United States and for the setting of harvest regulations that allow for the conservation of those populations. These responsibilities include gathering accurate geographical and temporal data on various characteristics of migratory bird harvest. We use that data to promulgate harvest regulations. Annually, we adjust harvest regulations as needed to provide a maximum of subsistence harvest opportunity while keeping migratory bird populations at desired levels.

The Migratory Bird Treaty Act Protocol Amendment (1995) (Amendment) provides for the customary and traditional use of migratory birds and their eggs for subsistence use by indigenous inhabitants of Alaska. The Amendment, however, states that it is not the intent of the Amendment to cause significant increases in the take of species of migratory birds relative to their continental population sizes. A May 20, 1996, letter of submittal from the Department of State to the White House, which officially accompanied the Amendment, specifies the need for harvest monitoring and states that harvest estimates will be collected cooperatively by the Service, the State Department of Fish and Game, and Native organizations within the subsistence eligible areas. Harvest survey data help ensure that customary and traditional use of migratory birds and their eggs for subsistence use by indigenous inhabitants of Alaska does not significantly increase the take of species of migratory birds relative to their continental population sizes.

We have monitored the subsistence harvest in Alaska for the past 14 years through the use of annual household surveys in the most heavily used subsistence harvest areas (*e.g.*, Yukon-Kuskokwim Delta). Continuation of this monitoring would enable tracking of any significant changes or trends in levels of harvest and user participation after legalization of the harvest. The harvest survey method and forms that we used to collect information were not approved by OMB. We are requesting that OMB approve these forms and that the public comment on this information collection. We will not conduct or sponsor any surveys until we obtain OMB approval of this information collection.

This collection helped, and would help, us gather information on the annual subsistence harvests of 49 species of birds, including geese, ducks, swans, cranes, loons, seabirds, shorebirds, and upland game birds. The survey was, and would be, conducted by local village resident surveyors in the subsistence-eligible areas of Alaska, under the guidance of Service employees and contractors (such as Alaska Native organizations and the Alaska Department of Fish and Game). The local village surveyors annually provided, and would provide, us lists of all households in each village. Randomly selected households then received, and would receive, survey forms from the village surveyor. The household either completed, and would complete, the form independently, or the village surveyor helped, and would help, the household complete the form. Forms were then, and would be, turned in to us. The resulting estimates of harvest per household were, and would be, combined with the complete list of households in the subsistence-eligible areas to provide estimates of the total annual harvest of the 49 species of birds.

On March 3, 2003, we published in the **Federal Register** (68 FR 10024) a notice informing the public that we plan to request OMB approval under the Paperwork Reduction Act of the forms described. We requested public comment on the information collection for 60 days, ending May 2, 2003. By that date we did not receive any comments. This notice provides an additional 30 days in which to comment on the following information.

Title: List of All Occupied Households, with Hunting Category Noted.

Approval Number: 1018–xxxx.

Form number: 7–FW–100.

Frequency of Collection: Once per year.

Description of Respondents: Local village surveyors.

Total Annual Responses: 188. We estimate one form for each of the 188 communities, which amounts to 188 forms annually.

Total Annual Burden Hours: 433 hours. We estimate the reporting burden at one minute for each of the total 26,000 households in 188 communities, or 433 hours total.

Note: This form is maintained by the local village surveyor. This form does not record, nor is it arranged or retrieved, by personal identifier.

Title: Households Separated by Hunting Category.

Approval Number: 1018–xxxx.

Form number: 7–FW–101.

Frequency of Collection: Once per year.

Description of Respondents: Local village surveyors.

Total Annual Responses: 188. We estimate one form for each of the 188 communities, which amounts to 188 forms annually.

Total Annual Burden Hours: 94 hours. We estimate it takes each surveyor an average of one-half hour to transfer the information from Form 7–FW–100 to Form 7–FW–101. With an estimated 188 surveyors in up to 188 communities, we estimate 94 hours total annual burden.

Note: The local village surveyor provides this form to us. This form does not record, nor is it arranged or retrieved, by personal identifier.

Title: Permission slip for participation in the survey.

Approval Number: 1018-xxxx.

Form number: 7–FW–102.

Frequency of Collection: Once per year.

Description of Respondents: Households within the subsistence eligible areas of Alaska (50 CFR Part 92.5).

Total Annual Responses: 16,000. We estimate up to 13,000 of the approximately 26,000 households in the subsistence eligible areas will participate in the survey. Up to 16,000 households will have to be asked permission in order to get a sample size of 13,000 households.

Total Annual Burden Hours: 1,333 hours. It will take the surveyor an

average of 5 minutes per household to determine whether or not that household agrees to participate in the subsistence harvest survey. With an estimated 16,000 households responding to the permission slip, this amounts to 1,333 hours total annual burden.

Note: This form is maintained by the local village surveyor. The surveyor asks each household if that household will participate in the subsistence harvest survey. The surveyor then notes a ''yes'' or a ''no'' on a permission slip. Each household with a ''yes'' permission slip is given a survey form (described below). This form does not record, nor is it arranged or retrieved, by personal identifier.

Title: Migratory Bird Subsistence Harvest Household Survey.

Approval Number: 1018-xxxx.

Form number: 7–FW–103.

Frequency of Collection: Three times per year—spring, summer, and fall.

Description of Respondents: Households within the subsistence eligible areas of Alaska (50 CFR Part 92.5).

Total Annual Responses: 39,000. We estimate up to 13,000 of the approximately 26,000 households in the subsistence eligible areas will participate in the survey, responding three times annually.

Total Annual Burden Hours: 3,250 hours. We estimate the reporting burden to average 5 minutes per respondent for the Migratory Bird Subsistence Harvest Household Survey. With an estimated 13,000 respondents filling out the form three times annually, the annual burden hours total 3,250 hours.

Note: The local village surveyor provides completed survey forms to us. The survey form consists of three pages, one page each for spring, summer, and fall. Each page has 51 bird illustrations, with spaces beside each illustration to mark down numbers of birds and eggs taken. This form does not record, nor is it arranged or retrieved, by personal identifier; the household number is written on each page of the survey form, along with a village number. The results of this annual survey help us understand the effect of subsistence hunting on migratory bird populations, while also evaluating the effects of newly established spring/summer season dates, species closures, and methods and means prohibitions.

We again invite comments on this proposed information collection on the following: (1) Whether the collection of information is necessary for the proper performance of the function of the agency, including whether the information will have practical utility; (2) the accuracy of our estimate of the burden of the collection of information; (3) ways to enhance the quality, utility, and clarity of the information to be collected; and (4) ways to minimize the burden of the collection on respondents.

Dated: July 28, 2003.

Anissa Craghead,

Information Collection Officer, Fish and Wildlife Service.

[FR Doc. 03–19490 Filed 7–30–03; 8:45 am]

BILLING CODE 4310–55–P

DEPARTMENT OF THE INTERIOR

Fish and Wildlife Service

Information Collection Submitted to the Office of Management and Budget (OMB) for Renewal Under the Paperwork Reduction Act; Special Use Permit Applications for National Wildlife Refuges in Alaska

AGENCY: Fish and Wildlife Service, Interior.

ACTION: Notice; request for comments.

SUMMARY: The U.S. Fish and Wildlife Service has submitted a request to OMB to renew approval, under the provisions of the Paperwork Reduction Act of 1995, of the collection of information for special use permit applications on national wildlife refuges in Alaska. An estimate of the information collection requirement is included with this notice.

DATES: You must submit comments on or before September 2, 2003.

ADDRESSES: Submit your comments on this information collection renewal to the Desk Officer for the Department of the Interior at OMB-OIRA via facsimile or e-mail using the following fax number or e-mail address: (202) 395–5806 (fax); *ruth_solomon@omb.eop.gov* (e-mail). Please provide a copy of your comments to the Fish and Wildlife Service's Information Collection Clearance Officer, 4401 N. Fairfax Dr., MS 222 ARLSQ, Arlington, VA 22207; (703) 358–2269 (fax); or *anissa_craghead@fws.gov* (e-mail).

FOR FURTHER INFORMATION CONTACT: To request a copy of the information collection request, explanatory information, or related forms, contact Anissa Craghead at (703) 358–2445; or electronically to *anissa_craghead@fws.gov*.

SUPPLEMENTARY INFORMATION: The Office of Management and Budget (OMB) regulations at 5 CFR 1320, which implement provisions of the Paperwork Reduction Act of 1995 (44 U.S.C. 3501 *et seq.*), require that interested members of the public and affected agencies have an opportunity to comment on information collection and recordkeeping activities (*see* 5 CFR 1320.8(d)). We submitted the following request to OMB to renew approval of the collection of information needed for special use permit applications for national wildlife refuges in Alaska. OMB has up to 60 days to approve or disapprove this information collection but may respond after 30 days. To ensure maximum consideration, send your comments to OMB by the date listed in the **DATES** section near the beginning of this notice. We may not conduct or sponsor, and a person is not required to respond to, a collection of information unless it displays a currently valid OMB control number.

On February 14, 2003, we published a notice in the **Federal Register** (68 FR 7578) inviting the public to comment on this information collection. We did not receive any comments.

The National Wildlife Refuge Administration Act of 1966, as amended (16 U.S.C. 668dd–ee) (Administration Act) authorizes us to permit uses, including commercial visitor services, on national wildlife refuges only when we find the activity to be compatible with the purposes for which the refuge was established. The National Wildlife Refuge System Improvement Act of 1997 (Pub. L. 105–57) (Improvement Act) amended the Administration Act and established ''organic legislation'' for the National Wildlife Refuge System with a unifying mission. It also modified the process for determining compatible uses on refuges and required that we determine the use of refuge lands to be compatible with the mission of the Refuge System, as well as the refuge purposes. We published proposed regulations for determining if a use is compatible in the **Federal Register** on September 9, 1999 (64 FR 49056), along with a draft compatibility policy.

The Alaska National Interest Lands Conservation Act (ANILCA) (16 U.S.C. 3101 *et seq.*) was signed into law on December 2, 1980. Its broad purpose is to provide for the disposition and use of a variety of federally owned lands in Alaska. Section 303 of ANILCA established the purposes for each Alaska refuge, and Section 304 requires that all uses we authorize on Alaska refuges first be found to be compatible with the refuge purposes. You can find regulations for administering special use permits on Alaska refuges in 50 CFR part 36.41.

Section 810 of ANILCA (16 U.S.C. 3120) requires that we evaluate the effect of any proposed use of refuge lands on subsistence uses and needs in determining whether to permit such uses. It restricts us from permitting a use which would significantly restrict

subsistence uses unless we give notice to the appropriate State agency and local committees and regional councils, hold a hearing in the vicinity of the area involved, and determine that such a restriction of subsistence uses is necessary, is consistent with sound management principles, is for the utilization of public lands, will involve the minimum amount of public lands necessary, and will include reasonable steps to minimize adverse impacts.

Sections 1303 and 1315 of ANILCA (16 U.S.C. 3193; 3203–3204) allow the Secretary of Interior to permit construction, use, and occupancy of cabins in national wildlife refuges in Alaska under certain conditions. Section 1303(b)(3) of ANILCA states that we will issue no special use permits for cabins unless the permit applicant provides certain items of information. You can find regulations issued to implement these provisions in 50 CFR part 36.33.

Section 1307 of ANILCA (16 U.S.C. 3197) contains two provisions concerning persons and entities to whom we are to give special rights and preferences with respect to providing ''visitor services'' on refuges in Alaska. Section 1307 defines ''visitor services,'' as ''* * * any service made available for a fee or charge to persons who visit a conservation system unit, including such services as providing food, accommodations, transportation, tours and guides, excepting the guiding of sport hunting and fishing.'' You may find regulations issued to implement these activities in 50 CFR part 36.37.

We will provide the permit applications as requested by interested Alaska citizens. We will use information provided on the required written forms and/or verbal applications to determine if the proposed activity is compatible with refuge purposes and to ensure that the applicant is eligible for a permit, or in the case of competitively awarded permits, we will use the information to determine the most qualified applicant to receive benefits of a refuge permit. In the case of permits awarded under section 1307 of ANILCA, we will use the information to determine whether the applicant is: A member of a Native Corporation; a local resident; and/or was engaged in adequately providing visitors services on or before January 1, 1979; or is eligible to receive Cook Inlet Region rights.

We make provision in our general refuge regulations for public entry for specialized purposes, including economic activities such as the operation of guiding and other visitor services on refuges by concessionaires or cooperators under appropriate contracts or legal agreements (found in 50 CFR part 25.61) or special use permits (found in 50 CFR parts 36.37, 36.41, 26.22(b) and 26.25). These rules provide the authorities and procedures for selecting permittees on Alaska refuges, the vast majority of which are providers of services and facilities to the public. We will issue permits for a specific period as determined by the type and location of the use or visitor service provided.

We have made several minor revisions to the special use permit application form we use for Alaska refuges (USFWS Form 3–2001), and we explain the changes as follows:

1. On the page one, item 2, we added the phrase, ''* * * and are not inconsistent with public safety'' to the end of the first sentence to be consistent with Service regulations and policy requirements that we consider public safety, as well as the other factors listed, before authorizing uses on national wildlife refuges.

2. On page one, item 3, we corrected the last sentence to state that permit applicants must provide their social security number or taxpayer identification number for activities subject to collection of fees by the Service, and we provided the legal citation for this requirement.

3. On page one, item 6, we modified the first sentence to reflect our revised estimates of the public reporting burden.

4. On page 2, we modified the application to provide the applicant the option to provide his/her taxpayer identification number or social security number.

5. On page 2, we requested ''valid dates'' for the alternate phone number.

6. On page 3, we replaced a confusing table with a list of Alaska refuges and types of uses in order to simplify the application. On the revised application, the applicant only needs to identify the refuge and the proposed activities applicable to his/her application by marking with an ''X'' on the lists provided on the application form. By eliminating the table, we also provided more space on the application to provide a description and location of the proposed activity or use.

7. We rearranged the permit information required on page 4 into a more logical sequence and format in order to simplify the application. We also added a statement of reference to an enclosed Insurance Information Sheet for minimum insurance requirements.

8. On page 5, item 14, we added language to clarify that we need copies of only those State or Federal licenses, certifications, and registrations that are required for the activity the applicant proposes to conduct on the refuge.

In addition to the revisions identified above, we made a few minor editorial changes to the application form for clarification and plain language requirements. The editorial changes do not affect the information requirements of the application.

We revised the estimated number of respondents reported in the **Federal Register** notice published on February 14, 2003 (68 FR 7578), but we did not revise our estimated number of responses or our total annual burden estimate. We previously estimated the annual number of respondents (applicants) to be the same as the number of responses (applications). We reduced the estimated number of applicants because many individuals submit separate applications for different types of activities and/or for difference refuges.

Title: Special Use Permit Applications for National Wildlife Refuges in Alaska.

OMB Control Number: 1018–0014.

Service Form Number: 3–2001.

Frequency of collection: On occasion.

Description of the respondents: Individuals and households; business and other for-profit institutions; farms; and State, local or Tribal governments.

Total Annual Number of respondents (applicants): 200.

Total Annual Number of responses (applications): 350 (180 competitive permit applications and 170 non-competitive permit applications).

Information Collection Burden Estimate:

Type of permit application	Annual number of responses	Completion time (hours)	Annual burden (hours)
Competitively issued permit	180	30	5,400
Non-competitively issued permit	170	1.5	255
Combined Total	350		5,655

We invite comments concerning this renewal on: (1) Whether the collection of information is necessary for the proper performance of our functions, including whether the information will have practical utility; (2) The accuracy of our estimate of the burden of the collection of information; (3) Ways to enhance the quality, utility, and clarity of the information to be collected; and (4) Ways to minimize the burden of the collection of information on respondents. This information collection is part of a system of record covered by the Privacy Act (5 U.S.C. 552(a)).

Dated: July 28, 2003.

Anissa Craghead,

Information Collection Officer, Fish and Wildlife Service.

[FR Doc. 03–19491 Filed 7–30–03; 8:45 am]

BILLING CODE 4310–55–P

DEPARTMENT OF THE INTERIOR

Fish and Wildlife Service

Availability of Draft Comprehensive Conservation Plan and Environmental Assessment for Mark Twain National Wildlife Refuge Complex in Iowa, Illinois and Missouri

AGENCY: U.S. Fish and Wildlife Service, Interior.

ACTION: Notice of availability.

SUMMARY: Pursuant to the Refuge Improvement Act of 1997, the U.S. Fish and Wildlife Service has published a draft Comprehensive Conservation Plan and Environmental Assessment for Mark Twain National Wildlife Refuge Complex (Complex). This Plan describes how the Service intends to manage the Refuge Complex for the next 15 years.

DATES: Comments must be received by September 30, 2003. All comments should be addressed to Mark Twain National Wildlife Refuge Complex, Attention: CCP Comment, 1704 North 24th Street, Quincy, Illinois 62301, or direct e-mail to *r3planning@fws.gov.* Comments may also be submitted through the Service's regional Web site at *http://midwest.fws.gov/planning.*

ADDRESSES: A draft Plan or summary may be obtained by writing to the Service or submitting a request electronically. These documents will also be made available in portable document format (pdf) on the U.S. Fish and Wildlife Service Web site at *http://midwest.fws.gov/planning.* Address requests to: U.S. Fish & Wildlife Service, Branch of Ascertainment and Planning, Attn: CCP Comment, BHW Federal Building, 1 Federal Drive, Ft. Snelling, MN, 55111; or direct e-mail to *r3planning@fws.gov.*

FOR FURTHER INFORMATION CONTACT: For additional information on the draft comprehensive conservation plan and environmental assessment, contact Dick Steinbach, Complex Manager, at the address above or call the Refuge at 217/224–8580.

SUPPLEMENTARY INFORMATION: In 1997, Congress mandated that the Service prepare a comprehensive conservation plan for each refuge within the National Wildlife Refuge System. Comprehensive conservation plans guide management decisions over the course of 15 years. The Mark Twain NWR Complex includes Port Louisa NWR, Great River NWR, Clarence Cannon NWR, Two Rivers NWR, and Middle Mississippi River NWR, which are all located along the Upper Mississippi River. The Draft Plan identifies goals and objectives for habitat management, land protection and wildlife-dependent recreation, as well as strategies for achieving those goals and objectives.

Dated: September 6, 2002.

William F. Hartwig,

Regional Director.

[FR Doc. 03–19484 Filed 7–30–03; 8:45 am]

BILLING CODE 4310–55–P

DEPARTMENT OF THE INTERIOR

Fish and Wildlife Service

North American Wetlands Conservation Act: Request for Small Grants Proposals for Year 2004

AGENCY: Fish and Wildlife Service, Interior.

ACTION: Notice of request for proposals.

SUMMARY: The purpose of this notice is to advise the public that we, the U.S. Fish and Wildlife Service (Service) and the North American Wetlands Conservation Council (Council), are currently entertaining proposals that request match funding for wetland and wetland-associated upland conservation projects under the Small Grants program. Projects must meet the purposes of the North American Wetlands Conservation Act of 1989, as amended. We will give funding priority to projects from new grant applicants with new partners, where the project ensures long-term conservation benefits. However, previous Act grantees are eligible to receive funding and can compete successfully on the basis of strong project resource values.

DATES: Proposals must be postmarked no later than Friday, November 28, 2003.

ADDRESSES: Address proposals to: Division of Bird Habitat Conservation, U.S. Fish and Wildlife Service, 4401 North Fairfax Drive, Mail Stop 4075, Arlington, Virginia 22203, Attn: Small Grants Coordinator.

FOR FURTHER INFORMATION CONTACT: Dr. Keith A. Morehouse, Small Grants Coordinator, or Office Secretary, Division of Bird Habitat Conservation, 703.358.1784; facsimile 703.358.2282.

SUPPLEMENTARY INFORMATION: The purpose of the 1989 North American Wetlands Conservation Act (NAWCA), as amended (16 U.S.C. 4401 *et seq.*) is, through partnerships, to promote long-term conservation of North American wetland ecosystems and the waterfowl and other migratory birds, fish and wildlife that depend upon such habitats. Principal conservation actions supported by NAWCA are acquisition, enhancement and restoration of wetlands and wetlands-associated upland habitat.

Initiated in 1996, the underlying objective of the NAWCA-based Small Grants program is to promote long-term wetlands conservation activities through encouraging participation by new grantees and partners who may not otherwise be able to compete in the Standard Grants program. We also hope that successful participants in the Small Grants program later will be encouraged to participate as a grantee or partner in the Standard Grants program. Over the first seven years of the Small Grants program, about 630 proposals requesting a total of approximately $24.1 million competed for funding. Ultimately, 206 projects were funded over this period for about $8.7 million. For 2004, with the approval of the Migratory Bird Conservation Commission, we have made the Small Grants program operational at approximately $2.0 million. That is, up to $2.0 million in Small Grants wetland projects may be funded. However, ultimately, the level of Small Grant funding depends upon the quality of the pool of grant proposals.

To be considered for funding in the 2004 cycle, proposals must have a grant request no greater than $50,000. We will accept all wetland conservation proposals that meet the requirements of the Act. However, considering appropriate proposal resource values, we will give funding priority to projects from new grant applicants (individuals or organizations who have never received a NAWCA grant) with new partners, where the project ensures

long-term conservation benefits. This priority system does not preclude former NAWCA grant recipients from receiving Small Grants funding; ultimately, project resource value is the critical factor in deciding which projects receive funding. Also, projects are likely to receive a greater level of attention if they are part of a broader related or unrelated effort to bring or restore wetland or wetland-associated upland conservation values to a particular area or region.

In addition, proposals must represent on-the-ground projects, and any overhead in the project budget must constitute 10 percent or less of the grant amount. The anticipated magnitude of wetlands and wildlife resources benefits that will result from project execution is an important factor in proposal evaluation, and there should be a reasonable balance between acreages of wetlands and wetland-associated uplands. As per the Act, mitigation-related projects are not considered for funding.

Please keep in mind that NAWCA and matching funds may be applied only to wetlands acquisition, creation, enhancement, and/or restoration; they may not be applied to signage, displays, trails or other educational features, materials and equipment, even though the goal of the project may ultimately be to support wetland conservation education curricula. Projects oriented toward education are not ordinarily eligible for NAWCA funding because education is not a primary purpose of the Act. However, acceptable project outcomes can include educational benefits resulting from conservation actions. Research is also not a primary purpose of the Act, and research proposals are not considered for funding.

Even though we require less total application information for Small Grants than we do for the Standard Grants program, Small Grant proposals must have clear explanations and meet the basic purposes given above and the 1:1 or greater non-Federal matching requirements of the NAWCA. Small Grants projects must also be consistent with Council-established guidelines, objectives and policies. All non-Federal matching funds and proposed expenditures of grant funds must be consistent with Appendix A of the Small Grants instructions, ''Eligibility Requirements for Match of NAWCA Grant and Non-Federal Funds.'' Applicants must submit a completed Standard Form 424, Application For Federal Assistance. Hard copies of Small Grant instructions (booklets) are no longer provided, except under special circumstances. However, the NAWCA Program website, birdhabitat.fws.gov, contains instructions for completing and submitting a Small Grant application, as well as forms and instructions for the Standard Form 424.

Small Grant proposals may be submitted prior to the due date but must be postmarked no later than Friday, November 28, 2003. Address submitted proposals as follows: Division of Bird Habitat Conservation, U.S. Fish and Wildlife Service, 4401 North Fairfax Drive, Mail Stop MSBP4075, Arlington, VA 22203, Attn: Small Grants Coordinator.

Applicants must submit *complete* grant request packages to the Division of Bird Habitat Conservation (DBHC), including *all* of the documentation of partners (partner letters) with funding pledge amounts. Information on funding in partner letters, *i.e.*, amounts and description regarding use, must correspond with budget amounts in the budget table and any figures provided in the narrative.

With the volume of proposals received, we usually are not able to contact proposal sources to verify and/or request supplemental data and/or materials. Thus, those proposals lacking required information or containing conflicting information are subject to being declared ineligible and not further considered for funding.

For more information, call the DBHC office secretary at 703.358.1784, facsimile 703.358.2282, or send e-mail to *dbhc@fws.gov.* Small Grant application instructions may be available by E-mail as a WordPerfect© file, upon special request.

In conclusion, we require that, upon arrival in the DBHC, proposal packages must be: complete with regard to the information requested, presented in the format requested, and be presented according to the established deadline.

The Service submitted information collection requirements to the Office of Management and Budget (OMB) for review and approval under the Paperwork Reduction Act of 1995, Public Law 104–13. On August 28, 2002, OMB gave its approval for this information collection and confirmed the approval number as 1018–0100; this approval expires on August 31, 2005. An agency may not conduct or sponsor, and a person is not required to respond to, a collection of information unless it displays a currently valid OMB control number. The information collection solicited: is necessary to gain a benefit in the form of a grant, as determined by the North American Wetlands Conservation Council and the Migratory Bird Conservation Commission; is necessary to determine the eligibility and relative value of wetland projects; results in an approximate paperwork burden of 80 hours per application; and does not carry a premise of confidentiality. The information collections in this program will not be part of a system of records covered by the Privacy Act (5 U.S.C. 552(a)).

Starting October 1, 2003, applicants are required to provide a DUNS number when submitting applications for a Federal Government grant. Thus, this requirement will be in effect for the November 28, 2003, postmarking deadline of the Small Grants applications for 2004 funding. A DUNS number is a 9-digit unique identifier available from Dun and Bradstreet, either through the Web site at *http://www.dunandbradstreet.com* or by phone at 1.866.705.5711.

Dated: July 17, 2003.

Matt Hogan,

Acting Director, U.S. Fish and Wildlife Service.

[FR Doc. 03–19523 Filed 7–30–03; 8:45 am]

BILLING CODE 4310–55–P

DEPARTMENT OF THE INTERIOR

Bureau of Land Management

[ID–080–1030–PH]

Notice of Public Meeting, Upper Columbia-Salmon Clearwater Resource Advisory Council Meeting; Idaho

AGENCY: Bureau of Land Management, Interior.

ACTION: Notice of public meeting.

SUMMARY: In accordance with the Federal Land Policy and Management Act (FLPMA) and the Federal Advisory Committee Act of 1972 (FACA), the U.S. Department of the Interior, Bureau of Land Management (BLM) Upper Columbia-Salmon Clearwater (UCSC) District Resource Advisory Council (RAC) will meet as indicated below.

DATES: September 4, 2003 beginning at 8 a.m. Pacific Daylight Time and end at approximately 12:01 p.m. The public comment period will be from 11 a.m. to 12:01 p.m. The meeting will be held via conference call from the following Idaho BLM Offices:

- Coeur d'Alene—located at 1808 N. Third Street
- Salmon—located at 50 Highway 93 South
- Challis—located at 801 Blue Mountain Road
- Cottonwood—located at House 1, Butte Drive

RAC members may call from any location and participate in the conference call. The public may join in the conference call from any of the four locations listed above.

FOR FURTHER INFORMATION CONTACT: Stephanie Snook, RAC Coordinator, BLM UCSC District, 1808 N. Third Street, Coeur d'Alene, Idaho 83814 or telephone (208) 769–5004.

SUPPLEMENTARY INFORMATION: The 15-member Council advises the Secretary of the Interior, through the Bureau of Land Management, on a variety of planning and management issues associated with public land management in Idaho. The following topics will be discussed during the September 4th conference call:

- Sustaining Working Landscapes policy
- Idaho BLM Organization Refinement
- Status of RAC Nominations and review and approval of minutes from previous meetings

All meetings are open to the public. The public may present written comments to the Council at the Coeur d'Alene, Salmon, Challis or Cottonwood locations during the public comment period. Depending on the number of persons wishing to comment and time available, the time for individual oral comments may be limited. Individuals who plan to attend and need special assistance, such as sign language interpretation or other reasonable accommodations, should contact the BLM as provided above.

Dated: July 25, 2003.

Fritz U. Rennebaum,

District Manager.

[FR Doc. 03–19479 Filed 7–30–03; 8:45 am]

BILLING CODE 4310–GG–P

INTERNATIONAL TRADE COMMISSION

[Inv. No. 337–TA–491]

Certain Display Controllers and Products Containing Same; Notice of Commission Decision Not To Review an Initial Determination Amending the Complaint and Notice of Investigation

AGENCY: International Trade Commission.

ACTION: Notice.

SUMMARY: Notice is hereby given that the U.S. International Trade Commission has determined not to review the presiding administrative law judge's (''ALJ's'') initial determination (''ID'') (Order No. 5) amending the complaint and notice of investigation. The Commission understands the ALJ's statement summarizing complainant's argument, at page 2 of the ID, as implicitly including the following italicized language: ''In its motion, Genesis contends that it did not become aware of MStar's allegedly infringing product in the United States until April 18, 2003, when it purchased a Sony monitor containing an MStar MST9011 display controller from a retailer in California.''

FOR FURTHER INFORMATION CONTACT: Clara Kuehn, Esq., Office of the General Counsel, U.S. International Trade Commission, 500 E Street, SW, Washington, DC 20436, telephone (202) 205–3012. Copies of the public version of the ALJ's ID and all other nonconfidential documents filed in connection with this investigation are or will be available for inspection during official business hours (8:45 a.m. to 5:15 p.m.) in the Office of the Secretary, U.S. International Trade Commission, 500 E Street, SW, Washington, DC 20436, telephone 202–205–2000. General information concerning the Commission may also be obtained by accessing its Internet server (*http://www.usitc.gov*). The public record for this investigation may be viewed on the Commission's electronic docket (EDIS) at *http://edis.usitc.gov.* Hearing-impaired persons are advised that information on this matter can be obtained by contacting the Commission's TDD terminal on 202–205–1810.

SUPPLEMENTARY INFORMATION: The Commission instituted this investigation on April 14, 2003, based on a complaint filed on behalf of Genesis Microchip (Delaware) Inc. (''complainant'') of Alviso, Calif. 68 FR 17,964 (Apr. 14, 2003). The complaint, as supplemented, alleged violations of section 337 of the Tariff Act of 1930 in the importation into the United States, sale for importation, and sale within the United States after importation of certain display controllers and products containing same by reason of infringement of claims 13 and 15 of U.S. Patent No. 6,078,361 (''the 361 patent''); claims 19–22 of U.S. Patent No. 5,953,074 (''the '074 patent''); and claims 1 and 9 of U.S. Patent No. 6,177,922. The notice of investigation identified three respondents: Media Reality Technologies, Inc. of Taipei, Taiwan; Media Reality Technologies, Inc. of Sunnyvale, Calif. (collectively ''MRT''); and Trumpion Microelectronics, Inc. (''Trumpion'') of Taipei City, Taiwan. *Id.*

On May 30, 2003, complainant moved pursuant to Commission rule 210.14(b) to amend the complaint and notice of investigation to name MStar Semiconductor, Inc. (''MStar'') as an additional respondent and to assert against MStar claims 13 and 15 of the '361 patent, claims 15–22 of the '074 patent, and claims 1–3, 5, 6, 9, 12, 13, 16, 17, 33–36, 38, and 39 of U.S. Patent No. 5,739,867 (''the '867 patent). Thus, complainant sought to add claims 15–18 of the '074 patent and selected claims of the '867 patent to the investigation. On June 11, 2003, the Commission investigative attorney (''IA'') filed a response in support of the motion. On June 19, 2003, MStar filed an opposition to the motion. No responses were filed by MRT or Trumpion.

On June 20, 2003, the ALJ issued an ID (Order No. 5) granting the motion, thereby amending the complaint and notice of investigation to add claims 15–18 of the '074 patent and claims 1–3, 5, 6, 9, 12, 13, 16, 17, 33–36, 38, and 39 of the '867 patent, and to add MStar as an additional respondent. On June 26, 2003, MStar filed a petition for review of the ID. On July 3, 2003, responses opposing the petition were filed by the IA and complainant.

The authority for the Commission's determination is contained in section 337 of the Tariff Act of 1930, as amended (19 U.S.C. 1337), and in section 210.42 of the Commission's rules of practice and procedure (19 CFR 210.42).

Issued: July 18, 2003.

By order of the Commission.

Marilyn R. Abbott,

Secretary.

[FR Doc. 03–19437 Filed 7–30–03; 8:45 am]

BILLING CODE 7020–02–P

DEPARTMENT OF JUSTICE

Amended Clean Water Act Consent Decree With Icicle Seafoods, Inc.

AGENCY: Department of Justice.

ACTION: Notice of availability for public comment.

SUMMARY: Notice is hereby given that on July 18, 2003, an Amended Consent Decree in *United States* v. *Icicle Seafoods, Inc.,* Docket No. A03–0142 CV (JWS), was lodged with the United States District Court for the District of Alaska. In this action brought pursuant to section 309 of the Clean Water Act, as amended, 33 U.S.C. 1319, the United States has requested the imposition of civil penalties and injunctive relief on Icicle Seafoods, Inc. (Icicle). This action arose out of Icicle's operation of its Seward Fisheries Facility in Seward,

Alaska. The United States has alleged that Icicle discharged seafood processing waste from that facility to waters of the United States without a permit on various days in 2000 and 2001 and that the company failed to meet several of the discharge and reporting requirements of its authorization to discharge under the general National Pollutant Discharge Elimination System permit for seafood processors in Alaska (General Permit) on numerous days between January of 1998 and October of 2001, all in violation of section 301 of the Clean Water Act, 33 U.S.C. 1311.

Like the Consent Decree that was lodged with the court on June 26, 2003, the Amended Consent Decree requires Icicle to pay an $85,000 civil penalty and perform several measures of injunctive relief at the Seward Fisheries Facility. The first element of injunctive relief, requiring that Icicle render salmon heads and waste salmon carcasses into fish meal during the 2003 processing season and provide related reporting to the Environmental Protection Agency (EPA), allowed Icicle to barge that salmon processing waste to an EPA-approved at-sea discharge location when the fish meal plant was inoperative and Icicle could not freeze that waste or dispose of it by means other than marine discharge. The Amended Consent Decree allows an additional exception for at-sea discharges of such waste during the period July 11—July 31, 2003. This exception may be invoked if the fish meal plant is operating at full capacity and Icicle cannot freeze or dispose of salmon heads and waste salmon carcasses by means other than marine discharge. The other injunctive relief measures Icicle is to implement remain the same. They concern the reduction of foam generated by the transfer of fresh seafood from catcher vessels to the Seward Fisheries Facility for processing; means to prevent the introduction of fish hooks into the grinders used to chop seafood processing waste into ½'' pieces that can be discharged under the General Permit; the monitoring of the underwater waste pile created by discharges from the Seward Fisheries Facility prior to 2002; and improvement of internal operating procedures.

DATES: The Department of Justice will receive for a period of thirty (30) days from the date of this publication comments relating to the Consent Decree.

ADDRESSES: Comments should be addressed to the Assistant Attorney General, Environment and Natural Resources Division, United states Department of Justice and sent to 801 B Street, Suite 504, Anchorage, Alaska 99501–3657. Comments should refer to *United States* v. *Icicle Seafoods, Inc.,* D.J. Ref. #90–5–1–1–07395. During the public comment period, the Decree may be examined during business hours at the same address by contacting Lorraine Carter (907–271–5452) or on the following Department of Justice Web site, *http://www.usdoj.gov/enrd/open.html.* The Amended Consent Decree may also be examined at the Office of the Regional Counsel, EPA Region 10, 1200 Sixth Avenue, Seattle, Washington 98101, by contacting Meg Silver (206) 553–1476). A copy of the Amended Consent Decree may be obtained by contacting Lorraine Carter in writing at the address above or via electronic mail (*lorraine.carter@usdoj.gov*). In requesting a copy by mail, please enclose a check in the amount of $5.00 (25 cents per page reproduction cost) payable to the U.S. Treasury.

Authority: 28 CFR 50.7.

Robert E. Maher, Jr.,

Assistant Section Chief, Environmental Enforcement Section, Environment and Natural Resources Division.

[FR Doc. 03–19438 Filed 7–30–03; 8:45 am]

BILLING CODE 4410–15–M

DEPARTMENT OF JUSTICE

Notice of Lodging of Consent Decree Under the Clean Water Act

Pursuant to 28 CFR 50.7, notice is hereby given that on July 17, 2003, a proposed Consent Decree (''Consent Decree'') in *United States* v. *South Haven Sewer Works, Inc.,* Civil Action No. 2:03 CV 290, was lodged with the United States District Court for the Northern District of Indiana.

The United States' complaint in this action asserts claims against South Haven Sewer Works, Ind. (''South Haven'') for injunctive relief and civil penalties for violations of the Clean Water Act, 33 U.S.C. 1251 *et seq.* (the ''Act''), and a National Pollutant Discharge Elimination System Permit regulating discharges of pollutants into Salt Creek, from South Haven's privately owned wastewater treatment plant and sanitary sewer system in South Haven, Indiana.

The proposed Consent Decree requires South Haven to comply with the effluent limitations as well as all other requirements of South Haven's NPDES permit. In addition, the proposed Consent Decree requires South Haven to implement compliance measures valued at between $6 and $7 million, including: (i) Installation of monitoring and sampling devices and a standby power generator; (ii) construction of an improved outfall; (iii) identification and elimination of defects in the collection system and wastewater treatment plant that cause or contribute to bypasses and sanitary sewer overflows (''SSOs''); (iv) development and implementation or procedures for minimizing the impacts of SSOs on the environment and human health; and (v) development and implementation of a preventative maintenance program. The proposed Consent Decree also prohibits South Haven from accepting non-municipal waste and expanding its service area or sewer connections until it has met certain requirements. Under the proposed Consent Decree South Haven will also pay a civil penalty of $250,000.

The Department of Justice will receive for a period of thirty (30) days from the date of this publication comments relating to the proposed Consent Decree. Comments should be addressed to the Assistant Attorney General, Environment and Natural Resources Division, P.O. Box 7611, U.S. Department of Justice, Washington, DC 20044–7611, and should refer to *United States* v. *South Haven Sewer Works, Inc.,* D.J. Ref. 90–5–1–1–06888.

The proposed Consent Decree may be examined at the Office of the United States Attorney, 5400 Federal Plaza, Suite 1500, Hammond, Indiana 46320, and at U.S. EPA Region 5, 77 West Jackson Boulevard, Chicago, IL 60604. During the public comment period, the proposed Consent Decree may also be examined on the following Department of Justice Web site: *http://www.usdoj.gov/enrd/open.html.* A copy of the proposed Consent Decree may also be obtained by mail from the Consent Decree Library, P.O. Box 7611, U.S. Department of Justice, Washington, DC 20044–7611 or by faxing or e-mailing a request to Tonia Fleetwood (*tonia.fleetwood@usdoj.gov*), fax no. (202) 514–0097, phone confirmation number (202) 514–1547. In requesting a copy, please enclose a check in the amount of $14.75 (25 cents per page reproduction cost) payable to the U.S. Treasury.

William D. Brighton,

Assistant Chief, Environmental Enforcement Section, Environment and Natural Resources Division.

[FR Doc. 03–19439 Filed 7–30–03; 8:45 am]

BILLING CODE 4410–15–M

DEPARTMENT OF JUSTICE

Federal Bureau of Investigation

Agency Information Collection Activities: Current Collection; Comment Requested

ACTION: 60-day notice of information collection under review; flexible deployment assistance guide.

The Department of Justice, Federal Bureau of Investigation has submitted the following information collection request for review and clearance in accordance with the Paperwork Reduction Act of 1995. Office of Management and Budget approval is being sought for the information collection listed below. The proposed information collection is published to obtain comments from the public and affected agencies. Comments are encouraged and will be accepted for ''sixty days'' until September 29, 2003. This process is conducted in accordance with 5 CFR 1320.10.

If you have comments, especially on the estimated public burden or associated response time, suggestions, or need a copy of the proposed information collection instrument with instructions or additional information, please contact Richard Thompson, Federal Bureau of Investigation, U.S. Department of Justice, ESTS, 14800 Conference Center Drive, Suite 300, Chantilly, Virginia 20151.

Written comments and suggestions from the public and affected agencies concerning the proposed collection of information are encouraged. Your comments should address one or more of the following four points:

(1) Evaluate whether the proposed collection of information is necessary for the proper performance of the function of the agency, including whether the information will have the practical utility;

(2) Evaluate the accuracy of the agency's estimate of the burden of the proposed collection of information, including the validity of the methodology and assumptions used;

(3) Enhance the quality, utility, and clarity of the information to be collected; and

(4) Minimize the burden of the collection of information on those who are to respond, including through the use of appropriate automated, electronic, mechanical, or other technological collection techniques or other forms of information technology, *e.g.*, permitting electronic submission of responses.

Overview of this information:

(1) *Type of information collection:* Reinstatement, without change, of a previously approved collection for which approval has expired.

(2) *Title of the form/collection:* Flexible Deployment Assistance Guide.

(3) *Agency form number, if any, and the applicable component of the Department sponsoring the collection:* None. Federal Bureau of Investigation, United States Department of Justice.

(4) *Affected public who will be asked or required to respond, as well as a brief abstract:* Primary: Business or other for-profit. Other: None. The Flexible Deployment Assistance Guide has been developed to assist the telecommunications industry in meeting its obligations under the Communications Assistance for Law Enforcement Act 47 U.S.C. 1001–1010 (1994).

(5) *An estimate of the total number of respondents and the amount of time estimated for an average respondent to respond/reply:* The average time burden of the approximately 5,000 respondents to provide the information requested is approximately four hours and fifteen minutes.

(6) *An estimate of the total public burden (in hours) associated with the collection:* The total annual hour burden to provide the information requested by the Flexible Deployment Assistance Guide is approximately 21,250 hours.

If additional information is required contact: Brenda E. Dyer, Deputy Clearance Officer, United States Department of Justice, Justice Management Division, Policy and Planning Staff, Patrick Henry Building, Suite 1600, 601 D Street NW., Washington, DC 20530.

Dated: July 25, 2003.

Brenda E. Dyer,

Deputy Clearance Officer, Department of Justice.

[FR Doc. 03–19467 Filed 7–30–03; 8:45 am]

BILLING CODE 4410–02–P

DEPARTMENT OF JUSTICE

Office of Justice Programs

Agency Information Collection Activities: Proposed Collection; Comments Requested

ACTION: 60-Day notice of information collection under review: Semi-annual progress report for grants to encourage arrest policies and enforcement of protection orders program.

The Department of Justice (DOJ), Office of Justice Programs (OJP), has submitted the following information collection request to the Office of Management and Budget (OMB) for review and approval in accordance with the Paperwork Reduction Act of 1995. The proposed information collection is published to obtain comments from the public and affected agencies. Comments are encouraged and will be accepted for ''sixty days'' until September 29, 2003. This process is conducted in accordance with 5 CFR 1320.10.

If you have comments especially on the estimated public burden or associated response time, suggestions, or need a copy of the proposed information collection instrument with instructions or additional information, please contact Cathy Poston, Attorney/Advisor, Office of Violence Against Women, Office of Justice Programs, 810 7th Street NW., Washington, DC 20531; or facsimile at (202) 305–2589.

Written comments and suggestions from the public and affected agencies concerning the proposed collection of information are encouraged. Your comments should address one or more of the following four points:

(1) Evaluate whether the proposed collection of information is necessary for the proper performance of the functions of the agency, including whether the information will have practical utility;

(2) Evaluate the accuracy of the agency's estimate of the burden of the proposed collection of information, including the validity of the methodology and assumptions used;

(3) Enhance the quality, utility, and clarity of the information to be collected; and

(4) Minimize the burden of the collection of information on those who are to respond, including through the use of appropriate automated, electronic, mechanical, or other technological collection techniques or other forms of information technology, *e.g.*, permitting electronic submission of responses.

Overview of this information collection:

(1) *Type of information collection:* New collection.

(2) *Title of the form/collection:* Semi-Annual Progress Report for Grants to Encourage Arrest Policies and Enforcement of Protection Orders Program.

(3) *Agency form number, if any, and the applicable component of the Department of Justice sponsoring the collection:* Form Number: none. Office on Violence Against Women, Office of Justice Programs, United States Department of Justice.

(4) *Affected public who will be asked or required to respond, as well as a brief*

abstract: Primary: The affected public includes approximately 200 grantees of the Grants to Encourage Arrest Policies and Enforcement of Protection Orders Program (Arrest Program) whose eligibility is determined by statute. The Arrest Program was authorized through the Violence Against Women Act (VAWA) and reauthorized and amended by the Violence Against Women Act of 2000 (VAWA 2000). The Arrest Program promotes mandatory or pro-arrest policies and encourages jurisdictions to treat domestic violence as a serious crime, establish coordinated community responses and facilitate the enforcement of protection orders. By statute, eligible grantees for the Arrest Program are States, Indian tribal governments, State and local courts including juvenile courts, tribal courts, and units of local government. For the purpose of the Program, a unit of local government is any city, county, township, town, borough, parish, village, or other general-purpose political subdivision of a State; an Indian tribe that performs law enforcement functions as determined by the Secretary of the Interior; or, for the purpose of assistance eligibility, any agency of the District of Columbia government or the United States Government performing law enforcement functions in and for the District of Columbia, and any Trust Territory of the U.S.

(5) *An estimate of the total number of respondents and the amount of time estimated for an average respondent to respond:* It is estimated that it will take the 200 respondents (Arrest Program grantees) approximately one hour to complete a semiannual progress report. The semiannual progress report is divided into sections that pertain to the different types of activities that grantees may engage in, *i.e.*, law enforcement agencies, prosecutors' offices, courts, victim services agencies, *etc.* An Arrest Program grantee will be required to complete those sections of the form that pertain to their own specific activities.

(6) *An estimate of the total public burden (in hours) associated with the collection:* The total estimated annual hour burden to complete the data collection forms is 400 hours. Two hundred grantees will complete a form twice a year with an estimated completion time of one hour per form.

If additional information is required, contact Brenda E. Dyer, Deputy Clearance Officer, United States Department of Justice, Justice Management Division, Policy and Planning Staff, Patrick Henry Building, Suite 1600, 601 D Street NW., Washington, DC 20530.

Dated: July 25, 2003.

Brenda E. Dyer,

Deputy Clearance Officer, Department of Justice.

[FR Doc. 03–19449 Filed 7–30–03; 8:45 am]

BILLING CODE 4410–18–P

DEPARTMENT OF LABOR

Occupational Safety and Health Administration

Maritime Advisory Committee on Occupational Safety and Health

AGENCY: Occupational Safety and Health Administration (OSHA), Labor.

ACTION: Reestablishment of the Maritime Advisory Committee for Occupational Safety and Health (MACOSH); Appointment of Committee Members.

SUMMARY: The Secretary of Labor has re-established the charter of the Maritime Advisory Committee for Occupational Safety and Health (MACOSH), which expired on March 10, 2002. The Committee has been chartered for a two year term. The purpose of MACOSH is to provide advice for the Assistant Secretary of Labor for Occupational Safety and Health (Assistant Secretary) on all matters relevant to the safety and health of workers in that sector. The Assistant Secretary will seek the advice of this Committee, which consists of a broad range of representatives from the maritime industry, on activities in the maritime industry related to the Agency's overall priorities, including: Strong, fair, and effective enforcement; expanded compliance assistance, guidance, and outreach; expanded partnerships and voluntary programs; leadership in the national dialogue on occupational safety and health; and regulatory matters affecting the maritime industry, as appropriate. The Committee is diverse and balanced, both in terms of segments of the maritime industry represented (*i.e.,* shipyard and marine cargo handling industries), and in the views or interests represented by the members (employer, employee, government organizations with interests or activities related to the maritime industry, the states, and the public). The Agency expects to announce, in the near future, a notice of the first meeting of the new Committee. The public is encouraged to attend these meetings.

Mail comments, views, or statements in response to this notice to Paul Bolon, Director, Office of Maritime, OSHA, U.S. Department of Labor, Room N–3609, 200 Constitution Avenue, NW., Washington, DC 20210. Phone: (202) 693–2086; Fax: (202) 693–1667.

FOR FURTHER INFORMATION CONTACT: Bonnie Friedman, OSHA, Office of Public Affairs, Room N–3647, U.S. Department of Labor, 200 Constitution Avenue, NW., Washington, DC 20210; Telephone: (202) 693–1999.

SUPPLEMENTARY INFORMATION:

I. Background

On June 21, 2002, the Secretary of Labor announced her intention to re-establish a Maritime Advisory Committee for Occupational Safety and Health (67 FR 42292). The maritime industries have historically had a high incidence of illnesses and injuries in their workforces. The types of work performed can be quite different in various parts of the industries, ranging from steel fabrication and outfitting operations in shipyards to intermodal container handling or grain handling in longshoring operations. OSHA has targeted the maritime industries for special attention because of the incidence of illnesses and injuries and the specialized nature of much of the work. This targeting has included development of guidance and outreach materials specific to the industry, as well as rulemaking to update requirements and other activities to help focus actions on the industry and to help reduce the occurrence of illnesses and injuries in these industries. This Committee will be used to advise OSHA on these ongoing activities, as well as in any new areas in which the Agency seeks to pursue or expand its programs and projects to further address these specific needs. The advice of the Committee will help the Agency in terms of substantive input on conditions in the industry, ideas that may be implemented to reduce illnesses and injuries, and feedback on Agency initiatives in the maritime industry.

II. Establishment

The Committee will function solely as an advisory body, and in compliance with the provisions of Section 7(b) of the OSH Act (29 U.S.C. 656), the Federal Advisory Committee Act (5 U.S.C. App. 2), and 41 CFR part 102–3.

III. Appointment of Committee Members

Fifty-three nominations of highly qualified individuals were received in response to the Agency's request for nominations. The Secretary has selected the following individuals who have a wide range of experience concerning the issues to be examined by the Committee:

Jim Burgin, National Maritime Safety Association;

Keith D. Cameron, U.S. Coast Guard;

Albert Cernadas, International Longshore Association;
Michael Flynn, International Association of Machinists and Aerospace Workers;
Mike E. Freese, International Longshore and Warehouse Union;
Stephen D. Hudock, NIOSH;
William McGill, International Brotherhood of Electrical Workers;
Captain John McNeill, Pacific Maritime Association;
Dan Nadeau, Bath Iron Works;
Captain Teresa Preston, Atlantic Marine;
James Thornton, Northrop Grumman Newport News Shipyard; and
Earnest Whelan, International Union of Operating Engineers.

IV. Authority

This notice was prepared under the direction of John L. Henshaw, Assistant Secretary for Occupational Safety and Health. It is issued under 7(b) of the OSH Act (29 U.S.C. 656), the Federal Advisory Committee Act (FACA) (5 U.S.C. App. 2), GSA's FACA Regulations (41 CFR part 102–3), and DLMS 3 Chapter 1600.

Signed at Washington, DC, this 28th day of July, 2003.

John L. Henshaw,

Assistant Secretary of Labor.

[FR Doc. 03–19514 Filed 7–30–03; 8:45 am]

BILLING CODE 4510–26–M

MERIT SYSTEMS PROTECTION BOARD

Agency Information Collection Activities; Proposed Collection

AGENCY: Merit Systems Protection Board.

ACTION: Notice.

SUMMARY: In compliance with the Paperwork Reduction Act (44 U.S.C. 3501 *et. seq.*), this notice announces that the Merit Systems Protection Board (MSPB or the Board) has forwarded to the Office of Management and Budget (OMB) for approval the following proposed information collection: e-Appeal, a new electronic application for filing an appeal with the Board, and MSPB Form 185 (7/03), a revised MSPB paper Appeal Form.

On September 4, 2002, MSPB published in the **Federal Register** (67 FR 56600) a notice of its intent to submit this proposed information collection to OMB for approval. The notice advised the public that MSPB had revised and expanded its approved MSPB Appeal Form (Optional Form 283, OMB Control Number 3124–0009) to create a new MSPB Appeal Forms Package. The expanded package of forms included additional questions necessitated by the enactment of new laws and changes in the Board's regulations since the MSPB Appeal Form was last revised in 1994. The notice further advised the public that MSPB planned to develop a new electronic application for filing an appeal with the Board, based on the MSPB Appeal Forms Package. Public comments suggested that, in paper form, the expanded MSPB Appeal Forms Package was too long and too complicated, particularly for *pro se* appellants. The comments also noted that the majority of appellants would not need many of the forms in the package. Accordingly, MSPB revised its approach to this information collection.

As now proposed, this information collection will consist of two MSPB-provided options for filing an appeal with the Board. The first option, e-Appeal, is an electronic application based on the comprehensive MSPB Appeal Forms Package. It will permit an appellant to file any type of appeal over which the Board has jurisdiction and to raise any additional claims that the Board may consider in the particular type of appeal being filed. An appellant will access the e-Appeal application via the MSPB Web site and will be guided through the process in an interview format. The questions presented to each appellant will be those applicable to the particular type of appeal being filed.

The second option is a simplified paper MSPB Appeal Form (MSPB Form 185). This form will include only questions applicable to the majority of appeals filed with the Board, *i.e.*, appeals of an agency personnel action or a decision affecting the appellant's retirement rights or benefits. Other claims, such as claims that the appealed action or decision was the result of prohibited discrimination or that the agency committed harmful procedural error in taking it, can be raised with the appeal if the appellant provides the required information to support each claim as an attachment. (Alternatively, such claims can be raised later in the process.) The form can also be used to file an Individual Right of Action (IRA) appeal under the Whistleblower Protection Act, a Uniformed Services Employment and Reemployment Rights Act (USERRA) appeal, or a Veterans Employment Opportunities Act (VEOA) appeal if the appellant provides the additional information required for those types of appeals as an attachment.

The MSPB Form 185 will replace the current OF–283 and will be the form that an agency provides when it takes an action or makes a decision that is appealable to the Board. The majority of appellants will be able to file their appeals using the simplified MSPB Form 185 without having to provide additional information as an attachment. Use of the form is not mandatory. An appellant who chooses to file on paper may do so in any written format, including letter form, as long as the appeal provides the information required by the Board's regulations and otherwise complies with those regulations.

The two MSPB-provided options for filing an appeal with the Board are available for review on the MSPB Web site at *http://www.mspb.gov/e-appeal.html*.

In this regard, we are soliciting comments on the public reporting burden. The reporting burden for this collection of information is estimated to vary from 20 minutes to 4 hours per response, with an average of 60 minutes, including time for reviewing instructions, searching existing data sources, gathering and maintaining the data needed, and completing and reviewing the collection of information.

ESTIMATED ANNUAL REPORTING BURDEN

5 CFR section	Annual number of respondents	Frequency per response	Total annual responses	Hours per response (average)	Total hours
1201, 1208 and 1209	6,300	1	6,300	1	6,300

Send comments regarding the burden estimate, or any other aspect of the information collection, including suggestions for reducing the burden, to the address shown below. Please refer to

OMB Control No. 3124–0009 in any correspondence.

DATES: Comments must be received on or before September 2, 2003.

ADDRESSES: Comments concerning the paperwork burden should be addressed to the Office of Information and Regulatory Affairs, Office of Management and Budget, Attention: Desk Officer for MSPB, 725 17th Street NW., Washington, DC 20503, with a copy to Mr. Arlin Winefordner, Merit Systems Protection Board, 1615 M Street, NW., Washington, DC 20419 (or by e-mail to *Arlin.Winefordner@mspb.gov*).

Dated: July 25, 2003.

Matthew Shannon,

Counsel to the Clerk of the Board.

[FR Doc. 03–19454 Filed 7–30–03; 8:45 am]

BILLING CODE 7400–01–U

NATIONAL AERONAUTICS AND SPACE ADMINISTRATION

[Notice: 03–093]

Notice of Information Collection

AGENCY: National Aeronautics and Space Administration (NASA).

ACTION: Notice of information collection.

SUMMARY: The National Aeronautics and Space Administration, as part of its continuing effort to reduce paperwork and respondent burden, invites the general public and other Federal agencies to take this opportunity to comment on proposed and/or continuing information collections, as required by the Paperwork Reduction Act of 1995 (Pub. L. 104–13, 44 U.S.C. 3506(c)(2)(A)).

DATES: All comments should be submitted within 60 calendar days from the date of this publication.

ADDRESSES: All comments should be addressed to Mr. Harry Lupuloff, Code GP, National Aeronautics and Space Administration, Washington, DC 20546–0001.

FOR FURTHER INFORMATION CONTACT: Ms. Nancy Kaplan, NASA Reports Officer, (202) 358–1372.

Title: Application for a Patent License.

OMB Number: 2700–0039.

Type of review: Extension of a currently approved collection.

Need and Uses: An application for a license under a patent or a patent application owned by NASA is required by 35 U.S.C. 209 and 37 CFR part 404. The information supplied by an applicant for a patent license is used NASA to make agency determinations that NASA should either grant or deny a request for a patent license, and whether the license should be exclusive, partially exclusive, or nonexclusive.

Affected Public: Business or other for-profit; Individuals or households.

Number of Respondents: 85.

Responses Per Respondent: 1.

Annual Responses: 85.

Hours Per Request: 8.

Annual Burden Hours: 680.

Frequency of Report: Once.

Patricia L. Dunnington,

Chief Information Officer, Office of the Administrator.

[FR Doc. 03–19531 Filed 7–30–03; 8:45 am]

BILLING CODE 7510–01–P

NATIONAL AERONAUTICS AND SPACE ADMINISTRATION

[Notice: 03–092]

Notice of Information Collection

AGENCY: National Aeronautics and Space Administration (NASA).

ACTION: Notice of information collection.

SUMMARY: The National Aeronautics and Space Administration, as part of its continuing effort to reduce paperwork and respondent burden, invites the general public and other Federal agencies to take this opportunity to comment on proposed and/or continuing information collections, as required by the Paperwork Reduction Act of 1995 (Pub. L. 104–13, 44 U.S.C. 3506(c)(2)(A)).

DATES: All comments should be submitted within 60 calendar days from the date of this publication.

ADDRESSES: All comments should be addressed to Mr. Harry Lupuloff, Code GP, National Aeronautics and Space Administration, Washington, DC 20546–0001.

FOR FURTHER INFORMATION CONTACT: Ms. Nancy Kaplan, NASA Reports Officer, (202) 358–1372.

Title: Patent License Report.

OMB Number: 2700–0010.

Type of review: Extension of a currently approved collection.

Need and Uses: All federal agencies are authorized under 35 U.S.C. 209 and 37 CFR 404.5 to require patent licensees to periodically submit reports which describe the steps taken to achieve and maintain practical application of the licensed inventions. The information is used by NASA attorneys and technology transfer specialists to determine if a licensee is achieving and maintaining practical application of the licensed inventions as required by its license agreement.

Affected Public: Business or other for-profit; Individuals or households.

Number of Respondents: 90.

Responses Per Respondent: 1.

Annual Responses: 90.

Hours Per Request: ½ hour.

Annual Burden Hours: 45.

Frequency of Report: Annually.

Patricia L. Dunnington,

Chief Information Officer, Office of the Administrator.

[FR Doc. 03–19532 Filed 7–30–03; 8:45 am]

BILLING CODE 7510–01–P

NATIONAL AERONAUTICS AND SPACE ADMINISTRATION

[Notice 03–091]

Notice of Information Collection

AGENCY: National Aeronautics and Space Administration (NASA).

ACTION: Notice of information collection.

SUMMARY: The National Aeronautics and Space Administration, as part of its continuing effort to reduce paperwork and respondent burden, invites the general public and other Federal agencies to take this opportunity to comment on proposed and/or continuing information collections, as required by the Paperwork Reduction Act of 1995 (Pub. L. 104–13, 44 U.S.C. 3506(c)(2)(A)).

DATES: All comments should be submitted on or before September 29, 2003.

ADDRESSES: All comments should be addressed to Ms. Celeste Dalton, Code HK, National Aeronautics and Space Administration, Washington, DC 20546–0001.

FOR FURTHER INFORMATION CONTACT: Ms. Nancy Kaplan, NASA Reports Officer, (202) 358–1372.

Title: Uncompensated Overtime.

OMB Number: 2700–0080.

Type of review: Extension of a currently approved collection.

Need and Uses: Information collected is required to evaluate the use of ''uncompensated overtime'' in bids and proposals submitted to NASA for the award of contracts for technical and professional services in support of NASA's mission and in response to contractual requirements. The requirement is based on Section 834 of PL 101–510 (10 U.S.C. 2331) and FAR 37.115.

Affected Public: Business or other for-profit.

Number of Respondents: 300.

Responses Per Respondent: 1.

Annual Responses: 300.

Hours Per Request: 3.25.
Annual Burden Hours: 975.
Frequency of Report: On occasion.

Patricia L. Dunnington,
Chief Information Officer, Office of the Administrator.

[FR Doc. 03–19533 Filed 7–30–03; 8:45 am]

BILLING CODE 7510–01–P

NATIONAL AERONAUTICS AND SPACE ADMINISTRATION

[Notice: 03–090]

Notice of Information Collection

AGENCY: National Aeronautics and Space Administration (NASA).

ACTION: Notice of information collection.

SUMMARY: The National Aeronautics and Space Administration, as part of its continuing effort to reduce paperwork and respondent burden, invites the general public and other Federal agencies to take this opportunity to comment on proposed and/or continuing information collections, as required by the Paperwork Reduction Act of 1995 (Pub. L. 104–13, 44 U.S.C. 3506(c)(2)(A)).

DATES: All comments should be submitted on or before September 29, 2003.

ADDRESSES: All comments should be addressed to Ms. Celeste Dalton, Code HK, National Aeronautics and Space Administration, Washington, DC 20546–0001.

FOR FURTHER INFORMATION CONTACT: Ms. Nancy Kaplan, NASA Reports Officer, (202) 358–1372.

Title: Mentor-Protege Program-Small Business and Small Disadvantaged Business Concerns.

OMB Number: 2700–0078.

Type of review: Extension of a currently approved collection.

Need and Uses: Information is required by NASA to monitor the performance and progress of both the mentor and the protege firms in this developmental assistance program, as delineated in the Mentor-Protege Agreement. Semi-annual reports will serve as an internal control measure to achieve Agency objectives and by serving as a check and balance against undesired action or consequences. This requirement is codified at 48 CFR subpart 1819.72.

Affected Public: Business or other for-profit.

Number of Respondents: 26.
Responses Per Respondent: 2.
Annual Responses: 52.
Hours Per Request: 1.5.
Annual Burden Hours: 78.
Frequency of Report: Semi-annually.

Patricia L. Dunnington,
Chief Information Officer, Office of the Administrator.

[FR Doc. 03–19534 Filed 7–30–03; 8:45 am]

BILLING CODE 7510–01–P

NATIONAL AERONAUTICS AND SPACE ADMINISTRATION

[Notice 03–089]

Notice of Information Collection

AGENCY: National Aeronautics and Space Administration (NASA).

ACTION: Notice of information collection.

SUMMARY: The National Aeronautics and Space Administration, as part of its continuing effort to reduce paperwork and respondent burden, invites the general public and other Federal agencies to take this opportunity to comment on proposed and/or continuing information collections, as required by the Paperwork Reduction Act of 1995 (Pub. L. 104–13, 44 U.S.C. 3506(c)(2)(A)).

DATES: All comments should be submitted on or before September 29, 2003.

ADDRESSES: All comments should be addressed to Ms. Celeste Dalton, Code HK, National Aeronautics and Space Administration, Washington, DC 20546–0001.

FOR FURTHER INFORMATION CONTACT: Ms. Nancy Kaplan, NASA Reports Officer, (202) 358–1372.

Title: Patents—Grants and Cooperative Agreements.

OMB Number: 2700–0048.

Type of Review: Extension of a currently approved collection.

Need and Uses: The information collected is required to ensure the proper disposition of rights to inventions made in the course of NASA-funded research. The requirement is codified in 14 CFR 1260.28.

Affected Public: Not-for-profit institutions; business or other for-profit; State, local, or tribal government.

Number of Respondents: 9082.
Responses Per Respondent: 1.
Annual Responses: 9082.
Hours Per Request: 20–60 minutes each.
Annual Burden Hours: 16,150.
Frequency of Report: Annually.

Patricia L. Dunnington,
Chief Information Officer, Office of the Administrator.

[FR Doc. 03–19535 Filed 7–30–03; 8:45 am]

BILLING CODE 7510–01–P

NATIONAL AERONAUTICS AND SPACE ADMINISTRATION

[Notice 03–088]

Notice of Prospective Patent License

AGENCY: National Aeronautics and Space Administration.

ACTION: Notice of prospective patent license.

SUMMARY: NASA hereby gives notice that Schaffer Test Products, Inc. has applied for a partially exclusive patent license to practice the invention described and claimed in KSC–12220 entitled ''Current Signature Sensor,'' which is assigned to the United States of America as represented by the Administrator of the National Aeronautics and Space Administration. Written objections to the prospective grant of a license should be sent to Randall M. Heald, Assistant Chief Counsel/Patent Counsel, and John F. Kennedy Space Center.

DATES: Responses to this notice must be received within August 15, 2003.

FOR FURTHER INFORMATION CONTACT: Randall M. Heald, Assistant Chief Counsel/Patent Counsel, John F. Kennedy Space Center, Mail Code: CC–A, Kennedy Space Center, FL 32899, telephone (321) 867–7214.

Dated: July 25, 2003.

Robert M. Stephens,
Deputy General Counsel.

[FR Doc. 03–19536 Filed 7–30–03; 8:45 am]

BILLING CODE 7510–01–P

NUCLEAR REGULATORY COMMISSION

Agency Information Collection Activities: Submission for the Office of Management and Budget (OMB) Review; Comment Request

AGENCY: U.S. Nuclear Regulatory Commission (NRC).

ACTION: Notice of the OMB review of information collection and solicitation of public comment.

SUMMARY: The NRC has recently submitted to OMB for review the following proposal for the collection of information under the provisions of the Paperwork Reduction Act of 1995 (44 U.S.C. Chapter 35). The NRC hereby informs potential respondents that an agency may not conduct or sponsor, and that a person is not required to respond to, a collection of information unless it displays a currently valid OMB control number.

1. *Type of submission, new, revision, or extension:* Extension.

2. *The title of the information collection:* Policy Statement on Cooperation with States at Commercial Nuclear Power Plants and Other Production or Utilization Facilities.

3. *The form number if applicable:* Not applicable.

4. *How often the collection is required:* On occasion—when a State wishes to observe NRC inspections or perform inspections for NRC.

5. *Who will be required or asked to report:* Those States interested in observing or performing inspections.

6. *An estimate of the number of annual responses:* Maximum of 50, although not all States have participated in the program.

7. *The estimated number of annual respondents:* Maximum of 50, although not all States have participated in the program.

8. *An estimate of the total number of hours needed annually to complete the requirement or request:* An average estimate of 10 hours per State or 500 hours if all States participated in the program.

9. *An indication of whether Section 3507(d), Pub. L. 104–13 applies:* N/A.

10. *Abstract:* States wishing to enter into an agreement with NRC to observe or participate in NRC inspections at nuclear power facilities are requested to provide certain information to the NRC to ensure close cooperation and consistency with the NRC inspection program, as specified by the Commission's Policy on Cooperation with States at Commercial Nuclear Power Plants and Other Nuclear Production or Utilization Facilities.

A copy of the final supporting statement may be viewed free of charge at the NRC Public Document Room, One White Flint North, 11555 Rockville Pike, Room O–1 F21, Rockville, MD 20852. OMB clearance requests are available at the NRC Worldwide Web Site: *http://www.nrc.gov/public-involve/doc-comment/omb/index.html.* The document will be available on the NRC home page site for 60 days after the signature date of this notice.

Comments and questions should be directed to the OMB reviewer listed below by September 2, 2003. Comments received after this date will be considered if it is practical to do so, but assurance of consideration cannot be given to comments received after this date. Bryon Allen, Office of Information and Regulatory Affairs (3150–0163), NEOB–10202, Office of Management and Budget, Washington, DC 20503.

Comments can also be submitted by telephone at (202) 395–3087.

The NRC Clearance Officer is Brenda Jo Shelton, 301–415–7233.

Dated at Rockville, Maryland, this 24th day of July, 2003.

For the Nuclear Regulatory Commission.

Brenda Jo Shelton,

NRC Clearance Officer, Office of the Chief Information Officer.

[FR Doc. 03–19488 Filed 7–30–03; 8:45 am]

BILLING CODE 7590–01–P

OFFICE OF MANAGEMENT AND BUDGET

Agency Information Collection Activities: Submission for the Office of Management and Budget (OMB) Review; Comments Requested

AGENCY: Office of Management and Budget (OMB).

ACTION: Notice of the OMB review of information collection and solicitation of public comment.

SUMMARY: The Office of Federal Financial Management, Office of Management and Budget (OMB) has recently submitted to OMB for review the following proposal for collection of information under the Paperwork Reduction Act of 1995 (44 U.S.C. Chapter 35).

DATES: Interested persons are invited to submit comments on or before September 2, 2003.

FOR FURTHER INFORMATION CONTACT: Written comments should be submitted to the Office of Information and Management Affairs, Attention: Lauren Wittenberg via fax at (202) 395–6974 or by e-mail at: *Lauren_Wittenberg@omb.eop.gov.*

SUPPLEMENTARY INFORMATION:

A. Background

In a **Federal Register** notice published April 8, 2003 [68 FR 17090], OMB proposed using as the standard set of data elements and definitions for applications as the existing Standard Form 424 (SF–424), Application for Federal Assistance, data elements and definitions and five additional data elements. After consultation with the public, OMB is adding four of the five proposed data elements to the SF–424 and intends to establish this data set as the standard for grant applications. The use of the standard data elements will be implemented through the electronic grants application process of Grants.gov for E–APPLY, which is scheduled for October 2003 deployment and is part of the implementation of the Federal Financial Assistance Management Improvement Act of 1999 (Pub. L. 106–107).

Based upon the 22 comments received, OMB has determined there is a need for further evaluation of the comments regarding several matters including the proposed assurance language, ''Type of Applicant'' information, and the budget section of the SF–424. Therefore, OMB is requesting the SF–424A, SF–424B, SF–424C and SF–424D be extended while these comments are being considered and addressed. OMB is requesting a revision to the SF–424 to add four data elements (DUNS number; e-mail address; facsimile number; and Applicant Type, Not-for-Profit). In addition, OMB recognizes that a transition period is needed to provide agencies time to adapt their applications to the revised SF–424 form and phase out the use of the old forms; OMB is seeking a transition period. Upon completion of the analysis of the comments and recommendations from the grants community, the SF–424 suite of forms will be revised accordingly. OMB will publish a new 60-day notice to solicit comments on the revised SF–424 suite of forms.

B. Comments and Responses

OMB received 22 comments on the proposed standard set of data elements and the proposed assurance statement. Comments were received from 11 Federal agencies, four non-profit organizations, two state governments, four universities and university-related organizations, and one individual. Overall the comments supported the establishment of application data standards and indicated there is still a need for more evaluation and consideration of the comments to ensure a well-defined SF–424 is available for use.

A number of comments received suggest further analysis is needed for clarification or the addition of more contact points to the forms. In addition, comments submitted by Federal agencies identified the need for additional ''Type of Applicant'' data and also suggested alignment to other Federal sources, *e.g.*, Catalog of Federal Domestic Assistance (CFDA) and the Financial Assistance Award Data System (FAADS). OMB will evaluate these comments and conduct an analysis on ''Type of Applicant'' information. The analysis must be done in context with the process of applying for Federal assistance to ensure definitions and applicant data are consistent. The comments will be reviewed, addressed and submitted for public comment.

Some Federal comments focused on changing the budget format of the SF–424 based upon Federal program needs. Comments from the public sector

recommended more consistency between financial accounting terms and development of budget for grant applications. The comments are significant enough that a separate evaluation needs to be done to determine if the budget categories and forms need to be adjusted to meet the needs of the grants community. The review shall determine what action or change, if any, may be made to the SF–424A and SF–424C. Any change would be reflected in a proposed notice requesting public comment.

The proposed consolidated assurance language included on the SF–424, as proposed in the April 8, 2003 **Federal Register** notice, raised several significant comments. These comments are being evaluated separately and will be addressed in a separate notice for public comment. The assurance language is currently found on the SF–424B and SF–424D and can be considered separately and will have no impact upon the implementation of the SF–424 for the October E–APPLY deployment. OMB is beginning the process of review of the assurance language at this time and will submit the proposed resolution for public comment.

Action to further evaluate the comments is being undertaken by OMB. It is the intention of OMB to continue to work with the public and Federal agencies to address the comments and to ensure the Federal government is developing standard data application packages that are simplified and streamlined in a manner intended by Pub. L. 106–107.

Sheila O. Conley,

Acting Deputy Controller.

[FR Doc. 03–19510 Filed 7–30–03; 8:45 am]

BILLING CODE 3110–01–P

OFFICE OF MANAGEMENT AND BUDGET

Agency Information Collection Activities: Submission for the Office of Management and Budget (OMB) Review; Comments Requested

AGENCY: Office of Management and Budget (OMB).

ACTION: Notice of the OMB review of information collection and solicitation of public comment.

SUMMARY: The Office of Federal Financial Management, Office of Management and Budget (OMB) has recently submitted to OMB for review the following proposal for collection of information under the Paperwork Reduction Act of 1995 (44 U.S.C. Chapter 35).

DATES: Interested persons are invited to submit comments on or before September 2, 2003.

FOR FURTHER INFORMATION CONTACT: Written comments should be submitted to the Office of Information and Management Affairs, Attention: Lauren Wittenberg via fax at (202) 395–6974 or by email at *Lauren_Wittenberg@omb.eop.gov.*

SUPPLEMENTARY INFORMATION:

A. Background

In a **Federal Register** notice published April 8, 2003 [68 FR 17091–17105], OMB proposed consolidating several existing financial reporting forms (the SF–269, 269A, 272 and 272A) into a single financial report to be used by the Federal agencies and grant recipients. The purpose of the consolidated Federal Financial Report (FFR) is to provide grant recipients with a standard format and consistent requirements across agencies in reporting financial information for grants and cooperative agreements. The Federal grant-making agencies, after public consultation with the grantee community, jointly developed this form as part of the implementation of the Federal Financial Assistance Management Improvement Act of 1999 (Pub. L. 106–107).

Based on the nearly 200 comments received, OMB has determined there is a need for further evaluation of the issues involved in implementing the new form. Therefore, OMB has requested that the SF–269, 269A, 272 and 272A be extended while these comments are being considered and addressed. We also recognize that a transition period will be necessary to provide agencies and grantees with time to adapt their processes to the new form and phase out the use of old ones. When the FFR is complete, the SF–269, 269A, 272 and 272A will continue to be accepted for a period of time after the FFR has been approved. OMB will publish a new 60-day notice to solicit comments on the updated FFR and instructions when it is closer to being finalized.

B. Comments and Responses

During the public comment period 198 comments were received. Federal agencies submitted 70 comments. State, local, tribal and nonprofit organizations submitted 115 comments, and universities provided 13 comments. Responses to general concerns expressed in the comments are provided.

Comments received from a number of Federal agencies require further analysis. In many instances, Federal agencies were concerned with the process of automating the form. More analysis needs to be done to understand what changes are needed to Federal payment systems so that they can accept the new form electronically. Sufficient time is needed to ensure the FFR is fully automated before the existing forms are phased out.

Many comments indicated there is a need for further evaluation of the information required and the proposed instructions. Further consideration of these comments is needed to ensure that the form is streamlined and the instructions are simplified in the manner intended by Pub. L. 106–107. OMB will continue to work with the Federal agencies in addressing these concerns.

Sheila O. Conley,

Deputy Controller.

[FR Doc. 03–19511 Filed 7–30–03; 8:45 am]

BILLING CODE 3110–01–P

OFFICE OF PERSONNEL MANAGEMENT

Submission for OMB Review; Comment Request for Review of a Revised Information Collection: RI 25–41

AGENCY: Office of Personnel Management.

ACTION: Notice.

SUMMARY: In accordance with the Paperwork Reduction Act of 1995 (Pub. L. 104–13, May 22, 1995), this notice announces that the Office of Personnel Management (OPM) has submitted to the Office of Management and Budget (OMB) a request for review of a revised information collection. RI 25–41, Initial Certification of Full-Time School Attendance, is used to determine whether a child is unmarried and a full-time student in a recognized school. OPM must determine this in order to pay survivor annuity benefits to children who are age 18 or older.

Approximately 1,200 RI 25–41 forms are completed annually. It takes approximately 90 minutes to complete the form. The annual burden is 1,800 hours.

For copies of this proposal, contact Mary Beth Smith-Toomey on (202) 606–8358, FAX (202) 418–3251, or via e-mail to *mbtoomey@opm.gov*. Please include a mailing address with your request.

DATES: Comments on this proposal should be received by September 2, 2003.

ADDRESSES: Send or deliver comments to—

Ronald W. Melton, Chief, Operations Support Group, Center for Retirement and Insurance Services, U.S. Office of Personnel Management, 1900 E Street, NW., Room 3349, Washington, DC 20415–3540;

and

Allison Eydt, OPM Desk Officer, Office of Information & Regulatory Affairs, Office of Management and Budget, New Executive Office Building, NW., Room 10235, Washington, DC 20503.

For Information Regarding Administrative Coordination— Contact: Cyrus S. Benson, Team Leader, Publications Team, Center for Retirement and Insurance Services, RIS Support Services/Support Group, (202) 606–0623.

U.S. Office of Personnel Management.

Kay Coles James,

Director.

[FR Doc. 03–19469 Filed 7–30–03; 8:45 am]

BILLING CODE 6325–50–P

SECURITIES AND EXCHANGE COMMISSION

Submission for OMB Review; Comment Request

Upon Written Request, Copies Available From: Securities and Exchange Commission, Office of Filings and Information Services, Washington, DC 20549.

Extension: Form F–2 OMB Control No. 3235–0257 SEC File No. 270–250

Form 18–K OMB Control No. 3235–0120 SEC File No. 270–108

Notice is hereby given that pursuant to the Paperwork Reduction Act of 1995 (44 U.S.C. 3501 *et seq.*) the Securities and Exchange Commission (''Commission'') has submitted to the Office of Management and Budget request for extensions of the previously approved collections of information discussed below.

Form F–2 is a registration statement used by foreign issuers to register securities pursuant to the Securities Act of 1933. The information collected is intended to ensure the adequacy of information available to investors in the registration of securities and assures public availability. The information provided is mandatory. Form F–2 is a public document. Form F–2 takes approximately 559 hours per response and is filed by approximately 5 respondents for a total burden of 2,795 hours. It is estimated that 25% of the total burden hours (699 reporting burden hours) is prepared by the company. Also, persons who respond to the collection of information contained in Form F–2 are not required to respond unless the form displays a currently valid control number.

Form 18–K is an annual report form used by foreign governments and political subdivisions with securities listed on a United States exchange. The information to be collected is intended to ensure the adequacy of information available to investors in the registration of securities and assures public availability. The information provided is mandatory. Form 18–K is a public document. Approximately 40 respondents filed Form 18–K at an estimated 8 hours per response for a total annual reporting burden of 320 hours. Also, persons who respond to the collection of information contained in Form 18–K are not required to respond unless the form displays a currently valid control number.

Written comments regarding the above information should be directed to the following persons: (i) Desk Officer for the Securities and Exchange Commission, Office of Information and Regulatory Affairs, Office of Management and Budget, Room 10102, New Executive Office Building, Washington, DC 20503; and (ii) Kenneth A. Fogash, Acting Associate Executive Director/CIO, Office of Information Technology, Securities and Exchange Commission, 450 Fifth Street, NW., Washington, DC 20549. Comments must be submitted to OMB within 30 days of this notice.

Dated: July 25, 2003.

Jill M. Peterson,

Assistant Secretary.

[FR Doc. 03–19493 Filed 7–30–03; 8:45 am]

BILLING CODE 8010–01–P

SECURITIES AND EXCHANGE COMMISSION

[Release No. IC–26110]

Notice of Applications for Deregistration Under Section 8(f) of the Investment Company Act of 1940

July 25, 2003.

The following is a notice of applications for deregistration under section 8(f) of the Investment Company Act of 1940 for the month of July 2003. A copy of each application may be obtained for a fee at the SEC's Public Reference Branch, 450 Fifth St., NW., Washington, DC 20549–0102 (tel. 202–942–8090). An order granting each application will be issued unless the SEC orders a hearing. Interested persons may request a hearing on any application by writing to the SEC's Secretary at the address below and serving the relevant applicant with a copy of the request, personally or by mail. Hearing requests should be received by the SEC by 5:30 p.m. on August 19, 2003, and should be accompanied by proof of service on the applicant, in the form of an affidavit or, for lawyers, a certificate of service. Hearing requests should state the nature of the writer's interest, the reason for the request, and the issues contested. Persons who wish to be notified of a hearing may request notification by writing to the Secretary, SEC, 450 Fifth Street, NW., Washington, DC 20549–0609. For Further Information Contact: Diane L. Titus at (202) 942–0564, SEC, Division of Investment Management, Office of Investment Company Regulation, 450 Fifth Street, NW., Washington, DC 20549–0506.

Nuveen Municipal Money Market Fund, Inc. [File No. 811–3531], Nuveen Taxable Funds, Inc. [File No. 811–3770], Nuveen Money Market Trust [File No. 811–9267]

Summary: Each applicant seeks an order declaring that it has ceased to be an investment company. By August 24, 2001, each applicant had made a liquidating distribution to its shareholders, based on net asset value. Expenses of approximately $10,686 and $42,744 were incurred by Nuveen Municipal Money Market Fund, Inc. and Nuveen Money Market Trust, respectively, in connection with the liquidations and were paid by Nuveen Investments, principal underwriter to each applicant. Nuveen Taxable Funds, Inc. incurred no expenses in connection with its liquidation.

Filing Dates: The applications were filed on April 25, 2003, and amended on July 7, 2003.

Applicants' Address: 333 West Wacker Dr., Chicago, IL 60606.

The Wachovia Funds [File No. 811–6504]

Summary: Applicant seeks an order declaring that it has ceased to be an investment company. On June 7, 2002, and June 14, 2002, fifteen of applicant's eighteen series transferred their assets to corresponding series of Evergreen Equity Trust, Evergreen Select Equity Trust, Evergreen International Trust, Evergreen Select Fixed Income Trust, and Evergreen Select Money Market Trust, based on net asset value. Between June 14, 2002, and June 16, 2002,

applicant's remaining three series made a liquidating distribution to their shareholders, based on net asset value. Expenses of $275,785 incurred in connection with the reorganization and liquidation of applicant were paid by Evergreen Investment Management Company, LLC, applicant's investment adviser.

Filing Dates: The application was filed on November 20, 2002, and amended on July 7, 2003.

Applicant's Address: Federated Investors Tower, 1001 Liberty Ave., Pittsburgh, PA 15222–3779.

The Wachovia Municipal Funds [File No. 811–6201]

Summary: Applicant seeks an order declaring that it has ceased to be an investment company. On June 7, 2002, applicant transferred its assets to corresponding series of Evergreen Municipal Trust, based on net asset value. Expenses of $275,785 incurred in connection with the reorganization and liquidation of applicant were paid by Evergreen Investment Management Company, LLC, applicant's investment adviser.

Filing Dates: The application was filed on November 20, 2002, and amended on July 7, 2003.

Applicant's Address: Federated Investors Tower, 1001 Liberty Ave., Pittsburgh, PA 15222–3779.

Seligman Tax-Aware Fund, Inc. [File No. 811–10297]

Summary: Applicant seeks an order declaring that it has ceased to be an investment company. On April 24, 2003, applicant transferred its assets to Seligman Growth Fund, Inc., based on net asset value. Expenses of $98,500 incurred in connection with the reorganization were paid by J. & W. Seligman & Co. Incorporated, applicant's investment adviser.

Filing Date: The application was filed on July 16, 2003.

Applicant's Address: 100 Park Ave., New York, NY 10017.

The Simms Funds [File No. 811–8871]

Summary: Applicant seeks an order declaring that it has ceased to be an investment company. On February 28, 2003, applicant made a liquidating distribution to its shareholders, based on net asset value. Expenses of $24,956 incurred in connection with the liquidation were paid by Simms Capital Management, Inc., applicant's investment adviser.

Filing Date: The application was filed on July 9, 2003.

Applicant's Address: 55 Railroad Ave., Greenwich, CT 06830.

Integrity Small-Cap Fund of Funds, Inc. [File No. 811–9023]

Summary: Applicant seeks an order declaring that it has ceased to be an investment company. On June 25, 2003, applicant made a liquidating distribution to its shareholders, based on net asset value. Applicant incurred no expenses in connection with the liquidation.

Filing Date: The application was filed on July 21, 2003.

Applicant's Address: 1 Main St. N., Minot, ND 58703.

Market Street Fund [File No. 811–4350]

Summary: Applicant seeks an order declaring that it has ceased to be an investment company. On April 28, 2003, pursuant to an agreement approved by the applicant's shareholders, applicant distributed all of its assets to its shareholders based on net asset value. Expenses of approximately $288,308 were incurred in connection with the merger and were paid by Gartmore Mutual Fund Capital Trust, the investment adviser of the applicant.

Filing Date: The application was filed on May 20, 2003.

Applicant's Address: 1000 Chesterbrook Boulevard, Berwyn, Pennsylvania 19312–1181.

For the Commission, by the Division of Investment Management, pursuant to delegated authority.

J. Lynn Taylor,

Assistant Secretary.

[FR Doc. 03–19472 Filed 7–30–03; 8:45 am]

BILLING CODE 8010–01–P

SECURITIES AND EXCHANGE COMMISSION

Sunshine Act Meeting

Notice is hereby given, pursuant to the provisions of the Government in the Sunshine Act, Pub. L. 94–409, that the Securities and Exchange Commission will hold the following meetings during the week of August 4, 2003:

Closed Meetings will be held on Tuesday, August 5, 2003 at 2 p.m. and Thursday, August 7, 2003 at 11 a.m., and Open Meetings will be held on Wednesday, August 6, 2003 at 10 a.m. and Thursday August 7, 2003 at 10 a.m.

Commissioners, Counsel to the Commissioners, the Secretary to the Commission, and recording secretaries will attend the Closed Meetings. Certain staff members who have an interest in the matters may also be present.

The General Counsel of the Commission, or his designee, has certified that, in his opinion, one or more of the exemptions set forth in 5 U.S.C. 552b(c)(3), (5), (6), (7), (9)(B) and (10) and 17 CFR 200.402(a)(3), (5), (6), (7), (9)(ii) and (10), permit consideration of the scheduled matters at the Closed Meetings.

The subject matter of the Closed Meeting scheduled for Tuesday, August 5, 2003 will be:

Institution and settlement of administrative proceedings of an enforcement nature;

Institution and settlement of injunctive actions;

Formal Orders; and

Adjudicatory matter.

The subject matter of the Open Meeting scheduled for Wednesday, August 6, 2003 will be:

The Commission will consider whether to propose amendments to Item 7 of Schedule 14A under the Exchange Act of 1934. The amendments would require expanded disclosure related to the operation of board nominating committees and new disclosure concerning security holder communications with board members.

For further information, please contact Lillian Cummins, Division of Corporation Finance, at (202) 942–2900.

The subject matter of the Open Meeting scheduled for Thursday, August 7, 2003 will be:

The Commission will hear oral argument on an appeal by Carroll A. Wallace, C.P.A. from the decision of an administrative law judge. During the period covered by this Commission proceeding, Wallace was a partner in the Denver, Colorado office of the accounting firm of KMPG LLC.

Wallace has appealed the law judge's findings that Wallace recklessly engaged in improper professional conduct in violation of the Commission's Rule of Practice 102(e), 17 U.S.C. 201.102(e), with respect to KMPG's audits of The Rockies Fund, an investment company, for the years 1994 and 1995.

Among the issues likely to be argued are:

1. Whether respondent recklessly engaged in improper professional conduct; and
2. If respondent did recklessly engage in improper professional conduct, whether sanctions should be imposed in the public interest.

The subject matter of the Closed Meeting scheduled for Thursday, August 7, 2003 will be: Post-argument discussion.

At times, changes in Commission priorities require alterations in the scheduling of meeting items.

For further information and to ascertain what, if any, matters have been

added, deleted, or postponed, please contact the Office of the Secretary at (202) 942–7070.

Dated: July 29, 2003.

Jonathan G. Katz,

Secretary.

[FR Doc. 03–19614 Filed 7–29–03; 11:41 am]

BILLING CODE 8010–01–P

SECURITIES AND EXCHANGE COMMISSION

[Release No. 34–48223; File No. SR–CBOE–2003–26]

Self-Regulatory Organizations; Notice of Filing and Immediate Effectiveness of Proposed Rule Change and Amendment No. 1 Thereto by the Chicago Board Options Exchange, Incorporated Relating to Its Fiscal Year 2004 Fee Schedule

July 24, 2003.

Pursuant to section 19(b)(1) of the Securities Exchange Act of 1934 (''Act''),[1] and Rule 19b–4 thereunder,[2] notice is hereby given that on July 1, 2003, the Chicago Board Options Exchange, Incorporated (''CBOE'' or ''Exchange'') filed with the Securities and Exchange Commission (''Commission'') the proposed rule change as described in Items I, II, and III below, which Items have been prepared by the CBOE. The CBOE filed the proposal pursuant to section 19(b)(3)(A) of the Act,[3] and Rule 19b–4(f)(2)[4] thereunder, in that the proposed rule change establishes or changes a due fee or other charge, which renders the proposal effective upon filing with the Commission. The CBOE filed via facsimile Amendment No. 1 on July 23, 2003.[5] The Commission is publishing this notice to solicit comments on the proposed rule change, as amended, from interested persons.

I. Self-Regulatory Organization's Statement of the Terms of Substance of the Proposed Rule Change

The Exchange proposes to make certain changes to its Fee Schedule for Fiscal Year 2004. The text of the proposed rule change is available at the Office of the Secretary, CBOE and at the Commission.

[1] 15 U.S.C. 78s(b)(1).

[2] 17 CFR 240.19b–4.

[3] 15 U.S.C. 78s(b)(3)(A).

[4] 17 CFR 240.19b–4(f)(2).

[5] *See* July 23, 2003 letter from Chris Hill, Attorney, CBOE to Nancy Sanow, Assistant Director, Division of Market Regulation, Commission (''Amendment No. 1''). In Amendment No. 1, CBOE removed one of the fee changes and made revisions to the Fee Schedule.

II. Self-Regulatory Organization's Statement of the Purpose of, and Statutory Basis for, the Proposed Rule Change

In its filing with the Commission, the CBOE included statements concerning the purpose of and basis for the proposed rule change and discussed any comments it received on the proposed rule change. The text of these statements may be examined at the places specified in Item IV below. The CBOE has prepared summaries, set forth in Sections A, B, and C below, of the most significant aspects of such statements.

A. Self-Regulatory Organization's Statement of the Purpose of and Statutory Basis for, Proposed Rule Change

1. Purpose

The purpose of this proposed rule change is to make certain fee reductions, additions and changes. The proposed amendments are the product of the Exchange's annual budget review. The fee changes were approved by the Exchange Board of Directors pursuant to CBOE Rule 2.22 and will take effect on July 1, 2003. The Exchange proposes to amend the following fees.

(i) Index Order Book Official Execution Fee Reduction and Simplification

The Exchange proposes to significantly reduce and simplify the Index Customer Order Book Official Execution Fees (''Index OBO fees''). The Exchange represents that these are the rates charged when a floor broker or market maker buys or sells index option contracts out of the order book. Currently, there is a sliding scale of index OBO fee rates that change based on both the size of the order and the amount of the per-contract premium. The new per contract Index OBO fee rate will be flat rates (regardless of order size) of $.60 per book contract for book contracts with a premium greater than or equal to $2 and $.40 per contract for Book contracts with premiums less than $2.

As in prior years, OBO fees will continue to be waived for market orders sent to the book prior to the opening and executed during opening rotation. In the OEX option class, fees will continue to be waived for market and limit orders sent to the book prior to the opening and executed during opening rotation. Cabinet/accommodation/liquidation trades will continue to be charged $.10 per contract.

The Exchange estimates that the overall effect of the changes will be a reduction of approximately 33% in Index OBO fees.

(ii) Customer Large Trade Discounts

The Exchange proposes to establish a pilot program providing a customer large trade discount in the form of a cap on customer transaction fees, to be in effect for the period July through December 2003 for most CBOE index option products.[6] The Exchange determined the contract size at which the cap would be implemented after reviewing recent trading activity in each of the index products. Trade match and floor brokerage fees are not subject to the cap on fees.

Regular customer transaction fees will only be charged up to the following quantity of contracts per order, for the following underlying indexes:

1. Dow Jones indexes (including DIA)—charge only the first 7,500 contracts;
2. SPX—charge only the first 5,000 contracts;
3. OEX (including XEO and OEF), NDX and other indexes (not including MNX)—charge only the first 3,000 contracts.

(iii) Non-OCC Firm Booth Fees and Booth Rental Incentive Plan

The Exchange proposes to reduce monthly rental rates for most of the booths[7] that the Exchange leases to member organizations that are not members of the OCC (''non-OCC firms'') by $250, to a new rate of $300 per month. OCC member firms will continue to be assessed at $165 per month.

In an effort to increase booth space rentals, the Exchange will also establish a booth rental incentive plan that will be in effect for the period July 2003 through June 2004. Pursuant to this plan, all Members and Member Firms, both OCC and non-OCC, will be permitted to lease additional perimeter and Green Room booth space at a reduced rate of $100 per month per additional booth. The discounted price is only applicable to booths leased in excess of the quantity that the Member or Firm had been leasing as of June 1, 2003. For new Members and Member Firms, the first four booths will be assessed at the normal rate effective as of July 1, 2003, and any additional

[6] The MNX option class will not be included in this program since MNX customer fees were significantly reduced in June 2002 to a flat rate of $.15 per contract. *See* Securities Exchange Act Release No. 46045 (June 6, 2002), 67 FR 41284 (June 17, 2002) (noticing SR–CBOE–2002–28).

[7] Specifically, the reduced rates will apply to booths around the perimeter of the main 4th floor trading floor (''perimeter booths'') and those in the ''Green Room'' (the second floor trading area.) Booth rates will not change for those booths designated as OEX, OEX book, or Dow Jones/MNX booths.

booths in excess of the initial four will be assessed at the reduced lease rate during the incentive period. All booth fees discounted under the incentive plan will revert to regular rates on July 1, 2004.

(iv) Continuation of Market Share Incentive Program (MIP)

The MIP pilot program was initiated March 1, 2003.[8] The Exchange proposes to extend the program for an additional six-month period from July through December 2003. As set forth in the initial filing, the program will continue to reduce transaction fees for Market Makers and DPMs in the top 300 equities and QQQs if certain monthly market share targets or increases in market share in these option classes are achieved.

(v) Discontinuation of Prospective Fee Reduction Program

The Exchange proposes to discontinue the Prospective Fee Reduction Program (''PFRP'') for index option classes. The MIP Program previously replaced the PFRP for the equities and QQQ options classes, and the Exchange will similarly end the PFRP for index option classes in order to help fund various service enhancements for the index option classes.

(vi) Dow Jones Products Market Maker Transaction Fees

The Exchange proposes to increase market-maker transaction fees in Dow Jones option classes by $.10 per contract, to $.29 per contract, to partially recover the Exchange's costs to license Dow Jones products. This is consistent with similar fee surcharges that the Exchange has previously implemented to recover licensing costs for the MNX [9] and RUT [10] option classes.

(vii) RAES Access Fees for Non-Customer Orders

In March 2003, the Exchange implemented a pilot program temporarily suspending the $.30 per contract access fee for non-customer RAES orders in equity option classes through June 30, 2003.[11] The Exchange proposes to discontinue the pilot program, and reinstate the fee for equity option classes. The fee will also continue unchanged for non-equity option classes.

(viii) Data Lines Installation, Relocation and Removal

The Exchange has not changed its fees for these services since Fiscal Year 1993. The Exchange proposes to increase fees in this area to fully recover labor costs associated with this service. The new fees will be as follows:

1. Installation for (i) Lines from local carrier to trading floor and (ii) lines between Communications Center and trading floor will increase from $263 to $350;
2. Installation between local carrier and Communications Center will increase from $158 to $200;
3. Relocation on the trading floor will increase from $315 to $425;
4. Removal of (i) Lines from local carrier to trading floor and (ii) lines between Communications Center and trading floor will increase from $158 to $200;
5. Removal of lines between local carrier and Communications Center—will increase from $79 to $100.

(ix) Russell 2000 DPM Supplemental Transaction Fee

Due to the fact that the DPM in the Russell 2000 has been paying a significant periodic fee to CBOE to recover the Exchange's additional costs to license the product,[12] the Exchange has determined that it no longer needs to also impose the $.16 per contract fee charged to the DPM for each Russell 2000 DPM contract.[13] The Exchange therefore proposes to eliminate the $.16 per contract fee.

(x) Floor Broker Workstation (FBW)

The Exchange proposes to charge a monthly fee of $425 to place a new FBW functionality on desktop terminals, equal to the rate currently assessed for ILX devices. If the application resides on a workstation that has the ILX, TNT (both proprietary terminal functionalities) and FBW functionalities, an additional $100 fee will be assessed. Mobile FBWs will not be assessed a fee at this time in order to encourage their greater usage.

(xi) Pass Through of Additional NASD Fingerprinting Fee

On August 2, 2002, the Exchange entered into a Memorandum of Understanding with the NASD, whereby the registration of associated persons of CBOE member organizations would be processed through Web CRD.[14] This process includes the fingerprinting of associated persons. The NASD has informed the Exchange that beginning on July 14, 2003, it intends to assess a new fee of $13 for the processing of fingerprint results submitted by members or member firms on behalf of their associated persons who have had their prints processed through a self-regulatory organization other than the NASD. The NASD will be applying this fee equally to all self-regulatory organizations, and will retain the fee proceeds.

The Exchange proposes to pass these costs through to the appropriate member firms. Specifically, CBOE member firms would be charged an additional $13 for each associated person that is fingerprinted directly through a self regulatory organization other than NASD (for instance, CBOE). CBOE notes that the NASD intends to raise its fee from $10 to $13 for CBOE members that are fingerprinted directly by the NASD.

2. Statutory Basis

The proposed rule change is consistent with section 6(b)[15] of the Act, in general, and furthers the objectives of section 6(b)(4)[16] of the Act in particular, in that it is designed to provide for the equitable allocation of reasonable dues, fees, and other charges among CBOE members.

B. Self-Regulatory Organization's Statement on Burden on Competition

The Exchange does not believe that the proposed rule change will impose any burden on competition not necessary or appropriate in furtherance of purposes of the Act.

C. Self-Regulatory Organization's Statement on Comments on the Proposed Rule Change Received From Members, Participants, or Others

No written comments were solicited or received with respect to the proposed rule change.

[8] *See* Securities Exchange Act Release No. 47508 (March 14, 2003), 68 FR 13972 (March 21, 2003) (noticing SR–CBOE–2003–06).

[9] *See* Securities Exchange Act Release No. 43226 (August 29, 2000), 65 FR 54332 (September 7, 2000) (noticing SR–CBOE–2000–33).

[10] *See* Securities Exchange Act Release Nos. 47169 (January 13, 2003), 68 FR 2596 (January 17, 2003) (noticing SR–CBOE–2002–73) and 47170 (January 13, 2003), 68 FR 2595 (January 17, 2003) (noticing SR–CBOE–2002–72).

[11] *See* Securities Exchange Act Release No. 47559 (March 21, 2003), 68 FR 15252 (March 28, 2003) (noticing SR–CBOE–2003–10).

[12] *See* Securities Exchange Act Release No. 47169 (January 13, 2003), 68 FR 2596 (January 17, 2003) (noticing SR–CBOE–2002–73).

[13] *See* Securities Exchange Act Release No. 47170 (January 13, 2003), 68 FR 2595 (January 17, 2003) (noticing SR–CBOE–2002–72).

[14] *See* Securities Exchange Act Release No. 46062 (June 11, 2002), 67 FR 41552 (June 18, 2002) (noticing SR–CBOE–2001–66).

[15] 15 U.S.C. 78f(b).

[16] 15 U.S.C. 78f(b)(4).

III. Date of Effectiveness of the Proposed Rule Change and Timing for Commission Action

Because the foregoing rule change establishes or changes a due, fee, or other charge imposed by the Exchange, it has become effective pursuant to section 19(b)(3)(A) of the Act[17] and subparagraph (f)(2) of Rule 19b–4 thereunder.[18] At any time within 60 days of the filing of the proposed rule change, the Commission may summarily abrogate such rule change if it appears to the Commission that such action is necessary or appropriate in the public interest, for the protection of investors, or otherwise in furtherance of the purposes of the Act.[19]

IV. Solicitation of Comments

Interested persons are invited to submit written data, views, and arguments concerning the foregoing, including whether the proposed rule change is consistent with the Act. Persons making written submissions should file six copies thereof with the Secretary, Securities and Exchange Commission, 450 Fifth Street, NW., Washington, DC 20549–0609. Copies of the submission, all subsequent amendments, all written statements with respect to the proposed rule change that are filed with the Commission, and all written communications relating to the proposed rule change between the Commission and any person, other than those that may be withheld from the public in accordance with the provisions of 5 U.S.C. 552, will be available for inspection and copying in the Commission's Public Reference Section. Copies of such filing will also be available for inspection and copying at the principal office of the CBOE. All submissions should refer to the file number SR–CBOE–2003–26 and should be submitted by August 21, 2003.

For the Commission, by the Division of Market Regulation, pursuant to delegated authority.[20]

J. Lynn Taylor,

Assistant Secretary.

[FR Doc. 03–19473 Filed 7–30–03; 8:45 am]

BILLING CODE 8010–01–P

[17] 15 U.S.C. 78s(b)(3)(A).

[18] 17 CFR 240.19b–4(f)(2).

[19] For purposes of calculating the 60-day abrogation period, the Commission considers the period to have commenced on July 23, 2003, the date the CBOE filed Amendment No. 1.

[20] 17 CFR 200.30–3(a)(12).

SECURITIES AND EXCHANGE COMMISSION

[Release No. 34–48227; File No. SR–NASD–2003–74]

Self-Regulatory Organizations; Notice of Filing of a Proposed Rule Change and Amendment Nos. 1 and 2 Thereto by the National Association of Securities Dealers, Inc. Regarding the Regulation of Activities of Members Experiencing Financial and/or Operational Difficulties

July 25, 2003.

Pursuant to Section 19(b)(1) of the Securities Exchange Act of 1934 (''Act'')[1] and Rule 19b–4 thereunder,[2] notice is hereby given that on April 16, 2003, the National Association of Securities Dealers, Inc. (''NASD'') filed with the Securities and Exchange Commission (''SEC'' or ''Commission'') the proposed rule change as described in Items I, II, and III below, which Items have been prepared by NASD. On June 17, 2003, NASD submitted Amendment No. 1 to the proposed rule change.[3] On July 9, 2003, NASD submitted Amendment No. 2 to the proposed rule change.[4] The Commission is publishing this notice to solicit comments on the proposed rule change, as amended, from interested persons.

I. Self-Regulatory Organization's Statement of the Terms of Substance of the Proposed Rule Change

NASD is proposing to amend NASD Rules 3130, 3131 and the Rule 9410 Series to expand NASD's authority to take expedited action against all member firms with capital deficiencies and to permit NASD to suspend a member that operates for any period of time with inadequate net capital. In addition, NASD proposes to delete subparagraph (g) of NASD Rule 9160 because the Department of Member Regulation staff does not participate as an adjudicator in a Rule 9410 decision.

The text of the proposed rule change is set forth below. Proposed new language is in *italics;* proposed deletions are in [brackets].[5]

* * * * *

3130. Regulation of Activities of Members Experiencing Financial and/or Operational Difficulties

(a) Application—For the purposes of this Rule, the term ''member'' shall be limited to any *NASD* member [of the Association who] *that* is not designated to another self-regulatory organization by the Commission for financial responsibility pursuant to Section 17 of the Act and SEC Rule 17d-1 thereunder. Further, the term shall not be applicable to any member [who] *that* is [subject to paragraphs (a)(2)(iv), (a)(2)(v) or (a)(2)(vi) of SEC Rule 15c3–1, or is otherwise exempt from the provisions of said rule or is] subject to Rule 3131.

(b) Each member subject to SEC Rule 15c3–1 shall comply with the net capital requirements prescribed therein and with the provisions of this Rule.

[(b)]*(c)* A member, when so directed by [the Association] *NASD,* shall not expand its business during any period in which:

(1) Any of the following conditions continue to exist, or have existed, for more than 15 consecutive business days:

[1] 15 U.S.C. 78s(b)(1).

[2] 17 CFR 240.19b-4.

[3] *See* letter from Shirley H. Weiss, Associate General Counsel, Office of General Counsel, Regulatory Policy and Oversight, NASD, to Katherine A. England, Assistant Director, Division of Market Regulation (''Division''), Commission, dated June 17, 2003 (''Amendment No. 1''). In Amendment No. 1, NASD proposed the following changes: (i) to revise NASD Rules 3130(e) and 3131(e) to state that the Department of Member Regulation may issue a notice to members that are not in compliance with applicable net capital requirements set forth in SEC Rule 15c3–1 or Section 402.2 of the rules of the Treasury Department, as applicable, directing such member to suspend all business operations, but that the obligation to suspend all business operations arises from the SEC Rule 15c3–1 or Section 402.2 of the rules of the Treasury Department, as applicable, and not from the notice issued by the Department of Member Regulation; (ii) to add new Rules 3130(f) and 3131(f) to provide that any notice directing a member to limit or suspend its business operations will be issued by the Department of Member Regulation pursuant to Rule 9412; and (iii) to make certain non-substantive technical changes to correct the rule language and the markings indicating changes thereto.

[4] *See* letter from Shirley H. Weiss, Associate General Counsel, Office of General Counsel, Regulatory Policy and Oversight, NASD, to Katherine A. England, Assistant Director, Division, Commission, dated July 8, 2003 (''Amendment No. 2''). In Amendment No. 2, NASD proposed the following changes: (i) to revise NASD Rule 9412 to delete a reference to the Department of Member Regulation; (ii) to change a reference in NASD Rule 9415(d); and (iii) to delete subparagraph (g) of NASD Rule 9160. The Commission notes that Amendment No. 2 contains a typographical error with regards to the reference to NASD Rule 9515(k)(2) in the letter. The reference should be to NASD Rule 9413(k)(2), as set forth in the proposed rule text. The Commission notes further that in Amendment No. 2, NASD incorrectly states that it is amending NASD Rule 9412. Amendment No. 2 makes no additional changes to NASD Rule 9412. Telephone conversation between Shirley H. Weiss, Associate General Counsel, Office of General Counsel, Regulatory Policy and Oversight, NASD, and Ann E. Leddy, Attorney, Division, Commission (July 21, 2003).

[5] The Commission has included proposed rule language set forth in the original filing that NASD inadvertently omitted from Amendment No. 2. Telephone conversation between Shirley H. Weiss, Associate General Counsel, Office of General Counsel, Regulatory Policy and Oversight, NASD, and Ann E. Leddy, Attorney, Division, Commission (July 17, 2003).

(A) A firm's net capital is less than 150 percent of its net capital minimum requirement or such greater percentage thereof as may from time to time be prescribed by [the Association] *NASD;*

(B) If subject to the aggregate indebtedness requirement under SEC Rule 15c3–1, a firm's aggregate indebtedness is more than 1,000 per centum of its net capital;

(C) If, in lieu of paragraph [(b)]*(c)*(1)(B) above, the specified percentage of the aggregate debit items in the Formula for Determination of Reserve Requirements for Brokers and Dealers under SEC Rule 15c3–3 (the alternative net capital requirement) is applicable, a firm's net capital is less than 5 percent of the aggregate debit items thereunder; or

(D) The deduction of capital withdrawals including maturities of subordinated debt scheduled during the next six months would result in any one of the conditions described in subparagraph (A), (B) or (C).

(2) [The Association] *NASD* restricts the member for any other financial or operational reason.

[(c)]*(d)* A member, when so directed by [the Association] *NASD,* shall forthwith reduce its business:

(1) to a point [enabling its available capital to comply with the standards] *at which the member would not be subject to a prohibition against expansion of its business as* set forth in paragraph [(b)]*(c)*(1)(A), (B) or (C) of this Rule if any of the following conditions continue to exist, or have existed, for more than [fifteen (15)] *15* consecutive business days:

(A) A firm's net capital is less than 125 percent of its net capital minimum requirement or such greater percentage thereof as may from time to time be prescribed by [the Association] *NASD;*

(B) No Change.

(C) If, in lieu of paragraph [(c)]*(d)*(1)(B) above, the specified percentage of the aggregate debit items in the Formula for Determination of Reserve Requirements for Brokers and Dealers, under SEC Rule 15c3–3 (the alternative net capital requirement) is applicable, a firm's net capital is less than 4 percent of the aggregate debit items thereunder; or

(D) If the deduction of capital withdrawals including maturities of subordinated debt scheduled during the next six months would result in any one of the conditions described in paragraph [(c)](*d*)(1)(A), (B) or (C) of this Rule.

(2) As required by [the Association] *NASD* when it restricts a member for any other financial or operational reason.

(e) A member shall suspend all business operations during any period of time when the member is not in compliance with applicable net capital requirements as set forth in SEC Rule 15c3–1. The Department of Member Regulation may issue a notice to such member directing it to suspend all business operations; however, the member's obligation to suspend all business operations arises from its obligations under SEC Rule 15c3–1 and is not dependent on any notice that may be issued by the Department of Member Regulation.

(f) Any notice directing a member to limit or suspend its business operations shall be issued by the Department of Member Regulation pursuant to Rule 9412.

* * * * *

3131. Regulation of Activities of Section 15C Members Experiencing Financial and/or Operational Difficulties

(a) Application—For the purposes of this Rule, the term ''member'' shall be limited to any member of [the Association] *NASD* registered with the Commission pursuant to Section 15C of the Act that is not designated to another self-regulatory organization by the Commission for financial responsibility pursuant to Section 17 of the Act and Rule 17d–1 thereunder. [Further, the term shall not be applicable to any member that is subject to Section 402.2(c) of the rules of the Treasury Department, or is otherwise exempt from the provisions of said rule].

(b) Each member subject to Section 402.2 of the rules of the Treasury Department shall comply with the capital requirements prescribed therein and with the provisions of this Rule.

[(b)](*c*) A member, when so directed by [the Association] *NASD*, shall not expand its business during any period in which:

(1) Any of the following conditions continue to exist, or have existed, for more than [fifteen (15)] *15* consecutive business days:

(A) A firm's liquid capital is less than 150 percent of the total haircuts or such greater percentage thereof as may from time to time be prescribed by [the Association] *NASD.*

(B) through (C) No Change.

(2) [The Association] *NASD* restricts the member for any other financial or operational reason.

[(c)] (*d*) A member, when so directed by [the Association] *NASD*, shall forthwith reduce its business:

(1) To a point [enabling its available capital to comply with the standards] *at which the member would not be subject to a prohibition against expansion of its business as* set forth in subparagraphs [(b)](*c*)(1)(A), (B), or (C) of this Rule if any of the following conditions continue to exist, or have existed, for more than [fifteen (15)] *15* consecutive business days:

(A) A firm's liquid capital is less than 125 percent of total haircuts or such greater percentage thereof as may from time to time be prescribed by [the Association] *NASD.*

(B) through (C) No Change.

(2) As required by [the Association] *NASD* when it restricts a member for any other financial or operational reason.

(e) A member shall suspend all business operations during any period of time when the member is not in compliance with applicable net capital requirements as set forth in Section 402.2 of the rules of the Treasury Department. The Department of Member Regulation may issue a notice to such member directing it to suspend all business operations; however, the member's obligation to suspend all business operations arises from its obligations under Section 402.2 of the rules of the Treasury Department and is not dependent on any notice that may be issued by the Department of Member Regulation.

(f) Any notice directing a member to limit or suspend its business operations shall be issued by the Department of Member Regulation pursuant to Rule 9412.

* * * * *

9160. Recusal or Disqualification

No person shall participate as an Adjudicator in a matter governed by the Code as to which he or she has a conflict of interest or bias, or circumstances otherwise exist where his or her fairness might reasonably be questioned. In any such case the person shall recuse himself or herself, or shall be disqualified as follows:

(a) through (f) No change.

[(g) NASD Regulation Staff as Adjudicator]

[The President of NASD Regulation shall have authority to order the disqualification of a member of the staff of the Department of Member Regulation participating in a Rule 9410 Series decision.]

* * * * *

9400. [LIMITATION] PROCEDURES *FOR ACTIONS TAKEN* UNDER RULES 3130 AND 3131

* * * * *

Rule 9412. Notice [of Limitations]

The Department of Member Regulation may issue a notice directing

a member to [limit] *restrict* its business activities, *either by limiting or ceasing to conduct those activities*, if the Department of Member Regulation has reason to believe that [any] *a* condition specified in *Rule* 3130 or Rule 3131 exists. The notice shall specify the grounds on which such [action is being taken] *restrictions are being imposed*, the nature of the [limitations] *restrictions* to be imposed, the effective date of the *restrictions* [limitations], a fitting sanction that will be imposed if the member fails to comply with any [the] *restrictions* [limitations] set forth in the notice, and the conditions for terminating such [limitations] *restrictions*. The effective date of the [limitations] *restrictions* shall be at least seven days after the date of service of the notice. The notice also shall inform the member that it may request a hearing before the [Department of Member Regulation] *Office of Hearing Officers* under Rule 9413. The Department of Member Regulation shall serve the notice by facsimile or overnight courier.

9413. Hearing Panel Review

(a) Request for a Hearing

A member subject to a notice issued under Rule 9412 may file a written request for hearing before a Hearing Panel with the Office of Hearing Officers. The request shall state the specific grounds for withdrawing or modifying *any of* the [limitations] *restrictions* specified in the notice. The request shall be filed pursuant to Rules 9135, 9136, and 9137 within five days after service of the notice under Rule 9412. The member may withdraw its request at any time by filing a written notice with the Office of Hearing Officers pursuant to Rules 9135, 9136, and 9137. The time limits set forth herein are to be strictly construed and cannot be modified except for good cause shown.

(b) No Change

(c) Stay

Unless otherwise ordered by the NASD Board Executive Committee, the [initiation of a review under this paragraph shall stay the decision of the Department of Member Regulation or an uncontested notice until a decision constituting final action of the Association is issued] *request for a hearing shall stay the effective date of the notice*.

(d) through (h) No Change

(i) Evidence Not Admitted

Evidence that is proffered but not admitted during the hearing shall not be part of the record, but shall be retained by the custodian of the record until the date when [the Association's] *NASD's* decision becomes final or, if applicable, upon the conclusion of any review by the Commission or the federal courts.

(j) Failure to Request Hearing

If a member does not request a hearing under paragraph (a), the [limitations] *restrictions* specified in the notice shall become effective on the date specified in the notice. Unless the Executive Committee calls the notice for review under Rule 9415, the [limitations] *restrictions* specified in the notice shall remain in effect until the Department of Member Regulation reduces or removes the [limitations] *restrictions* pursuant to Rule 9417(b).

(k) Decision

(1) Within seven days after the hearing, the Hearing Panel shall issue a written decision approving, modifying, or withdrawing the [limitations] *restrictions* specified in the notice. If the decision imposes [limitations] *restrictions*, the decision shall state the grounds for the [limitations] *restrictions*, the conditions for terminating such [limitations] *restrictions*, and provide for a fitting sanction to be imposed under Rule 9416 if the member fails to comply with the [limitations] *restrictions*. The Office of Hearing Officers shall promptly serve the decision by facsimile or overnight courier pursuant to Rules 9132 and 9134. The [limitations] *restrictions* imposed shall become effective upon service of the decision.

(2) Contents of Decision

The decision shall include:

(A) a description of the Department of Member Regulation's [decision] *notice,* including its rationale;

(B) a description of the principal issues regarding the imposition of [limitations] *restrictions* raised in the review and a statement supporting the disposition of such issues;

(C) No Change

(D) a statement of whether the Department of Member Regulation's [decision] *notice* is affirmed, modified, or reversed, and a rationale therefor; and

(E) if any *restrictions* [limitations] are imposed:

(i) a description of the [limitations] *restrictions* and a statement describing a fitting sanction that will be imposed under Rule 9416 if the member fails to comply with any of the [limitations] *restrictions;* and

(ii) the conditions for terminating the [limitations] *restrictions*.

(l) Issuance of Decision After Expiration of Call for Review Period

The Hearing Panel shall provide its proposed written decision to the NASD Board Executive Committee. The NASD Board Executive Committee may call the proceeding for review pursuant to Rule 9415. If the NASD Board Executive Committee does not call the proceeding for review, the proposed written decision of the Hearing Panel shall constitute the final action of [the Association] *NASD*.

(m) Ex Parte Communications

The prohibitions against ex parte communications in Rule 9143 shall become effective under the Rule 9410 Series when [Association] *NASD* staff has knowledge the NASD Board Executive Committee intends to review a decision on its own motion under this Rule.

9414. No change

9415. Discretionary Review by the NASD Board Executive Committee

(a) through (c) No Change

(d) Decision of NASD Board Executive Committee, Including Remand

After review, the NASD Board Executive Committee may affirm, modify, or reverse the proposed written decision of the Hearing Panel. Alternatively, the NASD Board Executive Committee may remand the proceeding with instructions. The NASD Board Executive Committee shall prepare a written decision that includes all of the elements described in Rule [9414(k)(2)] *9413(k)(2)*.

(e) Issuance of Decision

The NASD Board Executive Committee shall issue and serve its written decision on the member and the Department of Member Regulation pursuant to Rules 9132 and 9134. The decision shall be effective upon service. The decision shall constitute the final action of [the Association] *NASD,* unless the NASD Board Executive Committee remands the proceeding.

9416. Enforcement of Sanctions

(a) Order

If the Department of Member Regulation determines that a member has failed to comply with any [limitations] *restrictions* imposed by a decision or an effective notice under the Rule 9410 Series that has not been stayed, the Department of Member Regulation shall issue an order imposing the sanctions set forth in the decision or notice and specifying the effective date and time of such

sanctions. The Department of Member Regulation shall serve the order on the member by facsimile or overnight courier.

(b) through (c) No Change

(d) Decision

Within four days after the hearing, the Hearing Panel shall affirm, modify, or reverse the order issued under paragraph (a). The Office of Hearing Officers shall serve the decision on the member pursuant to Rules 9132 and 9134. The decision shall become effective upon service and shall constitute final action of [the Association] *NASD*.

9417. Additional [Limitations] *Restrictions*; Reduction or Removal of [Limitations] *Restrictions*

(a) Additional [Limitations] *Restrictions*

If a member continues to experience financial or operational difficulty specified in Rule 3130 or 3131, notwithstanding an effective notice or decision under the Rule 9410 Series, the Department of Member Regulation may impose additional [limitations] *restrictions* by issuing a notice under Rule 9412. The notice shall state that the member may apply for relief from the additional [limitations] *restrictions* by filing a written application for a hearing under Rule 9413 and that the procedures in Rules 9413 through 9416 shall be applicable. An application for a hearing also shall include a detailed statement of the member's objections to the additional [limitations] *restrictions*.

(b) Reduction or Removal of [Limitations] *Restrictions*

If the Department of Member Regulation determines that any [limitations] *restrictions* previously imposed under the Rule 9410 Series should be reduced or removed, the Department of Member Regulation shall serve a written notice on the member pursuant to Rules 9132 and 9134.

9418. Application to Commission for Review

The right to have any action taken by [the Association] *NASD* pursuant to this Rule Series reviewed by the Commission is governed by Section 19 of the Act. The filing of an application for review shall not stay the effectiveness of the action taken by [the Association] *NASD*, unless the Commission otherwise orders.

9419. Other Action Not Foreclosed

Action by [the Association] *NASD* under the Rule 9410 Series shall not foreclose action by [the Association] *NASD* under any other Rule.

* * * * *

II. Self-Regulatory Organization's Statement of the Purpose of, and Statutory Basis for, the Proposed Rule Change

In its filing with the Commission, NASD included statements concerning the purpose of, and basis for, the proposed rule change and discussed any comments it received on the proposed rule change. The text of these statements may be examined at the places specified in Item IV below. NASD has prepared summaries, set forth in Sections A, B, and C below, of the most significant aspects of such statements.

A. Self-Regulatory Organization's Statement of the Purpose of, and Statutory Basis for, the Proposed Rule Change

1. Purpose

Background

Currently, NASD can take expedited action against a member when its Department of Member Regulation has reason to believe that the member maintains inadequate capital levels given the scope and nature of the firm's business. However, NASD is currently limited to taking action with respect to only those firms that must maintain a minimum net capital of greater than $50,000 and can only issue notices (and institute an expedited proceeding when these notices are contested) requiring that such firms either limit their business or not expand their business in order to maintain appropriate net capital levels. Further, NASD's current rules do not address the capacity of NASD to suspend a firm from business on an expedited basis when it fails to maintain minimum net capital.[6]

NASD believes that enhanced tools are required to enable it to better address any situation where a member is not satisfying applicable capital requirements. Accordingly, NASD proposes amendments to Rules 3130, 3131 and the Rule 9410 Series as described below. These amendments would (i) expand NASD's authority to take expedited action against all member firms with capital deficiencies, (ii) permit NASD to suspend a member that operates for any period of time with inadequate net capital, and (iii) make non-substantive clarifications to the language of the rules. In addition, NASD proposes to delete subparagraph (g) of NASD Rule 9160 because the Department of Member Regulation staff does not participate as an adjudicator in a Rule 9410 decision.

Current NASD Rules Regarding Members Experiencing Financial Difficulties

NASD Rules 3130 and 3131 regulate the activities of members that are (1) required to maintain net capital in excess of $50,000; and (2) experiencing certain financial and/or operational deficiencies.[7] These rules provide that NASD may prescribe certain remedial courses of action for members experiencing financial or operational deficiencies, such as requiring them to limit their activities. NASD's Rule 9410 Series provides a procedural framework for actions taken under these provisions. Pursuant to the Rule 9410 Series, a member experiencing financial and operational difficulties as described in Rules 3130 and 3131 receives a notice of limitations describing the grounds for the notice, the effective date of the limitations described in the notice, and a fitting sanction that will be imposed if the member fails to comply with the limitations set forth in the notice. The member then has five days from the date of service of the notice to request a hearing. If a hearing is not requested, the limitations prescribed in the notice become effective at least seven days after the date of service of the notice. Following the hearing, if one is requested, any remedial action ordered by the Hearing Panel becomes effective. If a member does not comply with the limitations described in any effective notice or remedial action imposed by the Hearing Panel, NASD staff may order the sanction set forth in the notice or specified in the Hearing Panel decision against the member. The member has the opportunity to request a second hearing if such sanctions are ordered.

[6] NASD Rule 9512 (''Summary Proceedings'') is available to address severe financial or operational difficulties. However, because this procedure allows NASD to suspend a member before a hearing is held, and requires authorization from the Board of Governors, NASD represents that it is reserved for the most serious of circumstances and generally would be inappropriate to address most instances of net capital deficiencies.

[7] Rule 15c3–1 under the Act requires that firms maintain certain specified levels of net capital. 17 CFR 240.15c3–1. Section 402.2 of the Treasury Department rules contains liquid capital requirements for government securities broker/dealers. 17 CFR 402.2. NASD represents that it does not set net capital requirements, but enforces these provisions as part of its regulatory function. However, NASD Rules 3130 and 3131 effectively allow NASD to require net capital and liquid capital requirements in excess of those respective capital requirements stated above.

Application of Rules to All Member Firms

NASD Rules 3130 and 3131 generally provide that NASD may direct a member not to expand its business or to reduce its business if certain conditions are present for a period of 15 consecutive business days or more. NASD Rule 3130 exempts member firms with net capital requirements of $50,000 or less; NASD Rule 3131 exempts government securities member firms with liquid capital requirements of $50,000 or less.

NASD believes that these provisions should apply to all member firms regardless of their minimum capital requirements. NASD believes that, because capital compliance is fundamental to operating a broker-dealer, every firm that operates with inadequate capital poses a risk to other members and the investing public, and NASD believes that it should be able to take prompt action against any member that operates with inadequate capital. Accordingly, NASD proposes amendments to expand the scope of Rules 3130 and 3131 to include members with capital requirements of $50,000 or less.

Suspension of Members for Net Capital Violations

As described above, NASD Rules 3130 and 3131 allow NASD to require a member to take certain remedial actions if it is experiencing certain financial and/or operational deficiencies. The remedial actions could impose limitations on a member's business operations such that the member complies with net capital requirements applicable to the member's reduced business operations. However, in certain instances, NASD notes that a member may be operating with capital that is so inadequate that no limitation on its business activities could be imposed that would bring the firm into capital compliance. Alternatively, a member firm that is not in compliance with capital requirements may have such minimal operations that NASD could impose no meaningful limitation on the member's operations. As a result, NASD is proposing to expand the remedies available to it to address capital violations. Specifically, NASD proposes amendments that would require a member to suspend its business operations for any period of time during which it is not in compliance with applicable net capital requirements.

2. Statutory Basis

NASD believes that the proposed rule change is consistent with the provisions of Section 15A(b)(6) of the Act,[8] which requires, among other things, that NASD rules be designed to prevent fraudulent and manipulative acts and practices, to promote just and equitable principles of trade, and, in general, to protect investors and the public interest. Specifically, NASD believes that the proposed rule change is intended to ensure that investors, the securities industry and the general public are not put at risk by members operating securities businesses without appropriate levels of capital.

B. Self-Regulatory Organization's Statement on Burden on Competition

NASD does not believe that the proposed rule change will result in any burden on competition that is not necessary or appropriate in furtherance of the purposes of the Act.

C. Self-Regulatory Organization's Statement on Comments on the Proposed Rule Change Received from Members, Participants, or Others

Written comments were neither solicited nor received.

III. Date of Effectiveness of the Proposed Rule Change and Timing for Commission Action

Within 35 days of the date of publication of this notice in the **Federal Register** or within such longer period (i) as the Commission may designate up to 90 days of such date if it finds such longer period to be appropriate and publishes its reasons for so finding or (ii) as to which the self-regulatory organization consents, the Commission will:

A. by order approve such proposed rule change, or

B. institute proceedings to determine whether the proposed rule change should be disapproved.

IV. Solicitation of Comments

Interested persons are invited to submit written data, views, and arguments concerning the foregoing, including whether the proposed rule change, as amended, is consistent with the Act. Persons making written submissions should file six copies thereof with the Secretary, Securities and Exchange Commission, 450 Fifth Street, NW., Washington, DC 20549–0609. Copies of the submission, all subsequent amendments, all written statements with respect to the proposed rule change that are filed with the Commission, and all written communications relating to the proposed rule change between the Commission and any person, other than those that may be withheld from the public in accordance with the provisions of 5 U.S.C. 552, will be available for inspection and copying in the Commission's Public Reference Room. Copies of such filing will also be available for inspection and copying at the principal office of NASD. All submissions should refer to File No. SR-NASD–2003–74 and should be submitted by August 21, 2003.

For the Commission, by the Division of Market Regulation, pursuant to delegated authority.[9]

Jill M. Peterson,

Assistant Secretary.

[FR Doc. 03–19494 Filed 7–30–03; 8:45 am]

BILLING CODE 8010–01–P

[8] 15 U.S.C. 78*o*-3(b)(6).

[9] 17 CFR 200.30–3(a)(12).

SMALL BUSINESS ADMINISTRATION

Data Collection Available for Public Comments and Recommendations

ACTION: Notice and request for comments.

SUMMARY: In accordance with the Paperwork Reduction Act of 1995, this notice announces the Small Business Administration's intentions to request approval on a new and/or currently approved information collection.

DATES: Submit comments on or before September 29, 2003.

ADDRESSES: Send all comments regarding whether these information collections are necessary for the proper performance of the function of the agency, whether the burden estimates are accurate, and if there are ways to minimize the estimated burden and enhance the quality of the collections, to Sandra Johnston, Program Analyst, Office of Financial Assistance, Small Business Administration, 409 3rd Street SW., Suite 8300, Washington, DC 20416

FOR FURTHER INFORMATION CONTACT: Sandra Johnston, Program Analyst, 202–205–7528 or Curtis B. Rich, Management Analyst, 202–205–7030.

SUPPLEMENTARY INFORMATION:

Title: ''Statement of Personal History''.

Form No: 1081.

Description of Respondents: Certified Development Companies.

Annual Responses: 300.

Annual Burden: 75.

Title: ''Reports to SBA; Provisions of 13 CFR 120 472''.

Form No: N/A.

Description of Respondents: Small Business Lending Companies.

Annual Responses: 14.
Annual Burden: 1,120.

Jacqueline White,

Chief, Administrative Information Branch.

[FR Doc. 03–19464 Filed 7–30–03; 8:45 am]

BILLING CODE 8025–01–P

SMALL BUSINESS ADMINISTRATION

[Declaration of Disaster #P011]

State of Nebraska

As a result of the President's major disaster declaration for Public Assistance on July 21, 2003, the U.S. Small Business Administration is activating its disaster loan program only for private non-profit organizations that provide essential services of a governmental nature. I find that Cedar, Douglas, Greeley, Howard, Jefferson, McPherson, Perkins, Platte, Stanton, and Thayer Counties in the State of Nebraska constitute a disaster area due to damages caused by severe storms and tornadoes occurring from June 9, 2003 and continuing through July 14, 2003. Applications for loans for physical damage as a result of this disaster may be filed until the close of business on September 19, 2003, at the address listed below or other locally announced locations: Small Business Administration, Disaster Area 3 Office, 4400 Amon Carter Blvd., Suite 102, Ft. Worth, TX 76155.

The interest rates are:

For physical damage:	Percent
Non-profit Organizations Without Credit Available Elsewhere	*2.953*
Non-profit Organizations With Credit Available Elsewhere	*5.500*

The number assigned to this disaster for physical damage is P01111.

(Catalog of Federal Domestic Assistance Program Nos. 59008).

Dated: July 24, 2003.

Herbert L. Mitchell,

Associate Administrator for Disaster Assistance.

[FR Doc. 03–19465 Filed 7–30–03; 8:45 am]

BILLING CODE 8025–01–P

SMALL BUSINESS ADMINISTRATION

[Declaration of Disaster #3531, Amdt. 1]

State of Texas

In accordance with a notice received from the Department of Homeland Security—Federal Emergency Management Agency, effective July 23, 2003, the above numbered declaration is hereby amended to include Bee, Brazoria, Galveston and Goliad counties as disaster areas due to damages caused by Hurricane Claudette occurring on July 15, 2003, and continuing.

In addition, applications for economic injury loans from small businesses located in the contiguous counties of Chambers, Fort Bend, Harris, Karnes, and Live Oak in the State of Texas may be filed until the specified date at the previously designated location. Colorado County has also been determined to be contiguous to a previously declared county and applications for economic injury loans from small businesses may be filed until the specified date at the previously designated location. All other counties contiguous to the above named primary counties have been previously declared.

All other information remains the same, *i.e.,* the deadline for filing applications for physical damage is September 16, 2003, and for economic injury the deadline is April 19, 2004.

(Catalog of Federal Domestic Assistance Program Nos. 59002 and 59008).

Dated: July 24, 2003.

Herbert L. Mitchell,

Associate Administrator for Disaster Assistance.

[FR Doc. 03–19466 Filed 7–30–03; 8:45 am]

BILLING CODE 8025–01–P

DEPARTMENT OF TRANSPORTATION

Federal Aviation Administration

Agency Information Collection Activity Under OMB Review

AGENCY: Federal Aviation Administration (FAA), DOT.

ACTION: Notice.

SUMMARY: In compliance with the Paperwork Reduction Act of 1995 (44 U.S.C. 3501 *et. seq.*), this notice announces that the Information Collection Request (ICR) abstracted below has been forwarded to the Office of Management and Budget (OMB) for extension of the currently approved collection. The ICR describes the nature of the information collection and the expected burden. The **Federal Register** notice with a 60-day comment period soliciting comments on the following collection of information was published on April 17, 2003, on page 19066.

DATES: Comments must be submitted on or before September 2, 2003. A comment to OMB is most effective if OMB receives it within 30 days of publication.

FOR FURTHER INFORMATION CONTACT: Judy Street on (202) 267–9895.

SUPPLEMENTARY INFORMATION: Federal Aviation Administration (FAA)

Title: Financial Responsibility for Licensed Launch Activities.

Type of Request: Extension of a currently approved collection.

OMB Control Number: 2120–0661.

Forms(s): NA.

Affected Public: A total of 40 public agencies controlling medium or large hub airports.

Abstract: This information is needed to meet the requirements of Title 49, Section 40117(k), Competition Plans, and to carry out a passenger facility charge application. No Passenger Facility Charge (PFC) may be approved for a covered airport and no Airport Improvement Program (AIP) grant may be made for a covered airport unless the airport has submitted a written competition plan in accordance with the statute. The affected public includes public agencies controlling medium or large hub airports.

Estimated Annual Burden Hours: An estimated 3,240 hours annually.

ADDRESSES: Send comments to the Office of Information and Regulatory Affairs, Office of Management and Budget, 725 17th Street, NW., Washington, DC 20503, Attention FAA Desk Officer.

Comments are invited on: Whether the proposed collection of information is necessary for the proper performance of the functions of the Department, including whether the information will have practical utility; the accuracy of the Department's estimates of the burden of the proposed information collection; ways to enhance the quality, utility and clarity of the information to be collection; and ways to minimize the burden of the collection of information on respondents, including the use of automated collection techniques or other forms of information technology.

Dated: Issued in Washington, DC, on July 24, 2003.

Judith D. Street,

FAA Information Collection Clearance Officer, Standards and Information Division, APF–100.

[FR Doc. 03–19526 Filed 7–30–03; 8:45 am]

BILLING CODE 4910–13–M

DEPARTMENT OF TRANSPORTATION

Federal Aviation Administration

Notice of Intent To Rule on Application 03–05–C–00–EUG To Impose and Use the Revenue From a Passenger Facility Charge (PFC) at Mahlon Sweet Field, Submitted by the City of Eugene, Mahlon Sweet Field, Eugene, OR

AGENCY: Federal Aviation Administration (FAA), DOT.

ACTION: Notice of Intent to Rule on Application.

SUMMARY: The FAA proposes to rule and invites public comment on the application to impose and use PFC revenue at Mahlon Sweet Field under the provisions of 49 U.S.C. 40117 and part 158 of the Federal Aviation Regulations (14 CFR part 158).

DATES: Comments must be received on or before September 2, 2003.

ADDRESSES: Comments on this application may be mailed or delivered in triplicate to the FAA at the following address: Mr. J. Wade Bryant, Manager; Seattle Airports District Office, SEA–ADO; Federal Aviation Administration; 1601 Lind Avenue SW., Suite 250, Renton, Washington 98055–4506.

In addition, one copy of any comments submitted to the FAA must be mailed or delivered to Mr. Robert Noble, Airport Manager, at the following address: 28855 Lockheed Drive, Eugene, Oregon 97402.

Air carriers and foreign air carriers may submit copies of written comments previously provided to Mahlon Sweet Field, under § 158.23 of part 158.

FOR FURTHER INFORMATION CONTACT: Ms. Suzanne Lee-Pang, (425) 227–2654, Seattle Airports District Office, SEA–AD0; Federal Aviation Administration; 1601 Lind Avenue SW, Suite 250, Renton, Washington 98055–4056. The application may be reviewed in person at this same location.

SUPPLEMENTARY INFORMATION: The FAA proposes to rule and invites public comment on the application 03–05–C–00–EUG to impose and use PFC revenue at Mahlon Sweet Field, under the provisions of 49 U.S.C. 40117 and part 158 of the Federal Aviation Regulations (14 CFR part 158).

On July 25, 2003, the FAA determined that the application to impose and use the revenue from a PFC submitted by City of Eugene, Mahlon Sweet Field, Eugene, Oregon, was substantially complete within the requirements of § 158.25 of part 158. The FAA will approve or disapprove the application, in whole or in part, no later than October 25, 2003.

The following is a brief overview of the application: Level of the proposed PFC: $4.50. Proposed charge effective date: January 1, 2004. Proposed charge expiration date: October 31, 2005. Total requested for use approval: $2,032,935. Brief description of proposed project: Parallel runway 16L/34R construction, Construct and expand apron.

Class or classes of air carriers which the public agency has requested not be required to collect PFC's: Operations by Air Taxi/Commercial Operators utilizing aircraft having a maximum seating capacity of less than twenty passengers when enplaning revenue passengers in a limited, irregular/non-scheduled, or special service manner. Also exempted are operations by Air Taxi/Commercial Operators, without regard to seating capacity, for revenue passengers transported for student instruction, non-stop sightseeing flights that begin and end at the airport and are conducted within a 25 mile radius of the same airport, fire fighting charters, ferry or training flights, air ambulance/medivac flights and aerial photography or survey flights.

Any person may inspect the application in person at the FAA office listed above under **FOR FURTHER INFORMATION CONTACT** and at the FAA Regional Airports Office located at: Federal Aviation Administration, Northwest Mountain Region, Airports Division, ANM–600, 1601 Lind Avenue SW., Suite 315, Renton, WA 98055–4056.

In addition, any person may, upon request, inspect the application, notice and other documents germane to the application in person at the Mahlon Sweet Field.

Issued in Renton, Washington on July 25, 2003.

David A. Field,

Manager, Planning, Programming and Capacity Branch, Northwest Mountain Region.

[FR Doc. 03–19529 Filed 7–30–03; 8:45 am]

BILLING CODE 4910–13–M

DEPARTMENT OF TRANSPORTATION

Federal Aviation Administration

Policy Statement on Standardization of Application Regarding Hazardous Misleading Heading Information for Attitude-Heading Reference Systems (AHRS); PS–ACE100–2002–003

AGENCY: Federal Aviation Administration, DOT.

ACTION: Notice of issuance of policy.

SUMMARY: This document announces the issuance of PS–ACE100–2002–003. The purpose of this policy statement is to clarify Federal Aviation Administration certification policy on the application of AC 23.1309–1C, Equipment, Systems, and Installations in Part 23 Airplanes, regarding hazardous misleading heading information.

DATES: PS–ACE100–2002–003 was issued by the Manager, Small Airplane Directorate on May 30, 2003.

ADDRESSES: A paper copy of PS–ACE100–2002–003 may be obtained by contacting Mr. Erv Dvorak, Standards Office, Small Airplane Directorate, Aircraft Certification Service, Kansas City, Missouri 64106, telephone (816) 329–4123, fax (816) 329–4090. The policy will also be available on the Internet at *http://www.airweb.faa.gov/policy.*

Issued in Kansas City, Missouri on July 15, 2003.

Michael Gallagher,

Manager, Small Airplane Directorate, Aircraft Certification Service.

[FR Doc. 03–19528 Filed 7–30–03; 8:45 am]

BILLING CODE 4910–13–P

DEPARTMENT OF TRANSPORTATION

National Highway Traffic Safety Administration

[Docket No. NHTSA–2003–15783]

Decision That Certain Nonconforming Motor Vehicles Are Eligible for Importation

AGENCY: National Highway Traffic Safety Administration (NHTSA), DOT.

ACTION: Notice of decision by NHTSA that certain nonconforming motor vehicles are eligible for importation.

SUMMARY: This document announces decisions by NHTSA that certain motor vehicles not originally manufactured to comply with all applicable Federal motor vehicle safety standards are eligible for importation into the United States because they are either (1) substantially similar to vehicles originally manufactured for importation into and/or sale in the United States and certified by their manufacturers as complying with the safety standards, and they are capable of being readily altered to conform to the standards, or (2) they have safety features that comply with, or are capable of being altered to comply with, all such standards.

DATES: These decisions are effective as of the date of their publication in the **Federal Register**.

FOR FURTHER INFORMATION CONTACT: Coleman Sachs, Office of Vehicle Safety Compliance, NHTSA (202–366–3151).

SUPPLEMENTARY INFORMATION:

Background

Under 49 U.S.C. 30141(a)(1)(A), a motor vehicle that was not originally manufactured to conform to all applicable Federal motor vehicle safety standards shall be refused admission into the United States unless NHTSA has decided that the motor vehicle is substantially similar to a motor vehicle originally manufactured for importation into and sale in the United States, certified under 49 U.S.C. 30115, and of the same model year as the model of the motor vehicle to be compared, and is capable of being readily altered to conform to all applicable Federal motor vehicle safety standards.

Where there is no substantially similar U.S.-certified motor vehicle, 49 U.S.C. 30141(a)(1)(B) permits a nonconforming motor vehicle to be admitted into the United States if its safety features comply with, or are capable of being altered to comply with, all applicable Federal motor vehicle safety standards based on destructive test data or such other evidence as NHTSA decides to be adequate.

Petitions for eligibility decisions may be submitted by either manufacturers or importers who have registered with NHTSA pursuant to 49 CFR part 592. As specified in 49 CFR 593.7, NHTSA publishes notice in the **Federal Register** of each petition that it receives, and affords interested persons an opportunity to comment on the petition. At the close of the comment period, NHTSA decides, on the basis of the petition and any comments that it has received, whether the vehicle is eligible for importation. The agency then publishes this decision in the **Federal Register**.

NHTSA received petitions from registered importers to decide whether the vehicles listed in Annex A to this notice are eligible for importation into the United States. To afford an opportunity for public comment, NHTSA published notice of these petitions as specified in Annex A. The reader is referred to those notices for a thorough description of the petitions. No comments were received in response to these notices. Based on its review of the information submitted by the petitioners, NHTSA has decided to grant the petitions.

Vehicle Eligibility Number for Subject Vehicles

The importer of a vehicle admissible under any final decision must indicate on the form HS–7 accompanying entry the appropriate vehicle eligibility number indicating that the vehicle is eligible for entry. Vehicle eligibility numbers assigned to vehicles admissible under this decision are specified in Annex A.

Final Decision

Accordingly, on the basis of the foregoing, NHTSA hereby decides that each motor vehicle listed in Annex A to this notice, which was not originally manufactured to comply with all applicable Federal motor vehicle safety standards, is either (1) substantially similar to a motor vehicle manufactured for importation into and/or sale in the United States, and certified under 49 U.S.C. 30115, as specified in Annex A, and is capable of being readily altered to conform to all applicable Federal motor vehicle safety standards or (2) has safety features that comply with, or are capable of being altered to comply with, all applicable Federal motor vehicle safety standards.

Authority: 49 U.S.C. 30141(a)(1)(A), (a)(1)(B), and (b)(1); 49 CFR 593.8; delegations of authority at 49 CFR 1.50 and 501.8.

Issued on: July 28, 2003.

Kenneth N. Weinstein,

Associate Administrator for Enforcement.

Annex A

Nonconforming Motor Vehicles Decided To Be Eligible for Importation

1. Docket No. NHTSA–2003–15172

Nonconforming Vehicle: 2001–2003 Mercedes Benz Type 463 short wheel base (SWB) Gelaendewagen Multi-Purpose Passenger Vehicles (Cabriolet and the Three Door Models)

Because there are no substantially similar U.S.-certified versions of the 2001–2003 Mercedes Benz Type 463 short wheel base (SWB) Gelaendewagen, the petition sought import eligibility under 49 U.S.C. 30141(a)(1)(B).

Notice of Petition Published at: 68 FR 28877 (May 27, 2003)

Vehicle Eligibility Number: VCP–25

2. Docket No. NHTSA–2003–15353

Nonconforming Vehicles: 2002 BMW Z8 Passenger Cars

Substantially similar U.S.-certified vehicle: 2002 BMW Z8 Passenger Cars

Notice of Petition Published at: 68 FR 34477 (June 9, 2003)

Vehicle Eligibility Number: VSP–406

3. Docket No. NHTSA–2003–15386

Nonconforming Vehicle: 2001 Ducati Monster 600 Motorcycles

Substantially similar U.S.-certified vehicle: 2001 Ducati Monster 600 Motorcycles

Notice of Petition Published at: 68 FR 35773 (June 16, 2003)

Vehicle Eligibility Number: VSP–407

[FR Doc. 03–19524 Filed 7–30–03; 8:45 am]

BILLING CODE 4910–59–P

DEPARTMENT OF TRANSPORTATION

Surface Transportation Board

Notice of Public Information Collection Submitted to OMB for Review

AGENCY: Surface Transportation Board, DOT.

ACTION: Extension of a currently approved collection.

SUMMARY: The Surface Transportation Board has submitted to the Office of Management and Budget for review and approval the following proposal for collection of information as required by the Paperwork Reduction Act of 1995, Public Law 104–13 (44 U.S.C. Chapter 35).

Title: Financial Assistance of Railroad Lines.

OMB Form Number: 2140–0003.

No. of Respondents: 9.

Total Burden Hours: 315.

DATES: Persons wishing to comment on this information collection should submit comments by September 2, 2003.

ADDRESSES: Direct all comments to the Surface Transportation Board, Room 705, 1925 K Street, NW., Washington, DC 20423. When submitting comments refer to the OMB number and title of the information collection.

FOR FURTHER INFORMATION CONTACT: Barbara G. Saddler, (202) 565–1656. Requests for copies of the information collection may be obtained by contacting Barbara G. Saddler (202) 565–1656.

SUPPLEMENTARY INFORMATION: The Surface Transportation Board is, by statute, responsible for the economic regulation of surface transportation carriers operating in interstate and foreign commerce. The ICC Termination Act of 1995, Public Law 104–88, 109 Stat. 803 (1995), which took effect on January 1, 1996, abolished the Interstate Commerce Commission and transferred the responsibility for regulating rail transportation, including the proposed abandonment and discontinuance of rail lines, to the Surface Transportation Board. The Board needs, in each abandonment exemption proceeding, a detailed map of the rail line, depicting its relation to other rail lines, roads,

water routes, and population centers. The Board will use the information concerning the value of the property involved if necessary to set the fair market value of the property and conditions of sale or the terms of the subsidy. Interested parties have a statutory right to file offers of financial assistance. The Board has the Congressionally mandated responsibility to handle offers of financial assistance. The consequences of failure to collect data related to offers of financial assistance will be an inability to fulfill responsibilities under 49 U.S.C. 10904.

Dated: July 28, 2003.

Vernon A. Williams,

Secretary.

[FR Doc. 03–19434 Filed 7–30–03; 8:45 am]

BILLING CODE 4195–00–P

DEPARTMENT OF TRANSPORTATION

Surface Transportation Board

Notice of Public Information Collection Submitted to OMB for Review

AGENCY: Surface Transportation Board, DOT.

ACTION: Extension of a currently approved collection.

SUMMARY: The Surface Transportation Board has submitted to the Office of Management and Budget for review and approval the following proposal for collection of information as required by the Paperwork Reduction Act of 1995, Public Law 104–13 (44 U.S.C. Chapter 35).

Title: Maps To Be Submitted in Abandonment Exemption Proceedings.

OMB Form Number: 2140–0008.

No. of Respondents: 54.

Total Burden Hours: 54.

DATES: Persons wishing to comment on this information collection should submit comments by September 2, 2003.

ADDRESSES: Direct all comments to the Surface Transportation Board, Room 706, 1925 K Street, NW., Washington, DC 20423. When submitting comments refer to the OMB number and title of the information collection.

FOR FURTHER INFORMATION CONTACT: Barbara G. Saddler, (202) 565–1656. Requests for copies of the information collection may be obtained by contacting Barbara G. Saddler (202) 565–1656.

SUPPLEMENTARY INFORMATION: The Surface Transportation Board is, by statute, responsible for the economic regulation of surface transportation carriers operating in interstate and foreign commerce. The ICC Termination Act of 1995, Public Law 104–88, 109 Stat. 803 (1995), which took effect on January 1, 1996, abolished the Interstate Commerce Commission and transferred the responsibility for regulating rail transportation, including the proposed abandonment and discontinuance of rail lines, to the Surface Transportation Board. The Board needs, in each abandonment exemption proceeding, a detailed map of the rail line, depicting its relation to other rail lines, roads, water routes, and population centers. The Board will use this information to facilitate informed decision making. Respondents will be railroads initiating abandonment exemption proceedings.

Dated: July 28, 2003.

Vernon A. Williams,

Secretary.

[FR Doc. 03–19435 Filed 7–30–03; 8:45 am]

BILLING CODE 4915–00–P

DEPARTMENT OF TRANSPORTATION

Surface Transportation Board

Notice of Public Information Collection Submitted to OMB for Review

AGENCY: Surface Transportation Board, DOT.

ACTION: Extension of a currently approved collection.

SUMMARY: The Surface Transportation Board has submitted to the Office of Management and Budget for review and approval the following proposal for collection of information as required by the Paperwork Reduction Act of 1995, Pub. L. 04–13 (44 U.S.C. chapter 35).

Title: System Diagram Maps.

OMB Form Number: 2140–0003.

No. of Respondents: 13.

Total Burden Hours: 58.5.

DATES: Persons wishing to comment on this information collection should submit comments by September 2, 2003.

ADDRESSES: Direct all comments to the Surface Transportation Board, Room 705, 1925 K Street, NW., Washington, DC 20423. When submitting comments refer to the OMB number and title of the information collection.

FOR FURTHER INFORMATION CONTACT: Barbara G. Saddler, (202) 565–1656. Requests for copies of the information collection may be obtained by contacting Barbara G. Saddler (202) 565–1656.

SUPPLEMENTARY INFORMATION: The Surface Transportation Board is, by statute, responsible for the economic regulation of surface transportation carriers operating in interstate and foreign commerce. The ICC Termination Act of 1995, Pub. L. 104–88, 109 Stat. 803 (1995), which took effect on January 1, 1996, abolished the Interstate Commerce Commission and transferred the responsibility for regulating rail transportation, including the proposed abandonment and discontinuance of rail lines, to the Surface Transportation Board. All railroads are required to keep current system diagram maps on file. These maps designate all lines in a particular railroad's system according to various categories. Carriers are obligated to amend these maps as the need to change the categories of particular lines arises. If no amendment had taken place within a 1-year period, a verified statement to that effect must be filed with the Board. The Board will use this information to facilitate informed decision making. Respondents will be railroads initiating abandonment exemption proceedings.

Dated: July 28, 2003.

Vernon A. Williams,

Secretary.

[FR Doc. 03–19496 Filed 7–30–03; 8:45 am]

BILLING CODE 4915–00–P

DEPARTMENT OF VETERANS AFFAIRS

Enhanced-Use Lease Development of Property at the Department of Veterans Affairs Medical Center, Syracuse, NY

AGENCY: Department of Veterans Affairs.

ACTION: Notice of intent to designate.

SUMMARY: The Secretary of the Department of Veterans Affairs (VA) intends to designate approximately 0.57 acres of land at the Department of Veterans Affairs Medical Center, Syracuse, New York, for an enhanced-use leasing development. The Department intends to enter into a 75-year lease of real property with a selected lessee/developer who will finance, design, develop, maintain and manage a biotechnology research facility, at no cost to VA.

FOR FURTHER INFORMATION CONTACT: Vanessa Chambers, Capital Asset Management and Planning Service (182C), Department of Veterans Affairs, 810 Vermont Avenue, NW., Washington, DC 20420, (202) 565–6554.

SUPPLEMENTARY INFORMATION: 38 U.S.C. section 8161 *et seq.* specifically provides that the Secretary may enter into an enhanced-use lease if he determines that at least part of the use of the property under the lease will be to provide appropriate space for an activity contributing to the mission of

the Department; the lease will not be inconsistent with and will not adversely affect the mission of the Department; and the lease will enhance the property or result in improved services to veterans. This project meets these requirements.

Approved: July 23, 2003.

Anthony J. Principi,

Secretary of Veterans Affairs.

[FR Doc. 03–19442 Filed 7–30–03; 8:45 am]

BILLING CODE 8320–01–M

Corrections

Federal Register

Vol. 68, No. 147

Thursday, July 31, 2003

This section of the FEDERAL REGISTER contains editorial corrections of previously published Presidential, Rule, Proposed Rule, and Notice documents. These corrections are prepared by the Office of the Federal Register. Agency prepared corrections are issued as signed documents and appear in the appropriate document categories elsewhere in the issue.

DEPARTMENT OF HEALTH AND HUMAN SERVICES

Administration for Children and Families

[Program Announcement No. ACYF/HS–2003–16]

Fiscal Year 2003 Discretionary Announcement for Head Start—Higher Education Hispanic/Latino Service Partnerships: Availability of Funds and Request for Applications

Correction

In notice document 03–18166 beginning on page 43120 in the issue of Monday, July 21, 2003 make the following correction:

On page 43120, in the first column, in the DATES section, in the fourth line, ''August 18, 2003'' should read ''August 20, 2003''.

[FR Doc. C3–18166 Filed 7–30–03; 8:45 am]

BILLING CODE 1505–01–D

Federal Register

Thursday,
July 31, 2003

Part II

Department of Transportation

Research and Special Programs Administration

49 CFR Parts 171, et al.

Harmonization With the United Nations Recommendations, International Maritime Dangerous Goods Code, and International Civil Aviation Organization's Technical Instructions; Final Rule

DEPARTMENT OF TRANSPORTATION

Research and Special Programs Administration

49 CFR Parts 171, 172, 173, 175, 176, 178 and 180

[Docket No. RSPA–2002–13658 (HM–215E)]

RIN 2137–AD41

Harmonization With the United Nations Recommendations, International Maritime Dangerous Goods Code, and International Civil Aviation Organization's Technical Instructions

AGENCY: Research and Special Programs Administration (RSPA), DOT.

ACTION: Final rule.

SUMMARY: RPSA is amending the Hazardous Materials Regulations (HMR) to maintain alignment with international standards by incorporating various amendments, including changes to proper shipping names, hazard classes, packing groups, special provisions, packaging authorizations, air transport quantity limitations and vessel stowage requirements. Because of recent changes to the International Maritime Dangerous Goods Code (IMDG Code), the International Civil Aviation Organization's Technical Instructions for the Safe Transport of Dangerous Goods by Air (ICAO Technical Instructions), and the United Nations Recommendations on the Transport of Dangerous Goods (UN Recommendations), these revisions are necessary to facilitate the transport of hazardous materials in international commerce.

DATES: *Effective Date:* The effective date of these amendments is October 1, 2003.

Voluntary Compliance Date: RSPA is authorizing immediate voluntary compliance. However, RSPA may further revise this rule as a result of appeals it may receive for this rule.

Delayed Compliance Date: Unless otherwise specified, compliance with the amendments adopted in this final rule is mandatory October 1, 2004.

Incorporation by Reference Date: The incorporation by reference of the publication adopted in § 171.7 of this final rule has been approved by the Director of the Federal Register as of October 1, 2003.

FOR FURTHER INFORMATION CONTACT: Joan McIntyre, Office of Hazardous Materials Standards, telephone (202) 366–8553, or Shane Kelley, International Standards, telephone (202) 366–0656, Research and Special Programs Administration, U.S. Department of Transportation, 400 Seventh Street, SW., Washington, DC 20590–0001.

SUPPLEMENTARY INFORMATION:

I. Background

On December 3, 2002, the Research and Special Programs Administration (RSPA, we) published a notice of proposed rulemaking (NPRM) (67 FR 72034) under Docket HM–215E. The NPRM proposed changing the Hazardous Materials Regulations (HMR), 49 CFR parts 171–180, to align it with updates and revisions to the UN Recommendations, the IMDG Code and the ICAO Technical Instructions with respect to hazard communication, classification, and packaging requirements. Our intent was to facilitate the international transportation of hazardous materials by ensuring a basic consistency between the HMR and international standards, while at the same time ensuring the safe transportation of hazardous materials.

On January 8, 2003, we published a final rule under Docket HM–215E (68 FR 1013) authorizing the use of the 2003–2004 edition of the ICAO Technical Instructions, Amendment 31 to the IMDG Code, and the twelfth revised edition of the UN Recommendations beginning January 1, 2003, the effective date of the international standards.

The UN Recommendations are not regulations, but rather are recommendations issued by the UN Committee of Experts on the Transport of Dangerous Goods. These recommendations are amended and updated biennially by the UN Committee of Experts. They serve as the basis for National, regional, and international modal regulations; specifically, the IMDG Code developed by the International Maritime Organization (IMO) Dangerous Goods, Solid Cargoes and Containers Subcommittee, and the ICAO Technical Instructions developed by the ICAO Dangerous Goods Panel. Subject to certain conditions and limitations, § 171.12 of the HMR authorizes domestic transportation of hazardous materials shipments prepared in accordance with the IMDG Code if all or part of the transportation is by vessel. Subject to certain conditions and limitations, § 171.11 of the HMR authorizes the offering, acceptance and transport of hazardous materials by aircraft, and by motor vehicle either before or after being transported by aircraft, provided the shipment is in accordance with the ICAO Technical Instructions.

On December 21, 1990, RSPA published a final rule (Docket HM–181; 55 FR 52402) based on the UN Recommendations, which comprehensively revised the HMR for harmonization with international standards. Since publication of the 1990 final rule, we have issued four additional international harmonization final rules (Dockets HM–215A, 59 FR 67390; HM–215B, 62 FR 24690; HM–215C, 64 FR 10742; and HM–215D, 66 FR 33316). The rules provided additional harmonization with international transportation requirements by more fully aligning the HMR with the corresponding biennial updates of the UN Recommendations, the IMDG Code and the ICAO Technical Instructions.

The large volume of hazardous materials transported in international commerce warrants the harmonization of domestic and international requirements to the greatest extent possible. Harmonization serves to facilitate international transportation, reduces cost to industry, and ensures the safety of people, property and the environment. While the intent of the harmonization rulemakings is to align the HMR with international standards, we review and consider each amendment on its own merit. Each amendment is considered on the basis of the overall impact on transportation safety and the economic implications associated with its adoption into the HMR. Our goal is to harmonize without sacrificing the current HMR level of safety and without imposing undue burdens on the regulated public. In our efforts to continue to align the HMR with international requirements, this final rule makes changes to the HMR based on the twelfth revised edition of the UN Recommendations, Amendment 31 to the IMDG Code, and the 2003–2004 ICAO Technical Instructions, which became effective January 1, 2003. Petitions for rulemaking concerning harmonization with international standards and the facilitation of international transportation are also addressed in this final rule and serve as the basis of certain amendments. Other amendments are based on feedback from the regulated industry, other DOT modal administrations and our initiative. Also included are various editorial clarifications. Unless otherwise stated, the revisions are for harmonization with international standards.

Various commenters raised issues that are beyond the scope of this rulemaking. Such issues will not be addressed in this final rule and must first be addressed in an NPRM to afford industry and the public opportunity to comment.

II. Overview of Changes in this Final Rule

Amendments to the HMR in This final rule include, but are not limited to the following:

- Amendments to the Hazardous Materials Table (HMT) which add, revise or remove certain proper shipping names, hazard classes, packing groups, special provisions, packaging authorizations, bulk packaging requirements, passenger and cargo aircraft maximum quantity limitations and vessel stowage provisions.
- Amendments to the List of Marine Pollutants.
- Revisions and additions of special provisions. Included is the addition of a special provision for assignment to aerosol entries setting forth the criteria for classifying aerosols.
- Addition of a requirement to enter the subsidiary hazard class or subsidiary division number on shipping papers.
- Addition of a requirement to indicate the number and types of packagings on shipping papers.
- Addition of an alternative basic description sequence on shipping papers.
- Revision of marking requirements for limited quantities.
- Addition of an air eligibility marking requirement.
- Revision of requirements in § 173.27 for packagings intended for transportation by aircraft, including revision of requirements for use of absorbent material for such packagings.
- Revision to the classification of air bag modules, air bag inflators and seat-belt pretensioners from Division 2.2 to Class 9.
- Revision of the non-liquefied and liquefied compressed gases descriptions, and the addition of high pressure and low pressure liquefied gases categories.
- Revisions and additions to the Self-Reactive Materials Table.
- Revisions and additions to the Organic Peroxide Table.
- Revision of the net weight restrictions for explosives in freight containers exceeding 20 ft (6 m) in length.

III. Summary of Regulatory Changes by Section

Part 171

Section 171.6. We are revising the table in paragraph (b)(2) to incorporate a new information collection, OMB No. 2137–0613, ''Subsidiary Hazard Class and Number/Type of Packagings,'' and the affected sections, §§ 172.202 and 172.203.

Section 171.7. We are adding Regulation 19 of an IMO standard titled ''International Convention for the Safety of Life at Sea,'' 1974, as amended, Chapter II–2. Regulation 19 is incorporated into a new paragraph (f) in § 176.63 to address hatchless container ship requirements.

Section 171.8. In the definition for ''Large packaging,'' we are adding the words ''Chapter 6.6'' to let readers know the location in the UN Recommendations for the construction, testing and marking of such packagings.

Section 171.11. We are revising paragraphs (c), (d)(5) and (d)(17) to address certain limitations for the use of the ICAO Technical Instructions.

In paragraph (c), for hazardous materials being transported in accordance with the ICAO Technical Instructions, the restrictions for the use of the Instructions are revised to include hazardous materials that are forbidden by passenger and cargo aircraft, as designated in Columns (9A) and (9B) of the § 172.101 HMT. Prior to this revision, the paragraph restricted materials that are forbidden according to § 173.21 and Column (3) of the HMT only.

In paragraph (d)(5), we are removing the wording ''except for Division 2.2'' relating to shipping paper requirements for air bag inflators, air bag modules and seat-belt pretensioners. This amendment is consistent with the removal of the Division 2.2 air bag inflator, air bag module and seat-belt pretensioner entry in the HMT (see § 172.101).

Paragraph (d)(17) is revised to clarify the current requirement that, in addition to organic peroxides, self-reactive substances not specifically identified by name in § 173.224(b) also must be approved by the Associate Administrator in accordance with the requirements in § 173.124(a)(2)(iii).

Section 171.12. We are revising paragraphs (b)(3), (b)(19), and (b)(20).

In paragraph (b)(3), we are removing certain viscous flammable liquids as an example of a material designated as a hazardous material subject to the HMR, but not subject to the IMDG Code. The IMO removed the exception in Amendment 31 to the IMDG Code.

In paragraph (b)(19), we are removing the wording ''except for Division 2.2'' relating to shipping paper requirements for air bag inflators, air bag modules and seat-belt pretensioners. This revision is consistent with the removal of the Division 2.2 air bag inflator, air bag module and seat-belt pretensioner entry in the HMT (see § 172.101).

In paragraph (b)(20), we are clarifying the current requirement that, in addition to organic peroxides, self-reactive substances not specifically identified by name in § 173.224(b) must also be approved by the Associate Administrator in accordance with the requirements in § 173.124(a)(2)(iii).

For the readers' information, recently adopted amendments to the International Convention for the Safety of Life at Sea (SOLAS), 1974, as amended, will require mandatory of the use of the IMDG Code effective January 1, 2004. This issue will be addressed under a separate rulemaking.

Section 171.12a. We are revising paragraph (b)(18) to clarify the existing requirement that, in addition to organic peroxides, self-reactive substances not specifically identified by name in § 173.224(b) also must be approved by the Associate Administrator in accordance with the requirements in § 173.124(a)(2)(iii).

Section 171.14. We are revising paragraphs (d), (d)(1), (d)(2), (d)(4), and (d)(5). We received several comments concerning the proposed transitional provisions. Several commenters requested that we implement an overall two-year transition period from the October 1, 2003 effective date, and several commenters requested an overall three-year transition period. In the NPRM, we proposed a mandatory compliance date of October 1, 2004.

While we do not agree that all amendments require an additional extended compliance date, we do agree that certain amendments warrant the additional time. We are, therefore, authorizing an October 1, 2007 mandatory compliance date for the new requirement in § 172.202(a)(5) to include the number and types of packagings on shipping papers. This requirement was identified by commenters as requiring additional time to offset any associated burden. Additionally, we are adopting an October 1, 2007 transition date for modifications to package markings that will change as a result of changes to certain proper shipping names. We are also adopting an October 1, 2005 compliance date for use of proper shipping names that did not identify specific isomers by numbers or letters preceding the chemical name. Finally, we are authorizing an October 1, 2005 mandatory compliance date for the requirement to include the subsidiary hazard class or division number on shipping papers.

We are revising paragraphs (d) and (d)(1) to authorize an October 1, 2004 implementation date for the amendments in this final rule.

We are revising paragraph (d)(2) to authorize certain intermixing of old and new requirements until October 1, 2004.

We are revising paragraph (d)(4) to allow until June 1, 2010, DOT

Specification 51 portable tanks to conform with the T Codes (Special Provisions) in effect on September 30, 2001.

We are revising paragraph (d)(5) to allow proper shipping names that included the word ''inhibited'' prior to the June 21, 2001 final rule, to continue to be shown on packagings and shipping papers in place of the word ''stabilized'' until October 1, 2007. Additionally, the October 1, 2007 date applies to the proper shipping names in this final rule that are revised by removing the word ''compressed'' (see § 172.101, HMT).

Paragraph (d)(6) authorizes use of the shipping paper requirement to include the total quantity of packages on shipping papers until October 1, 2007.

Paragraph (d)(7) authorizes use of the non-mandatory provision to include the subsidiary hazard class or division number on shipping papers until October 1, 2005.

Paragraph (d)(8) authorizes the marking of certain other proper shipping names on packagings until October 1, 2005. The proper shipping names are those that are revised to include the position identifiers of the substituents, such as 2-Ethylbutyl acetate (see § 172.101, HMT preamble discussion).

Part 172

Section 172.101. In the regulatory text preceding the Hazardous Materials Table, the following changes are made:

Paragraph (c)(15) is revised by removing the words ''of inorganic substances.'' Prior to this revision, unless a hydrate was specifically listed in the HMT, only hydrates of inorganic substances were authorized to be identified using the proper shipping name for the equivalent anhydrous substance, provided the hydrates met the same hazard class, division, subsidiary risk(s) and packaging group. With the removal of the phrase ''of inorganic substances,'' paragraph (c)(15) applies to all hydrates.

Section 172.101 Hazardous Materials Table (HMT). We are making various amendments to the HMT. Readers should review all changes for a complete understanding of the Table amendments. For purposes of the Government Printing Office's typesetting procedures, changes to the HMT will appear under three sections of the Table, ''remove,'' ''add'' and ''revise.'' Certain entries in the HMT, such as those with revisions to the proper shipping names, will appear as a ''remove'' and ''add.'' Amendments to the HMT for the purpose of harmonizing with international standards, unless otherwise stated, include, but are not limited to the following:

• ''*Accumulators, pressurized, pneumatic or hydraulic (containing non-flammable gas), see* Articles, pressurized, pneumatic *or* hydraulic (*containing non-flammable gas*)'' is added as a ''see'' entry into the HMT to aid the reader in locating the updated entry. This action is based on feedback we received from users of the HMR after we removed the domestic entry (''Accumulators, pressurized, pneumatic,'' UN1956), as well as certain other domestic entries from the HMT in a final rule, HM–215D (66 FR 33316), published June 21, 2001. The entries were removed because we determined that they were no longer necessary considering the HMT already includes equally appropriate international entries. (Also see § 173.306(f) for a related editorial revision.)

• ''Air bag inflators, compressed gas *or* Air bag modules, compressed gas *or* Seat-belt pretensioners, compressed gas,'' Division 2.2, UN3353 is removed. All air bag inflators, air bag modules and seat-belt pretensioners currently classified as Division 2.2 may be reclassified as Class 9. We are also incorporating into the HMR a provision to allow this reclassification without further testing (see § 173.166). In line with the removal of this entry, Special Provision 133 is also removed. We are aware that removal of the UN3353 entry will require repackaging, remarking and relabeling of all compressed gas air bag assemblies. We received a comment from the North American Automotive Hazmat Action Committee (NAAHAC) expressing this concern; however, the NAAHAC stated that the proposed mandatory compliance date of October 1, 2004, would be sufficient time to implement the new requirements. We also believe that the mandatory compliance date of October 1, 2004, and the transitional provisions in § 171.14(d)(2), authorizing certain intermixing of old and new requirements, will offer sufficient time and flexibility to implement the new requirements and reduce the costs of meeting this requirement.

• ''Air bag inflators, *pyrotechnic* or Air bag modules, *pyrotechnic or* Seat-belt pretensioner, *pyrotechnic*'' UN0503, Division 1.4G, is amended by removing the word ''pyrotechnic'' from the proper shipping names in Column (2), revising Columns (8A) and (8C) to read ''None,'' revising Column (8B) to read ''§ 173.62'' (also see § 173.62), adding new Special Provision 161 (see § 172.102), and revising the vessel stowage columns (10A) and (10B). We are adding Special Provision 161 because we believe that a more appropriate name is ''Articles, pyrotechnic *for technical purposes,*'' UN0431. We believe that an article meeting the criteria for Division 1.4G should be considered a pyrotechnic article and not an air bag. We received a comment from NAAHAC supporting this revision and stating that if an inflator does not pass the UN Recommendations' Series 6 test criteria, it is considered a pyrotechnic article and not an airbag. (Also see Special Provision 161.)

• ''Air bag inflators, *pyrotechnic* or Air bag modules, *pyrotechnic or* Seat-belt pretensioner, *pyrotechnic,*'' UN3268, Class 9, is amended by removing the descriptive word ''pyrotechnic'' and adding new Special Provision 160 (see § 172.102). NAAHAC requested that we retain the word ''pyrotechnic'' as a descriptive word in the shipping name to provide time for depletion of existing inventories. Although we are removing the word ''pyrotechnic'' in this rulemaking, we believe that extending the mandatory compliance date from October 1, 2004, as proposed in the NPRM, to October 1, 2005, as adopted in this final rule (see § 173.166(d)(5)), will provide the necessary time requested by the commenters.

• ''Ammonium nitrate, *with not more than 0.2% combustible substances, including any organic substance calculated as carbon to the exclusion of any other added substance*,'' UN1942 is amended by editorially correcting the italicized portion of the proper shipping name by adding the word ''total'' after ''0.2%.''

• ''Ammonium nitrate fertilizers,'' UN2071, and ''Ammonium nitrate fertilizers,'' UN2067 are amended by removing the italicized portion of the proper shipping names, adding new Special Provision 150 to the UN2067 entry, and revising Special Provision 132 which applies to the UN2071 entry (see § 172.102 for Special Provision amendments).

• ''Ammonium nitrate fertilizers,'' NA2072 and ''Ammonium nitrate mixed fertilizers,'' NA2069 are removed. We believe that the international entry ''Ammonium nitrate fertilizers,'' UN2067 can be used in place of the domestic entries, which do not provide any additional exceptions.

• A new entry, ''Ammonium nitrate emulsion *or* Ammonium nitrate suspension *or* Ammonium nitrate gel, *intermediate for blasting explosives*,'' UN3375 (also see § 172.102, Special Provisions 52 and 147) is added.

• For the entry ''Calcium hypochlorite, hydrated *or* Calcium hypochlorite, hydrated mixtures, *with*

not less than 5.5 percent but not more than 10 percent water,'' UN2880, the wording ''*not more than 10 percent water*'' is revised to read ''*not more than 16 percent water.*''

• Four proper shipping names are revised by adding the position identifiers of the substituents. The proper shipping names are ''Diethylaminopropylamine,'' position identifier ''3'; ''Dimethylcyclohexylamine,'' position identifiers ''N,N'; ''Ethylbutyl acetate,'' position identifier ''2''; ''Propyl chloride'' which is replaced by ''1-Chloropropane,'' and ''Tetrachloroethane,'' position identifiers ''1,1,2,2,''. Also, see § 171.14(d)(6) for the continued use provision of these proper shipping names.

• The entry ''Hydrazine hydrate *or* Hydrazine aqueous solutions, *with not less than 37 percent but not more than 64 percent hydrazine, by mass*,'' UN2030 and ''Hydrazine, anhydrous *or* Hydrazine aqueous solutions *with more than 64 percent hydrazine, by mass*,'' UN2029 are removed and ''Hydrazine aqueous solution, *with more than 37% hydrazine, by mass*,'' UN2030 and ''Hydrazine, anhydrous,'' UN2029'' are added.

• Eleven entries are revised by removing the qualifying word ''compressed.'' This action is consistent with the revisions to proper shipping names for compressed and liquefied gases that were incorporated into the Twelfth Edition of the UN Recommendations and which we are adopting into the HMR (see § 173.115 for additional discussion). The eleven entries are ''Boron trifluoride, compressed,'' UN1008; ''Carbonyl fluoride, compressed,'' UN2417; ''Diborane, compressed,'' UN1911; ''Ethylene, compressed,'' UN1962; ''Hexafluoroethane, compressed *or* Refrigerant gas R 116,'' UN2193; ''Nitrogen trifluoride, compressed,'' UN2451; ''Phosphorus pentafluoride, compressed,'' UN2198; ''Silane, compressed,'' UN2203; ''Silicon tetrafluoride, compressed,'' UN1859; ''Tetrafluoromethane, compressed *or* Refrigerant gas R 14,'' UN1982; and ''Xenon, compressed,'' UN2036. Also, see § 171.14(d)(6) for the continued use provision of these proper shipping names.

• For the proper shipping name ''Lighters *or* Lighter refills *cigarettes, containing flammable gas*,'' UN1057, the word ''cigarettes'' is removed.

• The proper shipping name ''Lithium hydroxide, monohydrate *or* Lithium hydroxide, solid,'' UN2680 is revised to read ''Lithium hydroxide.''

• For the entry ''Medicine, liquid, toxic, n.o.s.,'' UN1851, we are adding Special Provision 36. The special provision, which limits the maximum net quantity per package to 5 L (1 gal) for liquids and 5 kg (11 lbs) for solids, is currently assigned to ''Medicine, liquid, flammable, toxic, n.o.s.,'' UN3248 and ''Medicine, solid, toxic, n.o.s.,'' UN3249.

• For the entry ''Motor fuel anti-knock mixtures,'' UN1649, we are removing the subsidiary risk hazard from the labeling requirement, and adding new Special Provision 151. This action is based on a petition for rulemaking (P–1420) we received (see discussion under § 172.102).

• The proper shipping name ''Uranium nitrate hexahydrate solution,'' UN2980 is corrected by replacing the word ''Uranium'' with ''Uranyl.'' The typographical error occurred in the April 3, 2002 document published in the **Federal Register** (67 FR 15736).

• The entry ''Xylidines, solution,'' UN1711 is revised to read ''Xylidines, liquid.''

• In addition to those entries identified above, we are adding the following new entries: ''Chlorosilanes, toxic, corrosive, n.o.s.,'' UN3361; ''Chlorosilanes, toxic, corrosive, flammable, n.o.s.,'' UN3362; ''Ethylene glycol diethyl ether,'' UN1153; ''Fibers, animal *or* fibers, vegetable *burnt, wet or damp*,'' UN1372; ''Fibers, vegetable, dry,'' UN3360; ''4-Nitrophenylhydrazine, *with not less than 30% water, by mass*,'' UN3376; ''Organometallic compound, solid, water-reactive, flammable, n.o.s.,'' UN3372; ''Rags, oily,'' UN1856; ''Rubber scrap *or* Rubber shoddy, *powdered or granulated, not exceeding 840 microns and rubber content exceeding 45%*,'' UN1345; ''Sodium dinitro-o-cresolate, wetted, *with not less than 10% water by mass*,'' UN3369; ''Textile waste, wet,'' UN1857; ''Trinitrobenzene, wetted, *with not less than 10% water by mass*,'' UN3367; ''Trinitrobenzoic acid, wetted, *with not less than 10% water by mass*,'' UN3368; ''Trinitrochlorobenzene (picryl chloride), wetted, *with not less than 10% water by mass*,'' UN3365; ''Trinitrophenol (picric acid), wetted, *with not less than 10% water by mass*,'' UN3364; ''Trinitrotoluene (TNT), wetted, *with not less than 10% water by mass*,'' UN3366 and ''Wool waste, wet,'' UN1387.

• Various entries are amended by revising the vessel stowage columns (10A) and/or (10B). The entries include the following: the five ''Aerosols,'' UN1950 entries; ''Ammunition, smoke *with or without burster, expelling charge or propelling charge*,'' UN0303; ''Battery fluid, alkali,'' UN2797; ''Methacrylic acid, stabilized,'' UN2531; ''Sulfur, molten,'' UN2448; and ''Urea, nitrate, *wetted with not less than 20 percent water, by mass*,'' UN1357.

Also, see § 172.102 for additional HMT amendments.

Appendix B to § 172.101. In Appendix B to § 172.101, List of Marine Pollutants, we are revising paragraphs ''4'' and ''5'' to update the location in the IMDG Code for the ''Guidelines for the Identification of Harmful Substances in Packaged Form.'' This update is based on the IMDG Code's change in location from the General Introduction to Chapter 2.10.

In addition, we are removing the entries ''Alkylphenols, liquid, n.o.s. *(including C2–C12 homologues)*,'' ''Alkylphenols, solid, n.o.s. *(including C2–C12 homologues)*,'' ''Chlorophenols, liquid,'' and ''Chlorophenols, solid,'' from the List of Marine Pollutants. We are revising the entry ''Alkylbenzenesulphonates, branched and straight chain'' by adding a qualifying phrase to clarify that C11-C13 straight chain or branched chain homologues are not regulated as marine pollutants. Finally, we are adding the entry ''Decyl acrylate.''

Section 172.102. We are amending § 172.102, Special Provisions, as follows:

• Special Provisions 7 and 10 are removed. These special provisions are assigned to the entries ''Ammonium nitrate mixed fertilizers,'' NA2069 and ''Ammonium nitrate fertilizers,'' NA2072, respectively, which we are removing (see § 172.101, HMT).

• Special Provision 15, which is assigned to ''Chemical kits,'' UN3316 and ''First aid kits,'' UN3316, is revised for consistency with packagings authorized for limited quantity exceptions. We are also relocating the authorized packagings to § 173.161. Revised Special Provision 15 specifies (1) which chemical and first aid kits are properly described by the entries; (2) that materials forbidden by air may not be included in the kits when they are transported by air; and (3) that kits carried on board transport vehicles for first aid or operating purposes are not subject to the HMR.

• Special Provision 30 is revised to include an exception from the placarding requirements for ''Sulfur, molten'' UN2448 and ''Sulfur,'' UN1350. Prior to this change, the domestic entries ''Sulfur, molten,'' NA2448 and ''Sulfur,'' NA1350 did not require placards because both entries are Class 9 materials and meet the placarding exceptions for the hazard

class in § 172.504(f)(9). Revised Special Provision 30 provides the same placarding exceptions for the international entries provided the bulk packagings are marked in accordance with § 172.325.

• Special Provision 52 is editorially revised by removing the wording specific to fertilizers. The special provision, which is currently applied to ''Ammonium nitrate fertilizers,'' UN2067, is added to the new entry ''Ammonium nitrate emulsion *or* Ammonium nitrate suspension *or* Ammonium nitrate gel, *intermediate for blasting explosives,*'' UN3375. The special provision states that a material using the assigned entries may not exhibit explosive properties of Class 1 (explosive) when tested in accordance with the UN Manual of Tests and Criteria, Part I, Test Series 1 and 2.

• Special Provision 130, which excepts dry batteries from the HMR, is revised by adding a requirement that such batteries must be securely packed and protected against short circuits and by clarifying that dry batteries specifically named in the § 172.101 Table are not eligible for the exception.

• Special Provision 132 is revised to add the criteria for use of this special provision. The special provision is added to the revised entry ''Ammonium nitrate,'' UN2071, Class 9.

• Special Provision 133 is removed. This special provision was assigned to the entry ''Air bag inflators, compressed gas *or* Air bag modules, compressed gas *or* Seat-belt pretensioners, compressed gas'' UN3353, Division 2.2, which is removed from the HMT by this final rule (see discussion under § 172.101, HMT.)

• Existing Special Provision 134 is revised to include vehicles powered by lithium batteries. This revision is based on comments from Argonne National Laboratories and the Conference on Safe Transportation of Hazardous Articles.

• New Special Provision 145 is added to the existing entry ''Hydrogen peroxide and peroxyacetic acids mixtures, stabilized, *with acids, water and not more than 5 percent peroxyacetic acid,*'' UN3149. The special provision describes the formulations for which this entry apply.

• New Special Provision 146 is added to the entries ''Environmentally hazardous substances, liquid, n.o.s.,'' UN3082 and ''Environmentally hazardous substances, solid, n.o.s.,'' UN3077 to clarify that the entries may be used to describe a material that poses a hazard to the environment if it is designated as environmentally hazardous by the Competent Authority of the country of origin, transit or destination, even if it is not an environmentally hazardous substance under the HMR.

• New Special Provision 147 is added to the new entry, ''Ammonium nitrate emulsion *or* Suspension *or* Gel, *intermediate for blasting explosives,*'' UN3375. The special provision describes the composition of the material for which the use of the entry is authorized and prohibits the material from being classified and transported unless approved by the Associate Administrator.

• New Special Provision 149 is added to the Packing Group II entries for 13 existing proper shipping names. The special provision allows the maximum net capacity for inner packagings to be increased to no more than 5 L (1.3 gal) when the material is transported as a limited quantity. The National Paint and Coatings Association (NPCA) supports the increase for inner packagings, stating that the potential for errors will be greatly reduced by allowing the same quantity limits for PG II and PG III materials. However, NPCA, along with the Association of Hazmat Shippers and PPG Industries, requests that we clarify that the special provision is applicable to consumer commodities as well as limited quantities. We revised the special provision accordingly. The 13 entries are: ''Adhesives, *containing a flammable liquid,*'' UN1133; ''Coating solution *(includes surface treatments or coatings used for industrial or other purposes such as vehicle undercoating, drum or barrel lining),*'' UN1139; ''Extracts, aromatic, liquid,'' UN1169; ''Extracts, flavoring, liquid,'' UN1197; ''Printing ink, *flammable or* Printing ink related material *(including printing ink thinning or reducing compound), flammable,*'' UN1210; ''Paint *including paint, lacquer, enamel, stain, shellac solutions, varnish, polish, liquid filler, and liquid lacquer base,*'' UN1263; ''Paint related material *including paint thinning, drying, removing, or reducing compound,*'' UN1263; ''Perfumery products *with flammable solvents,*'' UN1266; ''Rubber solution,'' UN1287; ''Wood preservatives, liquid,'' UN1306; ''Resin solution, *flammable,*'' UN1866; ''Tars, liquid *including road asphalt and oils, bitumen and cut backs,*'' UN1999; and ''Polyester resin kit,'' UN3269 for Packing Group II resin kits as specified in Special Provision 40.

• New Special Provision 150 is added to the entry ''Ammonium nitrate based fertilizer,'' UN2067 to authorize the use of the entry for uniform mixtures containing ammonium nitrate as the main ingredient within certain composition limits.

• New Special Provision 151 is added to the new entry ''Hydrazine aqueous solution, *with more than 37% hydrazine, by mass*'' UN2030, Packing Group I and to the existing entry ''Motor fuel anti-knock mixtures,'' UN1649. This special provision requires a packaging containing a material meeting the definition of a flammable liquid to display a FLAMMABLE LIQUID label, and it requires a Class 3 subsidiary hazard to be shown on shipping papers.

With regard to the entry ''Motor fuel anti-knock mixtures,'' UN1649, as discussed in the NPRM, we received a petition for rulemaking (P–1420) requesting that we remove the flammable subsidiary risk for this entry. The petitioner stated that the international standards do not assign the entry a flammable subsidiary risk and that the inconsistency with the HMR causes a regulatory compliance burden when transporting the material internationally. The petitioner stated that removing the subsidiary risk is additionally justified because motor fuel anti-knock mixtures containing tetramethyl lead, with fire points greater than 54 °C (129.2 °F), are no longer manufactured or transported. Although the UN Recommendations, the ICAO Technical Instructions and the IMDG Code do not assign a flammable subsidiary risk to the entry, all three standards assign a special provision stating that mixtures with a flashpoint of less than 60.5 °C (141 °F) must bear a flammable liquid subsidiary risk label. We are removing the flammable subsidiary risk from the label requirements in Column (6) of the HMT for ''Motor fuel anti-knock mixtures,'' UN1649 and adding a new Special Provision 151 to require a FLAMMABLE LIQUID subsidiary label only when the mixtures have a flashpoint of less than 60.5 °C (140.9 °F). Also, see preamble text under the § 172.101 Table changes.

• New Special Provision 153 is added to the five ''Aerosols,'' UN1950 entries to provide the criteria for classifying aerosols.

• New Special Provision 155 is added to two entries, ''Fish meal, stabilized *or* Fish scrap, stabilized,'' UN2216 and ''Fish meal, unstabilized *or* Fish scrap, unstabilized,'' UN1374. The special provision specifies that the fish scrap or fish meal may not be transported if the temperature of fish scrap at the time of loading either exceeds 35 °C (95 °F), or exceeds 5 °C (41 °F) above the ambient temperature, whichever is higher. Also see § 173.218 for additional discussion.

• New Special Provision 156 is added to three entries, ''Blue asbestos (*Crocidolite*) or Brown asbestos (*amosite, mysorite*),'' UN2212, ''White

asbestos (*chrysotile, actinolite, anthophyllite, tremolite*),'' UN2590, and ''Asbestos,'' NA2212. The special provision provides an exception from the HMR for certain asbestos. Prior to this change, the exception was located in § 173.216(b) and excepted asbestos immersed or fixed in a natural or artificial binder material and asbestos contained in manufactured products. Before the development of the HM–215E NPRM, we received comments that § 173.216 was not an appropriate location for this exception because it is referenced in the non-bulk column of the HMT, leading readers to believe that the exception applies to non-bulk packagings only. To clarify that this exception applies to both non-bulk and bulk packagings, we are moving the exception from § 173.216(b) to new Special Provision 156.

• New Special Provision 157 is added to the entries ''Vehicle, flammable gas powered,'' and ''Vehicle, flammable liquid powered,'' each of which is assigned to UN3166. The new special provision specifies that the entries include hybrid electric vehicles powered by both internal combustion engines and wet, sodium or lithium batteries. NAAHAC agrees with the adoption of Special Provision 157, and requests that we clarify whether we are addressing all wet batteries. We do intend for the entries ''Vehicle, flammable gas powered'' and ''Vehicle, flammable liquid powered,'' and Special Provision 157 to apply to all wet batteries. While we are not aware of any hybrid vehicles that utilize wet batteries as a source of propulsion power, we included the reference in order to provide flexibility to encompass all wet batteries contained in the vehicle.

• New Special Provision 159 is added to the entry ''5-tert-Butyl-2,4,6-trinitro-m-xylene *or* Musk Xylene,'' UN2956. The special provision requires this material to be protected from direct sunshine and kept in a cool, well-ventilated place away from sources of heat.

• New Special Provision 160 is added to the entry ''Air bag inflators, *or* Air bag modules, *or* Seat-belt pretensioner,'' UN3268, Class 9. The special provision includes the requirement that air bag inflators and modules must be tested in accordance with Test series 6 (c) of Part I of the UN Manual of Tests and Criteria, and also includes an exception from testing air bag modules that contain an inflator that has been previously approved for transportation. We received a comment from NAAHAC supporting adoption of this special provision.

• New Special Provision 161 is added to the entry ''Air bag inflators, *pyrotechnic or* Air bag modules, *pyrotechnic or* Seat-belt pretensioners, *pyrotechnic,*'' UN0503, Division 1.4G. One commenter stated that the addition of this special provision poses an unnecessary burden for international shippers by requiring the use of the proper shipping name, ''Articles, pyrotechnic *for technical purposes,*'' UN0431. Special Provision 161 applies only to domestic shipments. Shipments offered and transported in accordance with the provisions of §§ 171.11 and 171.12 are not subject to this special provision. The special provision specifies that the UN0503 entry may not be used for domestic shipments and that the more appropriate description is ''Articles, pyrotechnic *for technical purposes,*'' UN0431. We believe that describing articles meeting the Class 1.4G criteria as air bags is misleading and may cause confusion for emergency responders. The wording ''or seat belt pretensioners'' was inadvertently omitted from the NPRM's regulatory text and is added in this final rule. Also, see § 172.102, HMT, which includes the amendment to remove the italicized word ''pyrotechnic'' from the UN0503 entry.

• New Special Provision 162 is added to eight new entries and two existing entries. The Special Provision authorizes the material to be transported under the provisions of Division 4.1, only if it is packed so that at no time during transport will the percentage of diluent fall below the percentage that is specified in the proper shipping name. The new entries are ''4-Nitrophenylhydrazine, *with not less than 30% water, by mass,*'' UN3376; ''Sodium dinitro-o-cresolate, wetted, *with not less than 10% water by mass,*'' UN3369; ''Trinitrobenzene, wetted, *with not less than 10% water by mass,*'' UN3367; ''Trinitrobenzoic acid, wetted, with not less than 10% water by mass, UN3368; ''Trinitrochlorobenzene (picryl chloride), wetted, *with not less than 10% water by mass,*'' UN3365; ''Trinitrophenol (picric acid), wetted, with not less than 10% water by mass,'' UN3364; ''Trinitrotoluene (TNT), wetted, *with not less than 10% water by mass,*'' UN3366; and ''Urea nitrate, wetted, *with not less than 10% water by mass,*'' UN3370. The two existing entries are ''Barium azide, wetted *with not less than 50 percent water, by mass,*'' UN1571 and ''Dipicryl sulfide, wetted *with not less than 10 percent water, by mass,*'' UN2852.

• New Special Provisions A54 and A55 are added to address certain requirements for the transportation of lithium batteries by aircraft. Special Provision A54 provides for an approval provision that authorizes lithium batteries and lithium batteries contained in equipment or packed with equipment to exceed the quantity limits as specified in Column (9B) of the HMT when transported by cargo aircraft, if approved by the Associate Administrator. Based on a comment we received from the Portable Rechargeable Battery Association (PRBA) stating that we did not take into account large lithium batteries contained in equipment, we are increasing the quantity in the HMT for lithium batteries contained in equipment from 5 kg to 35 kg for consistency with the maximum quantity per package specified for lithium batteries packed with equipment. Additional comments submitted by PRBA are beyond the scope of this rulemaking. Special Provision A55 provides for an approval provision to authorize prototype batteries to be transported by cargo aircraft, if approved by the Associate Administrator. We are assigning Special Provisions A54 and A55 to the entries ''Lithium battery,'' UN3090, ''Lithium batteries, contained in equipment,'' UN3091 and ''Lithium batteries packed with equipment,'' UN3091.

• New Special Provision A56 is added to address the air transport of radioactive material with subsidiary hazards of Division 4.2, PG I, and Divisions 2.1 or 2.3. Division 4.2, PG I subsidiary hazard materials are authorized for transportation by aircraft in Type B packagings only. Materials with a 2.1 subsidiary hazard are prohibited from transport aboard passenger aircraft. The special provision is in alignment with the ICAO Technical Instruction's Special Provision A78, with regard to radioactive materials with Division 2.1 subsidiary hazard but not the Division 4.2, PG I packaging requirement or the Division 2.3 subsidiary hazard approval provision. New Special Provision A56 includes Division 4.2, PG I because we believe it was inadvertently omitted in ICAO's Special Provision A78, and we understand that steps are being taken to address the matter with the ICAO Dangerous Goods Panel. See the § 172.101 HMT in the regulatory text of this rule for specific entries.

• Special Provision IB3 is revised by excepting ''Ammonia solutions, *relative density between 0.880 and 0.957 at 15 degrees C in water, with more than 10 percent but not more than 35 percent ammonia*,'' UN2672 from the Special Provision's ''Additional Requirement'' that authorizes liquids with a vapor pressure less than or equal to 110 kPa

at 50 °C (1.1 bar at 122 °F), or 130 kPa at 55 °C (1.3 bar at 131 °F). New Special Provision IP8 is also added to the UN2672 entry.

• Special Provision IB52 (Table 2) is revised by adding additional packaging authorizations for certain entries and correcting various typographical errors. The entry ''Dicumyl peroxide,'' UN3110 is corrected by adding ''2000'' as the maximum quantity in liters. In addition, we are moving the approval provision for formulations not covered in Special Provision IB52 to § 173.225(e)(5). Section 173.225(e) currently contains an approval provision for portable tanks, and we believe this paragraph is a more appropriate location for the IB52 approval provision.

• New Special Provision IP8 (Table 3) is added to the existing entry ''Ammonia solutions, *relative density between 0.880 and 0.957 at 15 degrees C in water, with more than 10 percent but not more than 35 percent ammonia,*'' UN2672 (see Special Provision IB3). We received a comment from the Industrial Packaging Alliance of North America supporting this addition. The special provision authorizes ammonia solutions to be transported in rigid or composite plastic intermediate bulk containers (IBCs) (31H1, 31H2 and 31HZ1), if the rigid plastic and composite IBCs have successfully passed, without leakage or permanent deformation, the hydrostatic test specified in § 178.814 at a test pressure that is not less than 1.5 times the vapor pressure of the contents at 55 °C (131 °F).

• New Special Provision N83 is added to the new entry ''Urea nitrate, wetted, *with not less than 10% water by mass,*'' UN3370. This special provision limits the quantity of this material to no more than 11.5 kg (25.4 lbs) per package.

• New Special Provision N84 is added to six new entries and one existing entry. The special provision limits the quantity per package to no more than 500 g (1.1 lbs.). The six new entries are: ''Trinitrophenol (picric acid), wetted, *with not less than 10% water by mass,*'' UN3364; Trinitrochlorobenzene (picryl chloride), wetted, *with not less than 10% water by mass,*'' UN3365; ''Trinitrotoluene (TNT), wetted *with not less than 10% water by mass,*'' UN3366; ''Trinitrobenzene, wetted, *with not less than 10% water by mass,*'' UN3367; ''Trinitrobenzoic acid, wetted, *with not less than 10% water by mass,*'' UN3368; and Sodium Dinitro-o-cresolate, wetted, *with not less than 10% water by mass,*'' UN3369. The existing entry is Dipicryl sulfide, wetted *with not less than 10 percent water, by mass,*'' UN2852.

• New Special Provision N85 is added to two existing entries, ''Isosorbide dinitrate mixture *with not less than 60 percent lactose, mannose, starch or calcium hydrogen phosphate,*'' UN2907 and ''Pentaerythrite tetranitrate mixture, desensitized, solid, n.o.s. *with more than 10 percent but not more than 20 percent PETN, by mass,*'' UN3344. The special provision prohibits the material from being transported in packagings conforming to the requirements of Part 178 of the HMR at the Packing Group I performance level. This action addresses over-confinement hazards associated with these materials by prohibiting the use of packagings meeting the Packing Group I performance criteria.

• Special Provision T23 is revised to correct typographical errors for the entries ''tert-Butyl peroxyacetate, not more than 32% in diluent type B'' and ''tert-Butyl peroxypivalate, not more than 27% in diluent type B.'' The word ''tyupe'' is corrected to read ''type'' and the control temperature, ''–5 °C,'' is corrected to read ''+5 °C.''

• Special Provision TP3 is editorially revised for clarity.

Section 172.202. We are revising paragraphs (a)(2), (a)(5) and (b) as discussed below.

Requirement To Include the Subsidiary Hazard on Shipping Papers

In paragraph (a)(2), we are requiring the subsidiary hazard class(es) or subsidiary division number(s) to be entered in parentheses following the primary hazard class or division number on shipping papers. Prior to this amendment, the requirement only applied to transportation by vessel. As discussed in the NPRM, this amendment responds to four petitions for rulemaking, P–1363, P–1398, P–1402 and P–1418. One petitioner (P–1363) stated that the lack of such a requirement poses problems for motor carriers concerning segregation, separation and placarding requirements and poses a safety hazard. The petitioner pointed out that when the hazardous materials being transported include a subsidiary hazard such as ''dangerous when wet'' or a subsidiary hazard requiring more stringent requirements than the primary hazard, there is no indication of the subsidiary hazards on the shipping papers and no indication of the subsidiary risks on placards. The petitioner stated that when motor vehicles are being loaded at a dock, labels are not enough to alert hazardous materials employees loading the vehicles or emergency responders of the subsidiary risks of materials contained in the vehicle.

Two petitions (P–1398 and P–1402) were specific to Division 4.3 materials. The petitioners requested that we require the shipping paper to contain the words ''dangerous when wet'' following the basic description for hazardous materials classed as Division 4.3 or having a Division 4.3 subsidiary hazard. The petitioners stated that the additional information would aid emergency responders by more clearly identifying the hazard.

We agree with the petitioners and we are adding a requirement to identify all subsidiary risks of a hazardous material on the shipping paper.

We do not agree with the petitioner's (P–1363) suggestion to provide an exception from the revised requirement to include the subsidiary hazard on shipping papers when the subsidiary hazard is identified in the proper shipping name (for example, ''Flammable liquid, toxic, n.o.s.''). This suggested approach is inconsistent with the UN Recommendations and would result in the addition of a domestic exception that would not enhance hazard communication.

Some commenters supported the requirement to indicate the subsidiary hazard in the basic shipping description; however, other commenters asked that we provide a delayed implementation date in order to minimize associated costs resulting from changes that will need to be made to computer generated shipping forms. One commenter estimates that adding subsidiary hazard information to shipping papers will necessitate modifications to 80,000 active data profiles and case-by-case updates to possibly 200,000 additional data profiles. Another commenter suggests that our cost estimates in the NPRM understate the actual costs that shippers will incur, stating that its costs to comply with the shipping paper revisions proposed in the NPRM will total about $3,600,000. Other commenters agree that substantial time and resources, including modifications to systems and training programs, will be required to implement the new requirements. We agree that additional time is necessary and are extending the mandatory compliance date for this change until October 1, 2005 (*See* § 171.14). This date provides industry two years from the effective date of this final rule to implement the requirement and should help to reduce the implementation burden and costs of compliance with the change.

Requirement To Include Number and Types of Packages on Shipping Papers

We are also revising paragraph (a)(6) regarding the indication on shipping papers of the total quantity of hazardous materials. The amendment makes it mandatory for shippers to include on shipping papers the number and types of packages, such as drums, boxes, jerricans, *etc.,* being used to transport hazardous materials by all modes of transportation. In the NPRM, we proposed a one-year implementation period and requested comments specific to this issue, including suggestions to minimize any impacts that would be associated with the change, such as providing an extended transition period. A number of the commenters suggested that because of the costs associated with implementing the changes, such as to computer programs and systems, we should extend the compliance date. Most commenters suggested that a two or three-year implementation period would be sufficient. We agree that this new requirement warrants additional time to implement. To help reduce the implementation burden and associated costs, we are authorizing use of the current requirements until October 1, 2007 (*see* § 171.14). This date will provide companies four years from the effective date of this final rule.

One commenter requested that we justify the requirement to indicate package types and numbers on shipping papers. We believe that the requirement to indicate types and numbers of packages will enhance the safety and security of hazardous materials transportation while enhancing international harmonization. When incidents occur during transportation, it is essential to know the number of packages present in a given shipment. For example, emergency responders at the scene of an incident would use the information to be certain that they have accounted for all of the packages. After a release of hazardous materials from a motor vehicle involved in a highway traffic accident, it is important for the emergency responders to quickly ascertain the number and types of packages when determining their emergency response actions.

From a security perspective, an indication of the number and type of packages facilitates accountability of the packages. With today's heightened risk of terrorism, the requirement to include the number and types of packages on shipping papers is an effective tool in promoting public safety by allowing carriers, transportation workers, emergency responders and law enforcement personnel to quickly determine whether packages may be missing, such as from theft. The requirement will assist law enforcement personnel in identifying questionable shipments where further investigation may be warranted. The requirement will help deter and prevent hazardous materials in transportation from being used in a criminal manner, such as weapons of terrorism.

Finally, for ease of compliance with the appropriate regulations, international carriers engaged in the transportation of hazardous materials by aircraft generally elect to comply with the ICAO Technical Instructions, while vessel operators generally elect to comply with the IMDG Code. Because the ICAO Technical Instructions and the IMDG Code currently require the number and types of packages to be included on shipping papers, shippers complying with these international regulations are presently subject to conformance with this requirement. Consistency between international regulations and the HMR with respect to requiring the number and types of packages to be included on shipping papers is another step towards our goal of international uniformity.

One commenter requested that we allow the newly required indication of package types and numbers information to be entered before or after the basic description. We agree and have adopted this placement in this final rule.

Several commenters asked whether we would allow abbreviations for package type, noting that EPA allows certain abbreviations on the hazardous waste manifest. We agree that abbreviations may be used for package types and have revised paragraph (a)(6) accordingly.

We reformatted paragraph (a)(5) in response to a comment from the Dangerous Goods Advisory Council (DGAC) requesting clarification on the structure of paragraph. For the purpose of consolidation, we also transferred to paragraph (a)(5) the existing additional requirements for transportation by vessel currently located in § 172.203(i)(1), (i)(2), (i)(3) and (i)(6).

Optional Sequence of Information

Paragraph (b) is revised to allow an alternative to the basic description sequence currently required in this paragraph. Under the alternate format, the identification number is listed first, followed by the proper shipping name, the hazard class and subsidiary risk, and packing group number. Several commenters stated that authorizing a new sequence of information will cause confusion, and two commenters requested that a single sequence of information be adopted at the international level. While we believe that the new sequence is necessary for harmonization with international regulations, we are making it optional, rather than requiring it in this final rule. We agree that it would be beneficial to work with the appropriate international bodies to adopt on a single sequence of information.

Structure of 172.202(a)(5)

One commenter requested that 172.202(a)(5) be restructured to clarify the requirements. We agree and have made the necessary changes.

Description of Cylinders on Shipping Papers

One commenter requested that cylinders not be excepted from the requirement to indicate the total quantity on the shipping paper. This comment is outside the scope of this rulemaking as it addresses an existing requirement. Another commenter requested that we clarify § 172.202(a)(5) to indicate that cylinders may be described by a net or gross quantity, in addition to by number of cylinders. The commenter is correct that a net or gross mass may be used to describe cylinders and that this information is not mandatory. As previously discussed, however, we are requiring that the number and types of packages be included on shipping papers. This final rule, therefore, continues to allow the option of indicating the mass of cylinders, but makes mandatory the indication of the number of cylinders in a shipment. One commenter questioned whether airbags containing compressed gas cylinders would be subject to this requirement. We do not consider cylinders employed for use in airbags or other articles to be in the package, so the requirement does not apply in this instance. In the case of airbags and other articles containing cylinders, the package containing the airbag or article is considered to be the package.

Requirement To Indicate Net or Gross Mass

One commenter noted that the removal of the words ''as otherwise appropriate'' implies that shippers can no longer use other more relevant units of radioactivity to account for the quantity of radioactive materials in a consignment. This was not our intent, and we have specifically added text to allow the use of units more appropriate to radioactive material shipments.

Several commenters suggested that we eliminate the words ''net mass'' and ''gross mass'' from the example ''1box, net mass, 30 kg'' or ''2 drums, gross

mass, 200 kg.'' We agree that the example may be misleading and have removed the example from the section.

Several commenters noted that the sentence ''Abbreviations may be used to specify the unit of measurement for the total quantity'' is redundant because it is permitted in 172.202(c). We agree and have removed the sentence.

One commenter requested we retain the current phrase ''* * * of the hazardous material covered by the description * * *'' and not adopt the new phrase ''* * * of each hazardous material bearing a different proper shipping name, UN number or packing group * * *.'' We agree that the existing wording is adequate considering each element of the proposed language is a part of the ''description'' and have retained the current text.

One commenter suggested we use the term ''packages containing only residue'' rather than the term ''empty packagings.'' This comment is outside the scope of this rulemaking.

One commenter requested that we require a gross mass, and not a net mass or volume, due to placarding requirements. Because this was not proposed in the NPRM, the comment is beyond the scope of this final rule.

Section 172.203. We are removing and relocating paragraphs (i)(1), (i)(2), (i)(3) and (i)(6). With adoption of the requirement to indicate types of packagings on shipping papers in § 172.202, we are consolidating the four vessel requirements in § 172.203(i) by moving them to the description requirements in § 172.202(a)(5). The paragraphs address additional shipping paper requirements for the identification of the type, number and gross mass of packagings, and the identification of subsidiary hazards consistent with international standards. The current paragraphs (i)(4) and (i)(5) are redesignated (i)(1) and (i)(2).

Section 172.301. Paragraph (a)(1) is revised to reflect the new alternative marking requirement in § 172.315 for packages containing limited quantities of hazardous materials. Packages containing limited quantities of hazardous materials must be marked with the proper shipping name in accordance with § 172.301, or in accordance with the new alternative marking in § 172.315 that consists of an identification number placed within a diamond. (See § 172.315). Several commenters requested that we allow a shipment to be transported solely via highway and rail when marked and labeled for transport by aircraft. These comments, however, were based on the NPRM text which proposed to incorporate the marking as a mandatory requirement. Because we are adopting the marking as an alternative to the current requirements, a limited quantity package prepared for air transport is also acceptable for transportation solely by highway and rail without adding the marking as specified by § 172.315.

Section 172.312. A new paragraph (c)(6) is added to allow packages containing liquid infectious substances in primary receptacles not exceeding 50 ml (1.7 oz) to be excepted from the requirements in § 172.312(a). Section 172.312(a) requires liquid hazardous materials packaged in non-bulk combination packagings to be packed with closures upward and to be legibly marked with orientation markings.

Section 172.315. A new section, § 172.315, is added as an alternative marking requirement for packagings containing limited quantities of hazardous materials. This section allows limited quantity packagings to be marked with the identification (ID) number placed within a diamond. After considering the comments discussed below, we are incorporating the diamond marking into the HMR as an alternative to, rather than a replacement of, the existing marking requirements for limited quantities. In addition, the UN Committee of Experts on the Transport of Dangerous Goods will be addressing requirements for limited quantities and consumer commodities during their 2003–2004 work program. While we are not aware of any proposals to change the package marking for limited quantities, there is a possibility that changes may be discussed and adopted, and therefore, replacing the existing requirement would be premature at this time.

Not all commenters support adopting the requirement. Several commenters opposed the requirement because the diamond marking is not contained in the ICAO Technical Instructions. One commenter incorrectly stated that the requirement is not contained in any of the international standards, including the IMDG Code, and asked us to explain our purpose for proposing the limited quantity marking. Currently, the diamond marking is contained in Chapter 3.4.5.1.2 of the IMDG Code and in Chapter 3.4 of the UN Recommendations. By incorporating the marking as an alternative requirement, persons have the flexibility to continue using the current limited quantity package marking.

With respect to the ICAO Technical Instructions, we agree with the commenters' argument that incorporating the marking requirement will create unnecessary problems. Several commenters noted that under the current limited quantity requirements, they may mark and label packages containing limited quantities prepared for air transport and also ship them domestically by ground. URS Corporation stated that if we adopted this requirement, packages prepared for air transport displaying a hazard label and marked with the ID number and proper shipping name would need to be additionally marked with the new limited quantity marking when also transported by highway or rail. This would preclude shippers from using a single system of marking and labeling when packages marked and labeled for air transport are also being transported by highway or rail. We agree that applying the new limited quantity marking for packages prepared for air transport would be redundant. The commenters requested that we allow a shipment to be shipped via ground when marked and labeled for air transport, regardless of whether any portion of the transport includes transportation by air. In response to the commenters' request, we are revising the regulatory text in paragraph (a) by adding the words ''Except for transportation by aircraft.''

Some commenters requested an extended transition period, until October 1, 2006, for the continued use of the existing limited quantity requirement. The commenters pointed out that the October 1, 2004 delayed implementation date may not afford industry enough time to clear their stocks of packagings marked in accordance with the current marking requirements. With the adoption of this requirement as an option, the current limited quantity marking is retained and, therefore, an extended transition period is not necessary.

The Florida Department of Environmental Protection, Bureau of Emergency Response (FDEP–BER) believes that all packages should display the proper shipping name in order to determine the contents. FDEP–BER stated that ID numbers are not as easy and quick to identify as proper shipping names. In addition, using the ID number instead of a proper shipping name may require a person to consult reference materials to determine the contents of the packages because certain ID numbers apply to more than one chemical or reference only a generic shipping description that lacks the specific composition of the material. While we recognize the concerns of the commenters, we do not agree that indicating the UN number in lieu of the proper shipping name will compromise safety. We believe the proper shipping name can be quickly determined using

the Emergency Response Guidebook's section containing ID numbers.

One commenter requested a clarification regarding color specification for the limited quantity marking. Consistent with the UN Recommendations and the IMDG Code, we are not restricting the marking to a specific color.

Two commenters requested early voluntary compliance, as of January 1, 2003, with the new limited quantity marking. Because the NPRM did not include this requirement together with the proposed early compliance date for the incorporation-by-reference materials, the request is considered beyond the scope of this final rule. We are, however, authorizing immediate voluntary compliance upon the date of publication of this final rule.

Based on the above discussion, we are adding a new section, § 172.315, as an alternative marking requirement for packages containing limited quantities of hazardous materials. When marked in accordance with this section, limited quantity packages must be marked with the identification (ID) number placed within a square-on-point. Marking the proper shipping name on limited quantity packages is not required when using this marking, but is permissible. The line forming the square-on-point must be at least 2 mm thick and the height of the ID number no less than 6 mm. For packages containing more than one limited quantity of hazardous materials with different ID numbers, the packaging must be marked with either individual diamonds bearing a single ID number, or a single diamond large enough to include each applicable ID number. The marking must be durable, legible and of a size relative to the packaging as to be readily visible.

Section 172.321. A new section, § 172.321, is added to incorporate an air eligibility marking requirement into the HMR for non-bulk packages offered for transportation by aircraft. Section 172.321 replaces the proposed § 172.323 as the location for this requirement because § 172.323 is now the marking section for infectious substances. The marking certifies compliance with all the applicable air transport requirements that apply to a package containing hazardous materials that is offered for transport by air, including pressure differential requirements, package markings and labels, inner packaging limits, selection of appropriate types of packagings, use of closure instructions for inner packagings, use of absorbent materials, application of the cargo aircraft handling label (when applicable), and proper classification of the contents of the packaging.

We received approximately 10 comments addressing the proposed air eligibility mark. Some commenters are in favor of the marking, but request certain revisions, while other commenters are opposed to the adoption of the mark altogether.

Several commenters addressed the distinction between the use of the words ''package'' and ''packaging.'' The ICAO's use of the word ''package'' in the Technical Instructions and our use of the word ''package'' as proposed in the NPRM has led to misunderstandings of the meaning and applicability of the air eligibility mark. One commenter suggested that we postpone adoption of this requirement until ICAO has considered this issue. Another commenter suggested that we submit a variation to ICAO if we adopt the air eligibility mark as proposed. We interpret the current ICAO text that states shipments must ''meet all the applicable requirements for air transport'' to include the packaging plus its contents (the ''package'') and not the packaging alone. On the basis of a proposal to ICAO to revise the Technical Instructions by clarifying that the certification marking applies to the package, the ICAO Dangerous Goods Panel recently agreed to amend the ICAO Technical Instructions to indicate that the air eligibility mark is an indication that the shipper has determined that the ''package'' meets the applicable air transport requirements. Based on the foregoing, the text, as proposed, will be consistent with the ICAO Technical Instructions. Therefore, we believe it is appropriate to adopt this change at this time.

The Air Transport Association (ATA), the Air Line Pilots Association (ALPA) and Delta Airlines stated that the wording ''each person'' in paragraph (a) suggests that any person, including the carrier and the forwarder would be responsible for marking the package with the air eligibility mark. ALPA maintains that it is important for the marking to be applied when the package is being prepared. We agree that the offeror is the appropriate person to assume responsibility for the mark and that the carrier is responsible for ensuring that the mark is present. We are revising paragraph (a) by replacing the wording ''each person who offers for transportation or transports'' with ''each person who offers for transportation.'' This revision also responds to a comment that we received from DGAC in which DGAC cited the Federal hazardous materials transportation law concerning ''Representation'' and questioned the authority to place the air eligibility marking on a package. DGAC stated that, as proposed, requiring the mark to represent total certification of compliance would suggest that the only person who may ''display the marking on a package would be the same person making the certification'' in accordance with § 172.204. DGAC went on to question whether a packaging manufacturer may pre-certify compliance because there is no signature involved in the display of the marking. As discussed in the paragraph above, it is the offeror who is responsible for the certification. The packaging manufacturer is not certifying that the package is in compliance with all applicable requirements. The marking has no significance as a certification until the package is offered for transportation. With respect to the statement suggesting that only a signature can represent certification, the commenter is incorrect. Although the air eligibility mark, as a form of certification, does not waive the shipping paper certification, the air eligibility mark certifies that the package meets all applicable requirements for air transport. This is consistent with existing regulatory text in § 172.316 that states the ORM–D marking is the certification that the material is properly described, classed, packaged, marked and labeled.

Several commenters disagree with allowing the air eligibility mark to be hand drawn. Currently, the HMR does not prohibit any markings from being hand drawn provided all applicable specifications are met. We did not propose a specific graphic for the marking and do not believe it is necessary to single out the air eligibility mark from being hand drawn as long as it clearly depicts an airplane in a circle and says ''Air Eligible.'' However, we may consider proposing a specific graphic for the air eligibility marking in future rulemaking, preferably based on a consensus standard.

Dupont, the Air Transport Association (ATA), ALPA and Delta Airlines disagree with allowing the air eligibility mark to be preprinted on packages. The commenters believe that preprinted packages can inadvertently be used for shipments that are not suitable for air transport. Currently, the HMR authorizes UN markings and other package markings to be preprinted and we view the air eligibility mark as similar. In certain instances it may be more cost effective for the shipper to preprint the mark. It is our position that it is the responsibility of the offeror to ensure that every package bearing the

mark is air eligible, regardless of whether it is preprinted or not.

One commenter incorrectly questions why we except dry ice from the air eligibility mark when the ICAO Technical Instructions do not provide the exception. The ICAO Technical Instructions contain the same exception in the dry ice packing instruction (see ICAO Technical Instruction 904).

One commenter opposing the incorporation of the air eligibility mark is concerned that currently marked shrink-wrapped packages will be required to be remarked. As discussed earlier in this preamble, we are providing an extended transition period, until October 1, 2004, which will allow sufficient time for such packages to be transported as they are currently marked.

One commenter believes there is not enough space for another marking and states that if the package has been tested under UN certification, ''it is fit for air.'' We disagree. The size requirement specifies only that mark be visible. Meeting the UN packaging test requirements is not an assurance that the package is suitable for its contents or that it complies with the applicable air transport requirements.

Several commenters are opposed to the air eligibility marking stating that our interpretation of what the air eligibility mark certifies is too broad or that the mark is unnecessary because the certification statement on the shipping paper is sufficient. We disagree. The air eligibility mark communicates the certification directly on the package. In addition to consistency with the ICAO Technical Instructions, we believe that the use of an air eligibility mark will be beneficial in heightening shipper awareness and responsibility for meeting the additional air transport package requirements. Adoption of this requirement will reduce the inadvertent acceptance for transportation by aircraft of packages that conform only to highway, rail or vessel requirements.

Based on the above discussion, we are incorporating the air eligibility marking requirement into the HMR for all non-bulk packages offered for transportation or transported by aircraft with certain exceptions. The shipper is responsible for the application of the marking, but is not required to physically place it on the package. The marking can be applied by using a durable sticker or label, preprinting it on the packaging, or drawing it on the package by hand. The marking must be durable, legible, and of such size relative to the packaging as to be readily visible. Preprinting by the packaging manufacturer requires the manufacturer and the shipper to closely coordinate to ensure that the package meets the applicable air transport requirements. The shipper is responsible for ensuring that the package meets the applicable air transport requirements.

A number of changes to the proposed text are made in this final rule to clarify the purpose of the marking and requirements. The text of paragraph (a) is revised to more clearly identify the purpose of the mark as certification by the person offering a package that the package meets requirements for air transportation and to provide examples of those requirements. A sentence is added to § 172.321(a) to clarify that the air eligibility mark does not eliminate a requirement for a certification on a shipping paper. Paragraph (b) is reformatted and a sentence is added to clarify that an overpack or outer packaging containing a cylinder must be marked rather than the cylinder. Paragraph (c) is revised editorially and to clarify that packagings which are excepted from marking requirements are not subject to the air eligibility marking. A new paragraph (d) is added to clearly indicate that the air eligibility marking may not be displayed on a package which does not meet requirements for air transportation.

Section 172.411. We are revising the section heading and paragraphs (b) and (d), and adding new paragraphs (e) and (f). In the June 21, 2001 HM–215D final rule, we removed the requirement to differentiate between primary and subsidiary labels by requiring the class number to be displayed on both types of labels. The primary explosive label, but not the explosive subsidiary label, required the appropriate division number and compatibility group to be displayed. This disparity was an oversight, and we are correcting this section by adding the pictorial of the explosive subsidiary label and revising the text accordingly.

Section 172.504. Based on an oral comment we received from a shipper, paragraph (g) is editorially revised to explain the distinction between the words ''explosive articles'' and ''explosive substances.'' The commenter stated that the paragraph is often misinterpreted because the two phrases are not understood as having different meanings.

Part 173

Section 173.2a. In paragraph (b), the second line of the title of the Precedence of Hazard Table is editorially revised to include the word ''division.'' In addition, the Table is revised for the first three entries by inserting ''4.3'' under the Division 4.3 column to indicate that Division 4.3 takes precedence over Class 3 when classifying a material having more than one hazard.

Section 173.21. In paragraph (f)(3)(ii), we are updating the location reference to the control temperature requirements in the IMDG Code to its current location in Chapter 7.7.

Section 173.22. We are revising paragraph (a)(4) to clarify that, in addition to complying with the Part 178 requirements, the shipper is responsible for ensuring that packages comply with the Part 173 requirements. This revision is consistent with the new amendments to § 173.24a relative to closures, and to § 173.27 relative to packages intended for air transport.

Section 173.24. Certain comments that we received are beyond the scope of this rulemaking and will not be addressed in this final rule. In the NPRM we proposed to add a new paragraph (b)(4) and revise paragraph (f)(1). Paragraph (b)(4) proposed general requirements applicable to the integrity of packagings. It also proposed to specify that packagings must be closed in accordance with the closure instructions provided by the manufacturer. Prior to this final rule, § 178.2 required packaging manufacturers to provide closure instructions. Although implied under the requirements of §§ 173.22a(2) and 173.24(d) and (f)(2), there was no specific requirement that shippers follow closure instructions. Also in the NPRM, paragraph (f)(1) proposed to revise requirements for the construction and design of closures.

The National Solid Wastes Management Association (NSWMA) submitted a comment supporting the requirement that packages be closed in accordance with the manufacturer's instructions. The Reusable Industrial Packaging Association (RIPA) also supported the proposal, but requested a revision to permit shippers to close packages in a manner that differs from the closure instructions in § 173.28 provided such procedures are fully documented. RIPA states that the word ''must'' is restrictive for the requirement that packages must be closed in accordance with the manufacturer's instructions and suggests the word be replaced with ''should.'' The commenter further stated that it is impossible for a packaging manufacturer to anticipate every climatic and work condition in which filling may take place and that the manner in which packages are closed often varies from plant to plant. The commenter recommends that closure procedures varying from the

manufacturer's instructions be authorized.

We agree that there may be cases in which certain deviations from the specific closing instructions provided by the manufacturer may be warranted, and note that certain changes are currently permitted under packaging variations in Subpart M of Part 178. We do not agree with revising the word ''must'' to ''should.'' Where the manufacturer has specified closure instructions, those instructions may be critical to performance of the packaging in transportation. We understand the commenter's concerns that a shipper should be able to vary from the closure instructions if an equivalent level of safety is achieved and the procedure is documented. However, to the extent that such changes are not currently permitted and were not proposed in the NPRM, we consider them outside the scope of this rulemaking.

RIPA's concerns highlight the need for collaboration between packaging manufacturer and customer in the design, testing and use of packagings. There is a need for manufacturers of hazardous materials packagings to take into account the various conditions of transport that the packaging may experience. If a packaging has limited capability under specific conditions, then the manufacturer's instructions should indicate these limitations. Effective communication of the packagings' capabilities will serve to avoid the potential for a shipper to inadvertently use a packaging that was not intended for certain transport environments. The closure instructions should provide specifics relative to the packagings' capabilities when specific conditions of transport would impact the packagings' capability to contain hazardous materials.

RIPA commented that several different gasket configurations may need to be used dependent on the filling and transport conditions. If this is the case, and the different gasket configurations were taken into account in the packaging design qualification, the closure instructions should provide appropriate closure information with respect to all of the gasket configurations that were approved according to the design type testing.

Shippers should not be arbitrarily changing closure devices without coordination with the packaging manufacturer or conducting additional testing to verify that the packaging integrity has not been compromised. As specified in Subpart M of Part 178, the substitution of closures or gaskets (for example, changing from a metal bung closure to a plastic bung closure on a closed head steel drum) may change the packaging design type for purposes of UN performance design qualification testing. Closure changes are permitted according to the selective testing variations in accordance with § 178.601(g)(1) and (g)(5). Only when the conditions of the selective testing conditions have been met (including the specified limited additional testing according to § 178.601(g)(5)), if applicable, may a different closure or gasket be used without the packaging being considered a new design requiring the full UN performance testing prescribed in Part 178. The regulatory text we are adopting in this final rule does not negate the ability of the shipper to use different closures consistent with the selective testing provisions.

The instructions provided by the manufacturer should indicate variations to closure procedures that would compensate for environmental conditions or conditions based on the types of materials that are contained in the packaging. To ensure proper closure of packagings and to avoid leaks in transport, shippers and manufacturers need to work in coordination to ensure that the closure methods used will provide an effective seal taking into account the various conditions involved during transport.

Additionally, RIPA commented that (b)(4) and (f)(1) should use consistent wording, and that the text in (f)(1) concerning the requirement for closures to be designed in a manner that make improper closure unlikely should be removed. We do not agree with RIPA's proposed editorial revisions that suggest adding wording such as ''reasonable changes in temperature,'' ''normal altitude variations'' or ''normal vibration ranges.'' We believe this wording is vague and will not enhance the clarity of either paragraph. We agree that the sentence, as proposed in the NPRM, requiring the closure device to be so designed that it is unlikely to be incorrectly or incompletely closed may not be realistic and may be subject to a range of interpretation. We are not, therefore, including the requirement in this final rule.

We believe that the amendments to this section will enhance safety by ensuring that adequate consideration is given to the effects of transportation conditions on packages and that packages are securely and effectively closed.

Section 173.25. In paragraph (a)(2), we are including the air eligibility marking as part of the marking requirements pertaining to overpacks.

Section 173.27. We are revising paragraph (e) and adding a new paragraph (i). Paragraph (e) is revised to require packagings with plastic and metal inner packagings to be packaged using absorbent material when Packing Group I or II liquids of Class 3, 4 or 8 or Division 5.1, 5.2 or 6.1 are offered for transport by passenger or cargo aircraft. Prior to this amendment, the requirement to use absorbent material applied to Packing Group I and II materials when offered for transport by passenger aircraft, and to Packing Group I materials when offered for transport by cargo aircraft. We are applying this requirement to Packing Group II materials offered for transport by cargo aircraft. Existing absorbent material requirements apply when inner packagings are constructed of glass or earthenware. Prior to this final rule, the absorbent material requirement did not apply to Division 5.2 liquids. The amendments are consistent with the 2003–2004 edition of the ICAO Technical Instructions.

We received four comments concerning the absorbent material requirement in paragraph (e). Two commenters suggested that we clarify or remove paragraph (e)(5), which provides an exception from the use of absorbent materials when the inner packagings are not fragile. Paragraph (e)(5) is existing text that was not proposed to be revised in the NPRM. However, we agree that this exception needs to be reconsidered and we have submitted a working paper to the ICAO Dangerous Goods Panel to address it. One commenter, addressing paragraph (e)(2), believes that one absorbent material requirement should apply to transportation by passenger and cargo aircraft. Because these are existing requirements that we did not address in the NPRM, the comment is beyond the scope of this rulemaking.

The Conference on Safe Transportation of Hazardous Articles (COSTHA) stated that the proposed regulatory text is broader than that contained in the ICAO Technical Instructions because it requires absorbent material for all liquid hazardous materials except Class 9. The commenter suggests that we align the paragraph with the wording in the ICAO Technical Instructions by specifically stating that the applicability of the requirement is for liquids in Classes 3, 4, 8 and Divisions 5.1, 5.2 and 6.1. It was not our intent to differ from the requirements of the ICAO Technical Instructions. We agree and are revising the regulatory text accordingly.

We are also adding a new paragraph (i) to refer the reader to new section § 172.321 for the air eligibility marking

requirement for packagings containing hazardous materials being transported by aircraft. See § 172.321 for the discussion on this requirement.

Section 173.62. In § 173.62, in the paragraph (b) Explosives Table, the entry ''UN0503'' is added to the packing instruction P135. This is consistent with international regulations. UN0503 is assigned to the proper shipping name ''Air bag inflators, *or* Air bag modules, *or* Seat-belt pretensioners,'' Division 1.4G (also see § 172.101, HMT). The Class 9 ''Air bag inflators, *or* Air bag modules, *or* Seat-belt pretensioners'' entry continues to be packaged in accordance with § 173.166.

In addition, the obsolete ID number UN0223 is removed from the packing instruction 112(b) in the Explosives Packing Instructions Table. The entry was removed from the § 172.101 Table in a previous rulemaking.

Section 173.115. In paragraphs (d) and (e), we are amending the regulatory text that describes ''non-liquefied compressed gas'' and ''liquefied compressed gas.'' The amendment revises the reference temperature from 20 °C to −50 °C, consistent with internationally accepted definitions for gases and consistent with the twelfth edition of the UN Recommendations.

We are also dividing compressed liquefied gases into high and low pressure categories. The UN Subcommittee revised the terminology for gases to align it with the terminology used in the International Organization for Standardization (ISO) Standard 10286. This standard establishes the terminology applicable to gas cylinders and provides definitions for gases. The new regulatory text affects 11 entries in the § 172.101 Table by removing the word ''compressed'' from the proper shipping names. Under a separate rulemaking, we will address whether the affected gases should be reassigned to more appropriate packagings sections, such as revising the packaging authorization from § 173.302 to § 173.304 in Column (8B) in the § 172.101 Table. We will also address the use of the high- and low-pressure compressed liquefied gas designations.

Sections 173.152, 173.153 and 173.154. The following sections are revised by increasing the inner packaging net capacity limit for Packing Group III liquids from 4 L (1.1 gal) to 5 L (1.3 gal): § 173.152(b)(2), exceptions for Division 5.1 oxidizers and Division 5.2 organic peroxides; § 173.153(b)(1), exceptions for Division 6.1 poisonous materials; and § 173.154(b)(2), exceptions for Class 8 corrosive materials. Section 173.152(b)(4)(ii) is also revised by raising the net capacity of inner packagings containing PG II flammable liquids in polyester resin kits from 1 L (0.3 gal) to 5 L (1.3 gal) each.

Section 173.159. A new sentence is added to paragraph (a) requiring packagings for certain batteries to include an acid/alkali proof liner or a supplementary packaging with sufficient strength and adequate sealant to prevent leakage of electrolyte fluid in the event of spillage. This requirement applies to packagings transported by aircraft and containing electric storage batteries with electrolyte acid or alkaline corrosive battery fluid.

A new paragraph (d)(4) is added to require non-spillable batteries, that are excepted from all other requirements of the HMR, to meet the condition that at a temperature of 55 °C (131 °F), the electrolyte will not flow from a ruptured or cracked case and there is no free, unabsorbed liquid in the battery.

Section 173.161. We are revising this section to specify the packaging requirements for chemical and first aid kits consistent with international standards. We received several comments stating that in paragraph (b), as proposed, the first sentence suggests we are requiring specification packaging for air transport. This was not our intent. The ''except when offered by air'' phrase was intended to apply only to labeling. Therefore, we are revising the first sentence to indicate chemical and first aid kits are excepted from specification packagings for all modes of transportation.

Section 173.166. This section is revised consistent with the removal of the Division 2.2 entry for ''Air bag inflators, compressed gas or Air bag modules, compressed gas or Seat-belt pretensioners, compressed gas,'' UN3353 (see § 172.101, HMT). We are authorizing reclassification to Class 9 without further testing for air bag inflators, air bag modules and pretensioners previously approved for transportation as Division 2.2. We received comments from NAAHAC supporting the adoption of this revision.

Section 173.185. Paragraphs (e)(4) and (e)(7) are revised and a new paragraph (k) is added. We are combining paragraphs (e)(4) and (e)(5) into one paragraph, (e)(4), and removing and reserving paragraph (e)(5).

The revised paragraph (e)(4) allows the use of dividers or other suitable means as alternative methods to inner packagings for effective means of preventing short circuits of lithium cells and batteries.

Based on a comment that was beyond the scope of the HM–215D final rule, we are revising paragraph (e)(7) by applying the prohibition to offer for transportation or transport certain cells and batteries to only those with a liquid cathode containing sulfur dioxide, sulfuryl chloride or thionyl chloride. Prior to this amendment, any cell or battery with a cell that has been discharged to the extent that the open circuit voltage is less than 2 volts, or less than two-thirds of the open circuit voltage of the fully charged cell, whichever is less, is prohibited from being offered for transportation or transported. We are including sulfuryl chloride in this amendment. The UN Recommendations do not include this prohibition. The reduced voltage condition was included in the HMR to address lithium sulfur dioxide, sulfuryl chloride and lithium thionyl chloride primary batteries on the basis of safety issues with low-voltage cells. The lithium sulfur dioxide batteries present hazards in transportation when the sulfur dioxide is depleted. The depletion can cause the removal or breakdown of the passivation film on the lithium anode which could result in a undesirable exothermic reaction of the lithium metal and the electrolyte solvent leading to high temperatures, cell venting, cell rupture, and fires. In addition, a new paragraph (k) is added to allow batteries with a mass of 12 kg or greater and having strong, impact-resistant outer casings to be packed in strong outer packagings, protective enclosures, or unpacked on pallets. Packaging in this mannermay be transported by cargo-only aircraft and is permitted only with the approval of the Associate Administrator.

Additional amendments to the requirements for lithium batteries are being addressed in a separate rulemaking, under Docket HM–224C (NPRM published on April 2, 2002, 67 FR 15510). One of the proposals under Docket HM–224C addresses a reorganization of § 173.185.

Section 173.216. We are moving the exceptions for asbestos in paragraph (b) to a new special provision (see Special Provision 156 in § 172.102). Paragraph (b) excepts asbestos immersed or fixed in a natural or artificial binder material and also excepts asbestos contained in manufactured products. We understand that because the exception is located in § 173.216 and referenced in Column (7) of the HMT for non-bulk packagings, the exception appears to be limited to non-bulk packagings. To clarify the applicability, we are removing and reserving paragraph (b) and transfering the exception to new Special Provision 156. The exception continues to apply to three entries, ''Blue asbestos (Crocidolite) or Brown asbestos (amosite, mysorite),'' UN2212, ''White

asbestos (chrysotile, actinolite, anthohyllite, tremolite),'' UN2590, and ''Asbestos,'' NA2212.

Section 173.218. Paragraph (a) introductory text is revised and paragraph (b) is removed. Paragraph (a) introductory text is editorially revised to reflect the relocation of the requirement previously contained in paragraph (b). In paragraph (b), the requirement for the maximum temperature at which fish meal or fish scrap may not be offered for transportation is revised from 49 °C (120 °F) to 35 °C (95 °F), or 5 °C (41 °F) above ambient temperature, whichever is higher, and relocated to Special Provision 155 (see § 172.102).

Section 173.220. We are adding a new paragraph to include additional requirements for certain engines and vehicles. Existing paragraph (e) is redesignated (f) and the new paragraph becomes paragraph (e). The new paragraph includes several additional requirements for internal combustion engines and vehicles equipped with certain devices when transported by aircraft or vessel. When engines are shipped separately, we are requiring that all fuel, coolant, hydraulic fluids or any other hazardous materials that meet the definition of a hazardous material, must be drained as far as practicable, must have disconnected fluid pipes sealed with leak-proof caps that are positively retained, and for transportation by aircraft, any installed theft-protection devices, radio communications equipment or navigational systems must be disabled.

We received several comments to the proposed new paragraph. UPS supports the revisions and believes the new paragraph will help eliminate confusion when offering or transporting engines. URS Corporation stated that the last sentence requiring certain equipment to be disabled should be omitted because it is not contained in the UN Recommendations. The commenter is correct that the requirement is not contained in the UN Recommendations, however, because it is contained in the ICAO Technical Instructions, we are revising the sentence to apply to air shipments only.

Lynden Incorporated, which represents several tug/barge operators, commented that the terminology ''internal combustion engine'' has become synonymous with the term ''vehicle.'' Lynden Incorporated states that as proposed, paragraph (e) may lead to confusion with respect to which engines must be drained of fluids and must have disconnected fluid pipes sealed with leak-proof caps. Although the words ''shipped separately'' in the proposed text were intended to mean that we are not referring to engines that are installed in a vehicle or machinery, we have decided to further revise the sentence by specifying that the paragraph pertains to engines that are not installed in vehicles or equipment.

Finally, COSTHA requested that paragraphs (a)(2) and (c) be aligned with new Special Provision 157 and the current Special Provision 134 by specifically referencing sodium and lithium batteries. We agree and are making the revisions accordingly.

Section 173.223. We are adding a new packaging section, § 173.223, for musk xylene. Prior to this amendment, the authorized packaging section for musk xylene, § 173.214, required approval by the Associate Administrator. We are adding a new section that is consistent with the UN packing instruction P409 assigned to musk xylene, so that approval by the Associate Administrator is no longer necessary.

Section 173.224. In paragraph (b)(4), the incorrect reference for bulk packaging authorizations, § 173.225(d), is corrected to read § 173.225(e). In the Self-Reactive Materials Table following paragraph (b)(7), five entries in Column (1) are revised and four new entries are added. The five revised entries appear first as ''removes'' and then ''adds'' in the regulatory text section of this rulemaking. For the entry ''2,2′-Azodi(isobutryonitrile) as a water based paste,'' the misaligned column entries are corrected. A new Note 4 is added following the table for assignment to the new entry ''2-Diazo-1Naphthol sulphonic acid ester mixture, Type D.''

Section 173.225. We are amending the paragraph (b) Organic Peroxide Table, the Notes following the Table, and paragraphs ¶ (e)(3)(xii) and (e)(5). The amendments to the Organic Peroxide Table include the addition of bulk and IBC packaging authorizations for certain entries, the addition of several new entries and various corrections to certain entries.

Note 9 following the Table is revised by correcting the paragraph reference ''(e)(3)(ii)'' to read ''(e)(3)(xii).'' A new Note 27 is added for the new entry ''Peroxyacetic acid, distilled, Type F, stabilized,'' UN3110. A new Note 28 is added to clarify that ''Peroxyacetic acid'' and Peracetic acid'' are synonymous.

Paragraph (e)(3)(xii) is revised to clarify that DOT Specification 57 portable tanks are not subject to any other requirements in paragraph (e).

We are also moving the approval provisions contained in the § 172.102(c)(4) Table 2, Special Provision IB52, to paragraph (e)(5). We believe this is a more appropriate section for the approval provisions, which we are expanding to provide for the use of IBCs other than those indicated in the IB52 Table when approved by the Associate Administrator.

Section 173.244. We are revising paragraph (c) by adding a clarification that UN portable tanks are also authorized for use if a T code is specified in Column (7) of the HMT for the specific hazardous material.

Section 173.306. We are revising the paragraph heading in § 173.306(f) by adding the proper shipping name ''Articles, pressurized, pneumatic *or* hydraulic containing *non-flammable gas.*'' The revision is based on the proper shipping name replacing the domestic entry ''Accumulators, pressurized, pneumatic *or* hydraulic (*containing non-flammable gas*),'' which was removed in HM–215D published on June 21, 2001. We received oral comments requesting the addition to the paragraph heading to clarify the intent of the paragraph.

We are also adding a new paragraph (j) to reference the exception for certain compressed gases in § 173.307.

Section 173.307. We are adding a new paragraph (a)(5) to except Division 2.2 gas aerosols with a capacity of not more than 50 ml and with a pressure not exceeding 970 kPa (141 psig) from the HMR.

Section 173.418. Consistent with the addition of Special Provision A56, which requires pyrophoric Class 7 (radioactive) materials to be shipped in Type B packages when transported by aircraft, we are amending § 173.418 to reflect this change.

Section 173.422. We are revising the certification statements in paragraphs (a)(2), (a)(3) and (a)(4) to reflect the updated proper shipping names and UN identification numbers currently authorized in the § 172.101 Table for excepted packages of radioactive materials.

Part 175

Section 175.10. We are adding a new sentence to paragraph (a)(4)(iv) to clarify that the paragraph (a)(4) passenger or crew member personal use exceptions apply to aircraft operators when transporting baggage that has been separated from a passenger or crew member before reaching its final destination, including transfer to another air carrier for delivery. The exceptions were included in the HMR to accommodate the needs of the traveling public to allow passengers and crew members to carry certain quantities and types of articles, such as medicines and toiletries, in checked and carry-on

baggage. The existing regulatory text does not clearly indicate that baggage may be transported when not accompanied by the crew member or passenger, such as when the baggage has been separated from the crew member or passenger due to misroutings, delays, etc. Rather than adding a new paragraph (c) as proposed, we are including this clarifying language at the end of paragraph (a)(4).

We received a comment from Alaska Airlines requesting that this exception be clarified to include scenarios in which the baggage is offered to another carrier by adding the words ''or offering'' to the paragraph. Alaska Airlines suggested replacing the words ''when transporting passenger or crew member baggage'' with ''when transporting or offering passenger baggage.'' Alaska Airlines also requested that we extend the passenger or crew member personal use exceptions to carriers in other modes of transportation to accommodate such instances when the passengers' or crew members' bags are transported to their intended destination by a mode of transportation other than aircraft. We do not agree that the addition of the words ''or offering'' is the most appropriate means of addressing the situation whereby one carrier provides separated checked baggage to another carrier for transport to its intended destination. In this scenario, the carrier that provides the baggage to another carrier is not the offeror. The passenger or crew member is the offeror and is responsible for the contents of the baggage. The passenger or crew member is responsible for ensuring compliance with the HMR when the baggage is offered to the carrier.

We agree with Alaska Airlines that the exceptions should apply when an air operator arranges with another carrier to transport the baggage to its intended destination, including by modes other than air. Although we do not agree that the words ''or offering'' should be added as requested by the commenter, we are including revised regulatory text to clarify that the exceptions also apply when a carrier provides the baggage to another carrier for the purpose of reuniting the baggage with the passenger or crew member who offered it.

We are also revising paragraph (a)(25) to allow two small carbon dioxide cartridges fitted in self-inflating life jackets and two spare cartridges to be carried by a passenger or crew member in checked or carry-on baggage. Prior to this amendment, paragraph (a)(25) allowed, with the approval of the aircraft operator, one small carbon dioxide cylinder fitted into a self-inflating life-jacket, plus one spare cartridge.

Section 175.30. We are adding a new paragraph (a)(5) requiring that the air eligibility marking requirement in § 172.321 must be met before a person may accept hazardous materials for transportation by aircraft.

Section 175.90. We are revising paragraphs (b) and (c). Paragraph (b) is revised to include amendments relative to an aircraft operator's responsibility concerning packagings, baggage or cargo that have become contaminated by leaking hazardous materials. This amendment is consistent with the 2003–2004 edition of the ICAO Technical Instructions and is in response to a National Transportation Safety Board (NTSB) recommendation (A–96–30) issued to the Federal Aviation Administration. The NTSB recommendation resulted from an incident involving an undeclared shipment of a hydrogen peroxide solution that leaked, resulting in injuries to airline personnel and a potential fire hazard aboard a passenger aircraft. Paragraph (c) prohibits a person from placing a damaged packaging aboard an aircraft. We are revising the paragraph by including the words ''baggage or cargo'' when referring to damaged or leaking cargo.

Part 176

Section 176.27. In paragraph (c)(2), we are removing the words ''of 49 CFR 176.27(c)'' at the end of the certification statement and adding the words ''of 49 CFR'' or ''of the IMDG Code.''

Section 176.63. We are adding a new paragraph (f) to include the conditions for the authorized stowage of containers on board hatchless container ships.

Section 176.83. We are adding a new paragraph (l) to include the requirements for the segregation of containers on board hatchless container ships. Paragraph (f) is revised to reflect the addition of the new paragraph.

Section 176.84. In the paragraph (b) Table of Provisions, we are adding nine new provisions (codes) for certain stowage and segregation requirements for hazardous materials that are transported by vessel. The terms ''separated from'' and ''away from'' in the codes are defined in § 176.83 of the HMR.

Code 124 is added to the entry ''Ammonium nitrate emulsion *or* Ammonium nitrate suspension *or* Ammonium nitrate gel, *intermediate for blasting explosives,*'' UN3375 and requires the material to be stowed ''separated from'' bromates.

Code 125 is added to the new entry ''Chlorosilanes, toxic, corrosive, flammable, n.o.s.,'' UN3362 and requires segregation to be the same as for flammable liquids; however, also requires UN3362 to be ''away from'' flammable solids.

Code 126 is added to the five current UN1950 aerosol entries and requires segregation to be the same as for Class 9 miscellaneous hazardous materials.

Code 127 is added to ''5-tert-Butyl-2,4,6-trinitro-m-xy-xylene,'' UN2956 and requires packagings carrying a subsidiary risk of Class 1 (explosives) to be segregated as required for Class 1, Division 1.3.

Code 128 is added to ''Fish meal, stabilized,'' UN2216 and ''Fish meal, unstabilized,'' UN1374 and requires stowage to be in accordance with the IMDG Code, sub-section 7.1.10.3.

Code 129 is added to ''Radioactive material, low specific activity (LSA–I) *non fissile or fissile-excepted,*'' UN2912 (the international entry); ''Radioactive material, low specific activity, n.o.s. *or* Radioactive material, LSA, n.o.s.,'' UN2912 (the domestic entry); ''Radioactive material, low specific activity (LSA–II) *non fissile or fissile-excepted,* ''UN3321; and ''Radioactive material, low specific activity (LSA–III) *non fissile or fissile excepted,*'' UN3322. This code requires stowage to be in accordance with Stowage Category A, with certain exceptions noted.

Code 130 is added to ''Radioactive material, Type A package *non-special form, non fissile or fissile-excepted,*'' UN2915 to require Stowage Category A. Certain exceptions are noted.

Code 131 is added to ''Radioactive material, Type A package, fissile *non-special form,*'' UN3327 to require Stowage Category A, with certain exceptions noted.

Code 132 is added to ''Uranium hexafluoride, fissile (*with more than 1 percent U–235*),'' UN2977; ''Uranium hexafluoride, *fissile excepted or non-fissile,*'' UN2978; ''Radioactive material, uranium hexafluoride, fissile,'' UN2977; and ''Radioactive material, uranium hexafluoride *non fissile or fissile-excepted,*'' UN2978. This code requires stowage to be in accordance with Stowage Category A and notes that any supplementary requirements specified in the transport documents must be considered.

Section 176.140. The reference to the IMDG Code in paragraph (b) is updated by removing the wording ''General Introduction.''

Section 176.170. Paragraph (b) is removed and reserved. For alignment with a revision made in Amendment 31 of the IMDG Code, we are removing the

requirement that prohibits freight containers exceeding 6 m (20 feet) in length from carrying more than 5000 kg (11,023 lbs) net explosive weight of most explosive substances. This provision was removed from the IMDG Code because it placed an inconsistent and unnecessary restriction on containers exceeding 6 m (20 ft) in length, while placing no such restriction on smaller containers. We received a comment from the Sporting Arms and Ammunition Manufacturers' Institute supporting this revision.

Sections 176.410 and 176.415. We are updating these sections for consistency with international standards and with the prior removal of ammonium nitrate fertilizer proper shipping names from the HMR.

Part 178

Section 178.2. Paragraph (c)(1)(ii) is revised by clarifying the information that the packaging manufacturer and each subsequent distributor are required to provide to packaging users. We received several comments concerning this revision. DGAC supports the revision stating that the clarification recognizes the flexibility necessary for effective communication between the manufacturer and packaging user. RIPA supports the general intent of the revision and stated that it is consistent with the UN Model Regulations and should result in ensuring that shippers do a better job of closing packages. RIPA believes that packaging manufacturers and distributors should be required to clearly describe the complete closure system needed for proper closure, including inner packagings, and closure procedures used in passing the applicable performance tests. We agree with this statement and believe that the text, as proposed, adequately addressed these intentions.

RIPA also states we should recognize that shippers often diverge from the manufacturer's instructions to accommodate site-specific conditions, and that ''recommended closure torque values may safely be expressed as minimum values, median values, or a range of values.'' In response to RIPA's comment about allowing shippers to deviate from the closure instructions, our intent, as stated in the NPRM, was to clarify the information that the packaging manufacturer must provide. We did not propose provisions for deviating from closure instructions and considered these recommendations beyond the scope of this rulemaking. For the same reasons, we disagree with RIPA's recommendation to use the phrase ''procedural guidelines for closure recommended by the packaging manufacturer'' instead of ''procedures to be followed.'' RIPA's proposal that we add a new paragraph (c)(1)(ii)(A) to allow the use of torque values is not necessary because current requirements do not preclude ranges of values from being specified in the closure instructions.

RIPA also states that ''the manner in which shippers (*i.e.* fillers) close packagings will often vary from plant to plant'' and provides an example indicating ''that some shippers will tighten drum plugs just prior to shipping to account for possible expansion of the metal or plastic that results from heat exposure that occurs from the time the drum is filled and the time it is placed on a transport vehicle and that other plants have found no need for such a practice.'' Our position is that the manufacturer could easily and realistically include guidance in the closure instructions to indicate, for example, that ''after filling and prior to transport, the shipper should check the tightness of closures to determine if the effects of heating, cooling or gasket relaxation have resulted in the need to tighten the closure.'' While we agree that the shipper has the responsibility for determining the suitability of packagings for the hazardous materials offered for transport, and for ensuring that a package is assembled, closed, or otherwise prepared for transport in compliance with the applicable specifications and requirements for the applicable packaging design type, we believe that the manufacturer needs to provide specific information to allow the shipper to fulfill his responsibilities. The amendments to this section are intended to improve the quality of information provided by manufacturers to shippers in order to enhance safety.

PPG Industries submitted a comment requesting that the last sentence concerning the package being capable of withstanding the pressure differential requirements be removed. PPG Industries indicated that the pressure-differential capability needed by a given packaging is dependent on the material packaged, and that the packaging manufacturer cannot determine full compliance. Single packages for containing liquids are tested and marked with a pressure test rating, which may or may not be suitable for air shipment. It is up to the shipper to determine whether a packaging is suitable for air shipments based on it size, and to determine the appropriate pressure test capability to contain the particular hazardous material packaged. While we agree that the shipper must determine that the package is suitable for the intended hazardous material to be transported, we do not agree that the requirement for the manufacturer to provide guidance to assist the shipper in ensuring that the packaging meets the relevant air transport pressure differential requirement is beyond the capability of the packaging manufacturer. For example, the instruction could indicate that the inner packaging was successfully tested to a pressure differential test at 95 kPa and clearly describe the complete closure system needed for proper closure and the closure procedures used in passing the applicable performance tests. While some hazardous materials may require a different pressure differential, the closure instructions should be sufficient to allow the shipper to determine whether the packaging is suitable for the material, modes of transport and transport conditions. The closure instructions should provide sufficient details relevant to the procedures for closures consistent with the procedure necessary to enable the packaging to meet the pressure differential for which it was tested. Considering this information, the shipper would be able to properly determine whether the package was suitable for the material and for air transport. Based on the foregoing, we are adopting the revised paragraph with editorial changes for clarity.

Section 178.274. Based on oral comment submitted to HM–215D, in paragraph (j)(6) the size of the ''NOT FOR RAIL TRANSPORT'' marking is revised from 20 cm (8 inches) to no less than 10 cm (4 inches) in height. We agree with the commenter's reasoning that 8 inches is excessive for portable tanks in that it could require a decal as long as 14 feet, 3 inches.

Section 178.705. We are correcting the paragraph (c)(1)(iv)(A) wall thickness table for metal IBCs. During the typesetting process of the HM–215D final rule (66 FR 33316), the headings for the IBC types were misaligned, and we are correcting them as presented in the HM–215D NPRM (65 FR 63294) published on October 23, 2000.

Section 178.812. In § 178.812(b)(1), we are adding the words ''with the load being evenly distributed,'' consistent with the wording in § 178.812(b)(2). This text is necessary to clarify that the test must not be conducted with the load unequally applied to an individual lifting device. Although we discussed this revision in the preamble of the NPRM, the word ''evenly'' was inadvertently omitted from the regulatory text.

Part 180

Section 180.350. We are amending § 180.350 by revising the section heading from ''Applicability'' to ''Applicability and definitions'' and by adding definitions for ''Remanufactured IBCs,'' ''Repaired IBCs'' and ''Routine Maintenance of IBCs.''

Section 180.352. Two paragraphs are revised and one new paragraph is added. Paragraph (d)(1)(i) is revised to specify that a repaired IBC must be retested and inspected in accordance with the applicable requirements in this section. Paragraph (f) is revised to require that a record of such tests performed on repaired IBCs must be kept by the IBC owner or lessee. Two commenters, DGAC and COSTHA, noted that with the proposed revision of paragraph (f), a portion of the existing text was omitted from the regulatory text. The unintentionally omitted text, which addresses record retention, is included in this final rule. In addition, as proposed, a new paragraph (d)(1)(iv) is added to specify a requirement for marking repaired IBCs. One commenter requested that we incorporate a provision from the UN Model Regulations to specify that tests performed in conjunction with repairs may be used to satisfy periodic testing requirements. Because the HMR currently does not prohibit tests in conjunction with repairs from being used to satisfy the periodic testing requirements, we do not believe this amendment is necessary. Several commenters asked that we include a marking requirement consistent with the UN Recommendations that applies to the routine maintenance of IBCs. Such a marking was not proposed in the NPRM and inclusion of such a requirement in the HMR is beyond the scope of this final rule.

Section 180.605. Paragraph (k) is revised to restore the inadvertently omitted inspection and test marking requirements for Specification DOT 51, 56, 57 and 60 portable tanks. The text, which was previously located in § 173.32, was omitted during the process of consolidating certain requirements and moving them to part 180 in the final rule, HM–215D. For the height of the marking when displayed on the portable tank, we are also revising the ''0.5 inches'' conversion for 12 mm to ''0.47'' inches consistent with § 178.3.

IV. Rulemaking Analyses and Notices

A. Executive Order 12866 and DOT Regulatory Policies and Procedures

This final rule is not considered a significant regulatory action under section 3(f) of Executive Order 12866. However, this final rule was informally reviewed by the Office of Management and Budget. This final rule is not considered a significant rule under the Regulatory Policies and Procedures of the Department of Transportation [44 FR 11034]. Benefits resulting from the adoption of the amendments in this final rule include enhanced transportation safety resulting from the consistent domestic and international hazard communications requirements, and continued access to foreign markets by domestic shippers of hazardous materials. This rulemaking applies to offerors and carriers of hazardous materials, such as chemical manufacturers, chemical users and suppliers, packaging manufacturers, distributors, battery manufacturers, and radiopharmaceutical companies.

The majority of amendments in this final rule should result in cost savings and ease the regulatory compliance burden for shippers engaged in domestic and international commerce, including trans-border shipments within North America. For example, cost savings will be realized by shippers and carriers as a result of the following:

- Eliminating the differences between proper shipping names, UN number assignments and hazard classification, including subsidiary hazards, between the HMR and international regulations. As a result of these changes, shippers and carriers would not have to re-mark or repackage hazardous materials that are offered in both domestic and international transportation.
- Providing certain exceptions including a placarding exception for sulfur and molten sulfur when the UN number is displayed on bulk packagings, and providing a packaging exception for large, hard-cased robust lithium batteries.

We are authorizing a delayed effective date and a one-year transition period to allow for training of employees and to ease any burden on entities affected by the amendments.

In addition, we recognize that there may be costs associated with two of the shipping paper amendments and we are providing extended compliance dates to minimize any costs associated with those amendments. We are authorizing an extended compliance date, until October 1, 2007, for the amendment requiring the types and numbers of packaging(s) (§ 172.202(a)(5)) to be entered on shipping papers. We are authorizing, until October 1, 2005, an extended transition period for the amendments requiring the subsidiary hazard class or division number to be entered on shipping papers (§ 172.202(a)(2)). We are also providing an extended compliance date of October 1, 2007, for package, marking and shipping paper requirements requiring replacement of the word ''inhibited'' with the word ''stabilized,'' and until October 1, 2005 for the proper shipping names affected by the removal of the word ''compressed.''

Many companies involved in domestic, as well as international operations, will realize economic benefits as a result of the adoption of amendments in this rulemaking. If the changes are not adopted, U.S. companies will be at an economic disadvantage by being forced to comply with a dual system of regulations. The total net increase in costs to businesses in implementing this rulemaking is considered to be minimal and a regulatory evaluation is available for review in the Docket.

B. Executive Order 13132

This final rule has been analyzed in accordance with the principles and criteria contained in Executive Order 13132 (''Federalism''). This rulemaking preempts State, local and Indian tribe requirements but does not propose any regulation that has substantial direct effects on the States, the relationship between the national government and the States, or the distribution of power and responsibilities among the various levels of government. Therefore, the consultation and funding requirements of Executive Order 13132 do not apply.

The Federal hazardous material transportation law, 49 U.S.C. 5101–5127, contains an express preemption provision (49 U.S.C. 5125(b)) that preempts State, local, and Indian tribe requirements on certain covered subjects. Covered subjects are:

(1) The designation, description, and classification of hazardous materials;

(2) The packing, repacking, handling, labeling, marking, and placarding of hazardous materials;

(3) The preparation, execution, and use of shipping documents related to hazardous materials and requirements related to the number, contents, and placement of those documents;

(4) The written notification, recording, and reporting of the unintentional release in transportation of hazardous; or

(5) The design, manufacture, fabrication, marking, maintenance, recondition, repair, or testing of a packaging or container represented, marked, certified, or sold as qualified for use in transporting hazardous material.

This final rule addresses covered subject items (1), (2), (3), and (5) above

and would preempt State, local, and Indian tribe requirements not meeting the ''substantively the same'' standard. This final rule is necessary to incorporate changes adopted in international standards, effective January 1, 2003. If the changes in this final rule were not adopted in the HMR, U.S. companies, including numerous small entities competing in foreign markets, would be at an economic disadvantage. These companies would be forced to comply with two systems of regulations. The changes in this rulemaking are intended to avoid this result. Federal hazardous materials transportation law provides at section 5125(b)(2) that, if DOT issues a regulation concerning any of the covered subjects, DOT must determine and publish in the **Federal Register** the effective date of Federal preemption. The effective date may not be earlier than the 90th day following the date of issuance of this final rule and not later than two years after the date of issuance. The effective date of Federal preemption is October 29, 2003.

C. Executive Order 13175

This final rule was analyzed in accordance with the principles and criteria contained in Executive Order 13175 (''Consultation and Coordination with Indian Tribal Governments''). Because this final rule does not have tribal implications, does not impose substantial direct compliance costs, and is required by statute, the funding and consultation requirements of Executive Order 13175 do not apply.

D. Regulatory Flexibility Act

The Regulatory Flexibility Act (5 U.S.C. 601 *et seq.*) requires an agency to review regulations to assess their impact on small entities, unless the agency determines that a rule is not expected to have a significant impact on a substantial number of small entities. This final rule would serve to facilitate the transportation of hazardous materials in international commerce by providing consistency with international standards. This final rule applies to offerors and carriers of hazardous materials, some of whom are small entities, such as chemical users and suppliers, packaging manufacturers, distributors, and battery manufacturers. As discussed above, under *Executive Order 12866,* the majority of amendments in this final rule should result in cost savings and ease the regulatory compliance burden for shippers engaged in domestic and international commerce, including trans-border shipments within North America.

Many companies will realize economic benefits as a result of the amendments. If the changes in this final rule were not adopted, U.S. companies, including small entities competing in foreign markets, will be forced to comply with two systems of regulations to their economic disadvantage. Therefore, I certify that these amendments will not, if promulgated, have a significant economic impact on a substantial number of small entities.

This final rule has been developed in accordance with Executive Order 13272 (''Proper Consideration of Small Entities in Agency Rulemaking'') and DOT's procedures and policies to promote compliance with the Regulatory Flexibility Act to ensure that potential impacts of draft rules on small entities are properly considered.

E. Paperwork Reduction Act

Information collection and recordkeeping requirements contained in this final rule were submitted to the Office of Management and Budget (OMB) for approval under the provisions of the Paperwork Reduction Act of 1995, Section 1320.8(d). Title 5, Code of Federal Regulations requires us to provide interested members of the public and affected agencies an opportunity to comment on information collection and recordkeeping requests. Under the Paperwork Reduction Act, no person is required to an information collection unless it has been approved by OMB and displays a valid OMB control number.

The new information collection requirements in this rule requiring additional shipping paper documentation, was submitted to OMB for review and approval on June 24, 2003. OMB approved this new information collection under OMB No. 2137–0613, ''Subsidiary Hazard Class and Number/Type of Packagings'' on June 25, 2003 until June 30, 2006. This new information collection, OMB Control Number 2137–0613, requiring the subsidiary hazard class or division number and number and type of packagings to be included on shipping papers increased the information collection burden. RSPA currently has an approved information collection under OMB Control Number 2137–0557, ''Approvals for Hazardous Materials'' with 18,405 burden hours and $415,237.40. There were minor editorial revisions for section designations with no change in the burden for OMB Control Number 2137–0557 under this rule. OMB approved this information collection request under OMB No. 2137–0557, ''Approvals for Hazardous Materials'' as proposed under this rule on December 20, 2002, until December 31, 2005.

OMB approved this information collection request under OMB No. 2137–0613, ''Subsidiary Hazard Class and Number/Type of Packagings'' as adopted under this rule on June 25, 2003, until June 30, 2006. We estimated total information collection and recordkeeping burden resulting from additional information required on shipping papers under the following new information collection to be:

''Subsidiary Hazard Class & Number/Type of Packagings''

OMB No. 2137–0613.
Total Annual Number of Respondents: 250,000.
Total Annual Responses: 6,337,500.
Total Annual Burden Hours: 17,604.
Total Annual Burden Cost: $216,705.
Total First Year Start Up Burden Hours: 45,705.
Total First Year Annual Start Up Cost: $1,115,992.

OMB approved the editorial changes under this rule with no increase in burden for OMB No. 2137–0557, ''Approvals for Hazardous Materials.'' The total information collection and recordkeeping burden is estimated as follows:

''Approvals for Hazardous Materials''

OMB Number: 2137–0557.
Total Annual Number of Respondents: 3,523.
Total Annual Responses: 3,874.8.
Total Annual Burden Hours: 18,405.
Total Annual Burden Cost: $415,237.40.

Requests for a copy of this information collection should be directed to Deborah Boothe or T. Glenn Foster, Office of Hazardous Materials Standards (DHM–10), Research and Special Programs Administration, Room 8422, 400 Seventh Street, SW., Washington, DC 20590–0001, Telephone (202) 366–8553.

F. Regulation Identifier Number (RIN)

A regulation identifier number (RIN) is assigned to each regulatory action listed in the Unified Agenda of Federal Regulations. The Regulatory Information Service Center publishes the Unified Agenda in April and October of each year. The RIN contained in the heading of this document can be used to cross-reference this action with the Unified Agenda.

G. Unfunded Mandates Reform Act

This final rule does not impose unfunded mandates under the Unfunded Mandates Reform Act of 1995. It does not result in costs of $100

million or more to either State, local or tribal governments, in the aggregate, or to the private sector, and is the least burdensome alternative that achieves the objective of the rule.

H. Environmental Assessment

The National Environmental Policy Act of 1969 (NEPA) requires Federal agencies to consider the consequences of major Federal actions and prepare a detailed statement on actions significantly affecting the quality of the human environment. We developed an assessment to determine the effects of these revisions on the environment and whether a more comprehensive environmental impact statement may be required. Our findings conclude that there are no significant environmental impacts associated with this rule. Consistency in the regulations for the transportation of hazardous materials aids in the shipper's understanding of what is required and permits shippers to more easily comply with safety regulations and avoid the potential for environmental damage or contamination. An environmental assessment is available in the public docket.

List of Subjects

49 CFR Part 171

Exports, Hazardous materials transportation, Hazardous waste, Imports, Incorporation by reference, Reporting and recordkeeping requirements.

49 CFR Part 172

Education, Hazardous materials transportation, Hazardous waste, Labeling, Markings, Packaging and containers, Reporting and recordkeeping requirements.

49 CFR Part 173

Hazardous materials transportation, Packaging and containers, Radioactive materials, Reporting and recordkeeping requirements, Uranium.

49 CFR Part 175

Air carriers, Hazardous materials transportation, Radioactive materials, Reporting and recordkeeping requirements.

49 CFR Part 176

Hazardous materials transportation, Maritime carriers, Radioactive materials, Reporting and recordkeeping requirements.

49 CFR Part 178

Hazardous materials transportation, Motor vehicle safety, Packaging and containers, Reporting and recordkeeping requirements.

49 CFR Part 180

Hazardous materials transportation, Motor carriers, Motor vehicle safety, Packaging and containers, Railroad safety, Reporting and recordkeeping requirements.

■ In consideration of the foregoing, 49 CFR Chapter I is amended as follows:

PART 171—GENERAL INFORMATION, REGULATIONS, AND DEFINITIONS

■ 1. The authority citation for part 171 continues to read as follows:

Authority: 49 U.S.C. 5101–5127; 49 CFR 1.53.

■ 2. In § 171.6, in paragraph (b)(2), the Table is amended by adding a new entry in numerical order to read as follows:

§ 171.6 Control numbers under the Paperwork Reduction Act.

* * * * *

(b) * * *

(2) * * *

Current OMB control No.	Title	Title 49 CFR part or section where identified and described
*	*	*
2137–0613	Subsidiary Hazard Class and Number/Type of Packagings	§§ 172.202, 172.203

■ 3. In § 171.7, in the paragraph (a)(3) table, under the entry ''International Maritime Organization'', a new entry is added in alphabetical order to read as follows:

§ 171.7 Reference material.

(a) * * *

(3) *Table of material incorporated by reference.* * * *

Source and name of material	49 CFR reference
*	*
International Maritime Organization,	
*	*
International Convention for the Safety of Life at Sea, (SOLAS) Amendments 2000, Chapter II–2/Regulation 19, 2001.	176.63
*	*

* * * * *

■ 4. In § 171.8, in the definition ''Large packaging'', in paragraph (5), the wording ''UN Recommendations'' is removed and ''UN Recommendations, Chapter 6.6 (incorporated by reference; see § 171.7)'' is added in its place.

■ 5. In § 171.11, paragraphs (c), (d)(5) and (d)(17) are revised to read as follows:

§ 171.11 Use of ICAO Technical Instructions.

* * * * *

(c) Is not a forbidden material or package according to § 173.21 of this subchapter; is not a forbidden material as designated in Column (3) of the § 172.101 Table of this subchapter; and is not forbidden by Column 9(A) of the § 172.101 Table of this subchapter when transported on passenger aircraft, or is not forbidden by Column 9(B) of the § 172.101 Table of this subchapter when transported by cargo aircraft.

(d) * * *

(5) For air bag inflators, air bag modules, or seat-belt pretensioners, the shipping paper description must

conform to the requirements of § 173.166(c) of this subchapter.

* * * * *

(17) A self-reactive substance that is not identified by technical name in the Self-reactive Materials Table in § 173.224(b) of this subchapter must be approved by the Associate Administrator in accordance with the requirements of § 173.124(a)(2)(iii) of this subchapter. An organic peroxide that is not identified by a technical name in the Organic Peroxide Table in § 173.225(b) of this subchapter must be approved by the Associate Administrator in accordance with the requirements of § 173.128(d) of this subchapter.

■ 6. In § 171.12, paragraphs (b)(3), (b)(19) and (b)(20) are revised to read as follows:

§ 171.12 Import and export shipments.

* * * * *

(b) * * *

(3) A material that is designated as a hazardous material under this subchapter, but is not subject to the requirements of the IMDG Code (see § 171.12 of this subchapter) may not be transported under the provisions of this section and is subject to the requirements of this subchapter. Examples of such materials include flammable gas powered vehicles and combustible liquids.

* * * * *

(19) For air bag inflators, air bag modules, or seat-belt pretensioners, the shipping paper description must conform to the requirements of § 173.166(c) of this subchapter.

(20) A self-reactive substance that is not identified by technical name in the Self-reactive Materials Table in § 173.224(b) of this subchapter must be approved by the Associate Administrator in accordance with the requirements of § 173.124(a)(2)(iii) of this subchapter. An organic peroxide that is not identified by a technical name in the Organic Peroxide Table in § 173.225(b) of this subchapter must be approved by the Associate Administrator in accordance with the requirements of § 173.128(d) of this subchapter.

* * * * *

■ 7. In § 171.12a, paragraph (b)(18) is revised to read as follows:

§ 171.12a Canadian shipments and packagings.

* * * * *

(b) * * *

(18) A self-reactive substance that is not identified by a technical name in the Self-reactive Materials Table in § 173.224(b) of this subchapter must be approved by the Associate Administrator in accordance with the requirements of § 173.124(a)(2)(iii) of this subchapter. An organic peroxide that is not identified by a technical name in the Organic Peroxide Table in § 173.225(b) of this subchapter must be approved by the Associate Administrator in accordance with the requirements of § 173.128(d) of this subchapter.

* * * * *

■ 8. In § 171.14, paragraphs (d) introductory text, (d)(1), (d)(2) introductory text, (d)(4) and (d)(5) are revised, and paragraphs (d)(6), (d)(7) and (d)(8) are added to read as follows:

§ 171.14 Transitional provisions for implementing certain requirements.

* * * * *

(d) A final rule published in the **Federal Register** on July 31, 2003, effective October 1, 2003, resulted in revisions to this subchapter. During the transition period, until October 1, 2004, as provided in paragraph (d)(1) of this section, a person may elect to comply with either the applicable requirements of this subchapter in effect on September 30, 2003, or the requirements published in the July 31, 2003 final rule.

(1) *Transition dates.* The effective date of the final rule published on July 31, 2003 is October 1, 2003. Delayed compliance is authorized until October 1, 2004. Unless otherwise specified, on and after October 1, 2004, all applicable regulatory requirements adopted in the final rule in effect on October 1, 2003 must be met.

(2) *Intermixing old and new requirements.* Marking, labeling, placarding, and shipping paper descriptions must conform to either the old requirements of this subchapter in effect on September 30, 2003, or the new requirements of this subchapter in this final rule without intermixing communication elements, except that intermixing is permitted during the applicable transition period for packaging, hazard communication, and handling provisions, as follows:

* * * * *

(4) Until January 1, 2010, a hazardous material may be transported in an IM, IMO, or DOT Specification 51 portable tank in accordance with the T Codes (Special Provisions) assigned to a hazardous material in Column (7) of the § 172.101 Table in effect on September 30, 2001.

(5) Proper shipping names that included the word ''inhibited'' prior to the June 21, 2001 final rule in effect on October 1, 2001 are authorized on packagings and shipping papers in place of the word ''stabilized'' until October 1, 2007. Proper shipping names that included the word ''compressed'' prior to the final rule published on July 31, 2003 and effective on October 1, 2003 may continue to be shown on packagings and shipping papers until October 1, 2007.

(6) The shipping paper requirement for total quantity indication in § 172.202(a)(6), that was in effect on September 30, 2003, is authorized until October 1, 2007.

(7) Except for transport by vessel, the non-mandatory shipping paper provision to include the subsidiary hazard class or division number in accordance with § 172.202(a)(2), in effect on September 30, 2003, is authorized until October 1, 2005.

(8) Until October 1, 2005, proper shipping names that did not identify specific isomers by numbers or letters preceding the chemical name prior to the final rule published on July 31, 2003 and effective on October 1, 2003, may continue to be marked on packagings and are authorized on shipping papers in place of the proper shipping names revised in the July 31, 2003 final rule.

* * * * *

PART 172—HAZARDOUS MATERIALS TABLE, SPECIAL PROVISIONS, HAZARDOUS MATERIALS COMMUNICATIONS, EMERGENCY RESPONSE INFORMATION, AND TRAINING REQUIREMENTS

■ 9. The authority citation for part 172 continues to read as follows:

Authority: 49 U.S.C. 5101–5127; 49 CFR 1.53.

■ 10. In § 172.101, the following amendments are made:

■ a. paragraph (c)(15) is revised;

■ b. in the Hazardous Materials Table, entries are removed, as set forth below;

■ c. in the Hazardous Materials Table, entries are added, as set forth below; and

■ d. in the Hazardous Materials Table, entries are revised, as set forth below:

§ 172.101 Purpose and use of hazardous materials table.

* * * * *

(c) * * *

(15) Unless a hydrate is specifically listed in the Table, a proper shipping name for the equivalent anhydrous substance may be used, if the hydrate meets the same hazard class or division, subsidiary risk(s) and packing group.

* * * * *

§ 172.101.—HAZARDOUS MATERIALS TABLE

Symbols	Hazardous materials descriptions and proper shipping names	Hazard class or division	Identification numbers	PG	Label codes	Special provisions	(8) Packaging (§ 173.***)			(9) Quantity limitations		(10) Vessel stowage	
							Exceptions	Nonbulk	Bulk	Passenger aircraft/rail	Cargo aircraft only	Location	Other
(1)	(2)	(3)	(4)	(5)	(6)	(7)	(8A)	(8B)	(8C)	(9A)	(9B)	(10A)	(10B)
	Remove:												
	*	*		*		*	*		*		*		
	Air bag inflators, compressed gas *or* Air bag modules, combressed gas *or* Seat-belt pretensioners, compressed gas.	2.2	UN3353		2.2	133	166	166	166	75 kg	150 kg	A	
	Air bag inflators, *pyrotechnic or* Air bag modules, *pyrotechnic or* Seat-belt pretensioner, *pyrotechnic*.	1.4G	UN0503	II	1.4G		166	166	166	Forbidden	75 kg	02	24E
	Air bag inflators, *pyrotechnic or* Air bag modules, *pyrotechnic or* Seat-belt pretensioner, *pyrotechnic*.	9	UN3268	III	9		166	166	166	25 kg	100 kg	A	
D	Ammonium nitrate fertilizers	5.1	NA2072	III	5.1	7, IB8	152	213	240	25 kg	100 kg	B	48, 59, 60, 117
	Ammonium nitrate fertilizers; *uniform non-segregating mixtures of ammonium nitrate with added matter which is inorganic and chemically inert towards ammonium nitrate, with not less than 90 percent ammonium nitrate and not more than 0.2 percent combustible material (including organic material calculated as carbon), or with more than 70 percent but less than 90 percent ammonium nitrate and not more than 0.4 percent total combustible material*.	5.1	UN2067	III	5.1	52, IB8, IP3	152	213	240	25 kg	100 kg	B	48, 59, 60, 117
A W	Ammonium nitrate fertilizers: *uniform non-segregating mixtures of nitrogen/phosphate or nitrogen/postash types or complete fertilizers of nitrogen/phosphate/postash type, with not more than 70 percent ammonium nitrate and not more than 0.4 percent total added combustible material or with not more than 45 percent ammonium nitrate with unrestricted combustible material*.	9	UN2071	III	9	132,IB8	155	213	240	200 kg	200 kg	A	
	Ammonium nitrate mixed fertilizers	5.1	NA2069	III	5.1	10, IB8	152	213	240	25 kg	100 kg	B	48, 59, 60, 117
	Ammonium nitrate, *with not more than 0.2 percent of combustible substances, including any organic substance calculated as carbon, to the exclusion of any other added substance*.	5.1	UN1942	III	5.1	A1, A29, IB8, IP3.	152	213	240	25 kg	100 kg	A	48, 59, 60, 116

	Boron trifluoride, compressed	2.3	UN1008		2.3	2, B9, B14	None	302	314, 315.	Forbidden	Forbidden	D	40
	Calcium hypochlorite, hydrated *or* Calcium hypochlorite, hydrated mixtures, *with not less than 5.5 percent but not more than 10 percent water*.	5.1	UN2880	II	5.1	IB8, IP2, IP4, W9.	152	212	240	5 kg	25 kg	D	4, 5, 25, 48, 56, 58, 69
	Carbonyl fluoride, compressed	2.3	UN2417		2.3, 8	2	None	302	None	Forbidden	Forbidden	D	40
+	Chlorodinitrobenzenes	6.1	UN1577	II	6.1	IB8, IP2, IP4, T7, TP2.	None	212	242	25 kg	100 kg	A	91
	Cigar and cigarette lighters, charged with fuel, see Lighters for cigars, cigarettes, *etc*												
	Cresols	6.1	UN2076	II	6.1, 8	IB8, IP2, IP4, T7, TP2.	None	202	243	1 L	30 L	B	
	Diborane, compressed	2.3	UN1911		2.3, 2.1.	1	None	302	None	Forbidden	Forbidden	D	40, 57
	Diethylamino-propylamine	3	UN2684	III	3, 8	B1, IB3, T4, TP1.	150	203	242	5 L	60 L	A	
	Dimethylcyclo-hexylamine	8	UN2264	II	8, 3	B2, IB2, T7, TP2.	154	202	243	1 L	30 L	A	40
	Ethyl methacrylate	3	UN2277	II	3	IB2, T4, TP1	150	202	242	5 L	60 L	B	
	Ethylbutyl acetate	3	UN1177	III	3	B1, IB3, T2, TP1.	150	203	242	60 L	220 L	A	
	Ethylene, compressed	2.1	UN1962		2.1		306	304	302	Forbidden	150 kg	E	40
	Hexafluoroethane, compressed *or* Refrigerant gas R 116.	2.2	UN2193		2.2		306	304	314, 315..	75 kg	150 kg	A	
	Hydrazine, anhydrous *or* Hydrazine aqueous solutions *with more than 64 percent hydrazine, by mass*.	8	UN2029	I	8, 3, 6.1..	A3, A6, A7, A10, B7, B16, B53.	None	201	243	Forbidden	2.5 L	D	21, 40, 42, 100
	Hydrazine hydrate *or* Hydrazine aqueous solutions, *with not less than 37 percent but not more than 64 percent hydrazine, by mass*.	8	UN2030	II	8, 6.1	B16, B53, IB2, T7, TP2, TP13.	None	202	243	Forbidden	30 L	D	40, 42, 82
	Lighters *or* Lighter refills *cigarettes, containing flammable gas*.	2.1	UN1057		2.1	N10	None	21, 308	None	1 kg	15 kg	B	40
	Lithium hydroxide, monohydrate *or* Lithium hydroxide, solid.	8	UN2680	II	8	IB8, IP2, IP4	154	212	240	15 kg	50 kg	A	
	Nitrogen trifluoride, compressed	2.2	UN2451		2.2, 5.1		None	302	None	75 kg	150 kg	D	40
	Phosphoric acid, *liquid or solid*	8	UN1805	III	8	A7, IB3, IP3, N34, T4, TP1.	154	203	241	5 L	60 L	A	
	Phosphorus pentafluoride, compressed.	2.3	UN2198		2.3, 8	2, B9, B14	None	302, 304..	314, 315..	Forbidden	Forbidden	D	40
	Propyl chloride	3	UN1278	II	3	IB2, IP8, N34, T7, TP2.	None	202	242	Forbidden	60 L	E	
	Refrigerating machines, *containing non-flammable, non-toxic, liquefied gas or ammonia solution (UN2672)*.	2.2	UN2857		2.2	A53	306, 307..	306	306, 307..	450 kg	450 kg	A	
	Silane, compressed	2.1	UN2203		2.1		None	302	None	Forbidden	Forbidden	E	40, 57, 104
	Silicon tetrafluoride, compressed	2.3	UN1859		2.3, 8	2	None	302	None	Forbidden	Forbidden	D	40
	Tetrachloroethane	6.1	UN1702	II	6.1	IB2, N36, T7, TP2.	None	202	243	5 L	60 L	A	40
	Tetrafluoromethane, compressed *or* Refrigerant gas R 14.	2.2	UN1982		2.2		None	302	None	75 kg	150 kg	A	
D	Uranium nitrate hexahydrate solution	7	UN2980		7, 8		421, 427.	415, 416, 417.	415, 416, 417.			D	95
	Xenon, compressed	2.2	UN2036		2.2		306	302	None	75 kg	150 kg	A	
	Xylidines, solution	6.1	UN1711	II	6.1	IB2, T7, TP2	None	202	243	5 L	60 L	A	

§ 172.101.—HAZARDOUS MATERIALS TABLE—Continued

Symbols	Hazardous materials descriptions and proper shipping names	Hazard class or division	Identification numbers	PG	Label codes	Special provisions	(8) Packaging (§ 173.***)			(9) Quantity limitations		(10) Vessel stowage	
							Exceptions	Nonbulk	Bulk	Passenger aircraft/rail	Cargo aircraft only	Location	Other
(1)	(2)	(3)	(4)	(5)	(6)	(7)	(8A)	(8B)	(8C)	(9A)	(9B)	(10A)	(10B)
	Add: *Accumulators, pressurized, pneumatic or hydraulic (containing non-flammable gas) see* Articles pressurized, pneumatic *or* hydraulic (*containing non-flammable gas)*												
	*	*		*		*	*		*		*		
I	Air bag inflators, *or* Air bag modules, *or* Seat-belt pretensioners.	1.4G	UN0503	II	1.4G	161	None	62	None	Forbidden	75kg	02	
	Air bag inflators, *or* Air bag modules, *or* Seat-belt pretensioners.	9	UN3268	III	9	160	166	166	166	25 kg	100	A	
	*	*		*		*	*		*		*		
	Ammonium nitrate emulsion *or* Ammonium nitrate suspension *or* Ammonium nitrate gel, *intermediate for blasting explosives*.	5.1	UN3375	II	5.1	52, 147	None	214	214	Forbidden	Forbidden	D	48, 59, 60, 124
	*	*		*		*	*		*		*		
	Ammonium nitrate based fertilizer	5.1	UN2067	III	5.1	52, 150, IB8, IP3.	152	213	240	25 kg	100 kg	B	48, 59, 60, 117
AW	Ammonium nitrate based fertilizer	9	UN2071	III	9	132, IB8	155	213	240	200 kg	200 kg	A	
	*	*		*		*	*		*		*		
	Ammonium nitrate, *with not more than 0.2% total combustible material, including any organic substance, calculated as carbon to the exclusion of any other added substance*.	5.1	UN1942	III	5.1	A1, A29, IB8, IP3.	152	213	240	25 kg	100 kg	A	48, 59, 60, 116
	*	*		*		*	*		*		*		
	Boron trifluoride	2.3	UN1008		2.3	2, B9, B14	None	302	314, 315.	Forbidden	Forbidden	D	40
	*	*		*		*	*		*		*		
	Calcium hypochlorite, hydrated *or* Calcium hypochlorite, hydrated mixtures, *with not less than 5.5 percent but not more than 16 percent water*.	5.1	UN2880	II	5.1	IB8, IP2, IP4, W9.	152	212	240	5 kg	25 kg	D	4, 5, 25, 48, 56, 58, 69
	*	*		*		*	*		*		*		
	Carbonyl fluoride	2.3	UN2417		2.3, 8	2	None	302	None	Forbidden	Forbidden	D	40
	*	*		*		*	*		*		*		
+	Chlorodinitrobenzenes, liquid	6.1	UN1577	II	6.1	IB2, T11,TP2, TP27.	None	202	243	5 L	60 L	B	91
+	Chlorodinitrobenzenes, solid	6.1	UN1577	II	6.1	IB8, IP4, T7, TP2.	None	212	242	25 kg	100 kg	A	91

	*	*		*		*	*		*		*			
	1-Chloropropane	3	UN1278	II	3	IB2, N34, T7, TP2.	None	202	242	Forbidden	60 L	E		
	*	*		*		*	*		*		*			
	Chlorosilanes, toxic, corrosive, n.o.s.	6.1	UN3361	II	6.1, 8	IB1, T11, TP2, TP13.	None	202	243	1 L	30 L	C	40	
	Chlorosilanes, toxic, corrosive, flammable, n.o.s..	6.1	UN3362	II	6.1, 3, 8	IB1, T11, TP2, TP13.	None	202	243	1 L	30 L	C	40, 125	
	*	*		*		*	*		*		*			
	Cigar and cigarette lighters, charged with fuel, see Lighters *or* Lighter refills *containing flammable gas*													
	*	*		*		*	*		*		*			
	Cresols, liquid	6.1	UN2076	II	6.1, 8	IB8, IP2, IP4, T7, TP2.	None	202	243	1 L	30 L	B		
	Cresols, solid	6.1	UN2076	II	6.1, 8	IB8, IP2, IP4, T7, TP2.	None	202	243	1 L	30 L	B		
	*	*		*		*	*		*		*			
	Diborane	2.3	UN1911	2.3	2.1	1	None	302	None	Forbidden	Forbidden	D	40, 57	
	*	*		*		*	*		*		*			
	3-Diethylamino-propylamine	3	UN2684	III	3, 8	B1, IB3, T4, TP1.	150	203	242	5 L	60 L	A		
	*	*		*		*	*		*		*			
	N,N-Dimethylcyclo-hexylamine	8	UN2264	II	8, 3	B2, IB2, T7, TP2.	154	202	243	1 L	30 L	A	40	
	*	*		*		*	*		*		*			
	Ethyl methacrylate, stabilized	3	UN2277	II	3	IB2, T4, TP1	150	202	242	5 L	60 L	B		
	*	*		*		*	*		*		*			
	2-Ethylbutyl acetate	3	UN1177	III	3	B1, IB3, T2, TP1.	150	203	242	60 L	220 L	A		
	*	*		*		*	*		*		*			
	Ethylene	2.1	UN1962		2.1	306	304	302	Forbidden.	150kg	E	40		
	*	*		*		*	*		*		*			
	Ethylene glycol diethyl ether	3	UN1153	II	3	IB2, T4, TP1	150	202	242	5 L	60 L	A		
	*	*		*		*	*		*		*			
A, I, W	Fibers, animal *or* Fibers, vegetable *burnt, wet or damp*.	4.2	UN1372	III	4.2		151	213	240	Forbidden	Forbidden	A		
	*	*		*		*	*		*		*			
I, W	Fibers, vegetable, dry	4.1	UN3360	III	4.1	137	151	213	240	No limit	No limit	A		
	*	*		*		*	*		*		*			
	Hexafluoroethane, *or* Refrigerant gas R116.	2.2	UN2193		2.2		306	304	314, 315.	75 kg	150	A		

§ 172.101.—HAZARDOUS MATERIALS TABLE—Continued

Symbols	Hazardous materials descriptions and proper shipping names	Hazard class or division	Identification numbers	PG	Label codes	Special provisions	(8) Packaging (§ 173.***)			(9) Quantity limitations		(10) Vessel stowage	
							Exceptions	Nonbulk	Bulk	Passenger aircraft/rail	Cargo aircraft only	Location	Other
(1)	(2)	(3)	(4)	(5)	(6)	(7)	(8A)	(8B)	(8C)	(9A)	(9B)	(10A)	(10B)
	*	*		*		*	*		*		*		
	Hydrazine, anhydrous	8	UN2029	I	8, 3, 6.1	A3, A6, A7, A10, B7, B16, B53.	None	201	243	Forbidden	2.5 L	D	40, 125
	*	*		*		*	*		*		*		
	Hydrazine aqueous solution, *with more than 37% hydrazine, by mass*.	8	UN2030	I	8, 6.1	151	None	201	243	Forbidden	2.5 L	D	40
				II	8, 6.1		None	202	243	Forbidden	30 L	D	40
				III	8, 6.1		154	203	241	5 L	60 L	D	40
	*	*		*		*	*		*		*		
	Hydrobromic acid, with more than 4 percent hydrobromic acid 9.	8	UN1788										
	*	*		*		*	*		*		*		
	Lighters *or* Lighter refills *containing flammable gas*.	2.1	UN1057		2.1	N10	None	21, 308	None	1 kg	15 kg	B	40
	*	*		*		*	*		*		*		
	Lithium hydroxide	8	UN2680	II	8	IB8, IP2, IP4	154	212	240	15 kg	50 kg	A	
	*	*		*		*	*		*		*		
	2-Methylbutanal	3	UN3371	II	3	IB2, T4, TP1	150	202	242	5 L	60 L	B	
	*	*		*		*	*		*		*		
	Nitrogen trifluoride	2.2	UN2451		2.2, 5.1		None	302	None	75 kg	150 kg	D	40
	*	*		*		*	*		*		*		
	4-Nitrophenylhydrazine, *with not less than 30% water, by mass*.	4.1	UN3376	I	4.1	162, A8, A19, A20, N41.	None	211	None	Forbidden	Forbidden	E	36
	*	*		*		*	*		*		*		
G	Organometallic compound, solid, water-reactive, flammable, n.o.s..	4.3	UN3372	I	4.3, 4.1	IB4, N40	None	211	242	Forbidden	15 kg	E	40
				II	4.3, 4.1	IB4	151	212	242	15 kg	50 kg	E	40
				III	4.3, 4.1	IB6	151	213	241	25 kg	100 kg	E	40
	*	*		*		*	*		*		*		
	Phosphoric acid, liquid	8	UN1805	III	8	A7, IB3, IP3, N34, T4, TP1.	154	203	241	5 L	60 L	A	
	Phosphoric acid, solid	8	UN1805	III	8	IB8, IP3, T3, TP1.	154	213	240	25 kg	100 kg	A	
	*	*		*		*	*		*		*		
	Phosphorus pentafluoride	2.3	UN2198		2.3, 8	2, B9, B14	None	302, 304.	314, 315.	Forbidden	Forbidden	D	40

	*	*		*		*	*		*		*			
	Propyl chloride see 1-Chloropropane.													
	*	*		*		*	*		*		*			
A, W	Rags, oily	4.2	UN1856	III	4.2		151	213	240	Forbidden	Forbidden	A	
	*	*		*		*	*		*		*			
	Refrigerating machines, *containing non-flammable, non-toxic, liquefied or compressed gas or ammonia solution (UN2672)*.	2.2	UN2857		2.2	A53	306, 307.	306	306, 307.	450 kg	450 kg	A	
	*	*		*		*	*		*		*			
	Rubber scrap *or* Rubber shoddy, *powdered or granulated, not exceeding 840 microns and rubber content exceeding 45%*.	4.1	UN1345	II	4.1	IB8, IP2, IP4	151	212	240	15 kg	50 kg	A	
	*	*		*		*	*		*		*			
	Silane	2.1	UN2203		2.1		None	302	None	Forbidden	Forbidden	E	40, 57, 104
	*	*		*		*	*		*		*			
	Silicon tetrafluoride	2.3	UN1859		2.3, 8	2	None	302	None	Forbidden	Forbidden	D	40
	*	*		*		*	*		*		*			
	Sodium dinitro-o-cresolate, wetted, *with not less than 10% water by mass*.	4.1	UN3369	I	4.1	162, A8, A19, N41, N84.	None	211	None	0.5 kg	0.5 kg	E	36
	*	*		*		*	*		*		*			
	1,1,2,2-Tetrachloroethane	6.1	UN1702	II	6.1	IB2, N36, T7, TP2.	None	202	243	5 L	60 L	A	40
	*	*		*		*	*		*		*			
	Tetrafluoromethane, *or* Refrigerant gas R 14.	2.2	UN1982		2.2		None	302	None	75 kg	150 kg	A	
	*	*		*		*	*		*		*			
A, I, W	Textile waste, wet	4.2	UN1857	III	4.2		151	213	240	Forbidden	Forbidden	A	
	*	*		*		*	*		*		*			
	Trinitrobenzene, wetted, *with not less than 10% water by mass*.	4.1	UN3367	I	4.1	162, A8, A19, N41, N84.	None	211	None	0.5 kg	0.5 kg	E	36
	*	*		*		*	*		*		*			
	Trinitrobenzoic acid, wetted, *with not less than 10% water by mass*.	4.1	UN3368	I	4.1	162, A8, A19, N41, N84.	None	211	None	0.5 kg	0.5 kg	E	36
	*	*		*		*	*		*		*			
	Trinitrochlorobenzene (picryl chloride), wetted, *with not less than 10% water by mass*.	4.1	UN3365	I	4.1	162, A8, A19, N41, N84.	None	211	None	0.5 kg	0.5 kg	E	36
	*	*		*		*	*		*		*			
	Trinitrophenol (picric acid), wetted, *with not less than 10% water by mass*.	4.1	UN3364	I	4.1	162, A8, A19, N41, N84.	None	211	None	0.5 kg	0.5 kg	E	36

§ 172.101.—HAZARDOUS MATERIALS TABLE—Continued

Symbols	Hazardous materials descriptions and proper shipping names	Hazard class or division	Identification numbers	PG	Label codes	Special provisions	(8) Packaging (§ 173.***)			(9) Quantity limitations		(10) Vessel stowage	
							Exceptions	Nonbulk	Bulk	Passenger aircraft/rail	Cargo aircraft only	Location	Other
(1)	(2)	(3)	(4)	(5)	(6)	(7)	(8A)	(8B)	(8C)	(9A)	(9B)	(10A)	(10B)
	*	*		*		*	*		*		*		
	Trinitrotoluene (TNT), wetted, *with not less than 10% water by mass*.	4.1	UN3366	I	4.1	162, A8, A19, N41, N84.	None	211	None	0.5 kg	0.5 kg	E	36
	*	*		*		*	*		*		*		
D	Uranyl nitrate hexahydrate solution	7	UN2980		7, 8		421, 427.	415, 416, 417.	415, 416 417.			D	95
	*	*		*		*	*		*		*		
	Urea nitrate, wetted, *with not less than 10% water by mass*.	4.1	UN3370	I	4.1	162, A8, A19, N41, N83.	None	211	None	0.5 kg	0.5 kg	E	36
	*	*		*		*	*		*		*		
A, I, W	Wool waste, wet	4.2	UN1387	III	4.2		151	213	240	Forbidden	Forbidden	A	
	*	*		*		*	*		*		*		
	Xenon	2.2	UN2036		2.2		306	302	None	75 kg	150 kg	A	
	*	*		*		*	*		*		*		
	Xylidines, liquid	6.1	UN1711	II	6.1	IB2, T7, TP2	None	202	243	5 L	60 L	A	
	Revise:												
	Adhesives, *containing a flammable liquid*.	3	UN1133	II	3	149, B52, IB2, T4, TP1, TP8.	150	173	242	5 L	60 L	B	
	*	*		*		*	*		*		*		
	Aerosols, *corrosive, Packing Group II or III, (each not exceeding 1 L capacity*).	2.2	UN1950		2.2, 8	153, A34	306	None	None	75 kg	150 kg	A	48, 87, 126
	Aerosols, *flammable, (each not exceeding 1 L capacity*).	2.1	UN1950		2.1	153, N82	306	None	None	75 kg	150 kg	A	48, 87, 126
	Aerosols, flammable, n.o.s. (*engine starting fluid) (each not exceeding 1 L capacity*).	2.1	UN1950		2.1	153, N82	306	304	None	Forbidden	150 kg	A	48, 87, 126
	Aerosols, *non-flammable, (each not exceeding 1 L capacity*).	2.2	UN1950		2.2	153	306, 307.	None	None	75 kg	150 kg	A	48, 87, 126
	Aerosols, poison, *each not exceeding 1 L capacity*.	2.2	UN1950		2.2	153	306	None	None	Forbidden	Forbidden	A	48, 87, 126
	*	*		*		*	*		*		*		
	Alkylsulfuric acids	8	UN2571	II	8	B2, IB2, T8, TP2, TP12, TP13, TP28.	154	202	242	1 L	30 L	C	14

	*	*		*		*	*		*		*			
	Ammonia solutions, *relative density between 0.880 and 0.957 at 15 degrees C in water, with more than 10 percent but not more than 35 percent Ammonia*.	8	UN2672	III	8	IB3, IP8, T7, TP1.	154	203	241	5 L	60 L	A	40, 85
	*	*		*		*	*		*		*		
	Ammunition, smoke *with or without burster, expelling charge or propelling charge*.	1.2G	UN0015	II	1.2G			62	None	Forbidden	Forbidden		8E, 17E, 20E
	Ammunition, smoke *with or without burster, expelling charge or propelling charge*.	1.3G	UN0016	II	1.3G			62	None	Forbidden	Forbidden		8E, 17E, 20E
	Ammunition, smoke *with or with burster, expelling charge or propelling charge*.	1.4G	UN0303	II	1.4G			62	None	Forbidden	75 kg		7E, 8E, 14E, 15E, 17E
	* *	*		*		*	*		*		*		*
	Arsenic compounds, liquid, n.o.s *inorganic, including arsenates, n.o.s.; arsenites, n.o.s.; arsenic sulfides, n.o.s.; and organic compounds of arsenic, n.o.s.*	6.1	UN1556	I	6.1	T14, TP2, TP9, TP13, TP27.	None	201	243	1 L	30 L	B	40
				II	6.1	IB2, T11, TP2, TP13, TP27.	None	202	243	5 L	60 L	B	40
				III	6.1	IB3, T7, TP2, TP28.	153	203	241	60 L	220 L	B	40
	* *	*		*		*	*		*		*		*
D	Asbestos	9	NA2212	III	9	156, IB8, IP2, IP4.	155	216	240	200 kg	200 kg	A	34, 40
	* *	*		*		*	*		*		*		*
	Barium azide, wetted *with not less than 50 percent water, by mass*.	4.1	UN1571	I	4.1, 6.1	162, A2	None	182	None	Forbidden	0.5 kg	D	28
	* *	*		*		*	*		*		*		*
	Battery fluid, alkali	8	UN2797	II	8	B2, IB2, N6, T7, TP2, TP28.	154	202	242	1 L	30 L	A	26
	* *	*		*		*	*		*		*		*
I	Blue asbestos *(Crocidolite* or Brown asbestos *(amosite, mysorite)*.	9	UN2212	II	9	156, IB8, IP2, IP4.	155	216	240	Forbidden	Forbidden	A	34, 40
	* *	*		*		*	*		*		*		*
	5-tert-Butyl-2,4,6-trinitro-m-xylene *or* Musk xylene.	4.1	UN2956	III	4.1	159	None	223	None	Forbidden	Forbidden	D	12, 25, 48, 127
	* *	*		*		*	*		*		*		*
	Chemical kits	9	UN3316		9	15	161	161	None	10 kg	10 kg	A	
	* *	*		*		*	*		*		*		*
	Chloroacetic acid, molten	6.1	UN3250	II	6.1, 8	IB1, T7, TP3, TP28.	None	202	243	Forbidden	Forbidden	C	40

§ 172.101.—HAZARDOUS MATERIALS TABLE—Continued

Symbols	Hazardous materials descriptions and proper shipping names	Hazard class or division	Identification numbers	PG	Label codes	Special provisions	(8) Packaging (§ 173.***)			(9) Quantity limitations		(10) Vessel stowage	
							Exceptions	Nonbulk	Bulk	Passenger aircraft/rail	Cargo aircraft only	Location	Other
(1)	(2)	(3)	(4)	(5)	(6)	(7)	(8A)	(8B)	(8C)	(9A)	(9B)	(10A)	(10B)
	* *	*		*		*	*		*		*		*
	4-Chloro-o-toluidine hydrochloride	6.1	UN1579	III	6.1	IB8, IP3, T4, TP1.	153	213	240	100 kg	200 kg	A	
	* *	*		*		*	*		*		*		*
	Coating solution *(includes surface treatments or coatings used for industrial or other purposes such as vehicle undercoating, drum or barrel lining)*.	3	UN1139	II	3	149, IB2, T4, TP1, TP8.	150	202	242	5 L	60 L	B	
	* *	*		*		*	*		*		*		*
	Dichlorodimethyl ether, symmetrical	6.1	UN2249	I	6.1, 3		None	201	243	Forbidden	Forbidden	D	40
	* *	*		*		*	*		*		*		*
	Dipicryl dulfide, wetted *with not less than 10 percent water, by mass*.	4.1	UN2852	I	4.1	162, A2, N41, N84.	None	211	None	Forbidden	0.5 kg	D	28
	* *	*		*		*	*		*		*		*
G	Environmentally hazardous substances, liquid, n.o.s.	9	UN3082	III	9	8, 146, IB3, T4, TP1, TP29.	155	203	241	No limit	No limit	A	
G	Environmentally hazardous substances, solid, n.o.s.	9	UN3077	III	9	8, 146, B54, IB8, N20.	155	213	240	No limit	No limit	A	
	* *	*		*		*	*		*		*		*
	Extracts, aromatic, liquid	3	UN1169	II	3	149, IB2, T4, TP1, TP8.	150	202	242	5 L	60 L	B	
	Extracts, flavoring, liquid	3	UN1197	II	3	149, IB2, T4, TP1, TP8.	150	202	242	5 L	60 L	B	
	*	*		*		*	*		*		*		
	First aid kits	9	UN3316		9	15	161	161	None	10 kg	10 kg	A	
W	Fish meal, stabilized *or* Fish scrap, stabilized.	9	UN2216	III		155, IB8	155	218	218	No limit	No limit	B	88, 122, 128
	Fish meal, unstabilized *or* Fish scrap, unstabilized.	4.2	UN1374	II	4.2	155, A1, A19, IB8, IP2.	None	212	241	15 kg	50 kg	B	88, 122, 128
	*	*		*		*	*		*		*		
G	Flammable liquids, n.o.s.	3	UN1993	I	3	T11, TP1, TP27	150	201	243	1 L	30 L	E	
	*	*		*		*	*		*		*		
	Hydrobromic acid, *with not more than 49 percent hydrobromic acid*.	8	UN1788	III	8	IB3, T4, TP1	154	203	241	5 L	60 L	C	8
	*	*		*		*	*		*		*		
	Hydrocarbons, liquid, n.o.s.	3	UN3295	I	3	T11, TP1, TP8, TP28.	150	201	243	1 L	30 L	E	

	*	*		*		*	*		*		*			
	Hydrogen peroxide and peroxyacetic acid mixtures, stabilized *with acids, water and not more than 5 percent peroxyacetic acid*.	5.1	UN3149	II	5.1, 8	145, A2, A3, A6, B53, IB2, IP5, T7, TP2, TP6, TP24.	None	202	243	1 L	5 L	D	25, 66, 75, 106
	*	*		*		*	*		*		*			
	Iodine pentafluoride	5.1	UN2495	I	5.1, 6.1, 8.		None	205	243	Forbidden	Forbidden	D	25, 40, 66, 90
	*	*		*		*	*		*		*			
	Isosorbide dinitrate mixture *with not less than 60 percent lactose, mannose, starch or calcium hydrogen phosphate*.	4.1	UN2907	II	4.1	IB6, IP2, N85	None	212	None	15 kg	50 kg	E	
	*	*		*		*	*		*		*			
	Lithium batteries, contained in equipment.	9	UN3091	II	9	29, A54, A55	185	185	None	5 kg	35kg	A	
	Lithium batteries packed with equipment.	9	UN3091	II	9	29, A54, A55	185	185	None	5 kg gross	35 kg gross.	A	
	Lithium battery	9	UN3090	II	9	29, A54, A55	185	185	None	5 kg gross	35 kg gross.	A	
	*	*		*		*	*		*		*			
	Medicine, liquid, toxic, n.o.s.	6.1	UN1851	II	6.1	36	153	202	243	5 L	5 L	C	40
				III	6.1	36	153	203	241	5 L	5 L	C	40
	*	*		*		*	*		*		*			
	Methacrylic Acid, stabilized	8	UN2531	II	8	IB3, T4, TP1, TP18, TP 30.	154	202	242	1 L	30 L	C	40
	*	*		*		*	*		*		*			
	Methyl bromide	2.3	UN1062		2.3	3, B14, T50, 153.	None	193	314, 315.	Forbidden	Forbidden	D	40
	*	*		*		*	*		*		*			
	Morpholine	8	UN2054	I	8, 3	T10, TP2	None	201	243	.5 L	2.5 L	A	
	*	*		*		*	*		*		*			
I	Motor fuel anti-knock mixtures	6.1	UN1649	I	6.1	14, 151, B9, B90, T14, TP2, TP13.	None	201	244	Forbidden	30 L	D	25, 40
	*	*		*		*	*		*		*			
G	Organic peroxide type F, solid, temperature controlled.	5.2	UN3120	II	5.2	IB52, T23	None	225	225	Forbidden	Forbidden	D	2
	Organochlorine pesticides, liquid, toxic, flammable, *flash point not less than 23 degrees C*.	6.1	UN2995	III	6.1, 3	B1, IB3, T7, TP2, TP28.	153	203	242	60 L	220 L	A	40
	*	*		*		*	*		*		*			
	Organophosphorus compound, toxic, flammable, n.o.s.	6.1	UN3279	I	6.1, 3	5, T14, TP2, TP13, TP27.	None	201	243	1 L 30	L	B	40

§ 172.101.—HAZARDOUS MATERIALS TABLE—Continued

Symbols	Hazardous materials descriptions and proper shipping names	Hazard class or division	Identification numbers	PG	Label codes	Special provisions	(8) Packaging (§ 173.***)			(9) Quantity limitations		(10) Vessel stowage	
							Exceptions	Nonbulk	Bulk	Passenger aircraft/rail	Cargo aircraft only	Location	Other
(1)	(2)	(3)	(4)	(5)	(6)	(7)	(8A)	(8B)	(8C)	(9A)	(9B)	(10A)	(10B)
	*	*		*		*	*		*		*		
	Paint *including paint, lacquer, enamel, stain, shellac solutions, varnish, polish, liquid filler, and liquid lacquer base*.	3	UN1263	II	3	149, B52, IB2, T4, TP1, TP8.	150	173	242	5 L	60 L	B	
	*	*		*		*	*		*		*		
	Paint related material *including paint thinning, drying, removing, or reducing compound*.	3	UN1263	II	3	149, B52, IB2, T4, TP1, TP8.	150	173	242	5 L	60 L	B	
	*	*		*		*	*		*		*		
	Pentaerythrite tetranitrate mixture, desensitized, solid, n.o.s. *with more than 10 percent but not more than 20 percent PETN, by mass*.	4.1	UN3344	II	4.1	118, N85	None	214	None	Forbidden	Forbidden	E	
	*	*		*		*	*		*		*		
	Perfumery products *with flammable solvents*.	3	UN1266	II	3	149, IB2, T4, TP1, TP8.	150	202	242	15 L	60 L	B	
	*	*		*		*	*		*		*		
	Phosphorus, white dry *or* Phosphorus, white, under water *or* Phosphorus white, in solution or Phosphorus yellow dry *or* Phosphorus, yellow, under water *or* Phosphorus, yellow, in solution.	4.2	UN1381	I	4.2, 6.1	B9, B26, N34, T9, TP3, TP31.	None	188	243	Forbidden	Forbidden	E	
	*	*		*		*	*		*		*		
	Piperazine	8	UN2579	III	8	IB8, IP3, T4, TP1, TP30.	154	213	240	25 kg	100	A	12
	*	*		*		*	*		*		*		
	Polyester resin	3	UN3269		3	40, 149	152	225	None	5 kg	5 kg	B	
	*	*		*		*	*		*		*		
	Potassium	4.3	UN2257	I	4.3	A19, A20, B27, IB1, IP1, N6, N34, T9, TP3, TP7, TP31.	None	211	244	Forbidden	15 kg	D	
	*	*		*		*	*		*		*		
	Potassium sodium alloys	4.3	UN1422	I	4.3	A19, B27, IB4, IP1, N34, N40, T9, TP3, TP7, TP31.	None	211	244	Forbidden	15 kg	D	

	*	*		*		*	*		*		*			
	Printing ink, *flammable or* Printing ink related material *(including printing ink thinning or reducing compound), flammable*.	3	UN1210	II	3	149, IB2, T4, TP1, TP8.	150	173	242	5 L	60 L	B	
	*	*		*		*	*		*		*		
D	Radioactive material, fissile, n.o.s	7	UN2918		7	A56	453	417	417			A	95, 105
I	Radioactive material, low specific activity (LSA–I) *non fissile or fissile-excepted*.	7	UN2912		7	A56, T5, TP4, W7.	421, 422, 428.	427	427			A	95, 129
	*	*		*		*	*		*		*		
I	Radioactive material, low specific activity (LSA–II) *non fissile or fissile-excepted*.	7	UN3321		7	A56, T5, TP4, W7.	421, 422, 428.	427	427			A	95, 129
I	Radioactive material, low specific activity (LSA–III) *non fissile or fissile excepted*.	7	UN3322		7	A56, T5, TP4, W7.	421, 422, 428.	427	427			A	95, 129
D	Radioactive material, low specific activity, n.o.s. *or* Radioactive material, LSA, n.o.s.	7	UN2912		7	A56, T5, TP4	421, 428.	427	427			A	95, 129
D	Radioactive material, n.o.s	7	UN2982		7	A56	421, 428.	415, 416.	415, 416.			A	95
D	Radioactive material, special form, n.o.s.	7	UN2974		7	A56	421, 424.	415, 416.	415, 416.			A	95
D	Radioactive material, surface contaminated object *or* Radioactive material, SCO.	7	UN2913		7	A56	421, 424, 426.	427	427			A	95
I	Radioactive material, surface contaminated objects (SCO–I *or* SCO–II) *non fissile or fissile-excepted*.	7	UN2913		7	A56	421, 422, 428.	427	427			A	95
I	Radioactive material, transported under special arrangement, *non fissile or fissile excepted*.	7	UN2919		7	A56, 139						A	95, 105
I	Radioactive material, transported under special arrangement, fissile.	7	UN3331		7	A56, 139						A	95, 105
I	Radioactive material, Type A package, fissile *non-special form*.	7	UN3327		7	A56, W7, W8	453	417	417			A	95, 105, 131
I	Radioactive material, Type A package *non-special form, non fissile or fissile-excepted*.	7	UN2915		7	A56, W7, W8		415	415			A	95, 130
I	Radioactive material, Type A package, special form *non fissile or fissile-excepted*.	7	UN3332		7	A56, W7, W8		415, 476.	415, 476.			A	95
I	Radioactive material, Type A package, special form, fissile.	7	UN3333		7	A56, W7, W8	453	417, 476.	417, 476.			A	95, 105
I	Radioactive material, Type B(M) package, fissile.	7	UN3329		7	A56	453	417	417			A	95, 105
I	Radioactive material, Type B(M) package *non fissile or fissile-excepted*.	7	UN2917		7	A56		416	416			A	95, 105
I	Radioactive material, Type B(U) package, fissile..	7	UN3328		7	A56	453	417	417			A	95, 105
I	Radioactive material, Type B(U) package *non fissile or fissile-excepted*.	7	UN2916		A56	416	416					A	95, 105

§ 172.101.—HAZARDOUS MATERIALS TABLE—Continued

Symbols	Hazardous materials descriptions and proper shipping names	Hazard class or division	Identification numbers	PG	Label codes	Special provisions	(8) Packaging (§ 173.***)			(9) Quantity limitations		(10) Vessel stowage	
							Exceptions	Nonbulk	Bulk	Passenger aircraft/rail	Cargo aircraft only	Location	Other
(1)	(2)	(3)	(4)	(5)	(6)	(7)	(8A)	(8B)	(8C)	(9A)	(9B)	(10A)	(10B)
I	Radioactive material, uranium hexafluoride *non fissile or fissile-excepted*.	7	UN2978		7, 8		423	420, 427.	420, 427.			A	95, 132
	Radioactive material, uranium hexafluoride, fissile.	7	UN2977		7, 8		453	417, 420.	417, 420.			A	95, 132
	* *	*		*		*	*		*		*		*
	Resin solution, *flammable*	3	UN1866	II	3	149, B52, IB2, T4, TP1, TP8.	150	173	242	5 L	60 L	B	
	* *	*		*		*	*		*		*		*
	Rubber solution	3	UN1287	II	3	149, IB2, T4, TP1, TP8.	150	202	242	5 L	60 L	B	
	* *	*		*		*	*		*		*		*
G	Self-reactive liquid type F	4.1	UN3229	II	4.1	T23	None	114	None	10 L	25L	D	61
	* *	*		*		*	*		*		*		*
	Silver picrate, wetted *with not less than 30 percent water, by mass*.	4.1	UN1347	I	4.1	23	None	211	None	Forbidden	Forbidden	D	28, 36
	* *	*		*		*	*		*		*		*
	Sludge, acid	8	UN1906	II	8	A3, A7, B2, IB2, N34, T8, TP2, TP12, TP28.	None	202	242	Forbidden	30 L	C	14
	* *	*		*		*	*		*		*		*
	Sodium	4.3	UN1428	I	4.3	A7, A8, A19, A20, B9, B48, B68, IB4, IP1, N34, T9, TP3, TP7, TP31, TP46.	None	211	244	Forbidden	15 kg	D	
	* *	*		*		*	*		*		*		*
D	Sulfur, molten	9	NA2448	III	9	30, IB3, T1, TP3	None	213	247	Forbidden	Forbidden	C	61
I	Sulfur, molten	4.1	UN2448	III	4.1	30, IB1, T1, TP3	None	213	247	Forbidden	Forbidden	C	74
	*	*		*		*	*		*		*		
	Tars, liquid *including road asphalt and oils, bitumen and cut backs*.	3	UN1999	II	3	149, B13, IB2, T3, TP3, TP29.	150	202	242	5 L	60 L	B	
	*	*		*		*	*		*		*		
D	Thorium metal, pyrophoric	7	UN2975		7, 4.2	A56	None	418	None				95
D	Thorium nitrate, solid	7	UN2976		7, 5.1		None	419	None	Forbidden	15 kg	A	95

	*	*		*		*	*		*		*		
D	Uranium hexafluoride, *fissile excepted or non-fissile*.	7	UN2978		7, 8		423	420,, 427.	420, 427.			A	95, 132
D	Uranium hexafluoride, fissile (*with more than 1 percent U–235*).	7	UN2977		7, 8		453	417, 420.	417, 420.			A	95, 132
D	Uranium metal, pyrophoric	7	UN2979		7, 4.2	A56	None	418	None			D	95
	*	*		*		*	*		*		*		
D	Uranyl nitrate, solid	7	UN2981		7, 5.1		None	419	None	Forbidden	15 kg	A	95
	*	*		*		*	*		*		*		
	Urea nitrate, weted *with not less than 20 percent water, by mass*.	4.1	UN1357	I	4.1	23, 39, A8, A19, N41.	None	211	None	1 kg	15 kg	E	28, 36
	*	*		*		*	*		*		*		
	Vehicle, flammable gas powered	9	UN3166		9	135, 157	220	220	220	Forbidden	No limit	A	
	Vehicle, flammable liquid powered.	9	UN3166		9	135, 157	220	220	220	No limit	No limit	A	
	*	*		*		*	*		*		*		
I	White asbestos (*chrysotile, actinolite, anthophyllite, tremolite*).	9	UN2590	III	9	156, IB8, IP2, IP3.	155	216	240	200 kg	200 kg	A	34, 40
	Wood preservatives, liquid	3	UN1306	II	3	149, IB2, T4, TP1, TP8.	150	202	242	5 L	60 L	B	
	*	*		*		*	*		*		*		

■ 11. In Appendix B to § 172.101, paragraphs 4. and 5. are revised and the List of Marine Pollutants is amended by removing 5 entries, and adding 2 entries in appropriate alphabetical order to read as follows:

Appendix B to § 172.101—List of Marine Pollutants.

* * * * *

4. If a material is not listed in this appendix and meets the criteria for a marine pollutant as provided in Chapter 2.10 of the IMDG Code, ''Guidelines for the Identification of Harmful Substances in Packaged Form'' (incorporated by reference; see § 171.7 of this subchapter), the material may be transported as a marine pollutant in accordance with the applicable requirements of this subchapter.

5. If a material listed in this appendix does not meet the criteria for a marine pollutant as provided in Chapter 2.10 of the IMDG Code, ''Guidelines for the Identification of Harmful Substances in Packaged Form'' (incorporated by reference; see § 171.7 of this subchapter), it may be excepted from the requirements of this subchapter as a marine pollutant if that exception is approved by the Associate Administrator.

* * * * *

LIST OF MARINE POLLUTANTS

S, M, P (1)	(2)
[Remove:]	
	Alkylbenzenesulphonates, branched and straight chain
	Alkylphenols, liquid, n.o.s. *(including C2–C12 homologues)*
	Alkylphenols, solid, n.o.s. *(including C2–C12 homologues)*
* *	* * * * *
	Chlorophenols, liquid
	Chlorophenols, solid
[Add:]	
* *	* * * * *
	Alkybenzenesulphonates, branched and straight chain *(excluding C11–C13 straight chain or branched chain homologues)*
* *	* * * * *
	Decyl acrylate
* *	* * * * *

■ 11a. In § 172.102:

■ a. In paragraph (c)(1), Special Provisions 15, 30, 52, 130, 132 and 134 are revised; Special Provisions 7, 10 and 133 are removed; and Special Provisions 145, 146, 147, 149, 150, 151, 153, 155, 156, 157, 159, 160, 161 and 162 are added.

■ b. In paragraph (c)(2), Special Provisions A54, A55 and A56 are added.

■ c. In paragraph (c)(4), the text is revised; in Table 1, Special Provision IB3 is revised; in Table 2, the Table heading is revised, 1 entry is removed, 4 entries are added, and 1 entry is revised; and in Table 3, Special Provision IP8 is added.

■ d. In paragraph (c)(5), Special Provisions N83, N84 and N85 are added.

■ e. In paragraph (c)(7)(iii), Portable Tank Code T23 is amended by removing 2 entries, adding 4 entries, and revising 2 entries.

■ e. In paragraph (c)(7)(viii), Special Provision TP3 is revised.

The additions and revisions read as follows:

§ 172.102 Special provisions.

* * * * *

(c) * * *

(1) * * *

Code/Special Provisions

* * * * *

15 This entry applies to ''Chemical kits'' and ''First aid kits'' containing one or more compatible items of hazardous materials in boxes, cases, etc. that are used for medical, analytical, diagnostic or testing purposes. For transportation by aircraft, materials forbidden for transportation by passenger aircraft or cargo aircraft may not be included in the kits. The quantity of hazardous materials in any inner packaging must not exceed the limited quantity inner packaging limits specified for each hazardous material in the applicable limited quantity sections (§ 173.150 through § 173.155, and § 173.306) in part 173 of this subchapter. Each package must conform to the packaging requirements of subpart B of part 173 and must not exceed 30 kg (66 lbs.) gross weight. Chemical kits and first aid kits are excepted from the specification packaging requirements of this subchapter when packaged in combination packagings. Chemical kits and first aid kits are also excepted from the labeling and placarding requirements of this subchapter, except when offered for transportation or transported by air. Chemical and first aid kits may be transported in accordance with the consumer commodity and ORM exceptions in § 173.156, provided they meet all required conditions. Kits that are carried on board transport vehicles for first aid or operating purposes are not subject to the requirements of this subchapter.

* * * * *

30 Sulfur is not subject to the requirements of this subchapter if transported in a non-bulk packaging or if formed to a specific shape (for example, prills, granules, pellets, pastilles, or flakes). A bulk packaging containing sulfur is not subject to the placarding requirements of subpart F of this part, if it is marked with the appropriate identification number as required by subpart D of this part. Molten sulfur must be marked as required by § 172.325 of this subchapter.

* * * * *

52 This entry may only be used for substances that do not exhibit explosive properties of Class 1 (explosive) when tested in accordance with Test Series 1 and 2 of Class 1 (explosive) in the UN Manual of Tests and Criteria, Part I (incorporated by reference; see § 171.7 of this subchapter).

* * * * *

130 For other than a dry battery specifically covered by another entry in the § 172.101 Table, ''Batteries, dry'' are not subject to the requirements of this

subchapter when they are securely packaged and offered for transportation in a manner that prevents the dangerous evolution of heat (for example, by the effective insulation of exposed terminals) and protects against short circuits.

* * * * *

132 This entry may only be used for uniform, ammonium nitrate-based fertilizer mixtures, containing nitrogen, phosphate or potash, meeting the following criteria: (1) Contains not more than 70% ammonium nitrate; and (2) Contains not more than 0.4% total combustible, organic material calculated as carbon or with not more than 45% ammonium nitrate and unrestricted combustible material. Fertilizers within these composition limits are only subject to the requirements of this subchapter when transported by aircraft or vessel, and are not subject to the requirements of this subchapter if shown by a trough test, as specified in the UN Manual of Tests and Criteria, Part III, sub-section 38.2 (incorporated by reference; see § 171.7 of this subchapter), not to be liable to self-sustaining decomposition.

* * * * *

134 This entry only applies to vehicles, machinery and equipment which are powered by wet batteries, sodium batteries, or lithium batteries and which are transported with these batteries installed. Examples of such items are electrically-powered cars, lawn mowers, wheelchairs and other mobility aids. A self-propelled vehicle which also contain an internal combustion engine must be consigned under the entry ''Vehicle, flammable gas powered'' or ''Vehicle, flammable liquid powered'', as appropriate.

* * * * *

145 This entry applies to formulations that neither detonate in the cavitated state nor deflagrate in laboratory testing, show no effect when heated under confinement, exhibit no explosive power, and are thermally stable (self-accelerating decomposition temperature (SADT) at 60 °C (140 °F) or higher for a 50 kg (110.2 lbs.) package). Formulations not meeting these criteria must be transported under the provisions applicable to the appropriate entry in the Organic Peroxide Table in § 173.225 of this subchapter.

146 This description may be used for a material that poses a hazard to the environment but does not meet the definition for a hazardous waste or a hazardous substance, as defined in § 171.8 of this subchapter, or any hazard class as defined in Part 173 of this subchapter, if it is designated as environmentally hazardous by the Competent Authority of the country of origin, transit or destination.

147 This entry applies to non-sensitized emulsions, suspensions and gels consisting primarily of a mixture of ammonium nitrate and a fuel intended to produce a Type E blasting explosive only after further processing. The mixture typically has the following composition: 60—85% ammonium nitrate; 5—30% water; 2—8% fuel; 0.5—4% emulsifier or thickening agent; 0—10% soluble flame suppressants; and trace additives. Other inorganic nitrate salts may replace part of the ammonium nitrate. These substances may not be classified and transported unless approved by the Associate Administrator.

149 When transported as a limited quantity or a consumer commodity, the maximum net capacity specified in § 173.150(b)(2) of this subchapter for inner packagings may be increased to 5 L (1.3 gallons).

150 This description may be used only for uniform mixtures of fertilizers containing ammonium nitrate as the main ingredient within the following composition limits:

a. Not less than 90% ammonium nitrate with not more than 0.2% total combustible, organic material calculated as carbon, and with added matter, if any, that is inorganic and inert when in contact with ammonium nitrate; or

b. Less than 90% but more than 70% ammonium nitrate with other inorganic materials, or more than 80% but less than 90% ammonium nitrate mixed with calcium carbonate and/or dolomite, and not more than 0.4% total combustible, organic material calculated as carbon; or

c. Ammonium nitrate-based fertilizers containing mixtures of ammonium nitrate and ammonium sulphate with more than 45% but less than 70% ammonium nitrate, and not more than 0.4% total combustible, organic material calculated as carbon such that the sum of the percentage of compositions of ammonium nitrate and ammonium sulphate exceeds 70%.

151 If this material meets the definition of a flammable liquid in § 173.120 of this subchapter, a FLAMMABLE LIQUID label is also required and the basic description on the shipping paper must indicate the Class 3 subsidiary hazard.

153 The following applies to aerosols:

a. Division 2.1 applies when the aerosol is flammable according to § 173.306(i) of this subchapter.

b. Division 2.2 applies when the contents of the aerosol do not meet the criteria for Division 2.1, or Division 2.3.

c. Division 2.3 gases may not be used in an aerosol dispenser.

d. When the contents are classified as Division 6.1 or Class 8, the aerosol must have a subsidiary risk of Division 6.1 or Class 8.

e. Aerosols with contents meeting the criteria for PG I and PG II for Division 6.1 or Class 8 are forbidden for transportation.

f. Aerosols must meet the definition of aerosols in § 171.8 of this subchapter.

155 Fish meal or fish scrap may not be transported if the temperature at the time of loading either exceeds 35 °C (95 °F), or exceeds 5 °C (41 °F) above the ambient temperature, whichever is higher.

156 Asbestos that is immersed or fixed in a natural or artificial binder material, such as cement, plastic, asphalt, resins or mineral ore, or contained in manufactured products is not subject to the requirements of this subchapter.

157 This entry includes hybrid electric vehicles powered by both an internal combustion engine and wet, sodium or lithium batteries, transported with one or more batteries installed. Vehicles containing an internal combustion engine must be described as ''Vehicle, flammable gas powered,'' UN3166, or ''Vehicle, flammable liquid powered,'' UN3166, as appropriate.

159 This material must be protected from direct sunshine and kept in a cool, well-ventilated place away from sources of heat.

160 This entry applies to articles that are used as life-saving vehicle air bag inflators, air bag modules or seat-belt pretensioners containing Class 1 (explosive) materials or materials of other hazard classes. Air bag inflators and modules must be tested in accordance with Test series 6(c) of Part I of the UN Manual of Tests and Criteria (incorporated by reference; see § 171.7 of this subchapter), with no explosion of the device, no fragmentation of device casing or pressure vessel, and no projection hazard or thermal effect that would significantly hinder fire-fighting or other emergency response efforts in the immediate vicinity. If the air bag inflator unit satisfactorily passes the series 6(c) test, it is not necessary to repeat the test on the air bag module.

161 For domestic transport, air bag inflators, air bag modules or seat belt pretensioners that meet the criteria for a Division 1.4G explosive must be transported using the description, ''Articles, pyrotechnic *for technical purposes*,'' UN0431.

162 This material may be transported under the provisions of Division 4.1 only if it is packed so that at no time during transport will the percentage of diluent fall below the percentage that is stated in the shipping description.

(2) * * *

Code/Special Provisions

* * * * *

A54 Lithium batteries or lithium batteries contained or packed with equipment that exceed the maximum gross weight allowed by Column (9B) of the § 172.101 Table may only be transported on cargo aircraft if approved by the Associate Administrator.

A55 Prototype lithium batteries and cells that are packed with not more than 24 cells or 12 batteries per packaging that have not completed the test requirements in Sub-section 38.3 of the UN Manual of Tests and Criteria (incorporated by reference; see § 171.7 of this subchapter) may be transported by cargo aircraft if approved by the Associate Administrator and provided the following requirements are met:

a. The cells and batteries must be transported in rigid outer packagings that conform to the requirements of Part 178 of this subchapter at the Packing Group I performance level; and

b. Each cell and battery must be protected against short circuiting, must be surrounded by cushioning material that is non-combustible and non-conductive, and must be individually packed in an inner packaging that is placed inside an outer specification packaging.

A56 Radioactive material with a subsidiary hazard of Division 4.2, Packing Group I, must be transported in Type B packages when offered for transportation by aircraft. Radioactive material with a subsidiary hazard of Division 2.1 is forbidden from transport on passenger aircraft.

* * * * *

(4) *Table 1, Table 2, and Table 3—IB Codes, Organic Peroxide IBC Code, and IP Special IBC Packing Provisions.* These provisions apply only to transportation in IBCs. When no IBC code is assigned in the § 172.101 Table for a specific proper shipping name, an IBC may be authorized when approved by the Associate Administrator. When only certain types of IBCs are authorized in Table 2 (IBC Code IB52), alternative types of IBCs may be authorized when approved by the Associate Administrator. The letter ''Z'' shown in the marking code for composite IBCs must be replaced with a capital code letter designation found in § 178.702(a)(2) of this subchapter to specify the material used for the outer packaging. Tables 1, 2, and 3 follow:

TABLE 1.—IB CODES (IBC CODES)

IBC code	Authorized IBCs
* *	* * * * *
IB3	*Authorized IBCs:* Metal (31A, 31B and 31N); Rigid plastics (31H1 and 31H2); Composite (31HZ1 and 31HA2, 31HB2, 31HN2, 31HD2 and 31HH2). *Additional Requirement:* Only liquids with a vapor pressure less than or equal to 110 kPa at 50 °C (1.1 bar at 122 °F), or 130 kPa at 55 °C (1.3 bar at 131 °F) are authorized, except for UN2672 (also see Special Provision IP8 in Table 3 for UN2672).
* *	* * * * *

TABLE 2.—ORGANIC PEROXIDE IBC CODE (IB52)

UN No.	Organic peroxide	Type of IBC	Maximum quantity (liters)	Control temperature	Emergency temperature
* *	* *	*	*	*	
	REMOVE:				
3109	Di-tert-butyl peroxide, not more than 52% in diluent type A.	31A 31HA1	1250 1000		
	ADD:				
* *	* *	*	*	*	
3109	Dicumyl peroxide, less than or equal to 100%.	31A 31HA1	1250 1000		
* *	* *	*	*	*	
3109	Di-tert-butyl peroxide, not more than 52% on diluent type B.	31A 31HA1	1250 1000		
* *	* *	*	*	*	
	Peroxyacetic acid, with not more than 26% hydrogen peroxide.	31A 31HA1	1500 1500		
* *	* *	*	*	*	
	Peroxyacetic acid, type F, stabilized.	31A 31HA1	1500 1500		
* *	* *	*	*	*	
3110	REVISE:				
* *	* *	*	*	*	
	Dicumyl peroxide, less than or equal to 100%.	31A	2000		

TABLE 2.—ORGANIC PEROXIDE IBC CODE (IB52)—Continued

UN No.	Organic peroxide	Type of IBC	Maximum quantity (liters)	Control temperature	Emergency temperature
* *	*	*	*	*	*

TABLE 3.—IP CODES

*	*	*	*	*	*	*

IP8 Ammonia solutions may be transported in rigid or composite plastic IBCs (31H1, 31H2 and 31HZ1) that have successfully passed, without leakage or permanent deformation, the hydrostatic test specified in § 178.814 of this subchapter at a test pressure that is not less than 1.5 times the vapor pressure of the contents at 55 °C (131 °F).

(5) * * *

Code/Special Provisions

* * * * *

N83 This material may not be transported in quantities of more than 11.5 kg (25.4 lbs) per package.

N84 The maximum quantity per package is 500 g (1.1 lbs.).

N85 Packagings certified at the Packing Group I performance level may not be used.

* * * * *

(7) * * *

(iii) * * *

PORTABLE TANK CODE T23

[Portable tank code T23 applies to self-reactive substances of Division 4.1 and organic peroxides of Division 5.2.]

UN No.	Hazardous material	Minimum test pressure (bar)	Minimum shell thickness (mm-reference steel) See . . .	Bottom opening requirements See . . .	Pressure-relief requirements See . . .	Filling limits	Control temperature	Emergency temperature
*	*		*	*	*	*	*	
	REMOVE:							
3119	tert-Butyl peroxyacetate, not more than 32% in diluent Type B.	4	§ 178.274(d)(2)	§ 178.275(d)(3)	§ 178.275(g)(1)	Not more than 90% at 59 °F (15 °C).	+30 °C	+35 °C
3120	Organic peroxide Type F, solid, temperature controlled.	4	§ 178.274(d)(2)	§ 178.275(d)(3)	§ 178.275(g)(1)	Not more than 90% at 59 °F (15 °C).	As approved by Assoc. Admin.	As approved by Assoc. Admin
*	*		*	*	*	*	*	
	ADD:							
*	*		*	*	*	*	*	
3109	Dicumyl peroxide, less than or equal to 100% in diluent Type B.	4	§ 178.274(d)(2)	§ 178.275(d)(3)	§ 178.275(g)(1)	Not more than 90% at 59 °F (15 °C).		
*	*		*	*	*	*	*	
3119	tert-Butyl peroxyacetate, not more than 32% in diluent Type B.	4	§ 178.274(d)(2)	§ 178.275(d)(3)	§ 178.275(g)(1)	Not more than 90% at 59 °F (15 °C).	+30 °C	+35 °C
*	*		*	*	*	*	*	
	Peroxyacetic acid, distilled, stabilized, not more than 41%.	4	§ 178.274(d)(2)	§ 178.275(d)(3)	§ 178.275(g)(1)	Not more than 90% at 59 °F (15 °C).	+30 °C	+35 °C
3120	Organic peroxide Type F, solid, temperature controlled.	4	§ 178.274(d)(2)	§ 178.275(d)(3)	§ 178.275(g)(1)	Not more than 90% at 59 °F (15 °C).	As approved by Assoc. Admin.	As approved by Assoc. Admin
*	*		*	*	*	*	*	
	REVISE:							

PORTABLE TANK CODE T23—Continued

[Portable tank code T23 applies to self-reactive substances of Division 4.1 and organic peroxides of Division 5.2.]

UN No.	Hazardous material	Minimum test pressure (bar)	Minimum shell thickness (mm-reference steel) See . . .	Bottom opening requirements See . . .	Pressure-relief requirements See . . .	Filling limits	Control temperature	Emergency temperature
*	*		*	*	*	*	*	
3110	Dicumyl peroxide less than r equal to 100% with inert solids. Maximum quantity per portable tank 2,000 kg.	4	§ 178.274(d)(2) ..	§ 178.275(d)(3) ..	§ 178.275(g)(1) ..	Not more than 90% at 59 °F (15 °C).		
*	*		*	*	*	*	*	
3119	tert-Butyl peroxypivalate, not more than 27% in diluent Type B.	4	§ 178.274(d)(2) ..	§ 178.275(d)(3) ..	§ 178.275(g)(1) ..	Not more than 90% at 59 °F (15 °C).	+5 °C	+10 °C

(viii)* * *

Code/Special Provisions

* * * * *

TP3 For materials transported under elevated temperatures, the maximum degree of filling is determined by the following:

$$\left(\text{Degree of filling} = 95\frac{d_t}{d_f}\right).$$

Where:

d_t is the density of the material at the maximum mean bulk temperature during transport; and

d_f is the density of the material at the temperature in degrees celsius of the material during filling; and

* * * * *

■ 12. In § 172.202, paragraphs (a)(2), (a)(5) and (b) are revised and (a)(6) is added to read as follows:

§ 172.202 Description of hazardous material on shipping papers.

(a) * * *

(2) The hazard class or division number prescribed for the material, as shown in Column (3) of the § 172.101 Table. Except for combustible liquids, the subsidiary hazard class(es) or subsidiary division number(s) must be entered in parentheses immediately following the primary hazard class or division number. The words ''Class'' or ''Division'' may be included preceding the primary and subsidiary hazard class or division numbers. The hazard class need not be included for the entry ''Combustible liquid, n.o.s.'';

* * * * *

(5) The total quantity of hazardous materials covered by the description must be indicated (by mass or volume, or by activity for Class 7 materials) and must include an indication of the applicable unit of measurement. For example, ''200 kgs.'' or ''50 L.'' The following provisions also apply:

(i) For Class 1 materials, the quantity must be the net explosive mass.

(ii) For hazardous materials in salvage packaging, an estimate of the total quantity is acceptable.

(iii) The following are excepted from the requirements of paragraph (a)(5) of this section:

(A) Bulk packages, provided some indication of the total quantity is shown, for example, ''1 cargo tank'' or ''2 IBCs.''

(B) Cylinders, provided some indication of the total quantity is shown, for example, ''10 cylinders''.

(C) Packages containing only residue.

(6) The number and type of packages must be indicated. The type of packages may be indicated by description and by packaging specification number when applicable (for example, ''12 drums'', ''12 UN 1A1'', ''15 4G'', or ''2 UN 3H1 jerricans.'' Abbreviations may be used for indicating packaging types (for example, cyl. for cylinder), provided the abbreviations are commonly accepted and recognizable.

(b) Except as provided in this subpart, the basic description specified in paragraphs (a)(1), (2), (3) and (4) of this section must be shown in sequence with no additional information interspersed. For example, ''Cyclobutyl chloroformate, 6.1, (8,3), UN2744, PG II''. Alternatively, the basic description may be shown with the identification (ID) number listed first. For example, ''UN2744, Cyclobutyl chloroformate, 6.1, (8, 3), PG II.''

* * * * *

§ 172.203 [Amended]

■ 13. In § 172.203, paragraphs (i)(1), (i)(2), (i)(3) and (i)(6) are removed and paragraphs (i)(4) and (i)(5) are redesignated (i)(1) and (i)(2), respectively.

■ 14. In § 172.301, paragraph (a)(1) is revised to read as follows:

§ 172.301 General marking requirements for non-bulk packagings.

(a) * * *

(1) Except as otherwise provided by this subchapter, each person who offers a hazardous material for transportation in a non-bulk packaging must mark the package with the proper shipping name and identification number (preceded by ''UN'' or ''NA,'' as appropriate) for the material as shown in the § 172.101 Table. Identification numbers are not required on packagings that contain only ORM–D materials or limited quantities, as defined in § 171.8 of this subchapter, except for limited quantities marked in accordance with the marking requirements in § 172.315.

* * * * *

15. In § 172.312, a new paragraph (c)(6) is added to read as follows:

§ 172.312 Liquid hazardous materials in non-bulk packagings.

* * * * *

(c) * * *

(6) Packages containing liquid infectious substances in primary receptacles not exceeding 50 ml (1.7 oz.).

■ 16. A new section § 172.315 is added to read as follows:

§ 172.315 Packages containing limited quantities.

Except as otherwise provided in this subchapter, a package containing a limited quantity of hazardous materials is not required to be marked with the proper shipping name provided it is marked with the identification (ID) number, preceded by the letters ''UN'' or ''NA,'' as applicable, for the entry as shown in the § 172.101 Table, and placed within a square-on-point border in accordance with the following:

(a) The ID number marking must be durable, legible and of such a size relative to the package as to be readily visible. The width of line forming the square-on-point must be at least 2 mm and the height of the ID number must be at least 6 mm. The marking must be applied on at least one side or one end of the outer packaging.

(b) When two or more hazardous materials with different ID numbers are contained in the package, the packaging must be marked with either individual square-on-points bearing a single ID number, or a single square-on-point large enough to include each applicable ID number.

■ 17. A new section § 172.321 is added to read as follows:

§ 172.321 Air eligibility mark.

(a) *General*. Except as otherwise specified in this subchapter, each person who offers for transportation by aircraft a hazardous material in a non-bulk package must mark the package as required by this section to indicate that it meets the applicable requirements for air transport. The marking is a certification that the person offering the package for transportation has determined that it meets the air transport requirements of this subchapter; such as, the package is authorized and properly marked and labeled, its contents are properly classed and within quantity limits for air transport, and it conforms to all relevant packaging provisions such as those pertaining to closures, compatibility, pressure differential, and use of absorbent materials.

(b) *Location and design*. The marking must—

(1) Be placed adjacent to the markings prescribed in § 172.301(a);

(2) Be durable, legible and of a size relative to the package so as to be readily visible;

(3) Include an aircraft within a circle and may include the words ''Air Eligible'' in conjunction with the mark, such as:

Air Eligible

(c) *Exceptions from the air eligibility mark*. The air eligibility mark is not required for—

(1) Packages that are transported in accordance with the small quantity exceptions in § 173.4 of this subchapter;

(2) Packages that contain solid carbon dioxide (dry ice) and no other materials subject to the requirements of this subchapter;

(3) Except when overpacked, hazardous materials contained in articles that are not required to be packaged according to the requirements of this subchapter.

(4) Cylinders, except for those which are required to be overpacked or placed in an outer packaging, in which case the overpack or outer packaging must be marked with the air eligibility marking; and

(5) Packages or articles which are excepted from the marking requirements of this subchapter (for example, non-spillable batteries, vehicles); and

(d) *Prohibited display*. The air eligibility marking may not appear on a package containing a hazardous material which does not meet the requirements of this subchapter for air transport.

■ 18. In § 172.411, the section heading and paragraphs (b) and (d) are revised, and new paragraphs (e) and (f) are added to read as follows:

§ 172.411 EXPLOSIVE 1.1, 1.2, 1.3, 1.4, 1.5 and 1.6 labels, and EXPLOSIVE Subsidiary label.

* * * * *

(b) In addition to complying with § 172.407, the background color on the EXPLOSIVE 1.1, EXPLOSIVE 1.2 and EXPLOSIVE 1.3 labels must be orange. The ''**'' must be replaced with the appropriate division number and compatibility group letter. The compatibility group letter must be the same size as the division number and must be shown as a capitalized Roman letter.

* * * * *

(d) In addition to complying with § 172.407, the background color on the EXPLOSIVE 1.4, EXPLOSIVE 1.5 and EXPLOSIVE 1.6 label must be orange. The ''*'' must be replaced with the appropriate compatibility group. The compatibility group letter must be shown as a capitalized Roman letter. Division numbers must measure at least 30 mm (1.2 inches) in height and at least 5 mm (0.2 inches) in width.

(e) An EXPLOSIVE subsidiary label is required for materials identified in Column (6) of the HMT as having an explosive subsidiary hazard. The division number or compability group letter may be displayed on the subsidiary hazard label. Except for size and color, the EXPLOSIVE subsidiary label must be as follows:

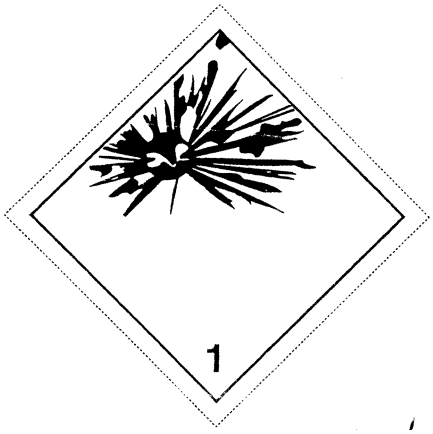

(f) The EXPLOSIVE subsidiary label must comply with § 172.407.

■ 19. In § 172.504, paragraph (g) introductory text is revised to read as follows:

§ 172.504 General placarding requirements.

* * * * *

(g) For shipments of Class 1 (explosive materials) by aircraft or vessel, the applicable compatibility group letter must be displayed on the placards, or labels when applicable, required by this section. When more than one compatibility group placard is required for Class 1 materials, only one placard is required to be displayed, as provided in paragraphs (g)(1) through (g)(4) of this section. For the purposes of paragraphs (g)(1) through (g)(4), there is a distinction between the phrases *explosive articles* and *explosive substances*. *Explosive article* means an article containing an explosive substance; examples include a detonator, flare, primer or fuse. *Explosive substance* means a substance contained in a packaging that is not contained in an article; examples include black powder and smokeless powder.

* * * * *

PART 173—SHIPPERS—GENERAL REQUIREMENTS FOR SHIPMENTS AND PACKAGINGS

■ 20. The authority citation for part 173 continues to read as follows:

Authority: 49 U.S.C. 5101–5127, 44701; 49 CFR 1.53.

■ 21. In § 173.2a, in the paragraph (b) Precedence of Hazard Table, the title of the table and the first three entries in Precedence of Hazard Table are revised to read as follows:

§ 173.2a Classification of a material having more than one hazard.

* * * * *

(b) * * *

PRECEDENCE OF HAZARD TABLE

[Hazard class or division and packing group]

	4.2	4.3	5.1 I[1]	5.1 II[1]	5.1 III[1]	6.1, I dermal	6.1, I oral	6.1 II	6.1 III	8, I liquid	8, I solid	8, II liquid	8.1 II solid	8, III liquid	8, III, solid
3 I[2]	.....	4.3	.....	.....	.....	3	3	3	3	3	(3)	3	(3)	3	(3)
3 II[2]	.....	4.3	.....	.....	.....	3	3	3	3	8	(3)	3	(3)	3	(3)
3 III[2]	.....	4.3	.....	.....	.....	6.1	6.1	6.1	3[4]	8	(3)	8	(3)	3	(3)

* * * * * * *

[2] Materials of Division 4.1 other than self-reactive substances and solid desensitized explosives, and materials of Class 3 other than liquid desensitized explosives.

[3] Denotes an impossible combination.

[4] For pesticides only, where a material has the hazards of Class 3, Packing Group III, and Division 6.1, Packing Group III, the primary hazard is Division 6.1, Packing Group III.

* * * * * * *

■ 22. In § 173.21, paragraph (f)(3)(ii) is revised to read as follows:

§ 173.21 Forbidden materials and packages.

* * * * *

(f) * * *

(3) * * *

(ii) For transportation by vessel, shipments are authorized in accordance with the control temperature requirements in Chapter 7.7 of the IMDG Code (incorporated by reference; see § 171.7 of this subchapter).

* * * * *

■ 23. In § 173.22, paragraph (a)(4) is revised to read as follows:

§ 173.22 Shipper's responsibility.

(a) * * *

(4) For a DOT Specification or UN standard packaging subject to the requirements of part 178 of this subchapter, a person must perform all functions necessary to bring the package into compliance with parts 173 and 178 of this subchapter, as identified by the packaging manufacturer or subsequent distributor (for example, applying closures consistent with the manufacturer's closure instructions) in accordance with § 178.2 of this subchapter.

* * * * *

■ 24. In § 173.24, paragraphs (b) and (f) are revised to read as follows:

§ 173.24 General requirements for packagings and packages.

* * * * *

(b) Each package used for the shipment of hazardous materials under this subchapter shall be designed, constructed, maintained, filled, its contents so limited, and closed, so that under conditions normally incident to transportation—

(1) Except as otherwise provided in this subchapter, there will be no identifiable (without the use of instruments) release of hazardous materials to the environment;

(2) The effectiveness of the package will not be substantially reduced; for example, impact resistance, strength, packaging compatibility, etc. must be maintained for the minimum and maximum temperatures, changes in humidity and pressure, and shocks, loadings and vibrations, normally encountered during transportation;

(3) There will be no mixture of gases or vapors in the package which could, through any credible spontaneous increase of heat or pressure, significantly reduce the effectiveness of the packaging;

(4) There will be no hazardous material residue adhering to the outside of the package during transport.

* * * * *

(f) Closures. (1) Closures on packagings shall be so designed and closed that under conditions (including the effects of temperature, pressure and vibration) normally incident to transportation—

(i) Except as provided in paragraph (g) of this section, there is no identifiable release of hazardous materials to the environment from the opening to which the closure is applied; and

(ii) The closure is leakproof and secured against loosening. For air transport, stoppers, corks or other such friction closures must be held in place by positive means.

(2) Except as otherwise provided in this subchapter, a closure (including gaskets or other closure components, if any) used on a specification packaging must conform to all applicable requirements of the specification and must be closed in accordance with information, as applicable, provided by the manufacturer's notification required by § 178.2 of this subchapter.

* * * * *

■ 25. In 173.25, paragraph (a)(2) is revised to read as follows:

§ 173.25 Authorized packagings and overpacks.

(a) * * *

(2) The overpack is marked with the proper shipping name and identification number, the air eligibility marking, when applicable, and is labeled as required by this subchapter for each hazardous material contained therein, unless markings and labels representative of each hazardous material in the overpack are visible.

* * * * *

■ 26. In § 173.27, paragraph (e) is revised, and a new paragraph (i) is added to read as follows:

§ 173.27 General requirements for transportation by aircraft.

* * * * *

(e) Absorbent materials. Except as otherwise provided in this subchapter, liquid hazardous materials of Class 3, 4, or 8, or Division 5.1, 5.2 or 6.1 that are packaged and offered for transport in glass, earthenware, plastic or metal inner packagings must be packaged using absorbent material as follows:

(1) Packing Group I liquids on passenger aircraft must be packaged using materials capable of absorbing the entire contents of the inner packagings.

(2) Packing Group I liquids on cargo aircraft, and Packing Group II liquids including Division 5.2 liquids on passenger and cargo aircraft, must be packaged using a sufficient quantity of absorbent material to absorb the entire contents of any one of the inner packagings containing such liquids. When the inner packagings are of different sizes and quantities, sufficient absorbent material must be used to absorb the entire contents of the inner packaging with the greatest volume of liquid.

(3) When absorbent materials are required and the outer packaging is not liquid tight, a means of containing the liquid in the event of a leakage must be provided in the form of a leakproof liner, plastic bag or other equally efficient means of containment.

(4) Absorbent material must not react dangerously with the liquid (see §§ 173.24 and 173.24a.).

(5) Absorbent material is not required if the inner packagings are so protected that they are unlikely to break and leak their contents from the outer packaging under normal conditions of transportation.

* * * * *

(i) Air eligibility marking. Each person who offers for transportation a hazardous material by aircraft must mark the packages containing the hazardous materials with an air eligibility mark as specified in § 172.321 of this subchapter.

■ 27. In § 173.62, the following changes are made:

■ a. In paragraph (b), in the Explosives Table, a new entry is added in appropriate numerical order; and

■ b. In paragraph (c), in the Table of Packing Methods, in the first column, for the packing instruction entry 112(b), in the last sentence, the wording ''3. For UN 0222 and UN 0223'' is removed and ''3. For UN 0222'' is added in its place.

■ The new entry to be added to the paragraph (b) Explosives Table reads as follows:

§ 173.62 Specific packaging requirements for explosives.

* * * * *

(b) * * *

EXPLOSIVES TABLE

ID No.	PI
* * * * *	
UN0503	135
* * * * *	

* * * * *

■ 28. In § 173.115, paragraphs (d) and (e) are revised to read as follows:

§ 173.115 Class 2, Divisions 2.1, 2.2, and 2.3—Definitions.

* * * * *

(d) *Non-liquefied compressed gas.* A gas, which when packaged under pressure for transportation is entirely gaseous at −50 °C (−58 °F) with a critical temperature less than or equal to −50 °C (−58 °F), is considered to be a non-liquefied compressed gas.

(e) *Liquefied compressed gas.* A gas, which when packaged under pressure for transportation is partially liquid at temperatures above −50 °C (−58 °F), is considered to be a liquefied compressed gas. A liquefied compressed gas is further categorized as follows:

(1) *High pressure liquefied gas* which is a gas with a critical temperature between −50 °C (−58 °F) and + 65 °C (149 °F), and

(2) *Low pressure liquefied gas* which is a gas with a critical temperature above + 65 °C (149 °F).

* * * * *

■ 29. In § 173.152, paragraphs (b)(2) and (b)(4)(ii) are revised to read as follows:

§ 173.152 Exceptions for Division 5.1 (oxidizers) and Division 5.2 (organic peroxides).

* * * * *

(b) * * *

(2) For oxidizers in Packing Group III, inner packagings not over 5 L (1.3 gallons) net capacity each for liquids or not over 5.0 kg (11 lbs) net capacity each for solids, and packed in strong outer packagings.

* * * * *

(4) * * *

(ii) The flammable liquid component must be packed in inner packagings not over 5 L (1.3 gallons) net capacity each for Packing Group II or III liquid; and

* * * * *

■ 30. In § 173.153, in paragraph (b) introductory text, a new first sentence is added, and paragraph (b)(1) is revised to read as follows:

§ 173.153 Exceptions for Division 6.1 (poisonous materials).

* * * * *

(b) *Limited quantities of Division 6.1 materials.* The exceptions in this paragraph do not apply to poison-by-inhalation materials. * * *

(1) For poisonous liquids in Packing Group III, inner packagings not over 5 L (1.3 gallons) net capacity each, packed in strong outer packagings; and

* * * * *

■ 31. In § 173.154, paragraph (b)(2) is revised to read as follows:

§ 173.154 Exceptions for Class 8 (corrosive materials).

* * * * *

(b) * * *

(2) For corrosive materials in Packing Group III, in inner packagings not over 5.0 L (1.3 gallons) net capacity each for liquids, or not over 5.0 kg (11 lbs) net capacity each for solids, and packed in strong outer packagings.

* * * * *

■ 32. In § 173.159, in paragraph (a), a second sentence is added, and a new paragraph (d)(4) is added to read as follows:

§ 173.159 Batteries, wet.

(a) * * * For transportation by aircraft, the packaging for wet cell batteries must incorporate an acid-or alkali-proof liner, or include a supplementary packaging with sufficient strength and adequately sealed to prevent leakage of electrolyte fluid in the event of spillage.

* * * * *

(d) * * *

(4) At a temperature of 55 °C (131 °F), the battery must not contain any unabsorbed free-flowing liquid, and must be designed so that electrolyte will not flow from a ruptured or cracked case.

* * * * *

■ 33. Section 173.161 is revised to read as follows:

§ 173.161 Chemical kits and first aid kits.

(a) Chemical kits and First aid kits must conform to the following requirements:

(1) The kits may only contain hazardous materials for which packaging exceptions are provided in column 8(A) the § 172.101 Table of this subchapter.

(2) The kits must be packed in a strong outer packaging conforming to the packaging requirements of subpart B of this subchapter.

(3) The kits must include sufficient absorbent material to completely absorb the contents of any liquid hazardous materials contained in the kits. The contents must be separated, placed, or packed, and closed with cushioning material to protect them from damage.

(4) The contents of the kits must be packed so there will be no possibility of the mixture of contents causing dangerous evolution of heat or gas.

(5) The packing group assigned to the kits as a whole must be the most stringent packing group assigned to any individual substance contained in the kits.

(6) Inner receptacles containing hazardous materials within the kits must not contain more than 250 ml for liquids or 250 g for solids per receptacle.

(7) The total quantity of hazardous materials in any one outer package must not exceed either 10 L or 10 kg.

(b) Chemical kits and First aid kits are excepted from the specification packaging requirements of this subchapter. Chemical kits and First aid kits are also excepted from the labeling requirements of this subchapter except when offered for transportation or transported by air. In addition, Chemical kits and First aid kits are not subject to subpart F of part 172 of this subchapter (Placarding), part 174 (Carriage by rail) of this subchapter except § 174.24 (Shipping papers), and part 177 (Carriage by highway) of this subchapter except § 177.817 (Shipping

papers). Kits that meet the definition for a consumer commodity in § 171.8 of this subchapter may be transported in accordance with the exceptions for ORM materials in § 173.156.

■ 34. In § 173.166, paragraphs (b), (c), (d)(2), (e) introductory text and (f) are revised; paragraph (d)(3) is redesignated as paragraph (d)(4) and revised; and new paragraphs (d)(3), (d)(5), and (e)(5) are added to read as follows:

§ 173.166 Air bag inflators, air bag modules and seat-belt pretensioners.

* * * * *

(b) *Classification.* An air bag inflator, air bag module, or seat-belt pretensioner may be classed as Class 9 (UN3268) if:

(1) The manufacturer has submitted each design type air bag inflator, air bag module, or seat-belt pretensioner to a person approved by the Associate Administrator, in accordance with § 173.56(b), for examination and testing. The submission must contain a detailed description of the inflator or pretensioner or, if more than a single inflator or pretensioner is involved, the maximum parameters of each particular inflator or pretensioner design type for which approval is sought and details on the complete package. The manufacturer must submit an application, including the test results and report recommending the shipping description and classification for each device or design type to the Associate Administrator, and must receive written notification from the Associate Administrator that the device has been approved for transportation and assigned an EX number; or,

(2) The manufacturer has submitted an application, including a classification issued by the competent authority of a foreign government to the Associate Administrator, and received written notification from the Associate Administrator that the device has been approved for transportation and assigned an EX number.

(c) *EX numbers.* When offered for transportation, the shipping paper must contain the EX number or product code for each approved inflator, module or pretensioner in association with the basic description required by § 172.202(a) of this subchapter. Product codes must be traceable to the specific EX number assigned to the inflator, module or pretensioner by the Associate Administrator. The EX number or product code is not required to be marked on the outside package.

(d) * * *

(2) An air bag module containing an inflator that has been previously approved for transportation is not required to be submitted for further examination or approval.

(3) An air bag module containing an inflator that has previously been approved as a Division 2.2 material is not required to be submitted for further examination to be reclassed as a Class 9 material.

(4) *Shipments for recycling.* When offered for domestic transportation by highway, rail freight, cargo vessel or cargo aircraft, a serviceable air bag module or seat-belt pretensioner removed from a motor vehicle that was manufactured as required for use in the United States may be offered for transportation and transported without compliance with the shipping paper requirement prescribed in paragraph (c) of this section. However, the word ''Recycled'' must be entered on the shipping paper immediately after the basic description prescribed in § 172.202 of this subchapter. No more than one device is authorized in the packaging prescribed in paragraph (e)(1), (2) or (3) of this section. The device must be cushioned and secured within the package to prevent movement during transportation.

(5) Until October 1, 2005, approved ''Air bag inflators, compressed gas, *or* Air bag modules, compressed gas *or* Seat-belt pretensioners, compressed gas,'' UN3353, packaged in a non-specification packaging before October 1, 2003, may be transported or offered for domestic transportation when described, marked, and labeled as a Division 2.2 material in accordance with the HMR in effect on September 30, 2003.

(e) *Packagings.* Rigid, outer packagings, meeting the general packaging requirements of part 173, and the packaging specification and performance requirements of part 178 of this subchapter at the Packing Group III performance level are authorized. The packagings must be designed and constructed to prevent movement of the articles and inadvertent operation.

* * * * *

(5) Packagings specified in the approval document issued by the Associate Administrator in accordance with paragraph (e) of this section are also authorized.

(f) *Labeling.* Notwithstanding the provisions of § 172.402 of this subchapter, each package or handling device must display a CLASS 9 label. Additional labeling is not required when the package contains no hazardous materials other than the devices.

■ 35. In § 173.185, paragraph (e)(4) is revised, paragraph (e)(5) is removed and reserved, paragraph (e)(7) is revised, and a new paragraph (k) is added to read as follows:

§ 173.185 Lithium batteries and cells.

* * * * *

(e) * * *

(4) Authorized outer packagings: rigid outer packagings that conform to the general packaging requirements of part 173 and the packaging specification and performance requirements of part 178 of this subchapter at the Packing Group II performance level. Cells and batteries must be packed in such a manner as to effectively prevent short circuits through the use of inner packagings, dividers, or other suitable means.

(5) [Reserved]

* * * * *

(7) Except as provided in paragraph (h) of this section, cells and batteries with a liquid cathode containing sulfur dioxide, sulfuryl chloride or thionyl chloride may not be offered for transportation or transported if any cell has been discharged to the extent that the open circuit voltage is less than two volts, or is less than two-thirds of the voltage of the fully charged cell, whichever is less.

* * * * *

(k) Batteries employing a strong, impact-resistant outer casing and exceeding a gross mass of 12 kg (26.5 lbs.), and assemblies of such batteries, may be packed in strong outer packagings, in protective enclosures (for example, in fully enclosed wooden slatted crates) or on pallets. Batteries must be secured to prevent inadvertent movement, and the terminals may not support the weight of other superimposed elements. Batteries packaged in this manner may only be transported by cargo aircraft and must be approved by the Associate Administrator.

§ 173.216 [Amended]

■ 36. In § 173.216, paragraph (b) is removed and reserved.

■ 37. In § 173.218, paragraph (a) introductory text is revised and paragraph (b) is removed and reserved to read as follows:

§ 173.218 Fish meal or fish scrap.

(a) Except as provided in Column (7) of the HMT in § 172.101 of this subchapter, fish meal or fish scrap, containing at least 6%, but not more than 12% water, is authorized for transportation by vessel only when packaged as follows:

* * * * *

(b) [Reserved]

* * * * *

■ 38. In § 173.220, paragraph (a)(2) is revised; in paragraph (c), the first sentence is revised; paragraph (e) is redesignated as paragraph (f); and a new paragraph (e) is added to read as follows:

§ 173.220 Internal combustion engines, self-propelled vehicles, mechanical equipment containing internal combustion engines, and battery powered vehicles or equipment.

(a) * * *

(2) It is equipped with a wet electric storage battery other than a non-spillable battery, or with a sodium or lithium battery; or

* * * * *

(c) *Battery powered or installed.* Batteries must be securely installed, and wet batteries fastened in an upright position. * * *

* * * * *

(e) *Additional requirements for internal combustion engines and vehicles with certain electronic equipment when transported by aircraft or vessel.* When an internal combustion engine that is not installed in a vehicle or equipment is offered for transportation by aircraft or vessel, all fuel, coolant or hydraulic systems remaining in the engine must be drained as far as practicable, and all disconnected fluid pipes that previously contained fluid must be sealed with leak-proof caps that are positively retained. When offered for transportation by aircraft, vehicles equipped with theft-protection devices, installed radio communications equipment or navigational systems must have such devices, equipment or systems disabled.

* * * * *

■ 39. A new § 173.223 is added to read as follows:

§ 173.223 Musk xylene.

(a) Packagings for ''Musk xylene'' or ''5-tert-Butyl-2,4,6-trinitro-m-xylene,'' when offered for transportation or transported by rail, highway, or vessel, must conform to the general packaging requirements of subpart B of part 173, and to the requirements of part 178 of this subchapter at the Packing Group III performance level and may only be transported in the following packagings:

(1) Fiberboard box (4G) with a single inner plastic bag, and a maximum net mass of not more than 50 kg (110 lbs).

(2) Fiberboard box (4G) or fiber drum (1G), with a plastic inner packaging not exceeding 5 kg (11 lbs), and a maximum net mass of not more than 25 kg (55 lbs).

(3) Fiber drum (1G), and a maximum net mass of not more than 50 kg (110 lbs), that may be fitted with a coating or lining.

(b) [Reserved]

■ 40. In § 173.224, in paragraph (b)(4), the fourth sentence is revised; in the table following paragraph (b)(7), 5 entries are removed, 9 entries are added, and 1 entry is revised in appropriate alphabetical order; and in the ''NOTES'' immediately following the Table, a new Note ''4'' is added in appropriate numerical order to read as follows:

§ 173.224 Packaging and control and emergency temperatures for self-reactive materials.

* * * * *

(b) * * *

(4) * * * Bulk packagings are authorized as specified in § 173.225(e) for Type F self-reactive substances. * * *

* * * * *

(7) * * *

SELF-REACTIVE MATERIALS TABLE

Self-reactive substance (1)	Identification No. (2)	Concentration (%) (3)	Packing method (4)	Control temperature (°C) (5)	Emergency temperature (6)	Notes (7)
* * *	*	*		*	*	
[REMOVE:]						
Benzene-1,3-disulphohydrazide, as a paste	3226	52	OP7			
Benzene sulphohydrazide	3226	100	OP7			
2-Diazo-1-Naphthol-4-sulphochloride	3222	100	OP5			
2-Diazo-1-Naphthol-5-sulphochloride	3222	100	OP5			
Diphenyloxide-4,4'-disulphohydrazide	3226	100	OP7			
[ADD:]						
* * *	*	*		*	*	
Benzene-1,3-disulphonylhydrazide, as a paste	3226	52	OP7			
Benzene sulphohydrazide	3226	100	OP7			
* * *	*	*		*	*	
2-Diazo-1-Naphthol sulphonic acid ester mixture	3226	<100	OP7			4
2-Diazo-1-Naphthol-4-sulphonyl chloride	3222	100	OP5			
2-Diazo-1-Naphthol-5-sulphonyl chloride	3222	100	OP5			
2,5-Dibutoxy-4-(4-morpholinyl)-Benzenediazonium, tetrachlorozincate (2:1)	3228	100	OP8			
* * *	*	*		*	*	
2,5-Diethoxy-4-(4-morpholinyl)-benzenediazonium sulphate	3226	100	OP7			
* * *	*	*		*	*	
4-(Dimethylamino)-benzenediazonium trichlorozincate (-1)	3228	100	OP8			
* * *	*	*		*	*	
Diphenyloxide-4,4'-disulphonylhydrazide	3226	100	OP7			
* * *	*	*		*	*	
[REVISE:]						
2,2'-Azodi(isobutyronitrile) as a water based paste	3224	≤50	OP6			

* * * * *

Notes:

* * * * *

4. This entry applies to mixtures of esters of 2-diazo-1-naphthol-4-sulphonic acid and 2-diazo-1-naphthol-5-sulphonic acid.

■ 41. In § 173.225, paragraph (b)(6) is revised; in the Organic Peroxide Table, 1 entry is removed, 9 entries are added, and 21 entries are revised in appropriate alphabetical order; in the ''Notes'' immediately following the Table, Note ''9'' is revised, and two new notes, ''27'' and ''28'' are added in appropriate numerical order; in paragraph (e)(3)(xii), the last sentence is revised; and paragraph (e)(5) is revised to read as follows:

§ 173.225 Packaging requirements and other provisions for organic peroxides.

* * * * *

(b) * * *

(6) *Packing method.* Column 6 specifies the highest packing method (largest packaging capacity) authorized for the organic peroxide. Lower numbered packing methods (smaller packaging capacities) are also authorized. For example, if OP3 is specified, then OP2 and OP1 are also authorized. The designation ''IBC'' means Special Provision IB52 in § 172.102 of this subchapter applies. The designation ''Bulk'' means paragraph (e) of this section applies. When an IBC or bulk packaging is authorized and meets the requirements of paragraph (e) of this section, lower control temperatures than those specified for non-bulk packagings may be required. The Table of Packing Methods in paragraph (d) of this section defines the non-bulk packing methods.

* * * * *

(8) * * *

ORGANIC PEROXIDE TABLE

Technical name	ID No.	Concentration (mass %)	Diluent (mass %)			Water (mass %)	Packing method	Temperature (°C)		Notes
			A	B	I			Control	Emergency	
(1)	(2)	(3)	(4a)	(4b)	(4c)	(5)	(6)	(7a)	(7b)	(8)
* * * * *										
[REMOVE:]										
Peracetic acid with not more than 20% hydrogen peroxide.	.....	.....	.....	.....	.....	.....	.....	.....	.....	
* * * * *										
[ADD:]										
* * * * *										
tert-Butyl peroxyneodecanoate [as a stable dispersion in water].	UN3119	≤42	.....	.....	.....	.....	OP8, IBC	−5	+5	
* * * * *										
Di-tert-butyl peroxide	UN3109	≤32	≥68	.....	.....	.....	Bulk	.....	.....	14
* * * * *										
Diisopropyl peroxydicarbonate	UN3115	≤28	≥72	.....	.....	.....	OP7	−15	−5	
* * * * *										
Di-n-Propyl peroxydicarbonate	UN3113	≤100	.....	.....	.....	.....	OP3	−25	−15	
* * * * *										
Di-(3,5,5-trimethylhexanoyl) peroxide	UN3119	≤38	≥62	.....	.....	.....	Bulk	−5	+5	14
* * * * *										
Peroxyacetic acid *with not more than 20% hydrogen peroxide*.	Exempt ..	≤6	.....	.....	.....	≥60	Exempt	.....	.....	28
Peroxyacetic acid *with not more than 26% hydrogen peroxide*.	UN3109	≤17	.....	.....	.....	.....	OP8, IBC	.....	.....	13, 20, 28
Peroxyacetic acid *with 7% hydrogen peroxide*.	UN3107	≤36	.....	.....	.....	≥15	OP8	.....	.....	13, 20, 28
* * * * *										
Peroxyacetic acid, distilled, Type F, stabilized.	UN3119	≤41	.....	.....	.....	.....	Bulk	+30	+35	14, 27, 28
* * * * *										
[REVISE:]										
* * * * *										
tert-Butyl hydroperoxide	UN3109	≤72	.....	.....	.....	≥28	OP8, IBC, Bulk	.....	.....	13, 14
* * * * *										
tert-Butyl peroxyacetate	UN3109	≤32	≥68	.....	.....	.....	OP8, IBC	.....	.....	
* * * * *										
tert-Butyl peroxyacetate	UN3109	≤32	.....	≥68	.....	.....	OP8	.....	.....	
* * * * *										
tert-Butyl peroxyneodecanoate [as a stable dispersion in water].	UN3117	≤52	.....	.....	.....	.....	OP8, IBC	0	+10	
* * * * *										
tert-Butyl peroxyneodecanoate	UN3119	≤32	≥68	.....	.....	.....	OP8, IBC	0	+10	
* * * * *										
tert-Butyl peroxy-3,5,5- trimethylhexanoate	UN3109	≤32	≥68	.....	.....	.....	OP8, IBC	.....	.....	

ORGANIC PEROXIDE TABLE—Continued

Technical name	ID No.	Concentration (mass %)	Diluent (mass %)			Water (mass %)	Packing method	Temperature (°C)		Notes
			A	B	I			Control	Emergency	
(1)	(2)	(3)	(4a)	(4b)	(4c)	(5)	(6)	(7a)	(7b)	(8)
* *		*		*			*	*	*	
Cumyl hydroperoxide	UN3109	≤90	≥10				OP8, IBC, Bulk			13, 14, 15
* *		*		*			*	*	*	
Dibenzoyl peroxide [as a stable dispersion in water].	UN3109	≤42					OP8, IBC			
* *		*		*			*	*	*	
Di-(4-tert-butylcyclothexyl) peroxydicarbonate [as stable dispersion in water].	UN3119	≤42					OP8, IBC	+30	+35	
* *		*		*			*	*	*	
Di-tert-butyl peroxide	UN3109	≤52		≥48			OP8, IBC, Bulk			14, 24
* *		*		*			*	*	*	
1,1-Di-(tert-butylperoxy) cyclohexane	UN3109	≤42	≥58				OP8, IBC			
* *		*		*			*	*	*	
Dicetyl peroxydicaronate [as a stable dispersion in water].	UN3119	≤42					OP8, IBC	+30	+35	
* *		*		*			*	*	*	
Dicumyl peroxide	UN3109	>52–100		≤48			OP8, IBC, Bulk			9, 11, 14
Dicumyl peroxide	UN3110	>52–100		≤48			OP8, IBC, Bulk			9, 11, 14
* *		*		*			*	*	*	
Dilauroyl peroxide [as a stable dispersion in water].	UN3109	≤42					OP8, IBC			
* *		*		*			*	*	*	
Di-(3,5,5-trimethylhexanoyl)peroxide [as a stable dispersion in water].	UN3119	≤52					OP8, IBC	+10	+15	
* *		*		*			*	*	*	
Isopropylcumyl hydroperoxide	UN3109	≤72	≥28				OP8, IBC, Bulk			13, 14
* *		*		*			*	*	*	
p-Menthyl hydroperoxide	UN3109	≤72	≥28				OP8, IBC, Bulk			14
* *		*		*			*	*	*	
Peroxyacetic acid, type F, stabilized	UN3109	≤43					OP8, IBC			13, 20, 28
* *		*		*			*	*	*	
Pinanyl hydroperoxide	UN3109	<56	>44				OP8, Bulk			14
* *		*		*			*	*	*	
1,1,3,3-Tetramethylbutyl peroxyneodecanoate [as a stable dispersion in water].	UN3119	≤52					OP8, IBC	−5	+5	
* *		*		*			*	*	*	

Notes:

* * * * *

9. For domestic shipments, this material may be packaged in bulk packagings under the provisions of paragraph (e)(3)(xii) of this section.

* * * * *

27. Formulations derived from distillation of peroxyacetic acid originating from peroxyacetic acid in a concentration of not more than 41% with water, total active oxygen less than or equal to 9.5% (peroxyacetic acid plus hydrogen peroxide).

28. For the purposes of this section, the names ''Peroxyacetic acid'' and ''Peracetic acid'' are synonymous.

* * * * *

(e) * * *

(3) * * *

(xii) * * * These portable tanks are not subject to any other requirements of paragraph (e) of this section.

* * * * *

(5) *IBCs.* IBCs are authorized subject to the conditions and limitations of this section if the IBC type is authorized according to Special Provision IB52 (see § 172.102(c)(4) of this subchapter), as applicable, and the IBC conforms to the requirements in subpart O of part 178 of this subchapter at the Packing Group II performance level. The additional requirements in paragraphs (e)(5)(i) and (e)(5)(ii) of this section also apply. Type F organic peroxides or self-reactive substances that are not authorized for a specific IBC may be transported in IBCs other than those specified in IB52 if approved by the Associate Administrator.

* * * * *

■ 42. In § 173.244, paragraph (c) is revised to read as follows:

§ 173.244 Bulk packaging for certain pyrophoric liquids (Division 4.2), dangerous when wet (Division 4.3) materials, and poisonous liquids with inhalation hazards (Division 6.1).

* * * * *

(c) *Portable tanks:* DOT 51 portable tanks and UN portable tanks that meet the requirements of this subchapter, when a T code is specified in Column (7) of the § 172.101 Table of this subchapter for the specific hazardous material, are authorized.

■ 43. In § 173.306, the paragraph (f) heading is revised and a new paragraph (j) is added to read as follows:

§ 173.306 Limited quantities of compressed gases.

* * * * *

(f) *Accumulators (Articles, pressurized pneumatic or hydraulic containing non-flammable gas).* * * *

* * * * *

(j) For certain compressed gases not subject to the requirements of this subchapter, see § 173.307(a)(5).

■ 44. In § 173.307, a new paragraph (a)(5) is added to read as follows:

§ 173.307 Exceptions for compressed gases.

(a) * * *

(5) *Aerosols with a capacity of less than 50 ml.* Aerosols, as defined in § 171.8 of this subchapter, with a capacity not exceeding 50 ml and with a pressure not exceeding 970 kPa (141 psig) at 55 °C (131 °F), containing no hazardous materials other than a Division 2.2 gas, are not subject to the requirements of this subchapter.

* * * * *

■ 45. In § 173.418, a new paragraph (e) is added to read as follows:

§ 173.418 Authorized packages-pyrophoric Class 7 (radioactive) materials.

* * * * *

(e) Pyrophoric Class 7 (radioactive) materials transported by aircraft must be packaged in Type B packages, as authorized in Column (8) of the § 172.101 Table of this subchapter.

■ 46. In § 173.422, paragraphs (a)(2), (a)(3), and (a()4) are revised to read as follows:

§ 173.422 Additional requirements for excepted packages containing Class 7 (radioactive materials).

(a) * * *

(2) ''This package conforms to the conditions and limitations specified in 49 CFR 173.424 for radioactive material, excepted package-instruments or articles, UN 2911'';

(3) ''This package conforms to the conditions and limitations specified in 49 CFR 173.426 for radioactive material, excepted package-articles manufactured from natural uranium or depleted uranium or natural thorium, UN 2909''; or

(4) ''This package conforms to the conditions and limitations specified in 49 CFR 173.428 for radioactive material, excepted package-empty packaging, UN 2908.''

* * * * *

PART 175—CARRIAGE BY AIRCRAFT

■ 47. The authority citation for part 175 continues to read as follows:

Authority: 49 U.S.C. 5101–5127; 49 CFR 1.53.

■ 48. In § 175.10, paragraph (a)(4)(v) is added, and paragraph (a)(25) is revised to read as follows:

§ 175.10 Exceptions.

(a) * * *

(4) * * *

(iv) * * *

(v) The provisions of this paragraph (a)(4) also apply to an aircraft operator when transporting passenger or crew member baggage to its intended destination, if the baggage has been separated from the passenger or crew member, including transfer to another carrier for transport to its intended destination.

* * * * *

(25) With approval of the aircraft operator, a passenger or crew member may carry in checked or carry-on baggage no more than two small gas cartridges containing no hazardous material other than a Division 2.2 gas that are fitted into a self-inflating life-jacket for inflation purposes, plus no more than two spare cartridges.

* * * * *

■ 49. In § 175.30, a new paragraph (a)(5) is added to read as follows:

§ 175.30 Accepting and inspecting shipments.

* * * * *

(a) * * *

(5) Marked with the air eligibility marking in accordance with § 172.321 of this subchapter, unless excepted from marking.

* * * * *

■ 50. In § 175.90, paragraphs (b) and (c) are revised to read as follows:

§ 175.90 Damaged shipments.

* * * * *

(b) Except as provided in § 175.700, the operator of an aircraft must remove from the aircraft any package, baggage or cargo that appears to be leaking or contaminated by a hazardous material. In the case of a package, baggage or cargo that appears to be leaking, the operator must ensure that other packages, baggage or cargo in the same shipment are in proper condition for transport aboard the aircraft and that no other package, baggage or cargo has been contaminated or is leaking. If an operator becomes aware that a package, baggage or cargo not identified as containing a hazardous material has been contaminated, or the operator has cause to believe that a hazardous material may be the cause of the contamination, the operator must take reasonable steps to identify the nature and source of contamination before proceeding with the loading of the contaminated baggage or cargo. If the contaminating substance is found or suspected to be a hazardous material, the operator must isolate the package, baggage or cargo and take appropriate steps to eliminate any identified hazard before continuing the transportation of the item by air.

(c) No person may place aboard an aircraft, a package, baggage or cargo that is contaminated with a hazardous material or appears to be leaking.

* * * * *

PART 176—CARRIAGE BY VESSEL

■ 51. The authority citation for part 176 continues to read as follows:

Authority: 49 U.S.C. 5101–5127; 49 CFR 1.53.

■ 52. In § 176.27, paragraph (c)(2) is revised to read as follows:

§ 176.27 Certificate.

* * * * *

(c) * * *

(2) The certification may appear on a shipping paper or on a separate document as a statement, such as ''It is declared that the packing of the container has been carried out in accordance with the applicable provisions [of 49 CFR], [of the IMDG Code], or [of 49 CFR and the IMDG Code].''.

■ 53. In § 176.63, a new paragraph (f) is added to read as follows:

§ 176.63 Stowage locations.

* * * * *

(f) *Stowage of containers on board hatchless container ships* (1) Containers holding a hazardous material may be stowed in or vertically above a hatchless container hold if the following conditions are met:

(1) All hazardous materials are permitted for *under deck* stowage as specified in the Table in § 172.101 of this subchapter; and

(2) The hatchless container hold is in full compliance with the provisions of IMO's ''International Convention for the Safety of Life at Sea (SOLAS),'' Regulation II–2/19 of SOLAS 1974, as amended (incorporation by reference; see § 171.7 of this subchapter), applicable to enclosed container cargo spaces, as appropriate for the cargo transported.

■ 54. In § 176.83, paragraph (f) is revised and a new paragraph (l) is added to read as follows:

§ 176.83 Segregation.

* * * * *

(f) *Segregation of containers on board container vessels:* (1) Except for hatchless container ships, this paragraph applies to the segregation of freight containers that are carried on board container vessels, or on other types of vessels, provided these cargo spaces are properly fitted for permanent stowage of freight containers during transport.

(l) *Segregation of containers on board hatchless container ships:* (1) This paragraph applies to the segregation of containers that are transported on board hatchless container ships provided that the cargo spaces are properly fitted to give permanent stowage of the cargo transport units during transport.

(2) For partly hatchless container ships that have spaces suitable for breakbulk cargo, conventional container stowage, or any other method of stowage, the appropriate requirements of this section apply to the relevant cargo space.

(3) *Segregation Table:* Table § 176.83(l)(3) sets forth the general requirements for segregation of containers on board hatchless container vessels.

(4) In Table § 176.83(l)(3), a container space means a distance of not less than 6 m (20 feet) fore and aft or not less than 2.5 m (8 feet) athwartship.

BILLING CODE 4910–60–P

TABLE 176.83(I) - SEGREGATION OF CONTAINERS ON BOARD HATCHLESS CONTAINER SHIPS

SEGREGATION REQUIREMENT	VERTICAL			HORIZONTAL						
	CLOSED VERSUS CLOSED	CLOSED VERSUS OPEN	OPEN VERSUS OPEN		CLOSED VERSUS CLOSED		CLOSED VERSUS OPEN		OPEN VERSUS OPEN	
					ON DECK	UNDER DECK	ON DECK	UNDER DECK	ON DECK	UNDER DECK
"AWAY FROM" 1.	ONE ON TOP OF THE OTHER PERMITTED	OPEN ON TOP OF CLOSED PERMITTED OTHERWISE AS FOR "OPEN VERSUS OPEN"	NOT IN THE SAME VERTICAL LINE	FORE AND AFT	NO RESTRICTION	NO RESTRICTION	NO RESTRICTION	NO RESTRICTION	ONE CONTAINER SPACE	ONE CONTAINER SPACE OR ONE BULKHEAD
				ATHWART-SHIPS	NO RESTRICTION	NO RESTRICTION	NO RESTRICTION	NO RESTRICTION	ONE CONTAINER SPACE	ONE CONTAINER SPACE
"SEPARATED FROM" 2.	NOT IN THE SAME VERTICAL LINE	AS FOR "OPEN VERSUS OPEN"		FORE AND AFT	ONE CONTAINER SPACE	ONE CONTAINER SPACE OR ONE BULKHEAD	ONE CONTAINER SPACE	ONE CONTAINER SPACE OR ONE BULKHEAD	ONE CONTAINER SPACE AND NOT IN OR ABOVE SAME HOLD	ONE BULKHEAD
				ATHWART-SHIPS	ONE CONTAINER SPACE	ONE CONTAINER SPACE	TWO CONTAINER SPACES	TWO CONTAINER SPACES	TWO CONTAINER SPACES AND NOT IN OR ABOVE SAME HOLD	ONE BULKHEAD
"SEPARATED BY A COMPLETE COMPARTMENT OR HOLD FROM" 3.				FORE AND AFT	ONE CONTAINER SPACE AND NOT IN OR ABOVE SAME HOLD	ONE BULKHEAD	ONE CONTAINER SPACE AND NOT IN OR ABOVE SAME HOLD	ONE BULKHEAD	TWO CONTAINER SPACES AND NOT IN OR ABOVE SAME HOLD	TWO BULKHEADS
				ATHWART-SHIPS	TWO CONTAINER SPACES AND NOT ABOVE SAME HOLD	ONE BULKHEAD	TWO CONTAINER SPACES AND NOT ABOVE SAME HOLD	ONE BULKHEAD	THREE CONTAINER SPACES AND NOT ABOVE SAME HOLD	TWO BULKHEADS
"SEPARATED LONGITUDINALLY BY AN INTERVENING COMPLETE COMPARTMENT OR HOLD FROM" 4.	PROHIBITED			FORE AND AFT	MINIMUM HORIZONTAL DISTANCE OF 24 M AND NOT IN OR ABOVE SAME HOLD	ONE BULKHEAD AND MINIMUM HORIZONTAL DISTANCE OF 24 M*	MINIMUM HORIZONTAL DISTANCE OF 24 M AND NOT ABOVE SAME HOLD	TWO BULKHEADS	MINIMUM HORIZONTAL DISTANCE OF 24 M AND NOT ABOVE SAME HOLD	TWO BULKHEADS
				ATHWART-SHIPS	PROHIBITED	PROHIBITED	PROHIBITED	PROHIBITED	PROHIBITED	PROHIBITED

* Containers not less than 6 m (20 feet) from intervening bulkhead.
Note: All bulkheads and decks must be resistant to fire and liquid.

BILLING CODE 4910–60–C

■ 55. In § 176.84, in paragraph (b), Table of provisions, nine new entries are added in appropriate numerical order to read as follows:

§ 176.84 Other requirements for stowage and segregation for cargo vessels and passenger vessels.

* * * * *

(b) * * *

Code	Provisions
*	* * * * * *
124	Stow ''separated from'' bromates.
125	Segregation same as for flammable liquids, but also ''away from'' flammable solids.
126	Segregation same as for Class 9, miscellaneous hazardous materials.
127	For packages carrying a subsidiary risk of Class 1 (explosives), segregation same as for Class 1, Division 1.3.
128	Stow in accordance with the IMDG Code, Sub-section 7.1.10.3 (incorporated by reference; see § 171.7 of this subchapter).
129	Stowage Category A applies, except for uranyl nitrate hexahydrate solution for which Category D applies.
130	Stowage Category A applies, except for uranyl nitrate hexahydrate solution, uranium metal hexahydrate solution, uranium metal pyrophoric and thorium metal pyrophoric for which Category D applies.
131	Stowage Category A applies, except for uranyl nitrate hexahydrate solution, uranium metal pyrophoric and thorium metal pyrophoric for which Category D applies, and taking into account any supplementary requirements specified in the transport documents.
132	Stowage A applies, taking into account any supplementary requirements specified in the transport documents.
*	* * * * * *

* * * * *

■ 56. In § 176.140, in paragraph (b), the first sentence is revised to read as follows:

§ 176.140 Segregation from other classes of hazardous materials.

* * * * *

(b) Class 1 (explosive) materials must be segregated from bulk solid dangerous cargoes in accordance with the IMDG Code (incorporated by reference; see § 171.7 of this subchapter).* * *

§ 176.170 [Removed and Reserved]

■ 57. In § 176.170, paragraph (b) is removed and reserved.

■ 58. In § 176.410, paragraph (a)(2) is revised; paragraphs (a)(3), (a)(5) and (a)(6) are removed; and current paragraph (a)(4) is redesignated (a)(3) to read as follows:

§ 176.410 Division 1.5 materials, ammonium nitrate and ammonium nitrate mixtures.

(a) * * *

(2) Ammonium nitrate, Division 5.1 (oxidizer), UN1942.

* * * * *

■ 59. In § 176.415, paragraphs (a) introductory text, (a)(1), (a)(2), (b)(1), (c)(1) and (c)(2) are revised; paragraphs (b)(3), (b)(4) and (c)(5) are removed; and paragraphs (b)(5) and (b)(6) are redesignated (b)(3) and (b)(4), respectively to read as follows:

§ 176.415 Permit requirements for Division 1.5, ammonium nitrates, and certain ammonium nitrate fertilizers.

(a) Except as provided in paragraph (b) of this section, before any of the following material is loaded on or unloaded from a vessel at any waterfront facility, the owner/operator must obtain written permission from the Captain of the Port (COTP).

(1) Ammonium nitrate UN1942, ammonium nitrate fertilizers containing more than 70% ammonium nitrate, or Division 1.5 compatibility group D materials packaged in a paper bag, burlap bag, or other nonrigid combustible packaging, or any rigid packaging with combustible inside packagings,

(2) Any other ammonium nitrate or ammonium nitrate fertilizer not listed in § 176.410(a) or (b).

(b) * * *

(1) Ammonium nitrate, Division 5.1 (oxidizer) UN1942, in a rigid packaging with a noncombustible inside packaging.

* * * * *

(c) * * *

(1) If the material is Explosives, blasting, type E, Division 1.5 compatibility group D, UN0332 in a combustible packaging or in a rigid packaging with a combustible inside packaging, it must be loaded or unloaded at a facility remote from populous areas, or high-value or high-hazard industrial facilities, so that in the event of fire or explosion, loss of lives and property may be minimized;

(2) If the material is a Division 1.5 compatibility group D material in a non-rigid combustible packaging and loaded in a freight container or transport vehicle, it may be loaded or unloaded at a non-isolated facility if the facility is approved by the COTP.

* * * * *

PART 178—SPECIFICATIONS FOR PACKAGINGS

■ 60. The authority citation for part 178 continues to read as follows:

Authority: 49 U.S.C. 5101–5127; 49 CFR 1.53.

■ 61. In § 178.2, paragraph (c)(1)(ii) is revised to read as follows:

§ 178.2 Applicability and responsibility.

* * * * *

(c) * * *

(1) * * *

(ii) With information specifying the type(s) and dimensions of the closures, including gaskets and any other components needed to ensure that the packaging is capable of successfully passing the applicable performance tests and the general packaging requirements in § 173.24 and for transportation by aircraft, if applicable, § 173.27 of this subchapter. This information must include any procedures to be followed, including closure instructions for inner packagings and receptacles, to effectively assemble and close the packaging for the purpose of preventing leakage in transportation. For packagings intended for transportation by aircraft, this information must include relevant guidance to ensure that the packaging, as prepared for transportation, will withstand the pressure differential requirements in § 173.27 of this subchapter.

* * * * *

§ 178.274 [Amended]

■ 62. In § 178.274, in paragraph (j)(6), in the fourth sentence, the wording ''20 cm (8 inches) on at least two sides'' is removed and ''10 cm (4 inches) on at least two sides'' is added in its place.

■ 63. In § 178.705, paragraph (c)(1)(iv)(A) is revised to read as follows:

§ 178.705 Standards for metal IBCs.

* * * * *

(c) * * *

(1) * * *

(iv) * * *

(A) For a reference steel having a product of Rm × Ao = 10,000, where Ao

is the minimum elongation (as a percentage) of the reference steel to be used on fracture under tensile stress (Rm × Ao = 10,000 × 145; if tensile strength is in U.S. Standard units of pounds per square inch), the wall thickness must not be less than:

Capacity (C) in liters [1]	Wall thickness (T) in mm			
	Types 11A, 11B, 11N		Types 21A, 21B, 21N, 31A, 31B, 31N	
	Unprotected	Protected	Unprotected	Protected
C≤1000	2.0	1.5	2.5	2.0
1000<C≤2000	T=C/2000 + 1.5	T=C/2000 + 1.0	T=C/2000 + 2.0	T=C/2000 + 1.5
2000<C≤3000	T=C/2000 + 1.5	T=C/2000 + 1.0	T=C/1000 + 1.0	T=C/2000 + 1.5

* * * * *

■ 64. In § 178.812, paragraph (b)(1) is revised to read as follows:

§ 178.812 Top lift test.

* * * * *

(b) *Special preparation for the top lift test.* (1) Metal, rigid plastic, and composite IBC design types must be loaded to twice the maximum permissible gross mass with the load being evenly distributed.

* * * * *

PART 180—CONTINUING QUALIFICATION AND MAINTENANCE OF PACKAGINGS

■ 65. The authority citation for part 180 continues to read as follows:

Authority: 49 U.S.C. 5101–5127; 49 CFR 1.53.

■ 66. Section 180.350 is revised to read as follows:

§ 180.350 Applicability and definitions.

This subpart prescribes requirements, in addition to those contained in parts 107, 171, 172, 173 and 178 of this subchapter, applicable to any person responsible for the continuing qualification, maintenance, or periodic retesting of an IBC. The following definitions apply:

(a) *Remanufactured IBCs* are metal, rigid plastic or composite IBCs produced as a UN type from a non-UN type, or are converted from one UN design type to another UN design type. Remanufactured IBCs are subject to the same requirements of this subchapter that apply to new IBCs of the same type (also see § 178.801(c)(1) of this subchapter for design type definition).

(b) *Repaired IBCs* are metal, rigid plastic or composite IBCs that, as a result of impact or for any other cause (such as corrosion, embrittlement or other evidence of reduced strength as compared to the design type), are restored so as to conform to the design type and to be able to withstand the design type tests. For the purposes of this subchapter, the replacement of the rigid inner receptacle of a composite IBC with a receptacle conforming to the original manufacturer's specification is considered repair. Routine maintenance of IBCs (see definition in paragraph (c) of this section) is not considered repair. The bodies of rigid plastic IBCs and the inner receptacles of composite IBCs are not repairable.

(c) *Routine maintenance of IBCs* is the routine performance on metal, rigid plastic or composite IBCs of operations such as:

(1) Cleaning;

(2) Removal and reinstallation or replacement of body closures (including associated gaskets), or of service equipment conforming to the original manufacturer's specifications provided that the leaktightness of the IBC is verified; or

(3) Restoration of structural equipment not directly performing a hazardous material containment or discharge pressure retention function so as to conform to the design type (for example, the straightening of legs or lifting attachments), provided the containment function of the IBC is not affected.

■ 67. In § 180.352, paragraphs (d)(1)(i) and (f) are revised and a new paragraph (d)(1)(iv) is added to read as follows:

§ 180.352 Requirements for retest and inspection of IBCs.

* * * * *

(d) * * *

(1) * * *

(i) The repaired IBC conforms to the original design type, is capable of withstanding the applicable design qualification tests, and is retested and inspected in accordance with the applicable requirements of this section;

* * * * *

(iv) The person performing the tests and inspections after the repair must durably mark the IBC near the manufacturer's UN design type marking to show the following:

(A) The country in which the tests and inspections were performed;

(B) The name or authorized symbol of the person performing the tests and inspections; and

(C) The date (month, year) of the tests and inspections.

* * * * *

(f) *Record retention.* The owner or lessee of the IBC must keep records of periodic retests, initial and periodic inspections, and tests performed on the IBC if it has been repaired. Records must include design types and packaging specifications, test and inspection dates, name and address of test and inspection facilities, names or name of any persons conducting tests or inspections, and test or inspection specifics and results. Records must be kept for each packaging at each location where periodic tests are conducted, until such tests are successfully performed again or for at least 2.5 years from the date of the last test. These records must be made available for inspection by a representative of the Department on request.

■ 68. In § 180.605, paragraph (k) is revised to read as follows:

§ 180.605 Requirements for periodic testing, inspection and repair of portable tanks.

* * * * *

(k) *Inspection and test markings.* (1) Each IM or UN portable tank must be durably and legibly marked, in English, with the date (month and year) of the last pressure test, the identification markings of the approval agency witnessing the test, when required, and the date of the last visual inspection. The marking must be placed on or near the metal identification plate, in letters and numerals of not less than 3 mm (0.118 inches) high when on the metal identification plate, and 12 mm (0.47 inches) high when on the portable tank.

(2) Each Specification DOT 51, 56, 57 or 60 portable tank must be durably and legibly marked, in English, with the date (month and year) of the most recent

periodic retest. The marking must be placed on or near the metal certification plate and must be in accordance with § 178.3 of this subchapter. The letters and numerals must not be less than 3 mm (0.118 inches) high when on the metal certification plate, and 12 mm (0.47 inches) high when on the portable tank, except that a portable tank manufactured under a previously authorized specification may continue to be marked with smaller markings if originally authorized under that specification (for example, DOT Specification 57 portable tanks).

* * * * *

Issued in Washington, DC on July 21, 2003, under authority delegated in 49 CFR part 1.

Samuel G. Bonasso,

Acting Administrator.

[FR Doc. 03–19016 Filed 7–30–03; 8:45 am]

BILLING CODE 4910–60–P

Federal Register

Thursday,
July 31, 2003

Part III

Department of Transportation

Federal Aviation Administration

14 CFR Parts 25, 91, et al.

Improved Flammability Standards for Thermal/Acoustic Insulation Materials Used in Transport Category Airplanes; Final Rule

DEPARTMENT OF TRANSPORTATION

Federal Aviation Administration

14 CFR Parts 25, 91, 121, 125, and 135

[Docket No. FAA–2000–7909; Amdt. Nos. 25–110, 91–275, 121–289, 125–43, 135–85]

RIN 2120–AG91

Improved Flammability Standards for Thermal/Acoustic Insulation Materials Used in Transport Category Airplanes

AGENCY: Federal Aviation Administration (FAA), DOT.

ACTION: Final rule.

SUMMARY: The FAA is adopting upgraded flammability standards for thermal and acoustic insulation materials used in transport category airplanes. These standards include new flammability tests and criteria that address flame propagation and entry of an external fire into the airplane. This action is necessary because the current standards do not realistically address situations in which thermal or acoustic insulation materials may contribute to the propagation of a fire. This action is intended to enhance safety by reducing the incidence and severity of cabin fires, particularly those in inaccessible areas where thermal and acoustic insulation materials are installed, and providing additional time for evacuation by delaying the entry of post-crash fires into the cabin.

DATES: This final rule is effective on September 2, 2003.

FOR FURTHER INFORMATION CONTACT: Jeff Gardlin, FAA Airframe and Cabin Safety Branch, ANM–115, Transport Airplane Directorate, Aircraft Certification Service, 1601 Lind Avenue SW., Renton, Washington 98055–4056; telephone (425) 227–2136, facsimile (425) 227–1149, e-mail: *jeff.gardlin@faa.gov.*

SUPPLEMENTARY INFORMATION:

Availability of Rulemaking Documents

You can get an electronic copy of this final rule using the Internet by:

(1) Searching the Department of Transportation's electronic Docket Management System (DMS) Web page (*http://dms.dot.gov/search*);

(2) Visiting the Office of Rulemaking's Web page at *http://www.faa.gov/avr/arm/index.cfm*; or

(3) Accessing the **Federal Register's** Web page at *http://www.access.gpo.gov/su_docs/aces/aces140.html.*

You can also get a copy by submitting a request to the Federal Aviation Administration, Office of Rulemaking, ARM–1, 800 Independence Avenue SW., Washington, DC 20591, or by calling (202) 267–9680. Make sure to identify the amendment number or docket number of this rulemaking.

Small Business Regulatory Enforcement Fairness Act

The Small Business Regulatory Enforcement Fairness Act (SBREFA) of 1996 requires FAA to comply with small entity requests for information or advice about compliance with statutes and regulations within its jurisdiction. Therefore, any small entity that has a question regarding this document may contact their local FAA official, or the person listed under **FOR FURTHER INFORMATION CONTACT.** You can find out more about SBREFA on the Internet at our site, *http://www.faa.gov/avr/arm/sbrefa.htm.* For more information on SBREFA, e-mail us at *9-AWA-SBREFA@faa.gov.*

Background

On September 20, 2000, the FAA published a Notice of Proposed Rulemaking (NPRM) in which we proposed to adopt upgraded flammability standards for thermal and acoustic insulation materials used in transport category airplanes. See 65 FR 56992. The NPRM included the following:

- A test to measure the propensity of the insulation to spread a fire; and
- A test to measure the fire penetration resistance of the insulation.

Readers should refer to the NPRM for information about the background of this rulemaking, including descriptions of the following:

- The types of insulation materials used in airplanes;
- Other FAA regulations relating to insulation materials;
- Past incidents involving insulation materials; and
- Fire safety research activities and findings.

The background material in the NPRM also contains the basis and rationale for these requirements and, except where we have specifically expanded on the background elsewhere in this preamble, supports this final rule as if it were contained here. That is, any future discussions regarding the intent of the requirements may refer to the background in the NPRM as though it was in the final rule itself. It is therefore not necessary to repeat the background in this document.

The comment period on the NPRM extended 120 days and closed on January 18, 2001. We received comments on the NPRM from twenty-six commenters, including aircraft manufacturers, insulation manufacturers, aviation industry associations, a labor union, and individuals. None of the commenters disagree with the objectives of the proposal. Ten of the commenters expressed explicit support for the objectives of the NPRM or for the NPRM in general. We discuss specific, substantive comments in the ''Discussion of the Final Rule'' section later in this preamble.

Legal Basis for the Final Rule

The FAA's authorizing legislation gives the agency general authority to take actions necessary to carry out the law, including prescribing regulations (49 U.S.C. 40113). The FAA is responsible for promoting safety in civil aviation and, in carrying out that responsibility, has the authority to prescribe minimum standards for the design, material, and construction of aircraft, among other things (49 U.S.C. 44701).

The regulations we are adopting today are intended to enhance the safety of civil aviation by reducing the possibility that insulation materials used in airplanes will contribute to either the spread of fire within airplanes or the penetration of external fire into airplanes. This final rule requires new airplane type designs to include insulation that passes improved flammability tests. It also requires manufacturers of new airplanes that enter service after a phase-in period to equip them with insulation that passes improved flammability tests. Finally, it requires air carriers, operating under part 121, to use insulation meeting the new flame propagation requirements when they replace insulation.

The flammability tests we are adopting today will not eliminate all damage to, or losses of, airplanes by fire, nor prevent all injuries or deaths from airplanes fires. The improved tests will, however, ensure that insulation used in airplanes will resist the propagation of fire and thereby reduce the severity of fires or the speed with which fires spread. They will also ensure that insulation will delay the penetration of the airplanes by fire from outside. These effects will give flight crews additional time to safely land or taxi, as well as giving both passengers and crew more time to safely evacuate airplanes.

This final rule is focused on the goal of enhancing the safety of civil aviation. The regulations adopted today have their origin in incidents described in the NPRM where insulation that met our previous flammability standards may have contributed to airplane fires. Since we published the NPRM, there have been two more incidents where in-flight

fires occurred that involved thermal or acoustic insulation. The flammability tests and criteria adopted today represent the outcome of research conducted by our technical center in cooperation with acknowledged experts in the field. We believe these tests and criteria are the minimum necessary for future designs to provide an adequate level of civil aviation safety.

This final rule enhances safety while at the same time considering the impact on the aviation industry. For example, we are adopting regulations that become effective for existing type designs after a phase-in period. This phase-in period gives manufacturers time to plan for changes in designs, manufacturing processes, and sources of supply. The flammability test criteria we are adopting are reasonable, as shown by research and development and the availability of materials that meet the new standards. The flammability test requirements we are adopting are flexible. Both the flame propagation test and the burnthrough test requirements allow for the development and use of approved equivalent tests.

We acknowledge that this final rule has cost implications for airplane manufacturers. There are costs associated with testing, obtaining, and installing upgraded insulation. Our analysis of the costs and benefits of this final rule shows that the benefits (in the form of reduced property damage, injury, and loss of life) outweigh the costs. For more information on costs and benefits, see the ''Economic Evaluation'' section of this preamble and the Regulatory Evaluation for this final rule, which we have placed in the docket for this rulemaking. Based on our analysis of the issues involved, taking into account our responsibility for civil aviation safety, and the administrative record for this rulemaking, including the comments we received on the NPRM, this final rule is a proper and reasonable means of carrying out our responsibility to enhance civil aviation safety.

Discussion of the Final Rule

This part of the preamble describes in general terms some of the major features of the final rule. A reader who is interested in a quick overview of the final rule may find this part useful. If you are looking for a detailed description of the final rule, you should look at the section-by-section analysis, which appears later in this preamble, or the regulatory text itself, which appears at the end of this document.

This final rule requires thermal/acoustic insulation material installed in the fuselage of transport category airplanes to pass a flame propagation test. The test involves exposing samples of thermal/acoustic insulation to a radiant heat source and a propane burner flame for 15 seconds. The tested insulation must not propagate flame more than 2 inches away from the burner. The flame time after removal of the burner must not exceed 3 seconds on any specimen. See final part VI of Appendix F to Part 25 for more details.

For airplanes with a passenger capacity of 20 or greater, this final rule also requires insulation materials installed in the lower half of the airplane to pass a test of resistance to flame penetration. The test involves exposing samples of thermal/acoustic insulation blankets mounted in a test frame to a burner for four minutes. The insulation blankets must prevent flame penetration for at least four minutes and must limit the amount of heat that passes through the blanket during the test. See final part VII of Appendix F to Part 25 for more details.

This final rule requires all transport category airplanes manufactured more than two years after the effective date of this final rule to comply with the new flame propagation test. This applies to airplanes operating under parts 91, 121, 125, and 135. This means that manufacturers have two years after the effective date of the final rule to begin installing more flame resistant insulation materials in new airplanes. This final rule requires all transport category airplanes with a passenger capacity of 20 or greater manufactured more than four years after the effective date of this final rule to comply with the new test of resistance to flame penetration. This applies to airplanes operating under part 121.

Airplanes must also comply with the new flame propagation test when thermal/acoustic insulation materials installed in the fuselage are replaced more than two years after the effective date of this final rule. This requirement applies only to the materials that are replaced.

Both service history and laboratory testing demonstrate that the current flammability requirements applicable to thermal/acoustic insulation materials may not be providing the intended protection against the spread of fires. Additionally, we consider that increased protection against external fire penetrating the fuselage can be provided by proper selection of the same material. We consider that the new test methods described earlier will not only provide for increased in-flight fire safety, by reducing the flammability of thermal/acoustic insulation blankets, but will also provide increased time for evacuation during externally fed, post-crash fires by increasing fuselage burnthrough resistance.

Section-by-Section Analysis

Proposed §§ 25.853(a) and 25.855(d)

Existing § 25.853(a) requires that materials in airplane compartment interiors meet the flammability test prescribed in part I of Appendix F to Part 25. Existing § 25.855(d) requires materials used in construction of cargo or baggage compartments meet the same test. In the NPRM, we proposed to add specific exceptions to these provisions for ''thermal/acoustic insulation materials.'' The intent of this proposal was to make it clear that thermal acoustic insulation was not required to meet the requirements of Appendix F, part I, in addition to the requirements of Appendix F, parts VI and VII. However, as discussed below, this action might have confused the issue of whether or not ''small parts'' required testing. We have therefore decided not to adopt these proposed changes. As proposed in the NPRM, we are deleting language from part I of Appendix F to Part 25 that addresses thermal/acoustic insulation materials. This action has the same effect as the two proposed additions would have had.

Section 25.856 Thermal/Acoustic Insulation Materials

Final § 25.856(a) requires thermal/acoustic insulation material installed in the fuselage to meet the flame propagation test requirements of part VI of Appendix F to Part 25, or other approved equivalent test requirements. This requirement does not apply to ''small parts,'' as defined in part I of Appendix F to Part 25.

The current flammability requirements focus almost exclusively on materials located in occupied compartments (§ 25.853) and cargo compartments (§ 25.855). The potential for an in-flight fire is not limited to those specific compartments. Thermal/acoustic insulation is installed throughout the fuselage in other areas, such as electrical/electronic compartments or surrounding air ducts, where the potential exists for materials to spread fire as well. The final rule accounts for insulation installed in areas that might not otherwise be considered within a specific compartment. Final § 25.856(a) is applicable to all transport category airplanes, regardless of size or passenger capacity, since the consequences of an in-flight fire are not related to these factors. We are developing advisory material to describe test sample configurations to address

design details such as tapes and hook-and-loop fasteners.

One commenter recommended that we exclude ''small parts,'' as defined in part I of Appendix F to Part 25, from the requirement that insulation materials pass the upgraded flame propagation test. The commenter pointed out that there is a ''small parts'' exception to the flammability test in part I of Appendix F to Part 25.

The FAA agrees that ''small parts'' would not be practical to test in the flame propagation test apparatus specified in part VI of Appendix F to Part 25. In response, we have added to final § 25.856(a) an exception for ''small parts'' from the requirement to pass the upgraded flame propagation test. Under paragraph I(a)(v) of Appendix F to Part 25, the FAA considers ''small parts'' to be things that would not contribute significantly to a fire, including knobs, handles, rollers, fasteners, clips, grommets, rub strips, pulleys, and small electrical parts. In addition, ''small parts'' should not be installed in proximity to each other. As a result of this change, ''small parts'' will continue to be governed by existing §§ 25.853 and 25.855 and part I of Appendix F to Part 25.

One commenter suggested that, based on the language of proposed § 25.856, thermal/acoustic insulation not installed in the fuselage might also have to pass the upgraded flame propagation test.

The FAA agrees that the proposed language could allow this unintended interpretation. For this reason, we changed final § 25.856(a) to specify that thermal/acoustic insulation *installed in the fuselage* must meet the flame propagation test requirements.

A commenter stated that certain interior panels perform both thermal and acoustic attenuation functions to some extent and might therefore be categorized as thermal/acoustic insulation in the absence of a more precise definition.

The FAA does not intend to require interior panels to comply with final § 25.856. These panels are subject to existing heat release and smoke emissions requirements in parts IV and V of Appendix F to Part 25, which are more relevant to the role of interior panels in fire safety. This final rule is aimed at ensuring that thermal/acoustic insulation materials, which are usually installed in inaccessible areas, do not propagate fire. Their inaccessibility is what creates the hazard, especially with regard to in-flight fires. Interior panels are accessible and are clearly not exposed to the same threat. Thus, we do not apply the final rule to them.

A commenter stated that certain interior panels often receive acoustic damping treatments which, by virtue of their function, could be interpreted as requiring compliance under the proposal. The commenter recommended that these treatments be required to comply.

The FAA agrees in part. To the extent that acoustic damping treatments applied to the inaccessible sides of interior panels could permit fire propagation, they are required to pass the flame propagation test. On the other hand, it is clear that the many possible combinations of treatments and panels could result in large amounts of testing. We intend to investigate whether compliance for such treatments can be substantiated by tests on a generic panel, or whether testing of the actual panel is necessary. Up to now, we have not evaluated acoustical damping treatments in the context of the NPRM. Based on comments, it appears that they are typically aluminum based, so the adhesive used to bond the treatment to the panel is probably the component of concern. We will evaluate any treatments provided for review to develop guidance. As proposed in the NPRM, however, this final rule requires that thermal/acoustic insulation installed in the fuselage pass the flame propagation test. This includes material installed on the pressure shell, ducts, floor panels, and within equipment bays.

Final § 25.856(b) requires, for airplanes with a passenger capacity of 20 or greater, thermal/acoustic insulation materials (including the means of fastening the materials to the fuselage) installed in the lower half of the airplane fuselage to meet the flame penetration resistance test requirements of part VII of appendix F of Part 25, or other approved equivalent test requirements.

Final § 25.856(b) applies only to airplanes with a passenger capacity of 20 or greater. This effectively excludes the smaller transport category airplanes, as well as airplanes operating in an all-cargo mode. The primary reason for this is that airplanes with small passenger capacities are not expected to realize a significant benefit from enhanced burnthrough protection owing to their very rapid evacuation capability. That is, they have a favorable exit-to-passenger ratio. Since enhanced burnthrough protection will impose additional cost, there must be a commensurate benefit to justify the requirement. We do not consider that such benefits are substantial for airplanes with low passenger capacities. We chose the 20-passenger threshold to be consistent with other occupant safety regulations, such as those for interior materials and cabin aisle width. The enhanced burnthrough protection provided by this final rule will increase the evacuation capability of airplanes with 20 or more passengers, regardless of the exit arrangement.

Final § 25.856(b) applies to insulation materials installed in the lower half of the fuselage because that area is most susceptible to burnthrough from an external fuel fire. Flames from an external fuel fire typically impinge on the fuselage from below. Therefore, the lower half of the fuselage derives the most benefit from enhanced burnthrough protection. We chose this approach based on full-scale fire test data, as documented in the reports referenced in the NPRM, and the potential for an airplane to be off its landing gear. When the landing gear collapse, an airplane can roll significantly, and the area most susceptible to burnthrough can be correspondingly higher on the fuselage than when the airplane is on its gear. By providing burnthrough protection for the lower half of the fuselage (as opposed to just the underside), the final rule takes this situation into account.

This final rule establishes a standard for the ability of thermal/acoustic insulation to resist penetration by an external flame, rather than a standard for fuselage burnthrough per se. This distinction is important, since fuselage burnthrough is a complex process, dependent on many variables. For example, the ability of the fuselage to resist penetration from an external fuel fire is directly related to the thickness and material of the skin. Skin thickness varies considerably, and essentially means that each airplane type has different burnthrough resistance. In addition, factors internal to the airplane can also affect penetration of an external fire into the occupied areas. For example, differences in the air return grills can influence the time required for an external fire to penetrate the occupied area. Therefore, establishing a minimum standard for fuselage burnthrough resistance and identifying possible means of compliance would be a highly complex undertaking.

This final rule adopts a simple standard that increases the time it takes for a fire to penetrate the airplane beyond what currently exists, regardless of the specific capability that currently exists. Since this increase in time can be achieved by addressing thermal/acoustic insulation material, and this rule revises the standard for insulation to address flame propagation anyway, it is in the public interest to incorporate

criteria that enhance the overall level of safety and that can be achieved with reasonable cost. Therefore, this rule addresses two aspects of fire safety related to insulation material.

We intend this final rule to enhance the overall level of safety of the airplane when insulation that meets the upgraded flammability tests is installed. Because of the need to provide a suitable thermal and acoustical environment inside the airplane, we consider it extremely unlikely that insulation would be removed as a means to avoid having to comply with this rule. In fact, we considered requiring the removal of insulation material as an option to address flame propagation issues, but rejected it since it would effectively diminish the burnthrough capability that currently exists. Should removal of insulation become a common practice, we will revisit the need for a specific fuselage burnthrough standard.

A commenter asserted that the NPRM was ambiguous with regard to whether materials installed in the lower half of the fuselage would have to pass the fire penetration test. The commenter assumed that only those materials installed near the exterior skin of the fuselage would have to comply. Other commenters were concerned that the proposed requirement would apply to any thermal/acoustic insulation installed in the lower half, whether or not it would play a role in burnthrough.

The FAA's intent is that final § 25.856(b) applies to all thermal/acoustic insulation installed in the lower half of the fuselage that contributes to delaying burnthrough. For example, insulation on ducts in the lower half of the fuselage does not have to comply. To clarify this point, we added to final § 25.586(b) a statement that it does not apply to thermal/acoustic insulation installations that the FAA finds would not contribute to fire penetration resistance.

One commenter recommended that the flame penetration test not be limited to airplanes with 20 or more passenger seats. The commenter cited an accident involving an airplane with fewer than 20 seats, where improved insulation might have provided a benefit.

The FAA does not agree with the commenter's assessment of the potential role of insulation materials in the cited accident. The accident involved a non-transport category airplane that does not meet the other safety requirements of part 25. Thus, considering the addition of insulation materials apart from the other requirements of part 25 is not an accurate way to assess potential benefits. As noted in the NPRM, we have assessed the potential benefits of requiring insulation materials to pass the flame penetration test and have concluded that smaller airplanes, with their greater evacuation capability, would not realize a benefit commensurate with the costs of compliance. Readers should note, however, that this final rule does not preclude manufacturers from installing upgraded insulation materials on smaller airplanes, if they so choose.

Several commenters recommended that the requirement for flame penetration resistance be applied to insulation materials installed in the entire fuselage, not just the lower half. One commenter stated that upgraded insulation materials installed in the entire fuselage would help protect airplanes from events such as lightning strikes, which usually come from above or to the side of the airplane. These commenters noted that the NPRM stated that providing such protection would not result in great cost. Conversely, several other commenters asked that the term ''lower half'' be better defined, or that the requirement be changed to something related to the airplane design, such as the window line, or the main deck cabin floor.

The FAA has carefully considered whether insulation materials installed in the entire fuselage should have to pass the flame penetration test. As discussed in the preamble to the NPRM, the main issue is that the benefits of such a requirement would be negligible. While a scenario can be envisaged where materials in the upper fuselage would provide a benefit, the conditions would be extremely rare, and were not evident in the benefit study used to develop the proposal. For materials in the upper fuselage to be beneficial, the airplane would have to be rolled an extreme amount (by specifying the lower half, the requirement already accounts for significant roll), and still be intact. While this scenario may not be far-fetched, there must also be post-crash fire for there to be any benefit from the materials. An accident that causes a combination of severe roll attitude, no fuselage rupture, but with a post-crash fire, is extremely rare if even feasible and is not considered a reasonable basis on which to base a requirement. In addition, while the NPRM characterized the increased costs as ''not great,'' it should be noted that they are also not trivial. Any added weight would effectively be doubled, and the costs of materials would also rise. Since these costs would not be balanced by benefit, it would not be appropriate to mandate that the entire fuselage be fitted with thermal/acoustic insulation that meets the flame penetration requirement. Regarding threats from other in-flight occurrences, such as lightning, the flame propagation test required by final § 25.856(a), which is applicable to all thermal/acoustic insulation installed in the airplane, will provide added protection.

Final § 235.586(b) applies to thermal/acoustic insulation installed in the ''lower half of the airplane fuselage.'' This phrase means the area below a horizontal line that bisects the cross section of the fuselage, as measured with the airplane in a normal attitude on the ground. We have looked at the accident history, as well as research testing, and concluded that benefits will be realized with the lower half of the fuselage protected. Using another measure, such as the window line, or the main cabin floor, would not provide the intended benefit, unless those locations were in the upper half of the fuselage. We realize that thermal/acoustic insulation installations are not typically tied to the upper or lower half of the airplane, so this requirement will probably result in either changes to insulation installation approaches, or use of the complying material over somewhat more than half of the fuselage. Since new installations of insulation materials will likely be required for compliance anyway, this is not considered to be a significant point.

The FAA has determined that future design possibilities, such as blended wing-body configurations, would have to be addressed specifically, if the concept of the lower half is not appropriate.

As discussed above, final § 25.856(b) applies to thermal/acoustic insulation installed near the outer skin of the lower half of the airplane fuselage. The intent of the rule, however, is to provide a barrier that will delay entry of a post-crash fire into the occupied areas of the airplane. Therefore, if an airplane were to incorporate insulation not on the fuselage shell, but along the underside of the floor, this insulation would be subject to the flame penetration test of final § 25.856(b). In the case where insulation is installed in both places, an applicant may choose which insulation would be subject to the flame penetration test. This will be discussed and illustrated in more depth in a forthcoming Advisory Circular.

Both final 25.856(a) and 25.856(b) include a provision that allows a manufacturer to substitute approved equivalent methods for the tests specified in final parts VI and VII of Appendix F to Part 25. These provisions allow for the incorporation of improvements to the test methods as

they are identified, without requiring specific findings of equivalent level of safety under 14 CFR 21.21. Experience has shown that such improvements frequently originate with the International Aircraft Fire Test Working Group (IAMFTWG) and are readily adopted by the industry. The IAMFTWG consists of experts in the materials and fire testing specialties who help refine and support the development of test methods used in aviation, and includes representatives from the airlines, airframe manufacturers, material suppliers, and regulatory authorities, among others. A representative from the FAA Technical Center chairs this group. The IAMFTWG is a technical peer group that contributes to FAA research, but its activities are not regulatory in nature. Readers should note that final parts VI and VII of Appendix F to Part 25 constitute the basic requirements, and that such equivalent methods that might be developed would have to be adopted in total. It is not acceptable to selectively adopt portions of a modified test method that has been found to be equivalent and not all of the modified method. We will make the determination of an acceptable equivalent method.

In proposed § 25.856, we stated that these equivalent test methods would be ''FAA-approved.'' One commenter suggested that, for the sake of consistency with existing regulations, including § 25.853, this simply read ''approved.'' The FAA agrees that the suggested language is consistent with § 25.853. We believe that specifying ''FAA-approved'' adds no value. Therefore, we have accepted the suggestion and changed the wording of final § 25.856(a) and (b) to allow for ''approved equivalent test requirements.'' We consider this a non-substantive, editorial change.

Two commenters, representing the major airframe manufacturers in the United States and Europe, urged that the FAA withdraw proposed part VII of appendix F to Part 25 and propose instead a general requirement for fuselage fire penetration resistance. Other commenters stated that the FAA must address areas that currently have no insulation, or areas where insulation might be removed. Some commenters stated that insulation should be required as part of this rule.

The FAA disagrees with the comments. As noted in the NPRM, we elected to propose a standard related to thermal/acoustic insulation, since this approach is known to yield improved fire penetration resistance. A requirement related to protection of the fuselage in general involves many variables and would be much more complicated to define. We recognize that removal of insulation would avoid complying with the requirement. This possibility was discussed in the preamble, and we noted our intent to monitor this possible course of action. We agree that an ideal standard would simply require that the cabin be protected from a post-crash fire of specified intensity for an additional four minutes, and permit the manufacturer to develop his own design approach. At present, we do not have a proposal or test standard to address the overall resistance of the fuselage to fire penetration.

In addition, a proposal of that nature would go beyond the scope of the NPRM, since the NPRM only addressed a material standard for thermal/acoustic insulation. Nonetheless, it appears that industry is considering alternatives that might address the issue more generally, and we do not want to dismiss this possibility. A more general requirement would also address concerns with areas that do not currently have insulation, or where insulation is removed. Nevertheless, we consider that there is a need to adopt a standard that will provide added post-crash fire protection now, and will proceed with adoption of the final rule. Based on the comments, however, we consider it appropriate to review the industry's proposal to approach burnthrough protection as an airplane performance requirement and, if such a standard can be developed, consider it as an alternative means of compliance. Therefore, we are considering assigning the Aviation Rulemaking Advisory Committee (ARAC) the task of developing a recommendation to the FAA for a fuselage burnthrough standard. In the meantime, this regulation will be in effect, but will not actually require compliance for newly manufactured airplanes until four years after the effective date of the rule. If ARAC is successful in developing an alternative approach, we will consider whether a change to the regulations is appropriate or whether approval as an equivalent level of safety under § 21.21(b)(1) is sufficient. Regardless, under the provisions of § 21.21(b)(1), any applicant that wishes to do so can propose an alternative standard and design features meeting the objectives of the requirement at any time.

As noted in the NPRM, we have no plans to require installation of thermal/acoustic insulation in areas that currently do not have this insulation installed. Our intent is to take advantage of materials that are typically installed to affect a safety improvement, and requiring thermal/acoustic insulation to be installed in such areas would not be consistent with this intent. In fact, this approach would be more consistent with a general requirement for burnthrough protection, as discussed above. Therefore, this issue will necessarily be addressed in the proposed ARAC activity discussed above.

Part VI of Appendix F to Part 25—Flame Propagation Test

Final part VI of Appendix to Part 25 consists of a method of evaluating the flammability and flame propagation characteristics of thermal/acoustic insulation materials when exposed to both a radiant heat source and a flame. The test method we are adopting today includes specific instructions for constructing the test apparatus, calibrating instruments, and conducting the test. It also includes the standards the insulation must meet. The test involves exposing samples of thermal/acoustic insulation to a radiant heat source and a propane burner flame for 15 seconds. The tested insulation must not propagate flame more than 2 inches away from the burner. The flame time after removal of the burner must not exceed 3 seconds on any specimen.

This test method is based on American Society of Testing and Materials (ASTM) test method E 648, which uses a modest ignition source combined with exposure to radiant heat to determine fire propagation performance. This test method represents a realistic fire threat and imposes realistic success criteria, considering the state of the art of insulation materials. The test method we are adopting today is substantially the same as the one included in the NPRM, with the exception of the burn-length and after-flame standards. We discuss the changes to the standards below in the responses to comments. We have also made minor editorial changes to the language of the test method for clarity. These editorial changes are not substantive.

One commenter questioned the rationale for applying the flame propagation test to all forms of thermal/acoustic insulation, rather than just a thin film-encapsulated batting type of thermal/acoustic insulation.

The FAA's intent is to address thermal/acoustic insulation in general because of its location and quantity in inaccessible areas of the fuselage. The flame propagation test represents a realistic in-flight fire threat, and a method of assessing the tendency for materials to spread fire. We recognize that there may be different material/

installation schemes for which the flame propagation test is not well suited. However, up to now, all currently used and prospective materials that we have tested have been accommodated by the flame propagation test, with no obvious incompatibilities. If an applicant identifies an instance where this is not the case, the applicant is free to propose an alternative method of compliance that shows equivalent level of safety. However, based on the experience gathered to date, this would not seem necessary.

Several commenters addressed specific details of the test apparatus, or the test method itself, that are intended to simplify and improve the reliability of the tests. These range from correcting conversion of measurement units to test sample size to the type of radiant panel used.

The FAA has reviewed the commenters suggested improvements and adopted several of the suggested changes as appropriate; those that are not adopted verbatim are addressed in principle. Since publication of the NPRM, the FAA Technical Center has been working to improve the test methods for determining the flammability and flame propagation characteristics of thermal/acoustic insulation materials. We have revised the test methods in Appendix VI to include these improvements. A copy of the Technical Center's report, which includes a summary of the improvements, is included in the public docket for this rulemaking.

We received several comments on proposed paragraph VI(h)(1), which would have allowed no flaming beyond two inches to the left of the centerline of the point of pilot flame application to the specimen tested. One commenter noted that the designation ''to the left'' was not clear, and should specify a frame of reference. Other commenters noted that the two-inch limit was not specified as an average, or a not-to-exceed value for a sample. One commenter proposed that it must be an average to be viable. This commenter noted that virtually any material will eventually exhibit a burn length greater than two inches if enough samples are tested.

The FAA does not agree that the flame propagation length should be adjusted. The intent of the proposal (and this final rule) is to require materials that will not propagate a fire. The requirement that the flame not propagate more than two inches along the sample is intended to account for the damage that occurs as a result of the pilot burner, but not to allow any additional flame propagation. We have conducted hundreds of tests since issuance of the NPRM, and determination of propagation distance has not been a problem. The requirement of this rule is not the same as the traditional Bunsen burner requirements for ''burn length.'' For a burn-length determination, no distinction is made between burning caused by the burner itself and self-sustained combustion of the material. The Bunsen burner is oriented in the same (vertical) direction as the burn length determination, and making a distinction would be difficult at best.

For this rule, the issue is propagation of a flame beyond the damage caused by the pilot burner. The pilot burner is oriented at a right angle to the direction of measured flame propagation, making the distinction much clearer. A two-inch limit will adequately account for the damage caused by the burner, and materials that exceed this limit exhibit some tendency to propagate flame. Determination of the extent of propagation requires that a person actually watch the test, however. An after-the-fact determination is not reliable, and would probably result in failure determinations of materials that were, in fact, acceptable. Based on all of the data gathered to date, we are satisfied that the criteria are readily achievable, and that samples that exceed two inches indicate the need for corrective action. Therefore, we are adopting the burn-length standard as proposed.

We received several comments on proposed paragraph VI(h)(2), which would have allowed one of three specimens tested to have an after flame, which could not have exceeded three seconds in duration. One commenter believed that no sample should be permitted to flame after removal of the pilot burner. Several other commenters stated that the presence of such an ''after flame'' is highly dependent on the ability of the person conducting the test to remove the pilot flame at precisely 15 seconds, and that slight variation can influence whether there is a short after flame. Several commenters recommended an average after flame for three samples. Some suggested a maximum total after flame time for all samples, with a maximum for any one sample. One commenter stated that an average must be allowed, since a single sample can effectively prohibit a material from use, regardless of how many other samples are tested with satisfactory results.

The FAA agrees that we should adjust the pass/fail standard. We also believe we can adjust the standard without affecting the intent of the requirement, which is to prevent insulation materials from spreading a fire. Based on the comments and a review of the test data acquired to date, we agree that materials that meet the intent of the requirement can sometimes fail the test, as proposed. (The proposed test standard would have required two of the three test samples to have no after flame whatsoever). As noted by commenters, this could be due to operator variations in detailed test procedures, material variability, or a combination of the two. While we have made every effort to remove operator variables from the test method, the stringency of the requirement tends to magnify whatever slight variations exist. Similarly, slight material variations are inevitable, even with the best materials. In light of the above, we have determined that we should adjust the pass/fail standard for after-flame time to account for slight variations. Therefore, we have revised final paragraph VI(h)(2) of appendix F to Part 25 to permit after flame on any sample, but require that none of the three samples have an after flame time of greater than three seconds. This change allows small variability in all of the samples, but retains the intent of the requirement that the material not continue to burn after the pilot flame is removed.

Several commenters addressed the fact that insulation materials frequently consist of more than a film-covered batting material. These commenters point out that tapes and hook-and-loop fastening systems are often used on insulation to perform various functions. Some commenters state that these additional features must be included in the requirement, while others only question how they would be tested if they were to be included.

Final part VI of Appendix F to Part 25 applies to the thermal/acoustic insulation assembly, which includes tapes or hook-and-loop fasteners that are affixed to the film. In addition, research testing has shown that these details can have a pronounced effect on the flame propagation characteristics of the insulation. We are developing advisory material that will explain an acceptable test sample configuration to address those details. We recognize that the use of tapes, for example, is quite variable, and it may not be possible to address each production configuration with a single test sample configuration. We hope to be able to establish a critical case that may be used to qualify other configurations, and plan to outline this approach in the advisory material.

One commenter noted that, for air ducts in particular, the test criteria do not provide sufficient detail as to how they should be tested. The commenter contends that we did not give adequate

consideration to ducting when the proposal was developed, since insulation on air ducts is frequently different than that attached to the fuselage.

The FAA agrees that insulation on air ducts has not been addressed to the same extent as other insulation. However, the concerns with fire propagation are the same, and insulation on air ducts should meet the same standard, as noted in the NPRM. We are developing advisory material that will include discussion of insulation on air ducts, and the proper method of configuring test samples. This might require modification to some of the installation practices that are currently employed. For example, complete surface bonding of film to the batting material requires a large amount of adhesive, and adhesives have been shown to be problematic for flame propagation. However, other methods are available that will comply.

The commenter also noted that acoustic treatments are sometimes applied to the interior of ducts, and that this treatment should not be required to comply since it is not exposed.

The FAA agrees that this requirement would not apply to acoustic treatment completely enclosed by ducts. However, we are studying all materials in inaccessible areas, and intend to develop standards for such materials that are consistent with the threat level established to develop the flame propagation test. In that case, it is likely that the duct construction itself would be included.

Under the current requirements, parts too large to be considered ''small parts'' require testing, and the basic requirements for the test sample construction will be no different under this final rule. The major difference is the size of the test sample. Parts that are smaller than the test sample size could be addressed on a case-by-case basis. We have reduced the sample size from that in proposed paragraph VI(c)(2), based on data acquired since publication. See final paragraph VI(C)(3). We encourage use of materials and constructions that meet the radiant panel test for all such parts, no matter how small.

Part VII of Appendix F to Part 25—Flame Penetration Test

Final part VII of Appendix to Part 25 consists of a method for evaluating the burnthrough resistance characteristics of aircraft thermal/acoustic insulation materials when exposed to a high-intensity open flame. The test method we are adopting today includes specific instructions for constructing the test apparatus, calibrating instruments, and conducting the test. It also includes the standards the insulation must meet. The test involves use of a kerosene burner apparatus that realistically simulates the thermal characteristics of a post-crash fire. The test stand and specimen are configured to simulate a small section of fuselage frame and stringers with insulation material mounted over them. Fuselage skin is not represented in this test since the delay in burnthrough afforded by the skin is not directly related to the performance of the insulation. The test is intended to measure the performance of the insulation installation itself. The test involves exposing samples of thermal/acoustic insulation blankets mounted in a test frame to a burner for four minutes. The insulation blankets must prevent flame penetration for at least four minutes and must limit the amount of heat that passes through the blanket during the test.

For new designs, the new burnthrough test method is applicable to the insulation as installed on the airplane. Thus, consistent with similar flammability testing of other installed materials, the means intended to be used for fastening the insulation to the fuselage must be accounted for when performing tests. For consistency, the test method imposes a standard methodology for fastening. In addition, we are developing advisory material concerning the installation of insulation that would enable the installer to avoid a specific test on the fasteners, etc. Although failures of fasteners or seams during this test may not exacerbate flame propagation characteristics, such failures could adversely affect the burnthrough protection capability. Since research has shown practical fastening means are available for ensuring that the insulation material remains in place, we have determined that fastening means must be considered for newly manufactured airplanes.

The test method we are adopting today is substantially the same as the one included in the NPRM. We discuss changes to the test method below in the responses to comments. We have also made minor editorial changes to the language of the test method for clarity. These editorial changes are not substantive.

Some commenters asserted the test method has not been demonstrated to be repeatable.

The FAA has sponsored three round-robin test series to date and has made refinements to the test method and apparatus as a result. One significant problem with the test equipment that has been rectified is the use of various shapes and sizes of airflow vanes (stators) inside the burner draft tube. For reasons unknown, this inconsistency in fabrication developed and significantly contributed to the scatter of data obtained during inter-laboratory comparisons. Since all laboratories now have the identical stators installed, the inter-laboratory test correlation should be much better. All test results are currently displayed on the IAMFTWG Web site at *http://www.fire.tc.faa.gov.* The repeatability of results has improved with each successive round robin, and we are satisfied that the test is sufficiently repeatable for use in the final rule.

One commenter specifically addressed the effects of altitude as not being accounted for in the test method, and proposes that this variable among test facilities must be addressed.

Regarding the potential effects due to altitude of the test facility, the FAA agrees that this is possible. In fact, the test results seen in the round robin tests discussed above strongly suggest that the effects of altitude are responsible for much of the variation. It should be noted that the fuel and airflow prescribed in this test method are meant to reflect an actual pool fire condition in which the fuel/air ratio is typically not stoichiometric. The conditions are representative of a large pool fire with respect to the two main criteria of temperature and heat flux. Therefore, the differences in combustion using the specified airflow and fuel flow values at different altitudes would also not be expected to result in a stoichiometric process. We agree that an altitude correction factor could be implemented in order to obtain more repeatable test results from labs located at various altitudes. An applicant would be free to propose an alternative method, with supporting data. If requested, we will work with an applicant to establish the proper correction.

Several commenters addressed specific details of the test method and test apparatus. One commenter stated that the calibration parameters are too narrowly specified to permit reliable calibration. The commenter proposed tolerances on the fuel flow and air intake. One commenter advised that the combined heat flux/thermocouple calibration rig is not practical and separate rigs should be used. Another commenter requested clarification of the term ''assembly processes'' for sample fabrication.

The FAA has considered detailed comments on the test apparatus itself, and these have been adopted for the most part. The new apparatus details are specified in final part VII of Appendix

F to Part 25, and do not change the scope or intent of the test. As noted above, a significant clarification is the use of a standard stator vane assembly for the burner draft tube.

With respect to the calibration requirements, the test method prescribes the use of a highly dynamic fire source, the characteristics of which are highly transient. Testing has shown that the set-up (configuration) of the test burner plays a major role in the performance of many materials. The parameters with which to control the burner flame, (namely fuel flow rate, air intake velocity, as well as the positioning of the components necessary for firing the fuel/air mix (stators and igniter set)) must be very tightly controlled in order to minimize error between testing facilities. A tolerance of ±1 gallon per hour fuel flow rate is well beyond the limit that is necessary to eliminate fluctuation between testing facilities. Similarly, a tolerance of ±100 ft/min air velocity is excessive, and will only result in increased fluctuation of test results between testing facilities.

The accuracy of the heat flux measurement of the burner flame is highly dependent on the condition of the heat flux transducer, its position, and its accuracy. However, we agree that a minimum heat flux value (rather than a range, as proposed) is sufficient to establish whether a material performs acceptably, and have revised the test method accordingly.

The term ''assembly processes'' is intended to address the way in which the thermal/acoustic insulation components are built up. For example, for a traditional batting encapsulated in a moisture barrier, there may be seams that are heat sealed, or stitched, or utilize a hook and loop type closure. These must be included in the test sample. However, features added to the surface of the thermal/acoustic insulation would not need to be included in the test sample if they do not affect the fire penetration resistance. For example, use of tapes on the moisture barrier will not require assessment in the fire penetration test. Note that these same features will require assessment in the flame propagation test of part VI of Appendix F to Part 25.

Some commenters proposed that the burnthrough time be increased to five or six minutes to provide a margin for the desired four minutes, or to account for more fire resistant materials. Other commenters questioned the heat flux value specified, and proposed that it be reduced.

The FAA does not agree that the burnthrough time should be extended to five or six minutes. In the benefit study conducted on behalf of the FAA by Cherry & Associates,[1] a four-minute extension in evacuation time is shown to provide a measurable improvement in survivability. Beyond four minutes, there is little benefit. Although a product may provide more than four minutes of burnthrough protection, this does not justify a requirement if no additional benefit is provided.

Regarding comments that the time should be extended to provide a margin of safety that will ensure four minutes of protection, we agree that a certification requirement cannot assure that every material lot and batch will perform identically. However, this would be true regardless of the time specified in the regulation. We consider that the rule should not account for variation in material lot or batch. The certification requirement is intended to address the basic material and installation scheme in accordance with the type design. The manufacturer will need to develop quality control procedures to ensure consistent performance of the material.

The heat flux measurement provision is included in the pass/fail criteria to account for materials that behave similarly to a flame arrestor, and do not inhibit heat transfer. The heat flux measurement provides an indication of the hazard inside the airplane, but supplements, rather than replaces, the basic requirement to resist flame penetration. Flame penetration time is the fundamental concern. This can be described as the time at which the test burner flames directly cause a breach to form in the insulation material, thereby allowing the flames to pass through from the front to the back face. For some materials, the failure event is catastrophic and the occurrence can be measured quite accurately. However, it can be difficult to measure the event for other longer-lasting materials, as the failure does not occur instantaneously, but rather gradually over time. These materials typically allow a very small breach to occur initially, and the breach gradually increases in size as the test progresses. As a guideline, a material can be considered to fail when the size of the breach reaches 0.25 inch in diameter.

There have been instances where tested insulation materials (insulation and film) have ignited on the back face and caused surface propagation to occur. This surface propagation is not considered a burnthrough and would be acceptable, provided the heat flux level measured behind the sample does not exceed 2.0 Btu/ft^2 sec at any time during the test. However, since the same materials will also be required to meet the flame propagation standard of part VI of Appendix F to Part 25, it is likely that a material exhibiting this type of back face ignition would be screened out by that test.

There have been other instances whereby flames can reach the back side of the insulation materials by passing through passageways created between blankets or between the sample and the test frame. This typically occurs between clamping locations, and is generally not a function of the material's flame penetration resistance, but rather a result of improper mounting. This occurrence should not be considered a failure, provided the material is not breached when inspected after the test. We will address issues related to material overlap and installation in a forthcoming Advisory Circular.

Several commenters addressed the issue of attachment of thermal/acoustic insulation to the fuselage. Some commenters noted what they consider to be a conflict between proposed § 25.856 and proposed part VII of Appendix F to Part 25, since the regulation requires that the means of attachment comply, but the appendix specifies an attachment scheme for test. Several commenters state that advisory material is needed to establish acceptable means of attachment, and stress its importance in providing burnthrough protection.

The FAA does not agree that the wording of proposed § 25.856 and part VII of Appendix F to Part 25 are in conflict. As noted in the NPRM, the test fixture is intended to test the material system in a manner that will ensure its retention since, for the sake of simplicity, the fixture does not replicate any specific airplane. In other words, the installation must meet the requirement, but, for simplicity, the test method does not include installation details. We have participated in a research program with the Civil Aviation Authority (CAA) in the United Kingdom to assess acceptable installation methods. Acceptable methods can only be established using representative airframe structure, since the interaction between the attachment and the airframe will influence the performance of an otherwise acceptable material. In addition to the collaborative effort with the CAA, we have conducted additional full-scale fire tests to assess

[1] FAA Office of Aviation Research, U.S. Dept. of Transportation, Fuselage Burnthrough Protection for Increased Postcrash Occupant Survivability: Safety Benefit Analysis Based on Past Accidents, DOT/FAA/AR–99/57, Sept. 1999. Available at *http://www.tc.faa.gov/its/worldpac/techrpt/ar99–57.pdf.*

the sensitivity of burnthrough performance to minor installation variations. As a result of this research, we are developing an advisory circular that describes acceptable methods of installation. The advisory circular addresses attachment schemes, overlap between the insulation and airframe structure and overlap of more than one insulation blanket. We recognize that other methods of installation may be equally acceptable, or necessary, particularly with insulation systems that are different from those described in the AC. However, an applicant would need to demonstrate that alternative approaches provide an equivalent level of safety. Such demonstrations would require testing of a scale appropriate to the feature being investigated.

One commenter disagrees with discussing detailed installation methods in an advisory circular. The commenter states that installation methods should be part of the rule, and not separated into an AC.

The FAA does not agree. The installation methods are, in fact, part of the regulation. However, in order to address the installation methods in the certification test method, the test fixture would have to be modified for each installation, which is impractical and could lead to a lack of standardization. In addition, it is doubtful that the scale of the oil burner test could adequately assess certain installation issues that would be significant in a post crash fire. For these reasons, we have elected to simplify the test method, and provide guidance on acceptable installation methods. An applicant is free to propose testing that would substantiate the actual installation, but we do not intend to require this when the advisory material covers the installation methodology.

One commenter states that the test method does not adequately address ''non-conforming'' materials, such as rigid foams, and could result in the placement of a fire barrier that is closer to the calorimeter than is the case for traditional blanket materials. The commenter contends that the relationship of the barrier to the calorimeter can affect the test results.

The FAA agrees that the relative position of the fire barrier and the calorimeter can influence the test results. However, we do not agree that moving the barrier closer to the calorimeter will always have negative effects. The relationship of the burner to the calorimeter is constant, so the relative performance of the barrier material, whatever it is, is based on the effect of the burner at the calorimeter location. To vary this relationship would compromise the standardization of the test method. We recognize that the test method is only representative of, and not identical to, the actual fire threat. Therefore, an applicant would be free to demonstrate that a particular design approach provides the same level of safety if the applicant believes that the test setup does not adequately evaluate the design.

Operating Requirements in Parts 91, 121, 125, and 135

Newly Manufactured Airplanes

This final rule requires transport category airplanes operating under parts 91, 121, 125, and 135 to comply with the new standards relative to flame propagation in final § 25.856(a). This portion of the final rule applies to airplanes manufactured more than two years after the effective date of this final rule. These requirements are found in final §§ 91.613(b)(2), 121.312(e)(2), 125.113(c)(2), and 135.170(c)(2). We are adopting these requirements exactly as proposed in the NPRM except for adding the words ''in the fuselage'' to make clear that only thermal/acoustic insulation materials installed *in the fuselage* are subject to the requirements.

Since there are materials currently available that will meet the new standards, these requirements impose minimal additional costs. These requirements are applicable to airplanes manufactured more than two years after the effective date of the final rule. Two years is considered sufficient time to allow for material production capacity to be developed and for disposition of existing inventory.

Readers should note that these requirements differ from previous rulemaking related to flammability of materials in that the applicability to newly manufactured airplanes is not limited to operations under part 121. The reasons for this are that the rule adds minimal cost and the potential for an in-flight fire is not limited to air carrier operations.

In accordance with § 21.17, these new standards are applicable to new type certificates for which application is made after the effective date of the final rule. In addition to changing the design standards for future type certificate applications, we consider that the benefits from improved flammability standards can be realized for existing designs as well. The technology exists today so that these benefits can be obtained in a cost-effective manner by applying the standards under some circumstances to newly manufactured airplanes and to existing airplanes when insulating materials are replaced. Our means for obtaining benefits earlier than would be provided by changing design standards is to revise the operating rules. Requirements for newly manufactured airplanes become a basic airworthiness requirement for those airplanes and apply throughout their service life. Requirements for the existing fleet relate to materials that are replaced in service. This latter aspect of the rule does not affect newly manufactured airplanes, since they are already required to comply by virtue of their date of manufacture.

Replacement of Existing Insulation

This final rule requires that thermal/acoustic insulation materials, when installed as replacements more than two years after the effective date of this final rule, meet the new flame propagation test requirements of final § 25.856(a). This requirement applies to existing transport category airplanes operating under parts 91, 121, 125, and 135 and to the same types of airplanes manufactured within two years of the effective date of this final rule. See final §§ 91.613(b)(1), 121.312(e)(1), 125.113(c)(1), and 135.170(c)(1). We are adopting these requirements exactly as proposed in the NPRM except for adding the words ''in the fuselage'' to make clear that only thermal/acoustic insulation materials installed *in the fuselage* are subject to the requirements.

This action provides for the gradual attrition of materials installed under earlier standards. Since there are existing materials that meet the new standards, and since those materials cost and weigh only marginally more than other materials, this should result in negligible additional cost to operators.

As with newly manufactured airplanes, it is appropriate to address not only those airplanes operated in part 121 air carrier service, but other operations as well, since the flame propagation portion of this final rule enhances safety over the current regulatory requirements, and can be done inexpensively.

Although it is difficult to quantify the benefits of piecemeal replacement of materials, the cost of replacement is low and adds minimal burden. This final rule allows time for attrition of current inventories and acquisition of new materials. Replacement insulation does not have to comply until two years after the effective date of this final rule. We expect this requirement to have little impact since only a relatively small amount of insulation materials are replaced every year.

Larger Airplanes Operating Under Part 121

This final rule requires newly manufactured airplanes with a passenger capacity of 20 or greater operating under part 121 to comply with the burnthrough protection standards in final § 25.856(b). See final § 121.312(e)(3). This requirement applies to airplanes manufactured more than four years after the effective date of the final rule. Although there are materials currently available that will meet the standards, these materials are not widely used. Therefore, we expect the burnthrough portion of the rule to require both material and, in many cases, design changes. As discussed in the context of the part 25 changes, these design changes relate primarily to the means of fastening the insulation to the fuselage structure. For those airplanes that require design changes, we recognize that adequate time is necessary to perform the necessary engineering and to obtain approval for the changes. We consider four years to be a reasonable time to implement any design changes and configuration control measures required to account for the new standard and to allow for material availability.

Generally, airplanes operated under parts 91, 125, and 135 carry fewer passengers than airplanes operating under part 121 and can, as a result, be evacuated more quickly. Therefore, we consider that the additional evacuation time provided by enhanced fuselage burnthrough protection would not provide the same increase in safety for these airplanes. In light of the costs associated with requiring compliance with the burnthrough standard, imposing the requirement would have a negligible benefit. This conclusion is similar to the conclusion, discussed in the context of the proposed part 25 burnthrough standard, not to impose the new standard for airplanes with fewer than 20 passengers. However, since transport category airplanes can be operated under different regulatory requirements throughout their service life, it is likely that most, if not all, affected newly manufactured transport category airplanes will comply, to account for potential future part 121 operations.

Replacement

This final rule does not require installation of materials complying with the burnthrough test standards in all transport category airplanes because it would not provide a substantial benefit. If the fuselage is subjected to an external fire, it is unlikely that insulation complying with this standard that has been installed in a portion of the fuselage would significantly delay burnthrough if the rest of the fuselage contains insulation that does not comply with the new standard. As discussed previously, in order to be effective against burnthrough, new insulation materials would also have to be installed in a manner that would allow them to remain in place when exposed to an external fire. Requiring that the means of fastening, and the associated engineering necessary to incorporate design changes, be accounted for on a material replacement basis would be very expensive, with negligible benefit.

Date of Manufacture

For the purposes of this final rule, we consider the date of manufacture to be the date on which inspection records show that an airplane is in a condition for safe flight. This is not necessarily the date on which the airplane is in conformity with the approved type design, or the date on which a certificate of airworthiness is issued, since some items not relevant to safe flight, such as passenger seats, may not be installed at that time. It could be earlier, but would be no later, than the date on which the first flight of the airplane occurs. This definition has been used in previous rulemaking, including the preamble to our February 2, 1995, final rule entitled Improved Flammability Standards for Materials Used in the Interiors of Transport Category Airplane Cabins (60 FR 6616, 6617).

Compliance Time

Commenters were divided as to whether more or less time should be allowed for compliance by newly manufactured airplanes with the flame propagation requirement of final § 25.856(a). No commenter provided any data to support this position, although one commenter noted that it might be required to make part number changes in order to facilitate a material changeover, which will take time. Another commenter noted that a longer compliance period for retrofit of non-compliant insulation on air ducts on a particular airplane type was permitted in accordance with an airworthiness directive, and this seems inconsistent with the proposal.

With respect to comments that the compliance period for newly manufactured airplanes should be adjusted either up or down, in the absence of any data to support either position, the FAA cannot justify a change. While we agree that part number changes might be necessary, it is not the only method to assure configuration control. Any other method in which configuration control is assured would be acceptable. Therefore, a change to the compliance time is not justified on this basis.

Finally, the comment that the proposed compliance time does not coincide with a similar airworthiness directive is not relevant to this rule. The airworthiness directive requires retrofit of airplanes that are already in service. This is a much more labor intensive and complicated process than incorporating a different material in production. Therefore no change is made to the compliance time for flame propagation.

Paperwork Reduction Act

In accordance with the Paperwork Reduction Act of 1995 (44 U.S.C 3507(d)), we have determined that there are no requirements for information collection associated with this final rule.

International Compatibility

In keeping with U.S. obligations under the Convention on International Civil Aviation, it is FAA policy to comply with International Civil Aviation Organization (ICAO) Standards and Recommended Practices to the maximum extent practicable. We have determined that there are no ICAO Standards and Recommended Practices that correspond to these regulations.

Economic Evaluation, Regulatory Flexibility Determination, Trade Impact Assessment, and Unfunded Mandates Assessment

Changes to Federal regulations must undergo several economic analyses. First, Executive Order 12866 directs each Federal agency proposing or adopting a regulation to first make a reasoned determination that the benefits of the intended regulation justify its costs. Second, the Regulatory Flexibility Act of 1980 requires agencies to analyze the economic impact of regulatory changes on small entities. Third, the Trade Agreements Act prohibits agencies from setting standards that create unnecessary obstacles to the foreign commerce of the United States. In developing U.S. standards, this act requires agencies to consider international standards, and use them where appropriate as the basis of U.S. standards. Fourth, the Unfunded Mandates Reform Act of 1995 requires agencies to prepare a written assessment of the costs and benefits and other effects of proposed and final rules. An assessment must be prepared only for rules that impose a Federal mandate on State, local, or tribal governments, or on

the private sector, likely to result in a total expenditure of $100 million or more in any one year (adjusted for inflation).

In conducting these analyses, the FAA has determined that this rule has benefits that justify its costs. This rulemaking does not impose costs sufficient to be considered ''significant'' under the economic standards for significance under Executive Order 12866. Due to public interest, however, it is considered significant under the Executive Order and DOT policy. This rule will not have a significant impact on a substantial number of small entities. This rule has no affect on trade-sensitive activity. This rule does not impose an unfunded mandate on state, local, or tribal governments, or on the private sector. The FAA has placed these analyses in the docket and summarized them below.

Benefits and Costs

Benefits

This rule will generate safety benefits by averting accidents that involve propagation of flame on the film bags that encase thermal acoustic insulation batting, and by mitigating accidents that involve fire burning through from outside an airplane into its cabin. Over a 20-year analysis period the rule is expected to avert one catastrophic accident and a recoverable accident. The estimated present value of the combined flame propagation and burnthrough benefits is about $222.6 million in constant 2001 dollars.

Flame Propagation Benefits

When an in-flight fire that propagates on insulation in an inaccessible area is detected soon enough, diversion of the flight is likely, thus averting death, injury, and damage to the airplane. However, if such a fire is not detected until it grows beyond the capacity of the aircrew to control, a catastrophic accident with 100 percent fatalities and the complete loss of the airplane can result. The estimate of the expected benefits of complying with the flame propagation requirements is based on averting such a catastrophic accident. The components of this estimate include (1) averting the deaths; (2) averting the loss of the airplane; and (3) averting the costs of investigating the accident.

An example of a potential future averted accident (basis accident) is the catastrophic accident that occurred on September 2, 1998, when Swissair Flight 111 crashed off the coast of Nova Scotia, Canada, with the loss of 229 lives. Although the Transportation Safety Board of Canada has not released its final investigative report, on August 28, 2001, that agency issued Aviation Safety Recommendations, stating that ''* * *The most significant material flammability deficiency discovered has been the inappropriate flammability characteristics of the MPET-covered thermal acoustic insulation blankets* * *''

In September 2001, the Fire Safety Section of the FAA's William J. Hughes Technical Center provided its professional engineering opinion that ''* * *this rule change will likely prevent one catastrophic in-flight accident over a twenty-year period after implementation.''

The Section supports its judgment as follows:

> ''During the study period from 1967 through 1998 three fatal in-flight fires occurred on 121 carriers in North America and an additional six throughout the rest of the world in which the fire was in an inaccessible area and the thermal/acoustic film may have played an important role. A review of recent incident, accident, and service difficulty reports indicates that there are between three and five in-flight fires causing serious damage on part 121 aircraft in the U.S. per year. Most of those occurrences included the spread of fire on the thermal/acoustic film. *Preliminary information obtained on one accident (Air Tran Airways, DC–9–32 on November 29, 2000, at Atlanta, Georgia) indicates that had the fire started a little later in the flight the aircraft would not have been able to make it back to the airport.*
>
> *Given the above, it is estimated that one catastrophic in-flight fire accident will occur every ten years in the U.S. Thermal acoustic insulation film makes up a large percentage of the surface area in the inaccessible areas of airplanes. If this rule change were fully implemented, it would eliminate 50% of the annual 3 to 5 in-flight fires, thus halving the likelihood of a catastrophic accident to one in every 20 years.*'' (emphasis added)

The expected present-value benefits from averting a catastrophic accident are estimated to include: averting fatalities ($110 million); averting the loss of an airplane hull ($16 million); and averting the costs of an accident investigation ($1 million). These benefits total to $127 million.

Burnthrough Benefits

The estimated burnthrough benefits of this rule are based in the September 1999 report ''Fuselage Burnthrough Protection for Increased Postcrash Occupant Survivability: Safety Benefit Analysis Based on Past Accidents,'' DOT/FAA/AR–99/57 (*http://www.tc.faa.gov/its/act141/reportpage.html*), hereafter referred to as the Cherry Study. This study concludes that four minutes of additional resistance to burnthrough will result in averting 10.1 fatalities and 13.5 injuries per year over the worldwide fleet of passenger-carrying airplanes. The FAA adjusted these fatalities and injuries so as to apply only to part 25 airplanes in part 121 service over the forecast period. The present value total benefit of $95 million includes $50 million from averted fatalities, $34 million from averted injuries, and $11 million from averted accident investigations

Benefit Summary

Thus, over the 20-year period of analysis examined in this evaluation, the estimated total present value of flame propagation and burnthrough benefits is $222.6 million.

SUMMARY OF BENEFITS

	Monetary benefits derived by averting deaths	Monetary benefits derived by averting loss of aircraft or injuries	Monetary benefits derived by averting accident investigations	Total monetary benefits
Flame Propagation	$110.3	loss of aircraft—$15.6	$1.4	$127.3
Burnthrough	50.5	Injuries—33.9	10.8	*95.3
Total	160.8	49.5	12.2	*222.6

*Rounded

Estimates of Costs

This evaluation examines four components of cost: (1) The acquisition of test apparatus used to establish the new testing standards; (2) the installation and the maintenance of insulating material to meet the flame propagation requirement; (3) the installation of insulating material to meet the burnthrough requirement; and (4) engineering costs, including those of configuration management, which includes changing (also called ''rolling'') parts numbers.

Final rule evaluation estimates differ from those of the NPRM evaluation with respect to cost components (1), (2) and (4), as follow:

- The cost of test apparatus was excluded;
- Costs of material to be installed and replaced for the flame propagation requirement were added;
- The cost of a fuel-weight penalty for burnthrough compliance was added;
- The engineering cost of possible changes in design and installation of insulation blankets was eliminated;
- Costs of the engineering work of configuration management were greatly increased.

Each of the four components of the cost estimate is considered in turn below.

The cost of test apparatus was excluded because this cost of compliant insulation is expected to include the cost of test apparatus. To include the cost of test apparatus will result in counting the cost of test apparatus twice.

This final rule evaluation found that flame propagation material requirements is expected to add cost and weight that was not considered in the NPRM evaluation. While neither installation during manufacture nor replacement during maintenance is expected to add to labor costs, each will add to cost of material and to weight. The incremental cost of the insulation is $2.05 per square yard. The additional weight will result in additional fuel cost.

Unlike the NPRM this final rule evaluation assigns a minimal cost to the design and installation expense. This change in approach results from FAA technical opinions that became available after the completion of the NPRM evaluation. FAA technical opinions state that the common method of installation shown *will* meet burnthrough requirements *if* a layer of ceramic paper is laminated inside the outboard layer (the layer next to the aluminum skin of the airplane) of the metalized polyvinylfloride film. As the method of installation will not change, there will be no additional engineering expense for design and installation.

While one commenter stated that the FAA's NPRM estimate of engineering costs was greatly overstated, this final rule evaluation finds that the NPRM estimate of the costs of the engineering work of configuration management costs was low. Considering other comments and clarifications about the formalization, technical and regulatory requirements, and organizational complexity involved in managing aviation parts nomenclature, the FAA revised its NPRM cost estimate upward.

The agency accepts the industry estimate that as much as eight hours can be required to fully effect changes in nomenclature for each aviation part involved in compliance. These eight hours make up the time needed for work that begins with the initiation of a change in (or with the introduction of new) nomenclature, and that ends with the completion of the authorized and documented release of that nomenclature to all appropriate holders.

Summary of Cost

Flame propagation present-value compliance costs are estimated to be approximately $76.2 million. The burnthrough present-value compliance costs are expected to be approximately $32.2 million. Thus the total cost for this rule is $108.4 million (total does not add due to rounding). The specific cost elements for flame propagation and burnthough are present in the Summary of Costs table.

SUMMARY OF COSTS

	New installation material cost	Maintenance driven replacement cost	Added fuel weight cost	Engineering costs	Total costs
Flame Propagation	$13.8	$2.8	$1.5	$58.1	$76.2
Burnthrough	20.6	.....	2.0	9.6	32.2
Total	.....	.....	.....	.....	108.4

Comparison of Benefits and Costs

When discounted at 7 per cent annually, the present value of the overall benefits of this final rule is about $222.6 million in constant 2001 dollars. Estimated overall costs are about $108.4 million in 2001 dollars. Thus, taken as a whole, the rule is cost effective. The discounted present values of the benefits of the flame propagation requirements are about $127.3 million, and comparable costs are about $76.2 million. The discounted present values of benefits of the burnthrough requirements are about $95.3 million, and comparable costs are about $32.2 million. Thus, each part of the rule, considered separately, is cost effective.

Regulatory Flexibility Determination

The Regulatory Flexibility Act of 1980 (RFA) establishes ''as a principle of regulatory issuance that agencies shall endeavor, consistent with the objective of the rule and of applicable statutes, to fit regulatory and informational requirements to the scale of the business, organizations, and governmental jurisdictions subject to regulation.'' To achieve that principle, the Act requires agencies to solicit and consider flexible regulatory proposals and to explain the rationale for their actions. The Act covers a wide-range of small entities, including small businesses, not-for-profit organizations and small governmental jurisdictions.

Agencies must perform a review to determine whether a proposed or final rule will have a significant economic impact on a substantial number of small entities. If the determination is that it will, the agency must prepare a regulatory flexibility analysis as described in the Act.

However, if an agency determines that a proposed or final rule is not expected to have a significant economic impact on a substantial number of small entities, section 605(b) of the 1980 act provides that the head of the agency may so certify and a regulatory flexibility analysis is not required. The certification must include a statement providing the factual basis for this determination, and the reasoning should be clear.

The FAA conducted the required review of this final rule, and finds the following:

(1) Engineering and manufacturing costs of this rule apply to manufacturers of part 25 airplanes. No such manufacturer is a small business;

(2) In December 2000, the FAA identified 28 airlines that were small businesses. This evaluation assumes each will replace about 2.8% of the insulation in each of its airplanes with rule compliant insulation yearly, on a maintenance-driven basis. Fleet sizes of those 27 carriers still in business range from 2 to 24. The FAA believes the average annual cost of compliance for these carriers will approximate $60 per airplane. Based on fleet size, the annual costs incurred by average small business carrier is estimated at $420. This amount is less than an hour of annual operating cost for the airplanes affected by this rule;

(3) Because the FAA believes that manufacturers will pass along their increased compliance costs to the airlines the agency reviewed the scope and significance of these costs to operators. The discounted present (2001) value of the average airplane newly delivered in 2006 (the first year both flame propagation and burnthrough requirements will be implemented) is about $34.8 million in constant 2001 dollars. Assuming the manufacturer spreads engineering costs (for each requirement) over a 10-year production run, about $12,000 will be added to the cost of the average airplane. Material costs for both requirements will add another $11,000. Thus, about $23,000, or just under seven one-hundredths of one percent is added to the cost of the average airplane that might be acquired by the average small business airline. The FAA believes a small business airline that will acquire, or will secure the use of a $34.8 million capital asset will not be burdened by this small increment.

Accordingly, pursuant to the Regulatory Flexibility Act, 5 U.S.C. 605(b), the Federal Aviation Administration certifies that this rule will not have a significant economic impact on a substantial number of small entities.

International Trade Impact Assessment

The Trade Agreement Act of 1979 prohibits Federal agencies from engaging in any standards or related activities that create unnecessary obstacles to the foreign commerce of the United States. Legitimate domestic objectives, such as safety, are not considered unnecessary obstacles. The statute also requires consideration of international standards and where appropriate, that they be the basis for U.S. standards.

In accordance with the above statute, the FAA has assessed the potential effect of this final rule and has determined that it will impose the same costs on domestic and international manufacturing entities, and will impose minimal operating costs on domestic operators. The agency believes this final rule will approximate a neutral impact on trade.

Unfunded Mandates Reform Act

Title II of the Unfunded Mandates Reform Act of 1995 (the Act), enacted as Pub. L. 104–4 on March 22, 1995, requires each Federal agency, to the extent permitted by law, to prepare a written assessment of the effects of any Federal mandate in a proposed or final agency rule that may result in the expenditure by State, local, and tribal governments, in the aggregate, or by the private sector, of $100 million or more (adjusted annually for inflation) in any one year. Section 204(a) of the Act, 2 U.S.C. 1534(a), requires the Federal agency to develop an effective process to permit timely input by elected officers (or their designees) of State, local, and tribal governments on a proposed ''significant intergovernmental mandate.''

A ''significant intergovernmental mandate'' under the Act is any provision in a Federal agency regulation that would impose an enforceable duty upon State, local, and tribal governments, in the aggregate, of $100 million (adjusted annually for inflation) in any one year. Section 203 of the Act, 2 U.S.C. 1533, which supplements section 204(a), provides that before establishing any regulatory requirements that might significantly or uniquely affect small governments, the agency shall have developed a plan that, among other things, provides for notice to potentially affected small governments, if any, and for a meaningful and timely opportunity to provide input in the development of regulatory proposals.

This rule does not contain any significant Federal intergovernmental or private sector mandate. Therefore, the analytical requirements of Title II of the Unfunded Mandates Reform Act of 1995 do not apply.

In estimating the costs associated with this final rule, we refined the analysis that we prepared for the September 20, 2000 NPRM. See 65 FR 56998. At that time, we estimated the total discounted costs of the NPRM to be $68.2 million. As stated above, we estimate the total discounted cost of the final rule to be $108.4 million. The primary reason for the increase in the cost estimate is that we believe that the NPRM cost estimate of configuration management was too low. Based on comments we received on the NPRM about the complexity of managing aviation parts nomenclature, we revised the cost estimate upward.

Several commenters on our estimates of the costs of the proposed rule address our use of a particular commercial product in the cost and benefit assessment. Some commenters note that the material discussed is actually a family of materials, rather than a single product, and it could be misleading to imply that only one material is being considered. Other commenters object to the use of any trade name, and state that this implies that the FAA is endorsing a particular product.

As discussed in the NPRM, the FAA specifically requested information on materials that manufacturers would use to comply with the requirement. This was because we could not obtain definitive information on the optimal means of compliance, and were forced to rely on information available to make an assessment of the costs of compliance. In so doing, we used as an example a product where the performance and cost information could be readily obtained. This is not a product endorsement, or even a suggestion of a preferred means of compliance. It is merely an example that could be quantified to illustrate what the cost of compliance could be. In order for this information to be of any value, the particular product has to be mentioned. Otherwise, there would be no way for the public to comment on the validity of our estimates.

Executive Order 13132, Federalism

The FAA has analyzed this final rule under the principles and criteria of Executive Order 13132, Federalism. We have determined that this action will not have a substantial direct effect on the States, on the relationship between the national Government and the States, or on the distribution of power and responsibilities among the various levels of government. Therefore, we determined that this final rule does not have federalism implications.

Environmental Analysis

FAA Order 1050.1D defines FAA actions that may be categorically excluded from preparation of a National Environmental Policy Act (NEPA) environmental impact statement. In accordance with FAA Order 1050.1D, appendix 4, paragraph 4(j), this rulemaking action qualifies for a categorical exclusion.

Energy Impact

The energy impact of this final rule has been assessed in accordance with the Energy Policy and Conservation Act (EPCA) and Public Law 94–163, as amended (42 U.S.C. 6362) and FAA Order 1053.1. It has been determined that the final rule is not a major regulatory action under the provisions of the EPCA.

Regulations Affecting Intrastate Aviation in Alaska

Section 1205 of the FAA Reauthorization Act of 1996 (110 Stat. 3213) requires the Administrator, when modifying regulations in Title 14 of the CFR in a manner affecting intrastate aviation in Alaska, to consider the extent to which Alaska is not served by transportation modes other than aviation, and to establish such regulatory distinctions as he or she considers appropriate. Because this final rule applies to the certification of future designs of transport category airplanes and their subsequent operation, it could affect intrastate aviation in Alaska. Because no comments were received regarding this regulation affecting intrastate aviation in Alaska, we will apply the rule in the same way that it is being applied nationally.

List of Subjects

14 CFR Part 25

Aircraft, Aviation safety, Reporting and recordkeeping requirements.

14 CFR Part 91

Aircraft, Aviation safety, Reporting and recordkeeping requirements.

14 CFR Part 121

Aircraft, Aviation safety, Reporting and recordkeeping requirements, Safety, Transportation

14 CFR Part 125

Aircraft, Aviation safety, Reporting and recordkeeping requirements.

14 CFR Part 135

Aircraft, Aviation safety, Reporting and recordkeeping requirements.

The Amendment

■ In consideration of the foregoing, the Federal Aviation Administration amends parts 25, 91, 121, 125, and 135 of Title 14, Code of Federal Regulations as follows:

PART 25—AIRWORTHINESS STANDARDS: TRANSPORT CATEGORY AIRPLANES

■ 1. The authority citation for part 25 continues to read as follows:

Authority: 49 U.S.C. 106(g), 40113, 44701–44702, and 44704.

■ 2. Add § 25.856 to read as follows:

§ 25.856 Thermal/Acoustic insulation materials.

(a) Thermal/acoustic insulation material installed in the fuselage must meet the flame propagation test requirements of part VI of Appendix F to this part, or other approved equivalent test requirements. This requirement does not apply to ''small parts,'' as defined in part I of Appendix F of this part.

(b) For airplanes with a passenger capacity of 20 or greater, thermal/acoustic insulation materials (including the means of fastening the materials to the fuselage) installed in the lower half of the airplane fuselage must meet the flame penetration resistance test requirements of part VII of Appendix F to this part, or other approved equivalent test requirements. This requirement does not apply to thermal/acoustic insulation installations that the FAA finds would not contribute to fire penetration resistance.

■ 3. Amend appendix F to part 25 as follows:

■ a. In part I, paragraph (a)(1)(ii), by removing the words ''thermal and acoustical insulation and insulation covering'' and ''insulation blankets'' from the first sentence.

■ b. In part I, by removing and reserving paragraph (a)(2)(i).

■ c. By adding parts VI and VII to read as follows:

Appendix F to Part 25—[Amended]

* * * * *

Part VI—Test Method To Determine the Flammability and Flame Propagation Characteristics of Thermal/Acoustic Insulation Materials

Use this test method to evaluate the flammability and flame propagation characteristics of thermal/acoustic insulation when exposed to both a radiant heat source and a flame.

(a) *Definitions.*

''Flame propagation'' means the furthest distance of the propagation of visible flame towards the far end of the test specimen, measured from the midpoint of the ignition source flame. Measure this distance after initially applying the ignition source and before all flame on the test specimen is extinguished. The measurement is not a determination of burn length made after the test.

''Radiant heat source'' means an electric or air propane panel.

''Thermal/acoustic insulation'' means a material or system of materials used to provide thermal and/or acoustic protection. Examples include fiberglass or other batting material encapsulated by a film covering and foams.

''Zero point'' means the point of application of the pilot burner to the test specimen.

(b) *Test apparatus.*

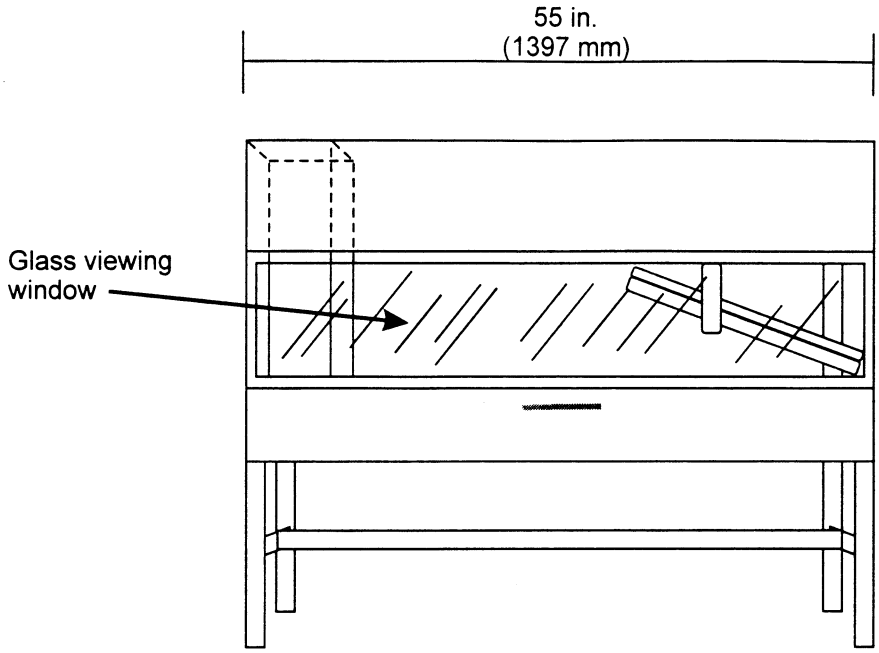

Figure 1 - Radiant Panel Test Chamber

(1) *Radiant panel test chamber.* Conduct tests in a radiant panel test chamber (see figure 1 above). Place the test chamber under an exhaust hood to facilitate clearing the chamber of smoke after each test. The radiant panel test chamber must be an enclosure 55 inches (1397 mm) long by 19.5 (495 mm) deep by 28 (710 mm) to 30 inches (maximum) (762 mm) above the test specimen. Insulate the sides, ends, and top with a fibrous ceramic insulation, such as Kaowool M™ board. On the front side, provide a 52 by 12-inch (1321 by 305 mm) draft-free, high-temperature, glass window for viewing the sample during testing. Place a door below the window to provide access to the movable specimen platform holder. The bottom of the test chamber must be a sliding steel platform that has provision for securing the test specimen holder in a fixed and level position. The chamber must have an internal chimney with exterior dimensions of 5.1 inches (129 mm) wide, by 16.2 inches (411 mm) deep by 13 inches (330 mm) high at the opposite end of the chamber from the radiant energy source. The interior dimensions must be 4.5 inches (114 mm) wide by 15.6 inches (395 mm) deep. The chimney must extend to the top of the chamber (see figure 2).

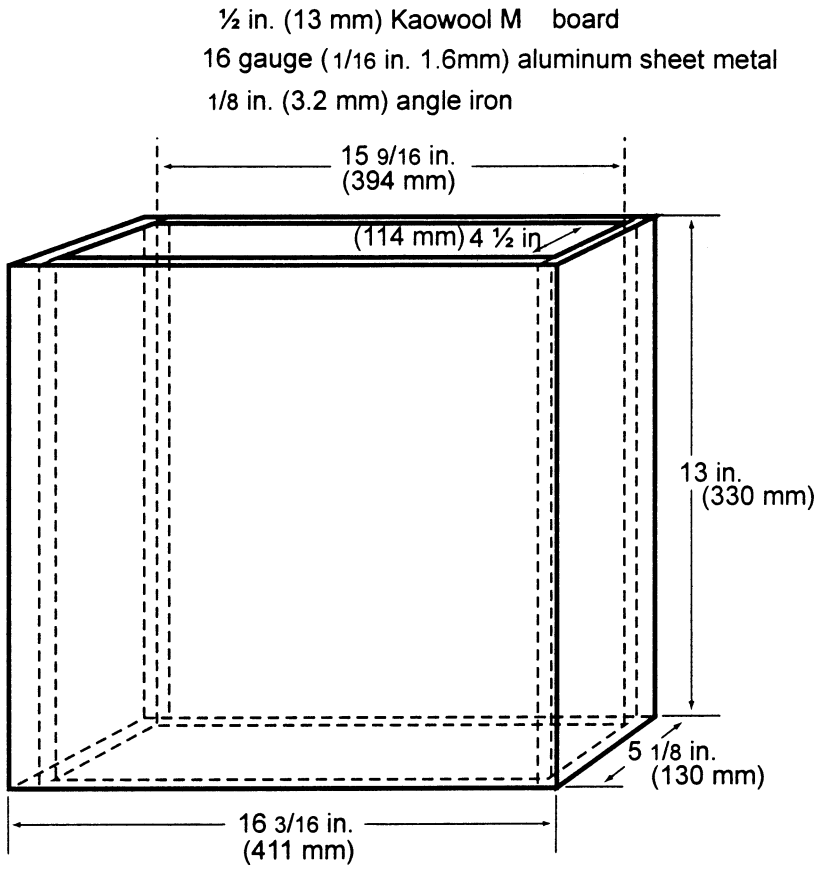

Figure 2 - Internal Chimney

(2) *Radiant heat source.* Mount the radiant heat energy source in a cast iron frame or equivalent. An electric panel must have six, 3-inch wide emitter strips. The emitter strips must be perpendicular to the length of the panel. The panel must have a radiation surface of 12⅞ by 18½ inches (327 by 470 mm). The panel must be capable of operating at temperatures up to 1300°F (704°C). An air propane panel must be made of a porous refractory material and have a radiation surface of 12 by 18 inches (305 by 457 mm). The panel must be capable of operating at temperatures up to 1,500°F (816°C). *See* figures 3a and 3b.

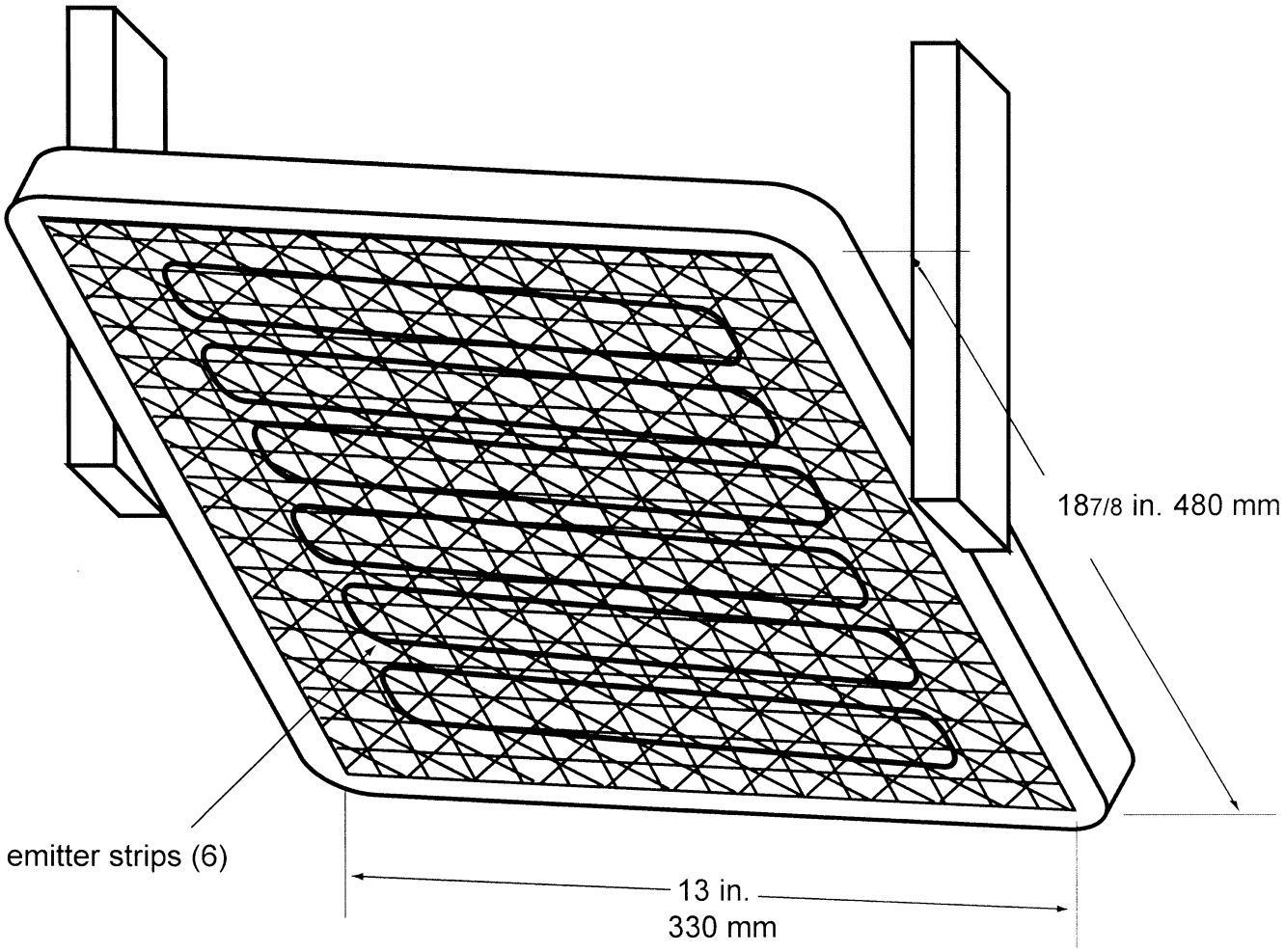

Figure 3a – Electric Panel

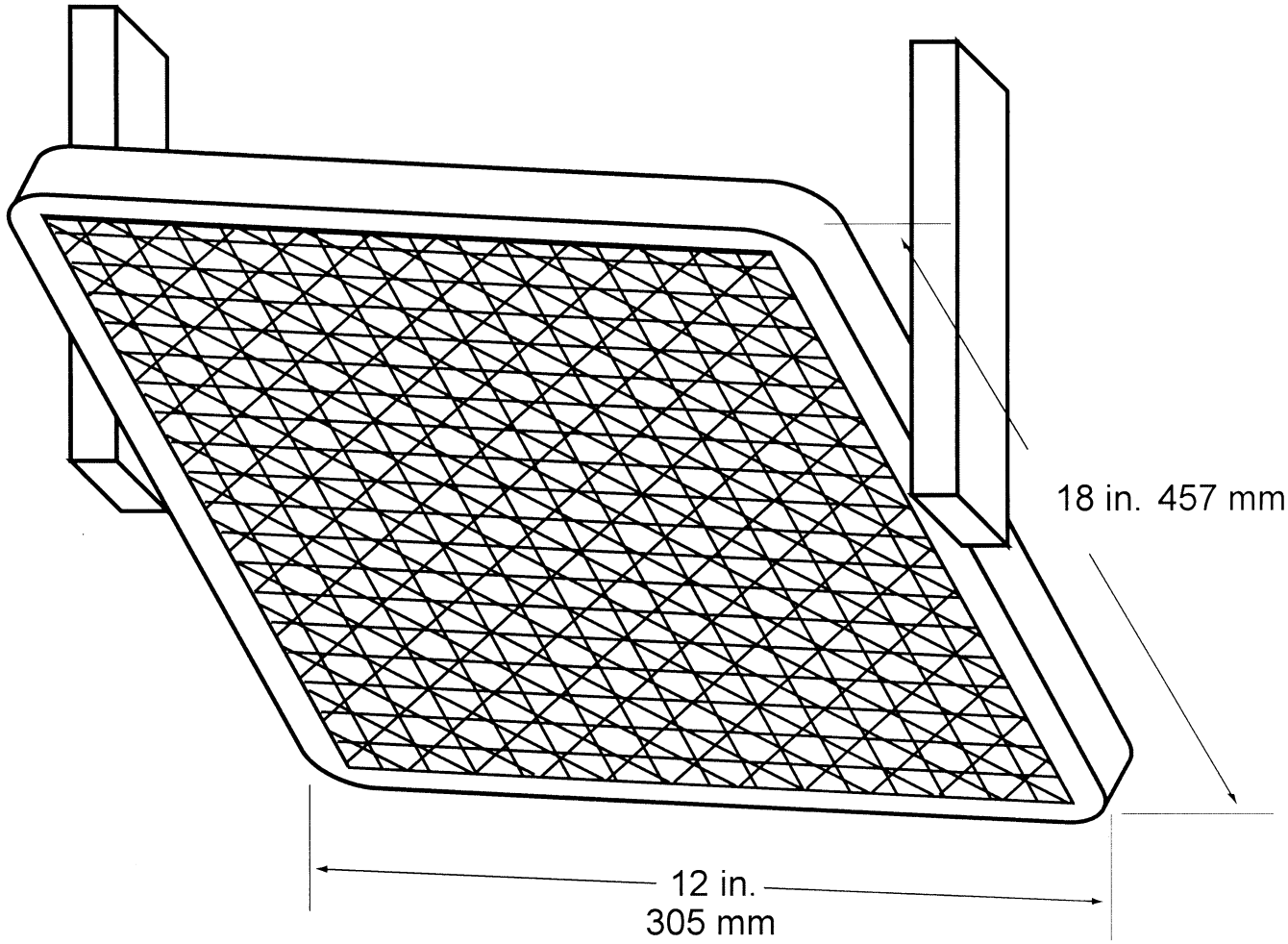

Figure 3b – Air Propane Radiant Panel

(i) *Electric radiant panel.* The radiant panel must be 3-phase and operate at 208 volts. A single-phase, 240 volt panel is also acceptable. Use a solid-state power controller and microprocessor-based controller to set the electric panel operating parameters.

(ii) *Gas radiant panel.* Use propane (liquid petroleum gas—2.1 UN 1075) for the radiant panel fuel. The panel fuel system must consist of a venturi-type aspirator for mixing gas and air at approximately atmospheric pressure. Provide suitable instrumentation for monitoring and controlling the flow of fuel and air to the panel. Include an air flow gauge, an air flow regulator, and a gas pressure gauge.

(iii) *Radiant panel placement.* Mount the panel in the chamber at 30° to the horizontal specimen plane, and 7½ inches above the zero point of the specimen.

(3) *Specimen holding system.*

(i) The sliding platform serves as the housing for test specimen placement. Brackets may be attached (via wing nuts) to the top lip of the platform in order to accommodate various thicknesses of test specimens. Place the test specimens on a sheet of Kaowool M™ board or 1260 Standard Board (manufactured by Thermal Ceramics and available in Europe), or equivalent, either resting on the bottom lip of the sliding platform or on the base of the brackets. It may be necessary to use multiple sheets of material based on the thickness of the test specimen (to meet the sample height requirement). Typically, these non-combustible sheets of material are available in ¼ inch (6 mm) thicknesses. See figure 4. A sliding platform that is deeper than the 2-inch (50.8mm) platform shown in figure 4 is also acceptable as long as the sample height requirement is met.

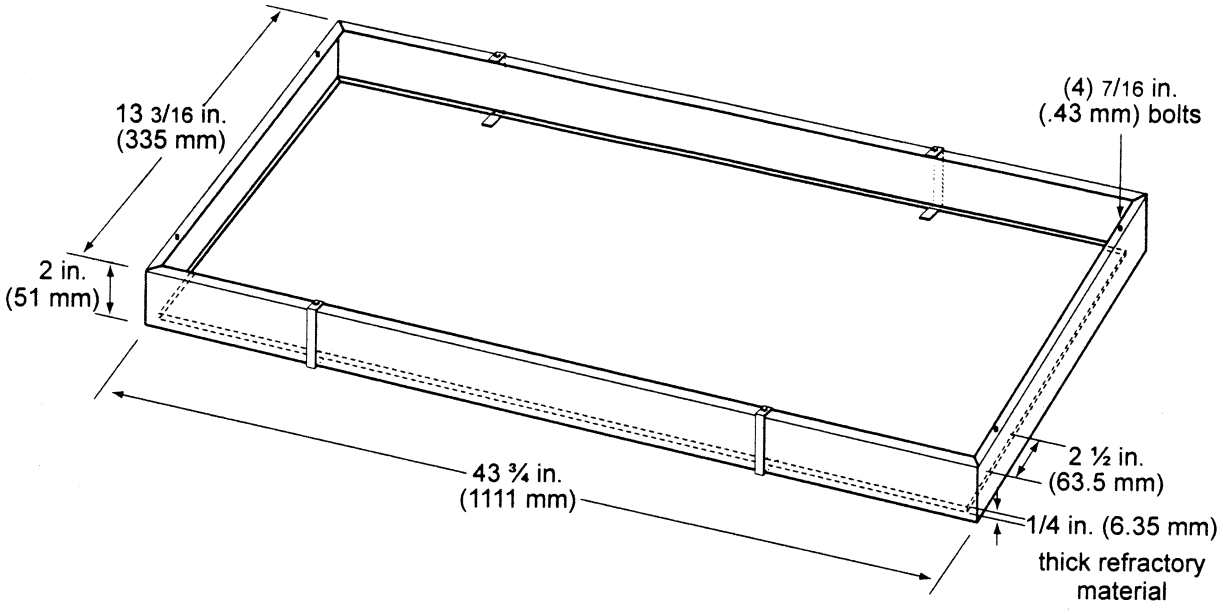

Figure 4 - Sliding Platform

(ii) Attach a ½ inch (13 mm) piece of Kaowool M™ board or other high temperature material measuring 41½ by 8¼ inches (1054 by 210 mm) to the back of the platform. This board serves as a heat retainer and protects the test specimen from excessive preheating. The height of this board must not impede the sliding platform movement (in and out of the test chamber). If the platform has been fabricated such that the back side of the platform is high enough to prevent excess preheating of the specimen when the sliding platform is out, a retainer board is not necessary.

(iii) Place the test specimen horizontally on the non-combustible board(s). Place a steel retaining/securing frame fabricated of mild steel, having a thickness of ⅛ inch (3.2 mm) and overall dimensions of 23 by 13⅛ inches (584 by 333 mm) with a specimen opening of 19 by 10¾ inches (483 by 273 mm) over the test specimen. The front, back, and right portions of the top flange of the frame must rest on the top of the sliding platform, and the bottom flanges must pinch all 4 sides of the test specimen. The right bottom flange must be flush with the sliding platform. See figure 5.

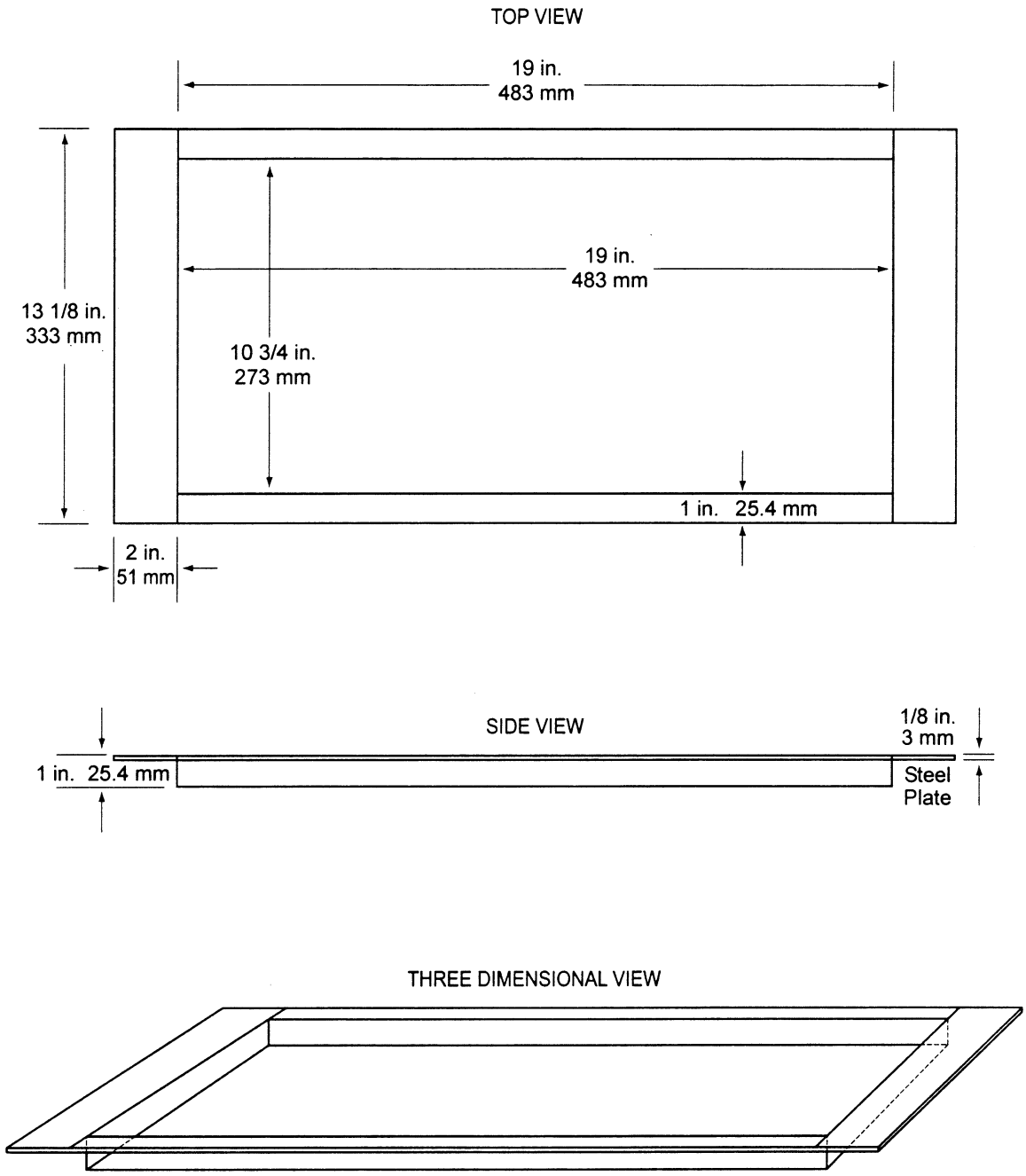

Figure 5: 3 views

(4) *Pilot Burner.* The pilot burner used to ignite the specimen must be a Bernzomatic™ commercial propane venturi torch with an axially symmetric burner tip and a propane supply tube with an orifice diameter of 0.006 inches (0.15 mm). The length of the burner tube must be 2⅞ inches (71 mm). The propane flow must be adjusted via gas pressure through an in-line regulator to produce a blue inner cone length of ¾ inch (19 mm). A ¾ inch (19 mm) guide (such as a thin strip of metal) may be soldered to the top of the burner to aid in setting the flame height. The overall flame length must be approximately 5 inches long (127 mm). Provide a way to move the burner out of the ignition position so that the flame is horizontal and at least 2 inches (50 mm) above the specimen plane. See figure 6.

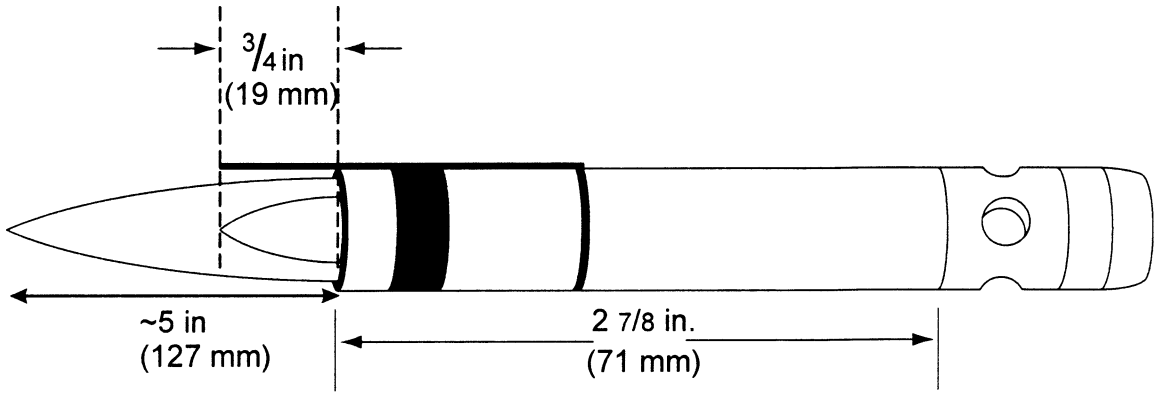

Figure 6 – Propane Pilot Burner

(5) *Thermocouples.* Install a 24 American Wire Gauge (AWG) Type K (Chromel-Alumel) thermocouple in the test chamber for temperature monitoring. Insert it into the chamber through a small hole drilled through the back of the chamber. Place the thermocouple so that it extends 11 inches (279 mm) out from the back of the chamber wall, 11½ inches (292 mm) from the right side of the chamber wall, and is 2 inches (51 mm) below the radiant panel. The use of other thermocouples is optional.

(6) *Calorimeter.* The calorimeter must be a one-inch cylindrical water-cooled, total heat flux density, foil type Gardon Gage that has a range of 0 to 5 BTU/ft^2-second (0 to 5.7 Watts/cm^2).

(7) *Calorimeter calibration specification and procedure.*

(i) *Calorimeter specification.*

(A) Foil diameter must be 0.25 +/−0.005 inches (6.35 +/−0.13 mm).

(B) Foil thickness must be 0.0005 +/−0.0001 inches (0.013 +/−;0.0025 mm).

(C) Foil material must be thermocouple grade Constantan.

(D) Temperature measurement must be a Copper Constantan thermocouple.

(E) The copper center wire diameter must be 0.0005 inches (0.013 mm).

(F) The entire face of the calorimeter must be lightly coated with ''Black Velvet'' paint having an emissivity of 96 or greater.

(ii) *Calorimeter calibration.*

(A) The calibration method must be by comparison to a like standardized transducer.

(B) The standardized transducer must meet the specifications given in paragraph VI(b)(6) of this appendix.

(C) Calibrate the standard transducer against a primary standard traceable to the National Institute of Standards and Technology (NIST).

(D) The method of transfer must be a heated graphite plate.

(E) The graphite plate must be electrically heated, have a clear surface area on each side of the plate of at least 2 by 2 inches (51 by 51 mm), and be ⅛ inch +/−1/16 inch thick (3.2 +/−1.6 mm).

(F) Center the 2 transducers on opposite sides of the plates at equal distances from the plate.

(G) The distance of the calorimeter to the plate must be no less than 0.0625 inches (1.6 mm), nor greater than 0.375 inches (9.5 mm).

(H) The range used in calibration must be at least 0–3.5 BTUs/ft^2 second (0–3.9 Watts/cm^2) and no greater than 0–5.7 BTUs/ft^2 second (0–6.4 Watts/cm^2).

(I) The recording device used must record the 2 transducers simultaneously or at least within 1/10 of each other.

(8) *Calorimeter fixture.* With the sliding platform pulled out of the chamber, install the calorimeter holding frame and place a sheet of non-combustible material in the bottom of the sliding platform adjacent to the holding frame. This will prevent heat losses during calibration. The frame must be 13⅛ inches (333 mm) deep (front to back) by 8 inches (203 mm) wide and must rest on the top of the sliding platform. It must be fabricated of ⅛ inch (3.2 mm) flat stock steel and have an opening that accommodates a ½ inch (12.7 mm) thick piece of refractory board, which is level with the top of the sliding platform. The board must have three 1-inch (25.4 mm) diameter holes drilled through the board for calorimeter insertion. The distance to the radiant panel surface from the centerline of the first hole (''zero'' position) must be 7½ +/−⅛ inches (191 +/−3 mm). The distance between the centerline of the first hole to the centerline of the second hole must be 2 inches (51 mm). It must also be the same distance from the centerline of the second hole to the centerline of the third hole. *See* figure 7. A calorimeter holding frame that differs in construction is acceptable as long as the height from the centerline of the first hole to the radiant panel and the distance between holes is the same as described in this paragraph.

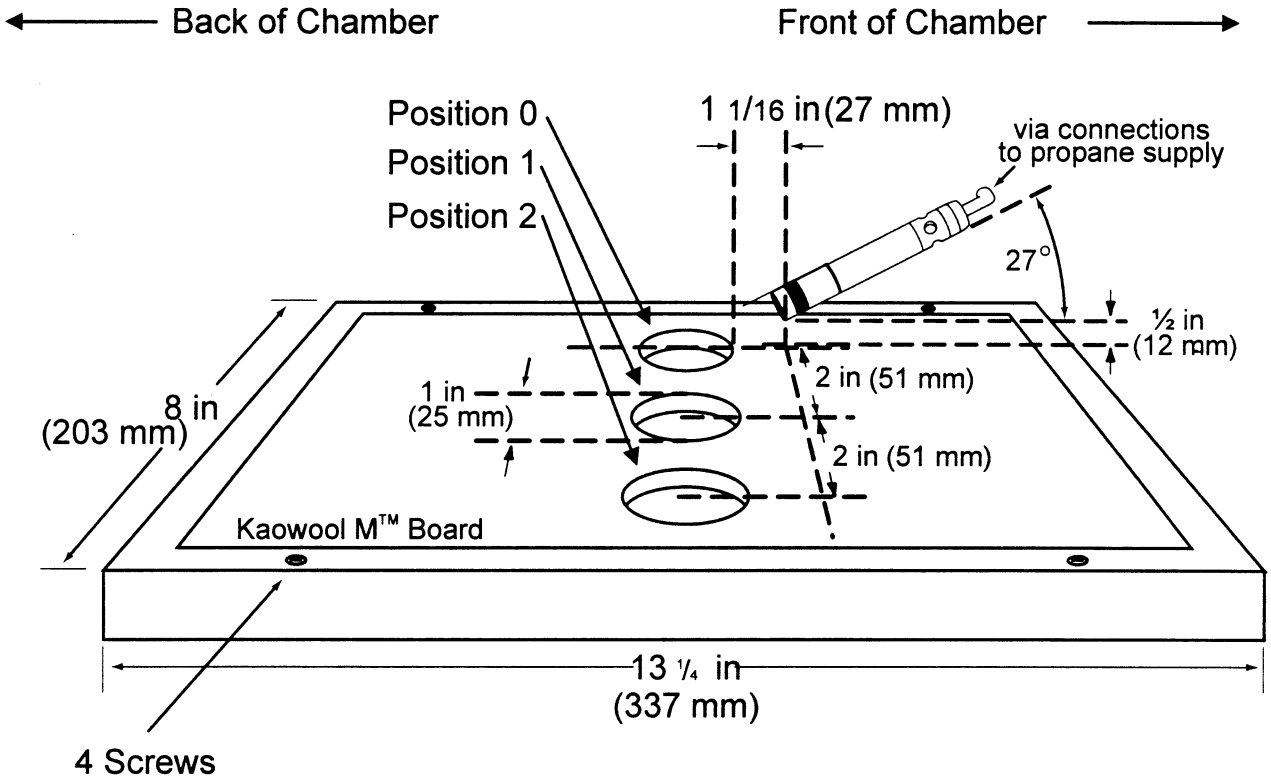

Figure 7 - Calorimeter Holding Frame

(9) *Instrumentation.* Provide a calibrated recording device with an appropriate range or a computerized data acquisition system to measure and record the outputs of the calorimeter and the thermocouple. The data acquisition system must be capable of recording the calorimeter output every second during calibration.

(10) *Timing device.* Provide a stopwatch or other device, accurate to +/−1 second/hour, to measure the time of application of the pilot burner flame.

(c) *Test specimens.*

(1) *Specimen preparation.* Prepare and test a minimum of three test specimens. If an oriented film cover material is used, prepare and test both the warp and fill directions.

(2) *Construction.* Test specimens must include all materials used in construction of the insulation (including batting, film, scrim, tape *etc.*). Cut a piece of core material such as foam or fiberglass, and cut a piece of film cover material (if used) large enough to cover the core material. Heat sealing is the preferred method of preparing fiberglass samples, since they can be made without compressing the fiberglass (''box sample''). Cover materials that are not heat sealable may be stapled, sewn, or taped as long as the cover material is over-cut enough to be drawn down the sides without compressing the core material. The fastening means should be as continuous as possible along the length of the seams. The specimen thickness must be of the same thickness as installed in the airplane.

(3) *Specimen Dimensions.* To facilitate proper placement of specimens in the sliding platform housing, cut non-rigid core materials, such as fiberglass, 12½ inches (318mm) wide by 23 inches (584mm) long. Cut rigid materials, such as foam, 11½ +/−¼ inches (292 mm +/−6mm) wide by 23 inches (584mm) long in order to fit properly in the sliding platform housing and provide a flat, exposed surface equal to the opening in the housing.

(d) *Specimen conditioning.* Condition the test specimens at 70 +/-5°F (21 +/−2°C) and 55% +/−10% relative humidity, for a minimum of 24 hours prior to testing.

(e) *Apparatus Calibration.*

(1) With the sliding platform out of the chamber, install the calorimeter holding frame. Push the platform back into the chamber and insert the calorimeter into the first hole (''zero'' position). *See* figure 7. Close the bottom door located below the sliding platform. The distance from the centerline of the calorimeter to the radiant panel surface at this point must be 7.½ inches +/−⅛ (191 mm +/−3). Prior to igniting the radiant panel, ensure that the calorimeter face is clean and that there is water running through the calorimeter.

(2) Ignite the panel. Adjust the fuel/air mixture to achieve 1.5 BTUs/ft²-second +/−5% (1.7 Watts/cm² +/−5%) at the ''zero'' position. If using an electric panel, set the power controller to achieve the proper heat flux. Allow the unit to reach steady state (this may take up to 1 hour). The pilot burner must be off and in the down position during this time.

(3) After steady-state conditions have been reached, move the calorimeter 2 inches (51 mm) from the ''zero'' position (first hole) to position 1 and record the heat flux. Move the calorimeter to position 2 and record the heat flux. Allow enough time at each position for the calorimeter to stabilize. Table 1 depicts typical calibration values at the three positions.

TABLE 1.—CALIBRATION TABLE

Position	BTU's/ft²sec	Watts/cm²
''Zero'' Position	1.5	1.7
Position 1	1.51–1.50–1.49	1.71–1.70–1.69
Position 2	1.43–1.44	1.62–1.63

(4) Open the bottom door, remove the calorimeter and holder fixture. Use caution as the fixture is very hot.

(f) *Test Procedure.*

(1) Ignite the pilot burner. Ensure that it is at least 2 inches (51 mm) above the top of the platform. The burner must not contact the specimen until the test begins.

(2) Place the test specimen in the sliding platform holder. Ensure that the test sample surface is level with the top of the platform. At ''zero'' point, the specimen surface must be 7½ inches +/−⅛ inch (191 mm +/−3) below the radiant panel.

(3) Place the retaining/securing frame over the test specimen. It may be necessary (due to compression) to adjust the sample (up or down) in order to maintain the distance from the sample to the radiant panel (7½ inches +/−⅛ inch (191 mm+/−3) at ''zero'' position). With film/fiberglass assemblies, it is critical to make a slit in the film cover to purge any air inside. This allows the operator to maintain the proper test specimen position (level with the top of the platform) and to allow ventilation of gases during testing. A longitudinal slit, approximately 2 inches (51mm) in length, must be centered 3 inches +/−½ inch (76mm+/−13mm) from the left flange of the securing frame. A utility knife is acceptable for slitting the film cover.

(4) Immediately push the sliding platform into the chamber and close the bottom door.

(5) Bring the pilot burner flame into contact with the center of the specimen at the ''zero'' point and simultaneously start the timer. The pilot burner must be at a 27° angle with the sample and be approximately ½ inch (12 mm) above the sample. *See* figure 7. A stop, as shown in figure 8, allows the operator to position the burner correctly each time.

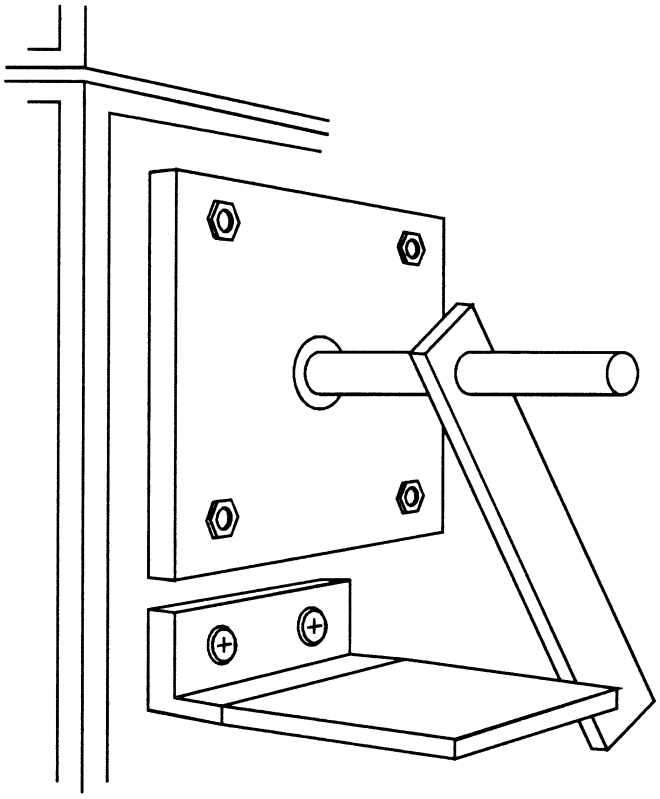

Figure 8 - Propane Burner Stop

(6) Leave the burner in position for 15 seconds and then remove to a position at least 2 inches (51 mm) above the specimen.

(g) Report.

(1) Identify and describe the test specimen.

(2) Report any shrinkage or melting of the test specimen.

(3) Report the flame propagation distance. If this distance is less than 2 inches, report this as a pass (no measurement required).

(4) Report the after-flame time.

(h) *Requirements.*

(1) There must be no flame propagation beyond 2 inches (51 mm) to the left of the centerline of the pilot flame application.

(2) The flame time after removal of the pilot burner may not exceed 3 seconds on any specimen.

Part VII—Test Method To Determine the Burnthrough Resistance of Thermal/Acoustic Insulation Materials

Use the following test method to evaluate the burnthrough resistance characteristics of aircraft thermal/acoustic insulation materials when exposed to a high intensity open flame.

(a) *Definitions.*

Burnthrough time means the time, in seconds, for the burner flame to penetrate the test specimen, and/or the time required for the heat flux to reach 2.0 Btu/ft^{2}sec (2.27 W/cm^2) on the inboard side, at a distance of 12 inches (30.5 cm) from the front surface of the insulation blanket test frame, whichever is sooner. The burnthrough time is measured at the inboard side of each of the insulation blanket specimens.

Insulation blanket specimen means one of two specimens positioned in either side of

the test rig, at an angle of 30° with respect to vertical.

Specimen set means two insulation blanket specimens. Both specimens must represent the same production insulation blanket construction and materials, proportioned to correspond to the specimen size.

(b) *Apparatus.*

(1) The arrangement of the test apparatus is shown in figures 1 and 2 and must include the capability of swinging the burner away from the test specimen during warm-up.

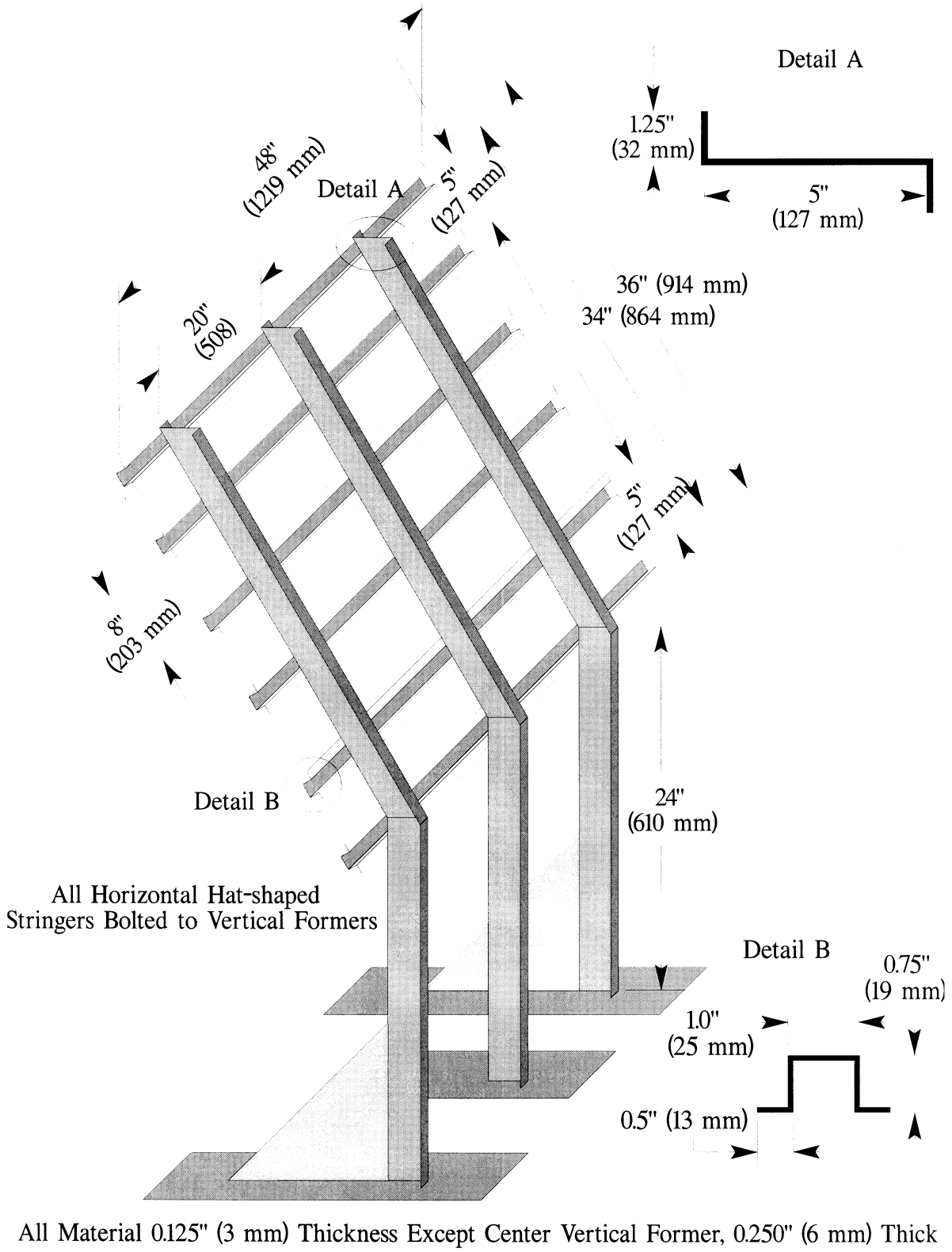

Figure 1 - Burnthrough Test Apparatus Specimen Holder

(2) *Test burner.* The test burner must be a modified gun-type such as the Park Model DPL 3400. Flame characteristics are highly dependent on actual burner setup. Parameters such as fuel pressure, nozzle depth, stator position, and intake airflow must be properly adjusted to achieve the correct flame output.

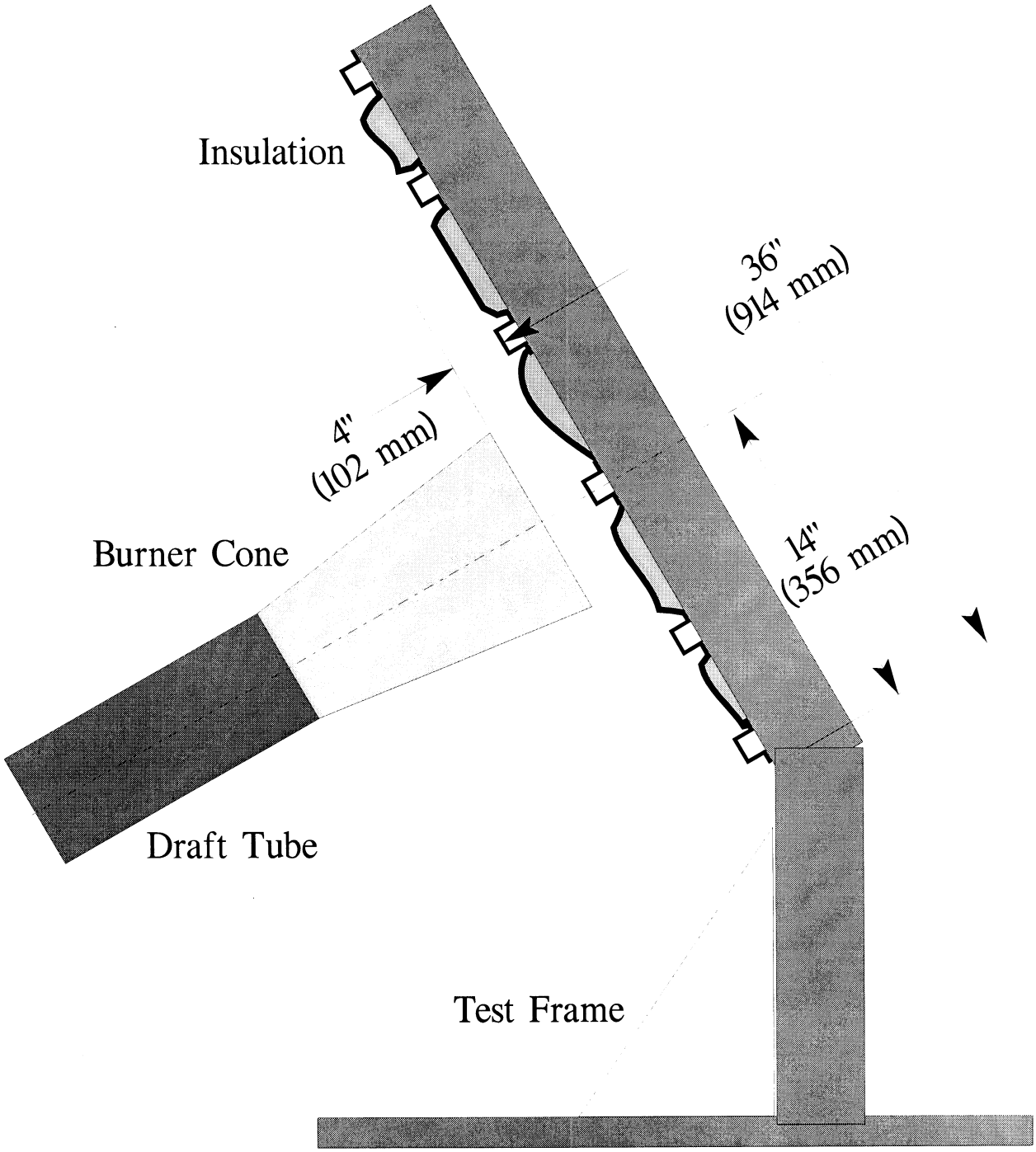

Figure 2 – Burnthrough Test Apparatus

(i) *Nozzle.* A nozzle must maintain the fuel pressure to yield a nominal 6.0 gal/hr (0.378 L/min) fuel flow. A Monarch-manufactured 80° PL (hollow cone) nozzle nominally rated at 6.0 gal/hr at 100 lb/in^2 (0.71 MPa) delivers a proper spray pattern.

(ii) *Fuel Rail.* The fuel rail must be adjusted to position the fuel nozzle at a depth of 0.3125 inch (8 mm) from the end plane of the exit stator, which must be mounted in the end of the draft tube.

(iii) *Internal Stator.* The internal stator, located in the middle of the draft tube, must be positioned at a depth of 3.75 inches (95 mm) from the tip of the fuel nozzle. The stator must also be positioned such that the integral igniters are located at an angle midway between the 10 and 11 o'clock position, when viewed looking into the draft tube. Minor deviations to the igniter angle are acceptable if the temperature and heat flux requirements conform to the requirements of paragraph VII(e) of this appendix.

(iv) *Blower Fan.* The cylindrical blower fan used to pump air through the burner must measure 5.25 inches (133 mm) in diameter by 3.5 inches (89 mm) in width.

(v) *Burner cone.* Install a 12 +0.125-inch (305 ±3 mm) burner extension cone at the end of the draft tube. The cone must have an opening 6 ±0.125-inch (152 ±3 mm) high and 11 ±0.125-inch (280 ±3 mm) wide (see figure 3).

(vi) *Fuel.* Use JP–8, Jet A, or their international equivalent, at a flow rate of 6.0 ±0.2 gal/hr (0.378 ±0.0126 L/min). If this fuel is unavailable, ASTM K2 fuel (Number 2 grade kerosene) or ASTM D2 fuel (Number 2 grade fuel oil or Number 2 diesel fuel) are acceptable if the nominal fuel flow rate, temperature, and heat flux measurements conform to the requirements of paragraph VII(e) of this appendix.

(vii) *Fuel pressure regulator.* Provide a fuel pressure regulator, adjusted to deliver a nominal 6.0 gal/hr (0.378 L/min) flow rate. An operating fuel pressure of 100 lb/in^2 (0.71 MPa) for a nominally rated 6.0 gal/hr 80° spray angle nozzle (such as a PL type) delivers 6.0 ±0.2 gal/hr (0.378 ±0.0126 L/min).

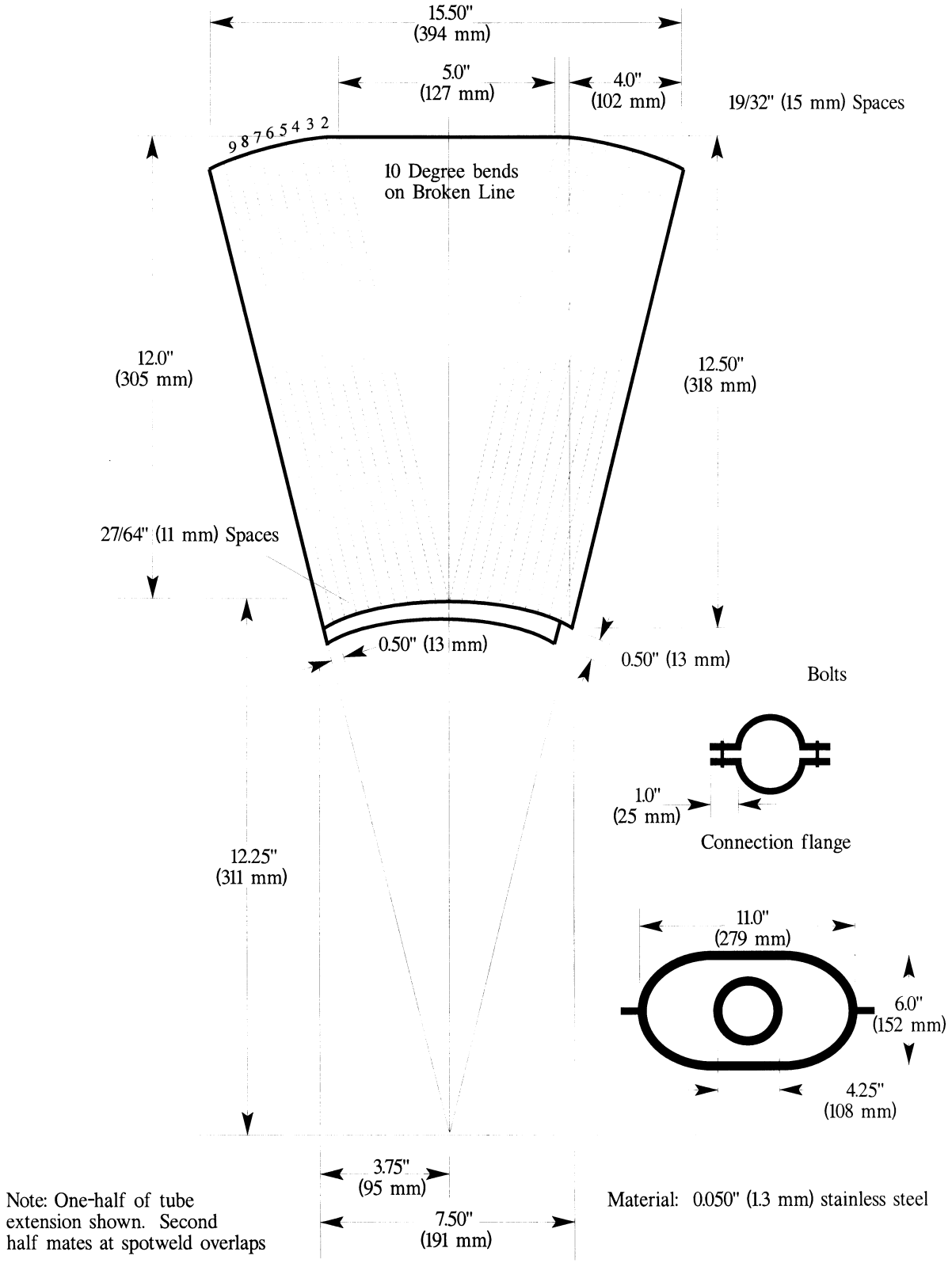

Figure 3 – Burner Draft Tube Extension Cone Diagram

(3) *Calibration rig and equipment.*

(i) Construct individual calibration rigs to incorporate a calorimeter and thermocouple rake for the measurement of heat flux and temperature. Position the calibration rigs to allow movement of the burner from the test rig position to either the heat flux or temperature position with minimal difficulty.

(ii) *Calorimeter.* The calorimeter must be a total heat flux, foil type Gardon Gage of an appropriate range such as 0–20 Btu/ft ^{2}-sec (0–22.7 W/cm ^{2}), accurate to ±3% of the indicated reading. The heat flux calibration method must be in accordance with paragraph VI(b)(7) of this appendix.

(iii) *Calorimeter mounting.* Mount the calorimeter in a 6- by 12- ±0.125 inch (152- by 305- ±3 mm) by 0.75 ±0.125 inch (19 mm ±3 mm) thick insulating block which is attached to the heat flux calibration rig during calibration (figure 4). Monitor the insulating block for deterioration and replace it when necessary. Adjust the mounting as necessary to ensure that the calorimeter face is parallel to the exit plane of the test burner cone.

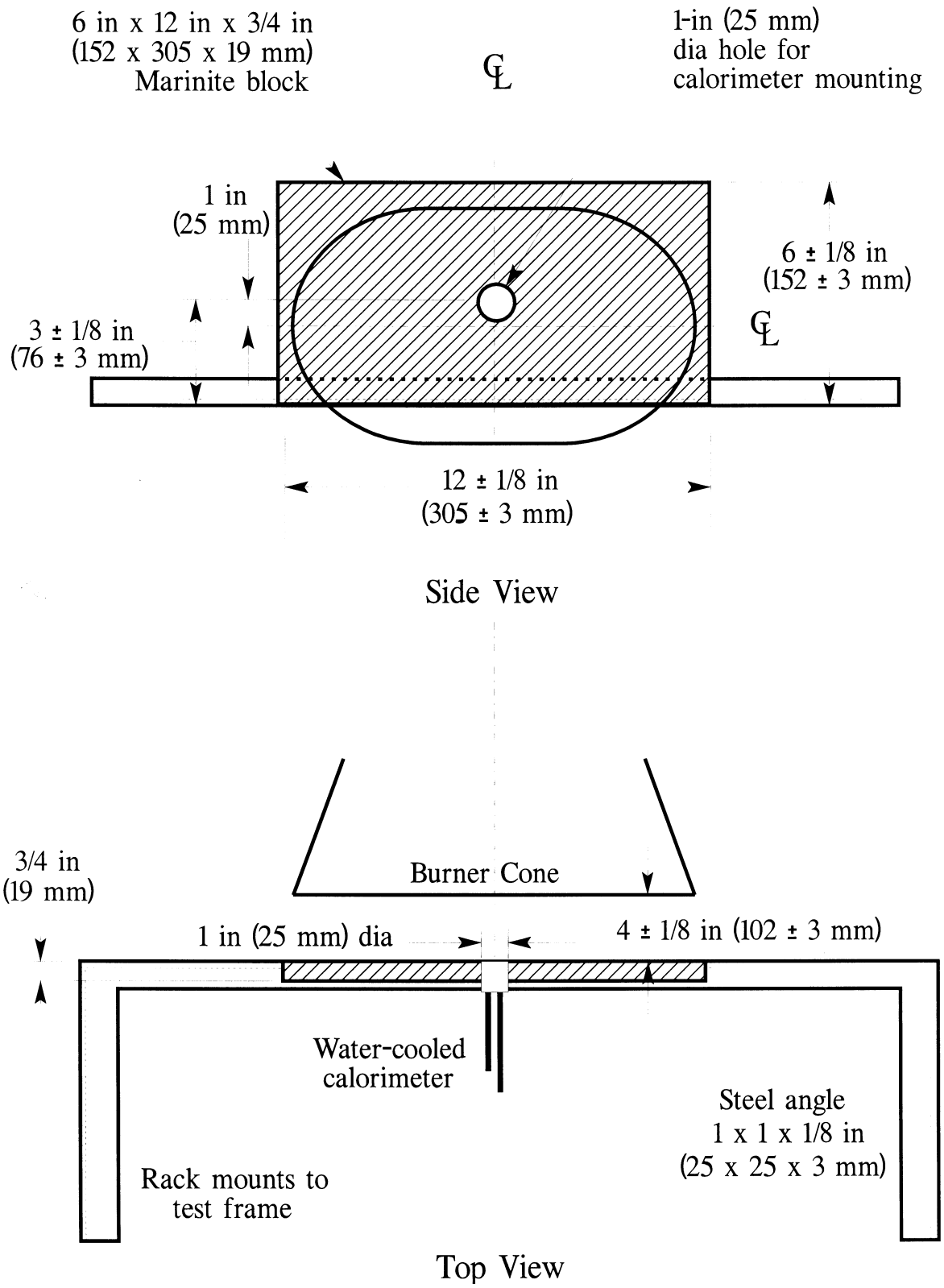

Figure 4 - Calorimeter Position Relative to Burner Cone

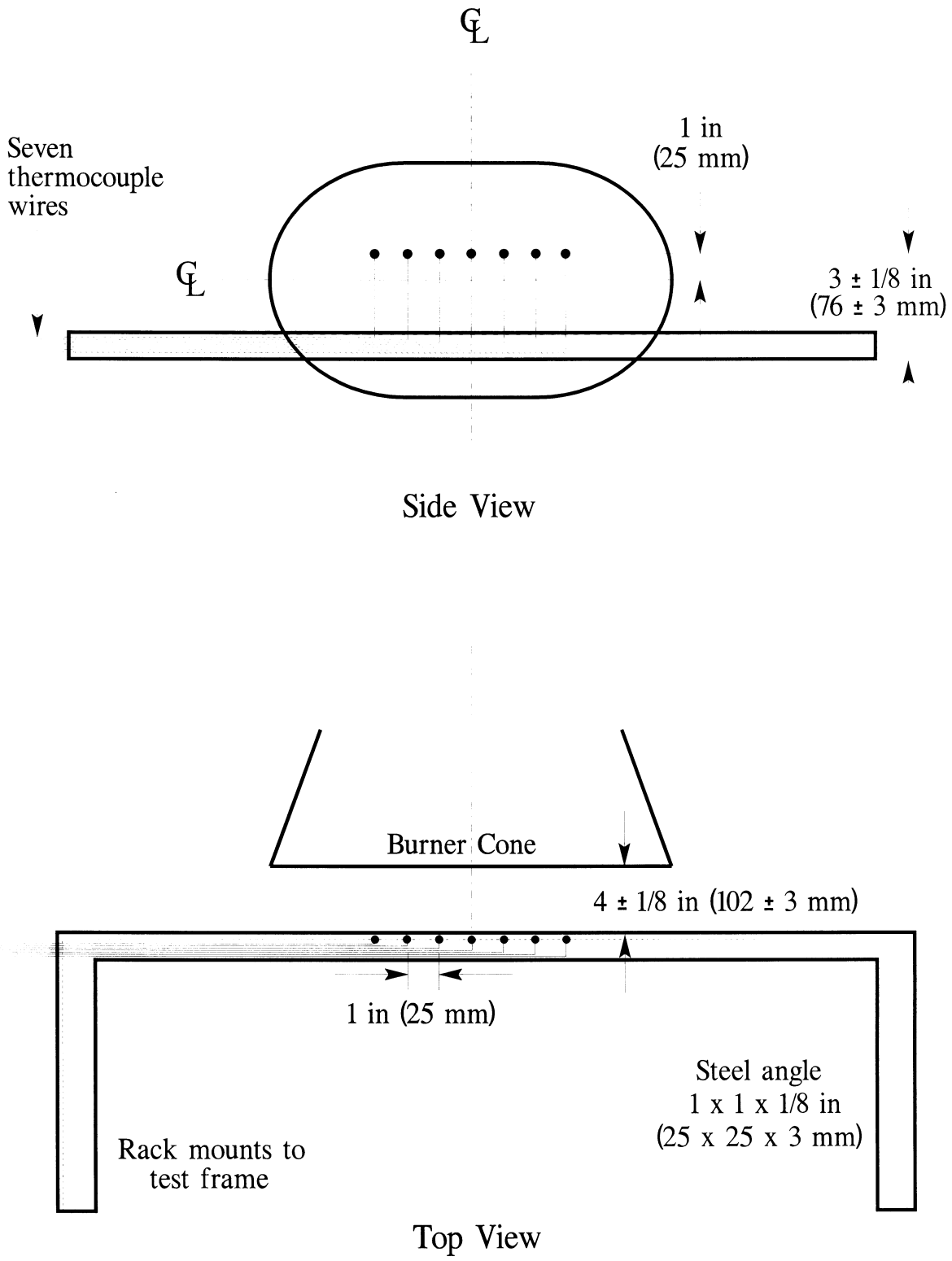

Figure 5 – Thermocouple Rake Position Relative to Burner Cone

(iv) *Thermocouples.* Provide seven ⅛-inch (3.2 mm) ceramic packed, metal sheathed, type K (Chromel-alumel), grounded junction thermocouples with a nominal 24 American Wire Gauge (AWG) size conductor for calibration. Attach the thermocouples to a steel angle bracket to form a thermocouple rake for placement in the calibration rig during burner calibration (figure 5).

(v) *Air velocity meter.* Use a vane-type air velocity meter to calibrate the velocity of air entering the burner. An Omega Engineering Model HH30A is satisfactory. Use a suitable adapter to attach the measuring device to the inlet side of the burner to prevent air from entering the burner other than through the measuring device, which would produce erroneously low readings. Use a flexible duct, measuring 4 inches wide (102 mm) by 20 feet long (6.1 meters), to supply fresh air to the burner intake to prevent damage to the air velocity meter from ingested soot. An optional airbox permanently mounted to the burner intake area can effectively house the air velocity meter and provide a mounting port for the flexible intake duct.

(4) *Test specimen mounting frame.* Make the mounting frame for the test specimens of ⅛-inch (3.2 mm) thick steel as shown in figure 1, except for the center vertical former, which should be ¼-inch (6.4 mm) thick to minimize warpage. The specimen mounting frame stringers (horizontal) should be bolted to the test frame formers (vertical) such that the expansion of the stringers will not cause the entire structure to warp. Use the mounting frame for mounting the two insulation blanket test specimens as shown in figure 2.

(5) *Backface calorimeters.* Mount two total heat flux Gardon type calorimeters behind the insulation test specimens on the back side (cold) area of the test specimen mounting frame as shown in figure 6. Position the calorimeters along the same plane as the burner cone centerline, at a distance of 4 inches (102 mm) from the vertical centerline of the test frame.

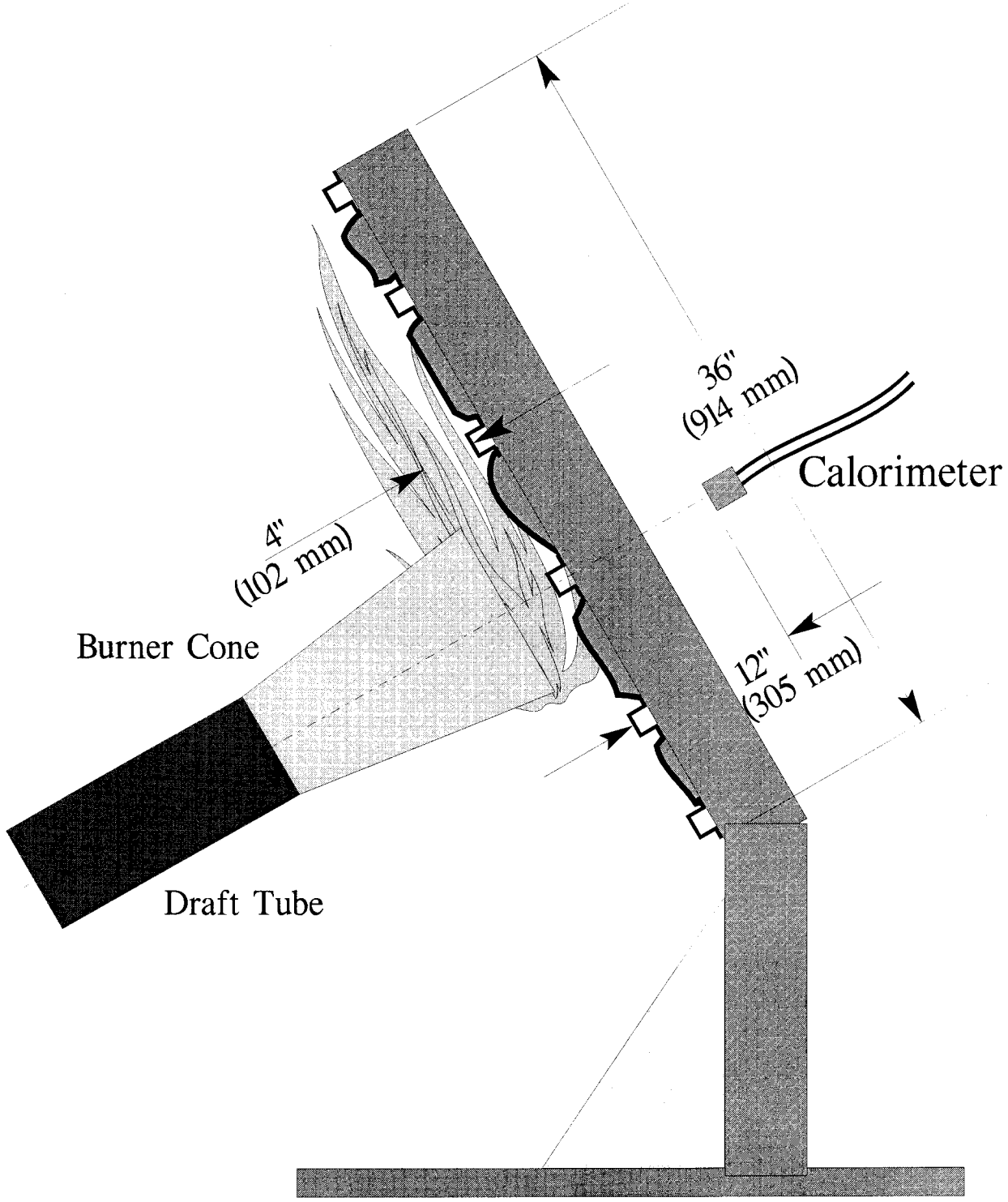

Figure 6 - . Position of Backface Calorimeters Relative to Test Specimen Frame

(i) The calorimeters must be a total heat flux, foil type Gardon Gage of an appropriate range such as 0–5 Btu/ft²-sec (0–5.7 W/cm²), accurate to ±3% of the indicated reading. The heat flux calibration method must comply with paragraph VI(b)(7) of this appendix.

(6) *Instrumentation.* Provide a recording potentiometer or other suitable calibrated instrument with an appropriate range to measure and record the outputs of the calorimeter and the thermocouples.

(7) *Timing device.* Provide a stopwatch or other device, accurate to ±1%, to measure the time of application of the burner flame and burnthrough time.

(8) *Test chamber.* Perform tests in a suitable chamber to reduce or eliminate the possibility of test fluctuation due to air movement. The chamber must have a minimum floor area of 10 by 10 feet (305 by 305 cm).

(i) *Ventilation hood.* Provide the test chamber with an exhaust system capable of removing the products of combustion expelled during tests.

(c) *Test Specimens.*

(1) *Specimen preparation.* Prepare a minimum of three specimen sets of the same construction and configuration for testing.

(2) *Insulation blanket test specimen.*

(i) For batt-type materials such as fiberglass, the constructed, finished blanket specimen assemblies must be 32 inches wide by 36 inches long (81.3 by 91.4 cm), exclusive of heat sealed film edges.

(ii) For rigid and other non-conforming types of insulation materials, the finished test specimens must fit into the test rig in such a manner as to replicate the actual in-service installation.

(3) *Construction.* Make each of the specimens tested using the principal components (*i.e.*, insulation, fire barrier material if used, and moisture barrier film) and assembly processes (representative seams and closures).

(i) *Fire barrier material.* If the insulation blanket is constructed with a fire barrier material, place the fire barrier material in a manner reflective of the installed arrangement For example, if the material will be placed on the outboard side of the insulation material, inside the moisture film, place it the same way in the test specimen.

(ii) *Insulation material.* Blankets that utilize more than one variety of insulation (composition, density, etc.) must have specimen sets constructed that reflect the insulation combination used. If, however, several blanket types use similar insulation combinations, it is not necessary to test each combination if it is possible to bracket the various combinations.

(iii) *Moisture barrier film.* If a production blanket construction utilizes more than one type of moisture barrier film, perform separate tests on each combination. For example, if a polyimide film is used in conjunction with an insulation in order to enhance the burnthrough capabilities, also test the same insulation when used with a polyvinyl fluoride film.

(iv) *Installation on test frame.* Attach the blanket test specimens to the test frame using 12 steel spring type clamps as shown in figure 7. Use the clamps to hold the blankets in place in both of the outer vertical formers, as well as the center vertical former (4 clamps per former). The clamp surfaces should measure 1 inch by 2 inches (25 by 51 mm). Place the top and bottom clamps 6 inches (15.2 cm) from the top and bottom of the test frame, respectively. Place the middle clamps 8 inches (20.3 cm) from the top and bottom clamps.

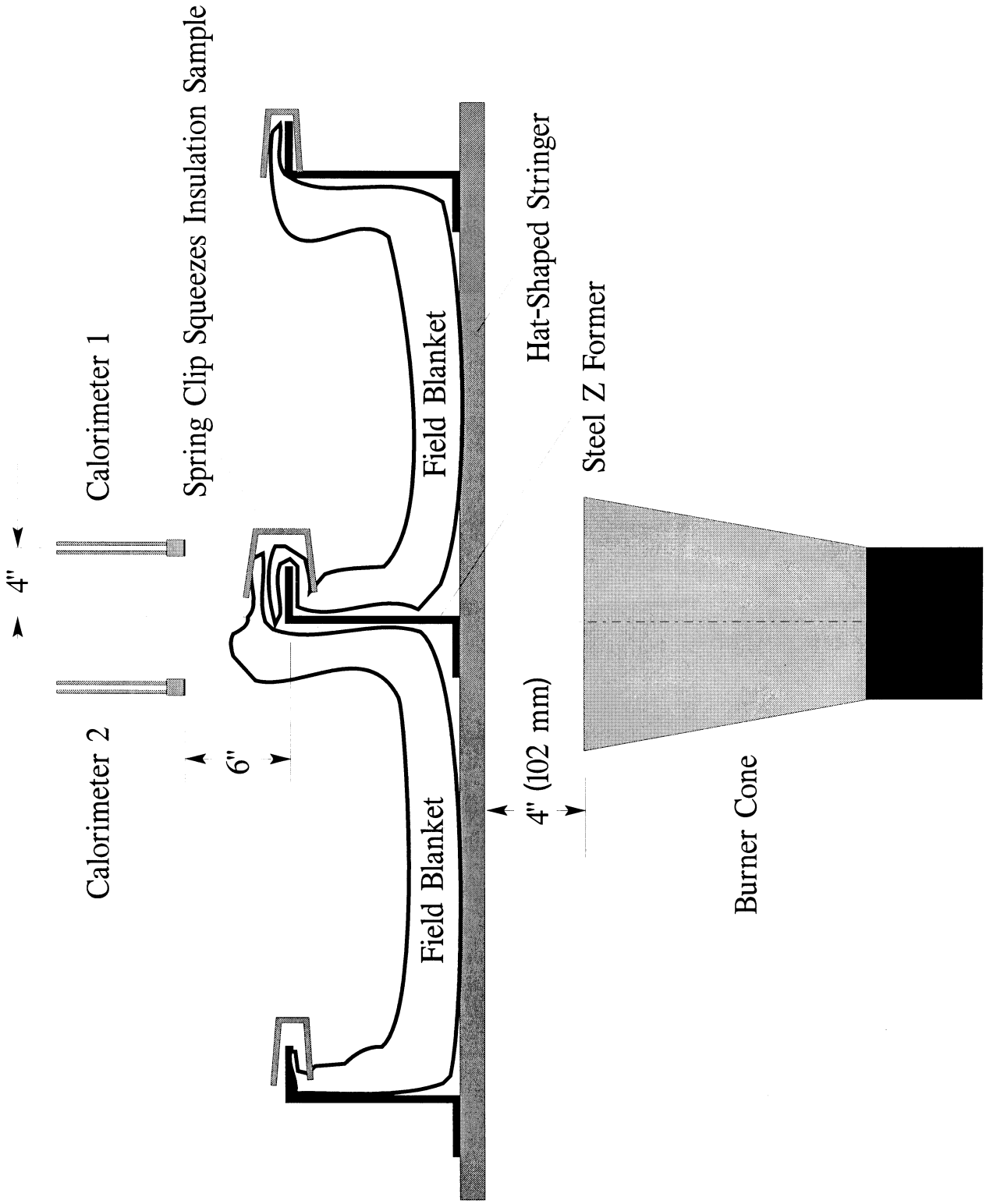

Figure 7 – Test Specimen Installation on Test Frame

(Note: For blanket materials that cannot be installed in accordance with figure 7 above, the blankets must be installed in a manner approved by the FAA.)

(v) *Conditioning.* Condition the specimens at 70° ±5°F (21° ±2°C) and 55% ±10% relative humidity for a minimum of 24 hours prior to testing.

(d) *Preparation of apparatus.*

(1) Level and center the frame assembly to ensure alignment of the calorimeter and/or thermocouple rake with the burner cone.

(2) Turn on the ventilation hood for the test chamber. Do not turn on the burner blower. Measure the airflow of the test chamber using a vane anemometer or equivalent measuring device. The vertical air velocity just behind the top of the upper insulation blanket test specimen must be 100 ±50 ft/min (0.51 ±0.25 m/s). The horizontal air velocity at this point must be less than 50 ft/min (0.25 m/s).

(3) If a calibrated flow meter is not available, measure the fuel flow rate using a graduated cylinder of appropriate size. Turn on the burner motor/fuel pump, after insuring that the igniter system is turned off. Collect the fuel via a plastic or rubber tube into the graduated cylinder for a 2-minute period. Determine the flow rate in gallons per hour. The fuel flow rate must be 6.0 ±0.2 gallons per hour (0.378 ±0.0126 L/min).

(e) *Calibration.*

(1) Position the burner in front of the calorimeter so that it is centered and the vertical plane of the burner cone exit is 4 ±0.125 inches (102 ±3 mm) from the calorimeter face. Ensure that the horizontal centerline of the burner cone is offset 1 inch below the horizontal centerline of the calorimeter (figure 8). Without disturbing the calorimeter position, rotate the burner in front of the thermocouple rake, such that the middle thermocouple (number 4 of 7) is centered on the burner cone.

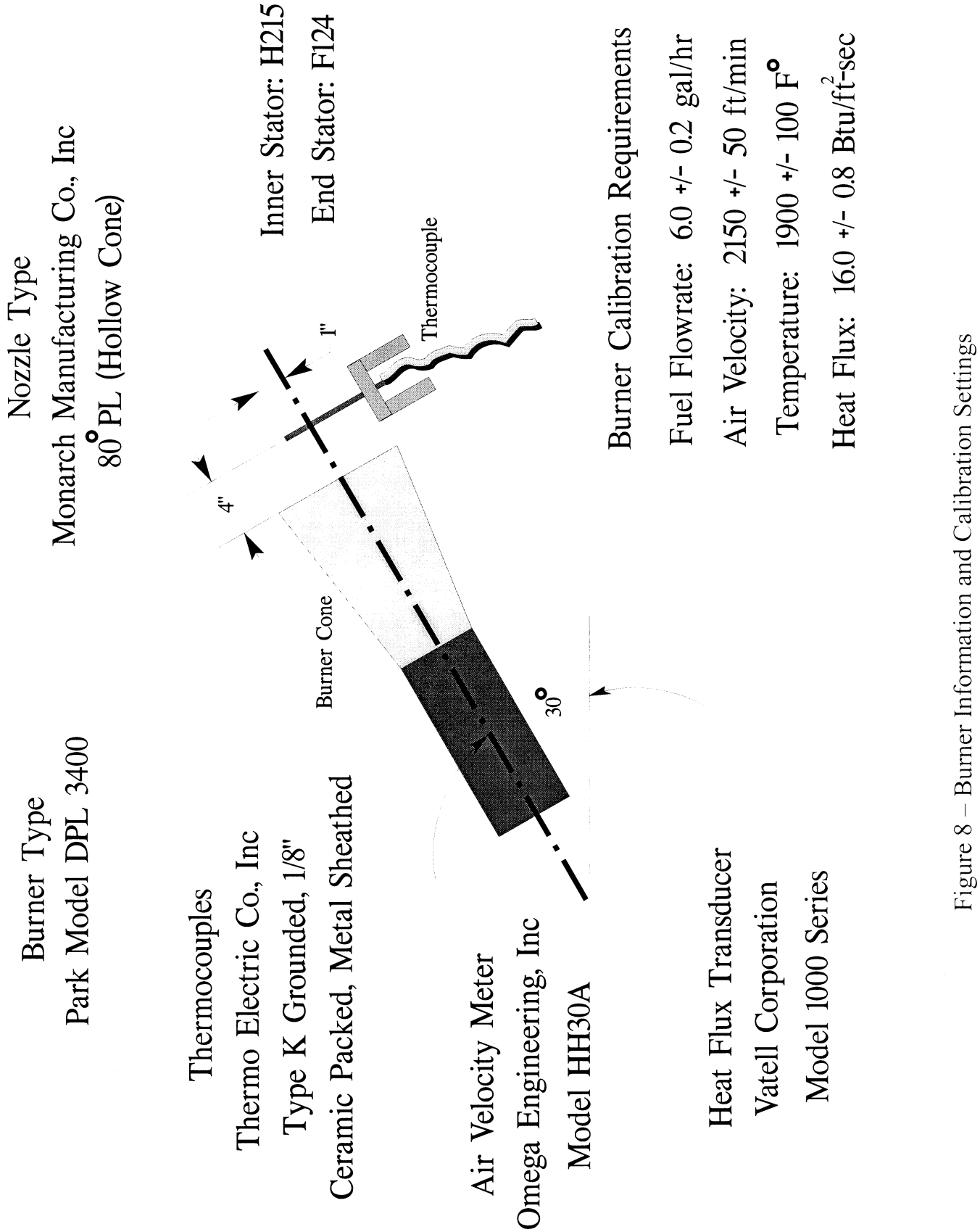

Figure 8 – Burner Information and Calibration Settings

Ensure that the horizontal centerline of the burner cone is also offset 1 inch below the horizontal centerline of the thermocouple tips. Re-check measurements by rotating the burner to each position to ensure proper alignment between the cone and the calorimeter and thermocouple rake. (Note: The test burner mounting system must incorporate ''detents'' that ensure proper centering of the burner cone with respect to both the calorimeter and the thermocouple rakes, so that rapid positioning of the burner can be achieved during the calibration procedure.)

(2) Position the air velocity meter in the adapter or airbox, making certain that no gaps exist where air could leak around the air velocity measuring device. Turn on the blower/motor while ensuring that the fuel solenoid and igniters are off. Adjust the air intake velocity to a level of 2150 ft/min, (10.92 m/s) then turn off the blower/motor. (Note: The Omega HH30 air velocity meter measures 2.625 inches in diameter. To calculate the intake airflow, multiply the cross-sectional area (0.03758 ft^2) by the air velocity (2150 ft/min) to obtain 80.80 ft^3/min. An air velocity meter other than the HH30 unit can be used, provided the calculated airflow of 80.80 ft^3/min (2.29 m^3/min) is equivalent.)

(3) Rotate the burner from the test position to the warm-up position. Prior to lighting the burner, ensure that the calorimeter face is clean of soot deposits, and there is water running through the calorimeter. Examine and clean the burner cone of any evidence of buildup of products of combustion, soot, *etc.* Soot buildup inside the burner cone may affect the flame characteristics and cause calibration difficulties. Since the burner cone may distort with time, dimensions should be checked periodically.

(4) While the burner is still rotated to the warm-up position, turn on the blower/motor, igniters and fuel flow, and light the burner. Allow it to warm up for a period of 2 minutes. Move the burner into the calibration position and allow 1 minute for calorimeter stabilization, then record the heat flux once every second for a period of 30 seconds. Turn off burner, rotate out of position, and allow to cool. Calculate the average heat flux over this 30-second duration. The average heat flux should be 16.0 ±0.8 Btu/ft^2 sec (18.2 ±0.9 W/cm^2).

(5) Position the burner in front of the thermocouple rake. After checking for proper alignment, rotate the burner to the warm-up position, turn on the blower/motor, igniters and fuel flow, and light the burner. Allow it to warm up for a period of 2 minutes. Move the burner into the calibration position and allow 1 minute for thermocouple stabilization, then record the temperature of each of the 7 thermocouples once every second for a period of 30 seconds. Turn off burner, rotate out of position, and allow to cool. Calculate the average temperature of each thermocouple over this 30-second period and record. The average temperature of each of the 7 thermocouples should be 1900°F ± 100°F (1038 ± 56°C).

(6) If either the heat flux or the temperatures are not within the specified range, adjust the burner intake air velocity and repeat the procedures of paragraphs (4) and (5) above to obtain the proper values. Ensure that the inlet air velocity is within the range of 2150 ft/min ±50 ft/min (10.92 ±0.25 m/s).

(7) Calibrate prior to each test until consistency has been demonstrated. After consistency has been confirmed, several tests may be conducted with calibration conducted before and after a series of tests.

(f) *Test procedure.*

(1) Secure the two insulation blanket test specimens to the test frame. The insulation blankets should be attached to the test rig center vertical former using four spring clamps positioned as shown in figure 7 (according to the criteria of paragraph (c)(4) or (c)(4)(i) of this part of this appendix).

(2) Ensure that the vertical plane of the burner cone is at a distance of 4 ±0.125 inch (102 ±3 mm) from the outer surface of the horizontal stringers of the test specimen frame, and that the burner and test frame are both situated at a 30° angle with respect to vertical.

(3) When ready to begin the test, direct the burner away from the test position to the warm-up position so that the flame will not impinge on the specimens prematurely. Turn on and light the burner and allow it to stabilize for 2 minutes.

(4) To begin the test, rotate the burner into the test position and simultaneously start the timing device.

(5) Expose the test specimens to the burner flame for 4 minutes and then turn off the burner. Immediately rotate the burner out of the test position.

(6) Determine (where applicable) the burnthrough time, or the point at which the heat flux exceeds 2.0 Btu/ft^2-sec (2.27 W/cm^2).

(g) *Report.*

(1) Identify and describe the specimen being tested.

(2) Report the number of insulation blanket specimens tested.

(3) Report the burnthrough time (if any), and the maximum heat flux on the back face of the insulation blanket test specimen, and the time at which the maximum occurred.

(h) *Requirements.*

(1) Each of the two insulation blanket test specimens must not allow fire or flame penetration in less than 4 minutes.

(2) Each of the two insulation blanket test specimens must not allow more than 2.0 Btu/ft^2-sec (2.27 W/cm^2) on the cold side of the insulation specimens at a point 12 inches (30.5 cm) from the face of the test rig.

PART 91—GENERAL OPERATING AND FLIGHT RULES

■ 4. The authority citation for part 91 continues to read as follows:

Authority: 49 U.S.C. 106(g), 40103, 40113, 40120, 44101, 44111, 44701, 44709, 44711, 44712, 44715, 44716, 44717, 44722, 46306, 46315, 46316, 46502, 46504, 46506–46507, 47122, 47508, 47528–47531.

■ 5. Amend § 91.613 by redesignating the existing text as paragraph (a), and adding paragraph (b) to read as follows:

§ 91.613 Materials for compartment interiors.

* * * * *

(b) Thermal/acoustic insulation materials. For transport category airplanes type certificated after January 1, 1958:

(1) For airplanes manufactured before September 2, 2005, when thermal/acoustic insulation materials are installed in the fuselage as replacements after September 2, 2005, those materials must meet the flame propagation requirements of § 25.856 of this chapter, effective September 2, 2003.

(2) For airplanes manufactured after September 2, 2005, thermal/acoustic insulation materials installed in the fuselage must meet the flame propagation requirements of § 25.856 of this chapter, effective September 2, 2003.

PART 121—OPERATING REQUIREMENTS: DOMESTIC, FLAG, AND SUPPLEMENTAL OPERATIONS

■ 6. The authority citation for part 121 continues to read as follows:

Authority: 49 U.S.C. 106(g), 40113, 40119, 44101, 44701–44702, 44705, 44709–44711, 44713, 44716–44717, 44722, 44901, 44903–44904, 44912, 46105.

■ 7. Amend § 121.312 by adding paragraph (e) to read as follows:

§ 121.312 Materials for compartment interiors.

* * * * *

(e) Thermal/acoustic insulation materials. For transport category airplanes type certificated after January 1, 1958:

(1) For airplanes manufactured before September 2, 2005, when thermal/acoustic insulation materials are installed in the fuselage as replacements after September 2, 2005, those materials must meet the flame propagation requirements of § 25.856 of this chapter, effective September 2, 2003.

(2) For airplanes manufactured after September 2, 2005, thermal/acoustic insulation materials installed in the fuselage must meet the flame propagation requirements of § 25.856 of this chapter, effective September 2, 2003.

(3) For airplanes with a passenger capacity of 20 or greater, manufactured after September 3, 2007, thermal/acoustic insulation materials installed in the lower half of the fuselage must meet the flame penetration resistance requirements of § 25.856 of this chapter, effective September 2, 2003.

PART 125—CERTIFICATION AND OPERATIONS: AIRPLANES HAVING A SEATING CAPACITY OF 20 OR MORE PASSENGERS OR A MAXIMUM PAYLOAD CAPACITY OF 6,000 POUNDS OR MORE

■ 8. The authority citation for part 125 continues to read as follows:

Authority: 49 U.S.C. 106(g), 40113, 44701–44702, 44705, 44710–44711, 44713, 44716–44717, 44722.

■ 9. Amend § 125.113 by adding paragraph (c) to read as follows:

§ 125.113 Cabin interiors.

* * * * *

(c) Thermal/acoustic insulation materials. For transport category airplanes type certificated after January 1, 1958:

(1) For airplanes manufactured before September 2, 2005, when thermal/acoustic insulation materials are installed in the fuselage as replacements after September 2, 2005, those materials must meet the flame propagation requirements of § 25.856 of this chapter, effective September 2, 2003.

(2) For airplanes manufactured after September 2, 2005, thermal/acoustic insulation materials installed in the fuselage must meet the flame propagation requirements of § 25.856 of this chapter, effective September 2, 2003.

PART 135—OPERATING REQUIREMENTS: COMMUTER AND ON-DEMAND OPERATIONS AND RULES GOVERNING PERSONS ON BOARD SUCH AIRCRAFT

■ 10. The authority citation for part 135 continues to read as follows:

Authority: 49 U.S.C. 106(g), 40113, 44701–44702, 44705, 44709, 44711–44713, 44715–44717, 44722.

■ 11. Amend § 135.170 by adding paragraph (c) to read as follows:

§ 135.170 Materials for compartment interiors.

* * * * *

(c) Thermal/acoustic insulation materials. For transport category airplanes type certificated after January 1, 1958:

(1) For airplanes manufactured before September 2, 2005, when thermal/acoustic insulation materials are installed in the fuselage as replacements after September 2, 2005, those materials must meet the flame propagation requirements of § 25.856 of this chapter, effective September 2, 2003.

(2) For airplanes manufactured after September 2, 2005, thermal/acoustic insulation materials installed in the fuselage must meet the flame propagation requirements of § 25.856 of this chapter, effective September 2, 2003.

Issued in Washington, DC on July 14, 2003.

Marion Blakey,

Administrator.

[FR Doc. 03–18612 Filed 7–30–03; 8:45 am]

BILLING CODE 4910–13–P

Federal Register

Thursday,
July 31, 2003

Part IV

Nuclear Regulatory Commission

Yucca Mountain Review Plan, NUREG–1804, Revision 2, Final Report; Notice

NUCLEAR REGULATORY COMMISSION

Yucca Mountain Review Plan, NUREG–1804, Revision 2, Final Report

AGENCY: Nuclear Regulatory Commission.

ACTION: Notice of availability and public comments and responses.

SUMMARY: The U.S. Nuclear Regulatory Commission (NRC) is announcing the availability of ''Yucca Mountain Review Plan, NUREG–1804, Revision 2, Final Report,'' public comments on that document and NRC response to comments. The ''Yucca Mountain Review Plan'' provides guidance to NRC staff for evaluating a potential license application to receive and possess high-level radioactive waste at a geologic repository constructed or operated at Yucca Mountain, Nevada.

ADDRESSES: Copies of any documents related to this action may be examined at the NRC Public Document Room, One White Flint North, Public File Area O1–F21, 11555 Rockville Pike, Rockville, Maryland. Documents are also available electronically at NRC's Public Electronic Reading Room on the Internet at *http://www.nrc.gov/reading-rm.html*. From this site, the public can gain entry into NRC's Agencywide Documents Access and Management System, which provides text and image files of NRC's public documents. For more information, contact NRC's Public Document Room Reference staff by telephone at (800) 397–4209: (301) 415–4737: or e-mail: *pdr@nrc.gov*.

The document is also available at NRC's Web site at: *http://www.nrc.gov/reading-rm/doc-collections/nuregs/staff/sr1804/*. A hard copy may also be purchased from one of these two sources: (1) The Superintendent of Documents, U.S. Government Printing Office, P.O. Box 37082, Washington, DC 20402–9328, Internet: *http://bookstore.gpo.gov*. Telephone: 202–512–1800, Fax: 202–512–2250; or (2) The National Technical Information Service, Springfield, VA 22161–0002, Internet: *http://www.ntis.gov*. Telephone: 1–800–553–6847 or 703–605–6000. A copy of the ''Yucca Mountain Review Plan, NUREG–1804, Revision 2, Final Report'' is also available for inspection, and copying for a fee, in NRC's Public Document Room, One White Flint North, Public File Area O1–F21, 11555 Rockville Pike, Rockville, Maryland.

FOR FURTHER INFORMATION CONTACT: Jeffrey A. Ciocco, Office of Nuclear Material Safety and Safeguards, U.S. Nuclear Regulatory Commission, Mail Stop T–7F3, Washington, DC 20555–0001, telephone (301) 415–6391, e-mail: *jac3@nrc.gov*.

SUPPLEMENTARY INFORMATION: In preparing ''Yucca Mountain Review Plan, NUREG–1804, Revision 2, Final Report,'' the U.S. Nuclear Regulatory Commission (NRC) staff carefully reviewed and considered more than 900 discrete comments received during the public comment period in about 35 individual letters and extracted from the transcripts of three public meetings. To facilitate the analysis, NRC staff grouped all written and oral comments on the Yucca Mountain Review Plan into the following 11 major topic areas:

(1) Introduction;
(2) Acceptance Review;
(3) General Information;
(4) Preclosure Period;
(5) Postclosure Period;
(6) Research and Development Program to Resolve Safety Issues;
(7) Performance Confirmation;
(8) Administrative and Programmatic Areas;
(9) Structure of the Yucca Mountain Review Plan;
(10) Selected Topics; and
(11) Other Comments.

Throughout this response to public comments, references to Yucca Mountain Review Plan sections use the section numbering that was in Revision 2, ''Draft Report for Comment,'' published in March 2002. As a result of changes to address public comments, Chapter 1 of the draft Yucca Mountain Review Plan is now Appendix A in Revision 2, ''Final Report,'' and Chapter 2 is now Appendix B. Consequently, Chapter 1 is the ''Review Plan for General Information,'' and the ''Review Plan for Safety Analysis Report'' is now Chapter 2. The numbering of sections throughout the plan has been modified accordingly. For example, Section 3.2.1 in the ''Draft Report for Comment'' is now Section 1.2.1 in the ''Final Report,'' and Section 4.2.1.3.7 in the ''Draft Report for Comment'' is Section 2.2.1.3.7 in the ''Final Report.''

1 Introduction

1.1 The U.S. Nuclear Regulatory Commission Staff Licensing Review

Issue 1: Will NRC staff conduct a thorough licensing review?

Comment. A number of commenters expressed concern about the statement in the Yucca Mountain Review Plan ''Introduction'' that NRC staff would conduct limited in-depth, detailed analyses and would not seek scientific precision. Commenters disagreed with the statement, in the Yucca Mountain Review Plan ''Introduction,'' that a licensing review is not intended to be a detailed evaluation of all aspects of facility operations.

Another commenter stated the Yucca Mountain Review Plan appeared to be a menu of options rather than a plan for a thorough regulatory review using a risk-informed, performance-based decision process to review the Yucca Mountain license application.

Commenters stated that the Yucca Mountain Review Plan is subjective in nature and appears to be the same, or more lenient than, the process used for power reactors. Other commenters noted the lack of a performance history to support establishing defense-in-depth measures and safety margins, and suggested that any assumptions must be adequately supported and justified.

A commenter stated the risk-informed basis of the review plan and the lack of definitive criteria allows the U.S. Department of Energy (DOE) to determine the level of importance of almost all aspects of the repository program and allows DOE to determine the level of NRC review effort. A commenter also stated that the licensing review process must not only identify discrepancies but must also document them.

Response. NRC implements a licensing process in which a license applicant has the responsibility to demonstrate that nuclear material can be safely received and possessed, and a nuclear facility can be safely operated, in accordance with regulations. NRC staff licensing review determines whether this demonstration of compliance with regulations is adequate. The regulatory standard for a high-level waste repository at Yucca Mountain is ''reasonable assurance'' for preclosure matters, and ''reasonable expectation'' for postclosure matters. NRC regulations require a license applicant to provide information that is supported by a sound scientific and technical basis.

While NRC staff reviews the entire license application, the amount of information required to demonstrate that regulatory requirements are met may vary depending on the importance of the information. Specifically, for a risk-informed, performance-based regulatory program, NRC staff focuses on those areas that have been shown to have the greatest importance to public health and safety. Areas requiring detailed, NRC staff independent analyses are determined by NRC staff and reviewed to the level necessary to confirm analyses in order to make a reasonable assurance or reasonable expectation determination.

The Yucca Mountain Review Plan facilitates a risk-informed, performance-based review and allows for flexibility in the level of detail required for this review. The Commission addressed the use of a risk-informed, performance-based review for a potential Yucca Mountain repository licensing proceeding in its ''Statement of Considerations'' for 10 CFR part 63 (66 FR 55732, 55736–55737, November 2, 2001) as follows.

In developing these criteria, the Commission sought to establish a coherent body of risk-informed, performance-based criteria for Yucca Mountain that is compatible with the Commission's overall philosophy of risk-informed, performance-based regulation [''Use of Probabilistic Risk Assessment Methods in Nuclear Regulatory Activities—Final Policy Statement'' (60 FR 42622; August 16, 1995)]. Stated succinctly, risk-informed, performance-based regulation is an approach in which risk insights, engineering analysis and judgment (*e.g.*, defense in depth), and performance history are used to: (1) Focus attention on the most important activities, (2) establish objective criteria for evaluating performance, (3) develop measurable or calculable parameters for monitoring system and licensee performance, (4) provide flexibility to determine how to meet the established performance criteria in a way that will encourage and reward improved outcomes, and (5) focus on the results as the primary basis for regulatory decision-making.

Relevant defense-in-depth, safety margin, and performance history information from other facilities can be applied to a high-level waste repository. Many aspects of design and performance for nuclear facilities are analogous to those that would be used for a high-level waste repository. For example, there is extensive regulatory guidance on design and implementation of radiation health physics programs at nuclear facilities. Because this information would be used in review of a license application for a proposed repository at Yucca Mountain, the Yucca Mountain Review Plan references such regulatory guidance.

To clarify the risk-informed, performance-based review, the ''Introduction'' section of the draft Yucca Mountain Review Plan (now Appendix A) and the ''Acceptance Review'' section (now Appendix B) have been modified, as appropriate, to clarify the scope of NRC staff's licensing review.

Issue 2: Does the Yucca Mountain Review Plan assume that all licensing issues will be resolved and a license for a high-level waste repository at Yucca Mountain will be approved?

Comment. A commenter was concerned that the statement in the draft Yucca Mountain Review Plan ''Introduction'' that NRC staff will resolve issues using its technical understanding implied that all issues will be resolved in favor of licensing.

Response. The language in the draft Yucca Mountain Review Plan ''Introduction'' was not intended to suggest that NRC staff had prejudged the acceptability of a license application for Yucca Mountain. A conclusion as to whether all licensing issues are resolved is premature. NRC staff must first conduct a detailed technical review of the license application and consider whether information in DOE's application satisfies regulatory requirements and demonstrates that public health and safety, and environment can be protected.

NRC staff revised the language in the Yucca Mountain Review Plan to clarify this point.

Issue 3: Does NRC have adequate authority to impose license conditions?

Comment. Two commenters expressed concern that NRC lacked authority to impose and enforce license conditions because the ''Introduction'' of the draft Yucca Mountain Review Plan states that an applicant must agree to any license conditions. The commenters are concerned that applicants can reject or negotiate license conditions with the party having the greater political power having the advantage. The commenters also expressed concern with the statement in the Yucca Mountain Review Plan ''Introduction'' that the Commission has no authority to compel an applicant to come forward with or prepare a different proposal.

Response. The language in the ''Introduction'' was intended to state that license conditions should be discussed with the licensee and imposed only as necessary to meet the reasonable assurance or reasonable expectation standard. It was not intended to suggest that the Commission lacks the authority to impose license conditions. In fact, 10 CFR 63.42 provides that the ''Commission shall include any license conditions, including license specifications, it considers necessary to protect the health and safety of the public, the common defense and security, and environmental values'' in any license issued under 10 CFR part 63.

The Commission has authority to require regulatory compliance and protection of public health and safety and the environment. The Commission, however, cannot mandate that an applicant submit an application or adopt a specific design or analysis. The Commission has the authority to deny an application, grant an application, or grant an application with conditions. Unless the Commission concludes that regulations will be complied with and a facility will be safely operated and material safely received and possessed, a license will not be granted.

The ''Introduction'' section of the Yucca Mountain Review Plan has been modified to clarify NRC's authority.

Issue 4: When will the Yucca Mountain Review Plan be finalized?

Comment. One commenter stated that NRC should consider and incorporate the comments received as soon as practicable after the close of the comment period on the Yucca Mountain Review Plan.

Response. Consistent with the comment and NRC's responsibility to provide guidance on a timely basis, this **Federal Register** notice indicates the availability of the Yucca Mountain Review Plan, NUREG–1804, Revision 2, Final Report, well in advance of the projected December 2004 DOE license application.

2 Acceptance Review

2.1 Acceptance Review Process

Issue 1: Will an acceptance review of a license application for a high-level waste repository at Yucca Mountain be adequate?

Comment. Commenters expressed concern about the statement in the ''Acceptance Review'' section of the draft Yucca Mountain Review Plan that NRC staff does not determine the technical adequacy of information during the acceptance review and the potential for NRC staff to accept biased and erroneous information and the need for NRC to determine the accuracy and adequacy of information.

Response. The purpose of the acceptance review is to determine whether the application can be docketed, that is, whether the application is complete and contains sufficient information to enable NRC staff to conduct its detailed licensing review. The acceptance review does not presuppose what that licensing decision will be and, therefore, does not evaluate the technical adequacy of the information. If the license application passes the acceptance review, the application would be docketed, and the detailed technical review would begin. During the detailed technical review, NRC staff would determine whether the submitted information is accurate and demonstrates that regulatory requirements are met. If the license application fails the acceptance review (for example, it is incomplete and lacks sufficient information to support the

detailed licensing review), the license application would be rejected and returned to DOE, or NRC would identify the deficiencies and request additional information from DOE.

To allow NRC staff sufficient time to conduct a thorough acceptance review, NRC anticipates that the review can reasonably be completed within 90 days after the submission of the license application. During that time, the NRC staff will determine whether the application is complete and contains sufficient information for the NRC staff to conduct a detailed technical review. If the application is found acceptable for docketing, a notice would published in the **Federal Register** offering an opportunity for a formal adjudicatory hearing and public participation in the licensing process.

The ''Acceptance Review'' section of the Yucca Mountain Review Plan has been modified to clarify the purpose of the acceptance review.

Issue 2: What does completeness of information mean with respect to the acceptance review?

Comment. One commenter questioned the validity of the option ''Accept, request additional information'' that is contained within the checklist in the draft Yucca Mountain Review Plan section on Acceptance Review. The commenter expressed concerned that this option could lead to the incorrect impression that specific issues had been resolved, when in fact, more information is required for the detailed technical review.

Another commenter stated that use of the term ''complete,'' in the Acceptance Review section of the draft Yucca Mountain Review Plan is confusing and recommended that this section be clarified to state that the degree of information available and appropriate for specific subject areas in the review plan may vary with the stage of repository development.

Response. The use of the option ''accept, request additional information'' is consistent with other NRC regulatory programs and the purpose of an acceptance review.

An acceptance review is conducted to determine whether the application is acceptable for docketing, that is, whether the application is complete and contains sufficient information to support a detailed licensing review. An application could be found deficient in an acceptance review due to the failure to submit required documents, or because there are omitted sections, illegible figures, or missing analyses.

If deficiencies are limited, NRC staff can proceed with a detailed licensing review while awaiting additional specific information from the applicant, provided the applicant provides omitted information in a timely manner.

The NRC staff decision, at the acceptance review stage, to accept or reject an application would be based on consideration of the submitted information and the importance of the missing information for beginning the detailed technical review.

The ''Acceptance Review'' section of the Yucca Mountain Review Plan has been modified to clarify the purpose of the acceptance review.

3 General Information

3.1 Content of the General Information Section of the Yucca Mountain Review Plan

Issue: What is the nature of the inspection and testing, of waste forms and waste packages listed in the ''General Information'' section of the draft Yucca Mountain Review Plan?

Comment. One commenter asked the purpose of the inspection and testing of waste forms and waste packages included in the ''General Information'' section of the Yucca Mountain Review Plan. Another commenter asked whether Naval reactor fuel would be inspected.

Response. Section 3.1, ''General Information,'' of the draft Yucca Mountain Review Plan provides procedures and acceptance criteria for review of general information that is required to be in a license application for a high-level waste repository at Yucca Mountain in accordance with 10 CFR 63.21(b)(1). Review Method 2, ''General Nature of the Geologic Repository Operations Area Activities,'' of this section provides guidance to NRC staff to confirm that DOE has provided a summary description of the proposed geologic repository operations area operations, including information on plans for the inspection and testing of waste forms and waste packages as they are received. The associated Acceptance Criterion 2 specifies that these plans should have been provided. The ''Review Method'' indicates that a detailed technical review of this information would be conducted using Section 4.5.6, ''Plans for Conduct of Normal Activities, Including Maintenance, Surveillance, and Periodic Testing,'' of the draft Yucca Mountain Review Plan.

The purpose of the inspection and testing plans is to ensure that waste forms and waste packages arriving at a repository are intact and are functioning properly. Should waste forms or waste packages not be intact or not functioning properly, DOE would be required to take actions to place them in a safe condition.

DOE has the authority and the responsibility to characterize, inspect, and monitor Naval reactor fuel. Additionally, the characteristics of Naval fuel and its associated materials and compounds must be considered in DOE's demonstration of compliance with preclosure and postclosure performance objectives.

No changes to the Yucca Mountain Review Plan were made as a result of this comment.

3.2 Adequacy of Site Characterization

Issue 1: Would there be a need for additional site characterization work once a license application for a potential high-level waste repository at Yucca Mountain is submitted?

Comment. Commenters expressed concern about Acceptance Criterion 3 in Section 3.5, ''Description of Site Characterization Work,'' of the draft Yucca Mountain Review Plan. This acceptance criterion addresses limitations that would qualify the descriptions of site characterization work and notes that the license application would have to identify any ''additional site characterization work necessary to increase basic scientific understanding of any significant feature, event, and process.'' The commenters asked why a license application would be accepted if the applicant had not finished site characterization work or did not have a scientific understanding of any feature, event, or process. Other commenters noted that other licenses issued for shorter period are not granted until the applicants have completed their evaluations and that incomplete site characterization should not be relegated to the ''Performance Confirmation Program'' or to the ''Research and Development Program to Resolve Safety Questions.''

Response. A license for a potential high-level waste repository at Yucca Mountain can not be granted unless the applicant has demonstrated, and NRC has determined, regulatory requirements are met. Under 10 CFR 63.15, DOE is required to conduct a program of site characterization, with respect to the Yucca Mountain site, before DOE submits a license application. The statement in the review plan acknowledges that knowledge about the site and repository will evolve over the life-cycle of a repository as the required performance confirmation program continues in accordance with 10 CFR 63, subpart F. The objectives of the performance confirmation program is to confirm the assumptions, data and analyses that led to the findings that

permitted construction of the repository and subsequent emplacement of waste. Per the requirements of 10 CFR 63.131, the program must provide data that indicate, where practicable, whether ''[a]ctual subsurface conditions encountered and changes to those conditions during construction and waste emplacement operations are within the limits assumed in the licensing review.'' Also, the performance confirmation program must be started during site characterization and continue until permanent closure.

This section of the Yucca Mountain Review Plan has been modified to clarify the site characterization description.

Issue 2: Should the definition of the location and characteristics of the reasonably maximally exposed individual be clarified?

Comment. One commenter stated that Review Method 2 of draft Yucca Mountain Review Plan, Section 3.5, ''Description of Site Characterization Work,'' incorrectly stated that the location and characteristics of the reasonably maximally exposed individual had already been specified by regulation. The commenter argued that it is the responsibility of DOE to propose these details in its license application.

Response. The Yucca Mountain Review Plan text has been revised consistent with 10 CFR 63.312 to reflect the required location and characteristics of the reasonably maximally exposed individual.

3.3 Material Control and Accounting Program

Issue 1: What level of detail is appropriate for the material control and accounting program for a construction authorization?

Comment. One commenter noted that the information on material control and accounting activities may be in rudimentary form and not as detailed as other areas at the construction authorization stage. Commenters concluded that the related information would not need to be complete at the time of construction authorization application. Commenters further suggested that the license application should describe the material control and accounting program and contain a commitment to meet the requirements at 10 CFR 63.78.

Response. Pursuant to 10 CFR part 63, there are specific requirements for the material control and accounting program that go beyond a simple commitment at the time of application for a construction authorization. Pursuant to 10 CFR 63.21(b), a license application must contain a description of the material control and accounting program to meet the requirements of 10 CFR 63.78, including design basis information, an assessment of potential impact of the material control and accounting program on design features, and a description of physical aspects of the material control and accounting program.

The introductory paragraph to Section 3.4, ''Material Control and Accounting Program,'' of the draft Yucca Mountain Review Plan has been modified to clarify these requirements.

Issue 2: How will spent nuclear fuel and high-level radioactive waste in storage be inventoried?

Comment. One commenter noted that there are no specific guidelines in the Yucca Mountain Review Plan for a detailed inventory process of spent nuclear fuel and high-level radioactive waste after the waste is placed within sealed disposal canisters. Another commenter stated that inventory of emplaced waste would be ensured by controlling access to the subsurface.

Response. The Yucca Mountain Review Plan states, in accordance with 10 CFR 63.21, that the applicant must provide a description of how physical inventories of the repository will be planned, conducted, assessed, and reported. Consistent with the performance-based regulations in 10 CFR part 63, the Yucca Mountain Review Plan does not prescribe the methods for a demonstration of compliance. Accordingly, the applicant has the flexibility to design and implement a material control and accounting program that meets regulatory requirements.

No changes have been made to the Yucca Mountain Review Plan in response to this comment.

Issue 3: Under what conditions would spent nuclear fuel or high-level waste be transferred out of the geologic repository operations area?

Comment. One commenter asked for a definition of conditions that would require movement of waste from a repository.

Response. The geologic repository operations area is defined by 10 CFR part 63 as a high-level radioactive waste facility that is part of a geologic repository, including both surface and subsurface areas, where waste handling activities are conducted. As the Commission has previously indicated (66 FR 55732, 55743, November 2, 2001) ''[w]aste retrieval is intended to be an unusual event only to be undertaken to protect public health and safety.''

No changes were made to the Yucca Mountain Review Plan as a result of this comment.

Issue 4: Should the Yucca Mountain Review Plan define the quantity of material that would initiate reporting the loss of nuclear materials?

Comment. One commenter suggested that the review methods and acceptance criteria of draft Yucca Mountain Review Plan Section 3.4, ''Material Control and Accounting Program,'' that address reporting requirements for lost nuclear material should apply not only to a significant quantity, but to any quantity of material that may be missing. Another commenter asked who would be responsible for preventing theft of special nuclear material.

Response. NRC must be notified of any loss of special nuclear material.

As is the case for other NRC-licensed facilities, the licensee, in this case DOE, is responsible for the safe and secure operation of the facility and for safe receipt and possession, including prevention of theft of nuclear material. NRC staff will review the license application to determine whether DOE has adequate physical protection and material control and accountability programs. Additionally, if a license is issued, NRC staff would conduct inspections to verify whether physical protection, and material control and accountability programs, are being properly implemented.

The term ''significant quantity'' was deleted from this section of the Yucca Mountain Review Plan.

Issue 5: Should the Yucca Mountain Review Plan address storage of emplaced waste?

Comment. One commenter expressed concern that the statement ''the reviewer should consider that emplaced waste is stored until the repository is closed'' in the Yucca Mountain Review Plan implies (because of requirements in 10 CFR 72.72) that physical inventory would be required at least yearly for waste packages in the subsurface. The commenter suggested deleting this statement, arguing that 10 CFR 63.2 defines disposal as ''the emplacement of radioactive waste in a geologic repository with the intent of leaving it there permanently,'' which distinguishes disposal from storage operations. The commenter believes that the inventory aspect of the material control and accounting program could be met by controlling access to the subsurface, in conjunction with the use of Material Status Reports and the requirements in 10 CFR 63.71(b) for a record of movement of wastes within the geologic repository operations area.

Response. DOE has the flexibility to demonstrate appropriate techniques for meeting material control and accounting requirements. The statement addressing storage of emplaced waste has been removed.

3.4 Physical Protection

Issue 1: How would sensitive physical security plan information be protected?

Comment. Numerous commenters expressed concern about the level of protection from public access that would be provided for Yucca Mountain physical protection plans, programs, and procedures.

Response. Yucca Mountain physical protection plan information submitted to NRC staff for review and approval would be handled as Safeguards Information. Safeguards Information is protected from unauthorized disclosure in accordance with NRC regulations at 10 CFR 73.21. Access would be limited to those persons with an established ''need to know.''

No changes were made to the Yucca Mountain Review Plan in response to this comment.

Issue 2: Will NRC staff require a physical protection plan to be submitted with the license application?

Comment. Numerous comments were received regarding whether a physical protection plan must be submitted with a license application. The commenters were concerned that there would not be adequate information in the plan and that the plan should be a complete and comprehensive document at the time of application submission.

Response. Pursuant to 10 CFR 63.21(b)(3), DOE must submit ''A description of the detailed security measures for physical protection of high-level radioactive waste in accordance with section 73.51 of this chapter. This plan must include the design for physical protection, the licensee's safeguards contingency plan, and security organization personnel training and qualification plan. The plan must list tests, inspections, audits, and other means to be used to demonstrate compliance with such requirements.'' The applicant must be knowledgeable as to the requirements in 10 CFR 73.51 and must design the requirements into the facility during the engineering and design phase of the project. After the issuance of a construction authorization, the applicant would submit a baseline physical protection plan for technical review to enable the NRC staff to determine whether the requirements of 10 CFR 73.51 are met. Revisions to the physical protection plan will be submitted for technical review as needed should requirements or design specifications warrant a change in security methods and procedures.

Modifications were made to the Yucca Mountain Review Plan to clarify the requirements for physical protection information.

Issue 3: Are physical protection requirements appropriately reflected in the Yucca Mountain Review Plan?

Comment. One commenter stated that the draft Yucca Mountain Review Plan sets forth physical protection requirements beyond those required by regulations. For example, 10 CFR 73.51(d)(4) requires daily random patrols for the protected area, but the draft Yucca Mountain Review Plan adds that a minimum of two patrols per security duty work shift should be conducted, unless the facility is in a remote area where more patrols may be necessary. Also, 10 CFR 73.51(d)(8) requires redundant communications capability, but the draft Yucca Mountain Review Plan adds a requirement that diverse systems should be used to ensure communications. In addition, the commenter recommends that the Yucca Mountain Review Plan simply state that DOE should commit to implementing the requirements of 10 CFR 73.51.

Response. The Yucca Mountain Review Plan is a guidance document and cannot impose regulatory requirements. The Yucca Mountain Review Plan has been revised consistent with the requirements in 10 CFR 73.51.

Issue 4: Should the Yucca Mountain Review Plan indicate that a designated response force could be used for security response?

Comment. One commenter suggested that for consistency with regulations, the Yucca Mountain Review Plan should indicate that DOE may use a designated response force rather than a local law enforcement authority in response to physical security threat.

Response. The Yucca Mountain Review Plan was modified to allow use of a designated response force, consistent with 10 CFR part 73.

Issue 5: Does the Yucca Mountain Review Plan include realistic measures for verifying the effectiveness of the physical protection system?

Comment. One commenter noted that the draft Yucca Mountain Review Plan statement in Section 3.5, ''Physical Protection Plan,'' that verification of the physical protection system should be conducted on-site by the reviewer before plan approval should be deleted. The commenter noted that on-site verifications cannot be performed at the construction authorization stage and that this statement was inconsistent with other Yucca Mountain Review Plan statements that address only how the system will be designed, tested, and maintained.

Response. The Yucca Mountain Review Plan was modified to remove the statement that on-site verification of the physical protection system was required before plan approval at the construction authorization stage.

4 Preclosure Period

4.1 Preclosure Operations

Issue 1: What procedures will be used to control processes and event sequences during the operational phase of a repository?

Comment. One commenter questioned control of processes and events that might occur during operations at a repository. The commenter asked for details of procedures that would be implemented in specific cases.

Response. As is the case for other facilities regulated by NRC, operations related to safety or waste isolation must be performed using formal procedures. These procedures must address routine operations as well as emergencies. At a high-level waste repository, the procedures would also reflect the results of the preclosure safety analysis, to the extent applicable, which includes hazards identification, consequence evaluation, and risk assessment.

Operating procedures would be evaluated before approval for receipt and possession of waste and would continue to be evaluated under the NRC inspection program that would be in place during the entire operational period of a repository.

No changes were made to the Yucca Mountain Review Plan as a result of this comment.

Issue 2: What are specific operating limits, parameters, or design criteria for the repository preclosure period?

Comment. Commenters asked questions relating to specific operating limits, parameters, or design criteria for the operating period of a repository. Commenters also asked how NRC could evaluate the adequacy of a preclosure safety analysis if the design contained in the license application was not final.

Response. Specific operating limits, parameters, and design criteria are not included in the Yucca Mountain Review Plan. DOE must define these parameters. The review methods and acceptance criteria in the Yucca Mountain Review Plan are flexible rather than prescriptive because the regulations at 10 CFR part 63 are risk-informed and performance-based.

Pursuant to 10 CFR 63.21, the application must be as complete as possible in the light of information that

is reasonably available at the time of docketing. The regulations also require that DOE update the application to permit a timely review before the issuance of a license. These requirements also apply to the repository design.

No changes were made to the Yucca Mountain Review Plan in response to this comment.

Issue 3: What is the meaning of the term ''operational period''?

Comment. One commenter asked for a definition of the term ''operational period'' as used in Section 4.1.1.1, ''Site Description as It Pertains to Preclosure Safety Analysis,'' of the draft Yucca Mountain Review Plan. The commenter asked whether the term includes emplacement only or also post-emplacement performance monitoring.

Response. A definition of the term ''operational period'' is found in 10 CFR 63.102(c), which states:

> * * * A period of operations follows the Commission's issuance of a license. The period of operations includes the time during which emplacement of waste occurs; any subsequent period before permanent closure during which the emplaced wastes are retrievable; and permanent closure, which includes sealing openings to the repository. Permanent closure represents the end of the performance confirmation program; final backfilling of the underground facility, if appropriate; and the sealing of shafts, ramps, and boreholes.

Since this definition is included in 10 CFR part 63, no changes were made to the Yucca Mountain Review Plan.

4.2 Waste Retrieval Operations

Issue 1: Does the Yucca Mountain Review Plan adequately address waste retrieval operations?

Comment. Commenters raised questions regarding waste retrieval. One commenter asked for: (i) Any assumptions associated with waste retrieval; (ii) the time frame after closure for retrieval; and (iii) the number of years after closure during which it would be possible to retrieve waste. The same commenter stated that once waste retrieval criteria are established, they must not be watered down. A commenter stated that a ''high-speed, fast and dirty'' retrieval procedure should be established to respond to sudden, catastrophic events. Other commenters stated that the Yucca Mountain Review Plan should require DOE to physically show it can remotely emplace and retrieve disposal canisters.

Response. The Commission has previously addressed issues related to retrievability of waste from a high-level waste repository at Yucca Mountain (66 FR 55743, November 2, 2001) and indicated that a physical demonstration of retrievability would not be necessary for a construction authorization.

> Some commenters were concerned that NRC's proposed regulations required DOE to submit plans for retrievability, but did not require an actual demonstration that the plans were feasible. Some commenters suggested that the NRC should require DOE to demonstrate the feasibility of its retrieval plans. * * * If necessary to protect public health and safety, waste package retrieval in a deep geologic repository would be a first-of-a-kind endeavor with unique engineering and geotechnical challenges. The Commission recognizes that the retrieval operation would be an unusual event, and may be an involved and expensive operation (U.S. Nuclear Regulatory Commission, ''Staff Analysis of Public Comments on Proposed Rule10 CFR part 60, 'Disposal of High-Level Radioactive Wastes in Geologic Repositories,' '' Office of Nuclear Regulatory Research, NUREG–0804, December 1983; p. 11). As such, DOE can expect that its plans and procedures in this area will receive extensive, detailed review by the NRC staff as part of any construction authorization review. The feasibility and reasonableness of DOE's retrieval plans will be reviewed by the NRC staff at the time of the license application submittal. * * * However, the Commission does not envision that DOE will need to build full-scale prototypes of its retrieval systems to demonstrate that its retrieval plans are practicable at the time of construction authorization. Rather, DOE needs to design (and build) the repository in such a way that the retrieval option is not rendered impractical or impossible.

With regard to the time frame for waste retrieval, the Commission stated (66 FR 55743, November 2, 2001):

> Some commenters expressed a belief that the period of waste package retrieval could be accomplished beyond 50 years, and there should be flexibility for extending the period of retrievability to longer time periods. One commenter suggested that the repository should be monitored to determine if there will be problems (*e.g.*, too high a temperature, too much water inflow) that would require the waste to be retrieved. The same commenter suggested that stewardship of the waste be maintained (indefinitely) so that waste could be made available for future energy needs. * * * The 50-year limit on waste retrieval operations was adopted from the generic requirements found at Part 60. At the time Part 60 was first promulgated, the Commission solicited comment on what was then a proposed 100-year retrieval period (46 FR 35282; July 8, 1981). However, after an analysis of public comments, it was determined that the Commission's earlier proposal was excessive, and the shorter 50-year period was decided [up]on (U.S. Nuclear Regulatory Commission, ''Staff Analysis of Public Comments on Proposed Rule 10 CFR part 60, 'Disposal of High-Level Radioactive Wastes in Geologic Repositories,' '' Office of Nuclear Regulatory Research, NUREG–0804, December 1983). In specifying this time period, the Commission noted that the 50-year period was ''provisional'' and subject to possible modification (*i.e.*, longer periods) in light of both the planned waste emplacement schedule and completion of the performance confirmation program and a review of those results. After 50 years of waste emplacement operations and performance confirmation, the Commission previously reasoned, it is likely that significant technical uncertainties will be resolved, thereby providing greater assurance that the performance objectives will be met. It should be noted that DOE is free to design the repository for retrieval periods greater than 50 years. In fact, the Commission understands that DOE is contemplating working designs that may provide for a retrieval period of up to 300 years. * * * Thus, as recommended in this comment, allowance for longer waste retrieval periods greater than 50 years is permitted under the regulation. As for longer retrieval periods that would permit the recovery of the high-level waste as a potential resource, the Commission has previously noted that its retrieval provision is not intended to facilitate recovery. Waste retrieval is intended to be an unusual event only to be undertaken to protect public health and safety.

The Commission also generally addressed assumptions about waste retrieval (66 FR 55743, November 2, 2001):

> One commenter inquired as to the disposition of the waste if it is determined that retrieval is necessary. * * * Part 63 does not specifically address any required actions for the handling of retrieved waste from an operating geologic repository, but * * * Section 63.21(c)(7) [in the final rule] does require that DOE's Safety Analysis Report include a description of its plans for the alternate storage of the radioactive wastes, should retrieval be necessary. Retrieved waste would need to be controlled in compliance with applicable regulations at the time of retrieval.

DOE must justify in a license application any assumptions used in its plans for waste retrieval. DOE must demonstrate that the repository is designed to allow retrieval in a manner that would protect health and safety as well as keeping radiation exposures as low as is reasonably achievable. Neither the Nuclear Waste Policy Act nor 10 CFR part 63 include a requirement for an expedited retrieval in case of sudden catastrophic events, however, NRC would require actions necessary to protect health and safety.

No changes were made to the Yucca Mountain Review Plan in response to this comment.

Issue 2: Does the Yucca Mountain Review Plan adequately address plans for alternate storage of waste?

Comment. One commenter stated that DOE did not address alternate storage of waste in the Yucca Mountain Final Environmental Impact Statement. The commenter asked whether, by including

alternative storage in the Yucca Mountain Review Plan, NRC is inferring its expectation that a license application for a high-level waste repository at Yucca Mountain would cover alternate storage. The commenter noted the Yucca Mountain Review Plan is specific about assumed elements of the repository system, but does not describe such elements earlier in the review plan. The commenter suggested that the Yucca Mountain Review Plan be revised to include NRC expectations of the specific elements of the repository system that would be the subject of a license application.

Response. A review of DOE plans for alternate storage of waste is included within the Yucca Mountain Review Plan because these plans are specifically required by 10 CFR 63.21(c)(7), which requires that DOE's Safety Analysis Report include a description of plans for the alternate storage of the radioactive wastes should retrieval be necessary. Retrieved waste would need to be controlled in compliance with applicable regulations at the time of retrieval. Beyond requiring such plans, the regulations have no specific requirements on this subject. Accordingly, the three components of the related Review Method and Acceptance Criterion for reviewing plans for alternative storage of waste (*i.e.*, the physical location and boundary of the proposed alternate storage area are adequately defined; the proposed alternate storage area is sufficient to hold the waste; and the area is adequate to protect workers and the public during the transport of the waste to alternate storage) are sufficient.

No changes have been made to the Yucca Mountain Review Plan in response to this comment.

4.3 Criticality

Issue: What equipment would be available for addressing criticality accidents?

Comment. One commenter asked what equipment would be available in a repository for high-level waste at Yucca Mountain to deal with criticality accidents.

Response. Pursuant to 10 CFR 63.112(e)(6), DOE must address the potential for criticality accidents during the preclosure period of operations. After any criticality risks have been established, NRC will evaluate whether equipment should be provided to deal with such accidents.

No changes were made to the Yucca Mountain Review Plan in response to this comment.

4.4 Preclosure Safety Analysis

Issue 1: Is the definition of probability associated with Category 2 event sequences adequate?

Comment. One commenter stated that the use of one chance in 10,000 over 300 years is illogical and non-conservative considering the trillions of curies that would be present in a high-level waste repository at Yucca Mountain. The commenter stated that if the criteria for excluding events from Category 2 are based on opinion and speculation, the information could be biased, erroneous, or misleading. The commenter stated that the criteria for Category 2 must be broadened to overcome these inadequacies and that NRC staff needs to be careful when excluding catastrophic events from Category 2.

Response. A licensing review for a high-level waste repository at Yucca Mountain will be conducted in an objective manner to determine whether information is accurate and regulatory standards are met. Error in analyses will be addressed in NRC staff's review of analysis, design, and operations.

The Commission addressed the Category 2 criteria in the ''Statement of Considerations'' for 10 CFR part 63 (66 FR 55741–55742, November 2, 2001) as follows.

> The Commission agrees that the basis for determining the probability for design basis events and what initiating events should be considered in the safety analysis should be clarified. * * * the Commission has revised the rule for clarity as follows: (1) A new term ''initiating event'' is defined; (2) the present term ''design basis event'' is replaced with a new term ''event sequence''; and (3) Section 63.102(f) is revised to clarify the scope of the preclosure safety analysis and the requirements for the inclusion or exclusion of specific, naturally-occurring, and human-induced hazards in the safety analysis.
>
> Initiating events are to be considered for inclusion in the preclosure safety analysis for determining event sequences only if they are reasonable (*i.e.*, based on the characteristics of the geologic setting and the human environment, and are consistent with precedents adopted for nuclear facilities with comparable or higher risks to workers and the public).
>
> * * * * *
>
> Within the context of the ISA (PSA), DOE is expected to identify the relevant initiating events and event sequences and estimate potential radiologic exposures. Part 63 provides flexibility to DOE in selecting an appropriate approach for estimating doses, including selection of pertinent exposure pathways and the degree of conservatism or realism to include in the analysis. DOE will need to defend and support whatever approach it selects for identifying initiating events and analyzing event sequences. In the selection of a particular approach, DOE will need to consider the uncertainties and limitations associated with a particular method of analysis and data.

Regulation of nuclear facilities requires realistic or reasonably conservative approaches that take into account importance to safety, technical complexity, and the degree and nature of any associated uncertainty. These concepts underlie the ''reasonable assurance'' and ''reasonable expectation'' determinations that would be applied in reviewing the DOE license application. However, the Yucca Mountain Review Plan recognizes that, consistent with a risk-informed, performance-based approach, DOE has the flexibility to select an approach that could include reasonably conservative analyses.

The Commission addressed the issue of conservatism in the ''Statement of Considerations'' for 10 CFR part 63 (66 FR 55739–55740, November 2, 2001).

> Confidence that DOE has, or has not, demonstrated compliance with EPA's standards is the essence of NRC's licensing process * * *. The Commission does not believe that NRC's use of ''reasonable assurance,'' as a basis for judging compliance, causes focus on extreme values (*i.e.*, tails of distributions) for representing the performance of a Yucca Mountain repository. Further * * * if the Commission is called on to make a decision * * * the Commission will consider the full record before it. That record will include many factors in addition to whether the site and design comply with the performance objectives (both preclosure and postclosure performance standards) * * *. The Commission could consider the QA program, personnel training program, emergency plan and operating procedures, among others, in order to determine whether it has confidence that there is no unreasonable risk to the health and safety of the public.
>
> The Commission is satisfied that a standard of ''reasonable expectation'' allows it the necessary flexibility to account for inherently greater uncertainties in making long-term projections of a repository's performance. The Commission agrees with EPA and others that it is important to not exclude important parameters from assessments and analyses simply because they are difficult to precisely quantify to a high degree of confidence * * *. The Commission expects that the required analyses of postclosure performance will focus on the full range of defensible and reasonable parameter distributions, and that they should not be constrained only to extreme physical situations and parameter values. For other determinations regarding compliance of the repository with preclosure objectives, the Commission will retain a standard of ''reasonable assurance'' consistent with its practice for other licensed operating facilities subject to active licensee oversight and control.

No changes were made to the Yucca Mountain Review Plan as a result of this comment.

Issue 2: Has an evaluation of the characteristics of the controlled area been included in the Yucca Mountain Review Plan?

Comment. One commenter stated that no mention could be found in the Yucca Mountain Review Plan of the size and location of the controlled area. The commenter argued that specification of the controlled area is a key factor in the licensing process and must be addressed in a license application and in the NRC review.

Response. The controlled area is defined by 10 CFR part 63.302. This is addressed in Section 4.1.1.1, ''Site Description as It Pertains to Preclosure Safety Analysis'', of the draft Yucca Mountain Review Plan.

The Yucca Mountain Review Plan was modified to include reference to the controlled area, where appropriate.

Issue 3: Does the Yucca Mountain Review Plan adequately evaluate radiation exposures during the preclosure operations at a potential high-level waste repository at Yucca Mountain?

Comment. One commenter noted that the Yucca Mountain Final Environmental Impact Statement indicated that the predominant radiological impacts during the preclosure period would be from radon releases. The commenter stated that the Yucca Mountain Review Plan does not address radiological safety associated with potential radon releases and associated worker exposures. The commenter suggests that these potential safety issues be added to the review.

Response. Safety issues related to radiation exposure, including radon, during the preclosure period are covered in the Yucca Mountain Review Plan. DOE is required by 10 CFR 63.111 to use a preclosure safety analysis to evaluate compliance with performance objectives for the preclosure period. A preclosure safety analysis proceeds from an identification of hazards, events, and event sequences to assessments of consequence and risk. This process includes an evaluation of radiation hazards and risks. The Yucca Mountain Review Plan reflects a thorough review of DOE's preclosure safety analysis as set forth in Section 4.1.1, ''Preclosure Safety Analysis,'' of the draft Yucca Mountain Review Plan.

No changes were made to the Yucca Mountain Review Plan in response to this comment.

4.5 Structures, Systems, and Components of the Subsurface Facility

Issue: Will the design, construction, control, and quality assurance of the waste canisters be adequate?

Comment. Commenters expressed a number of concerns about the standards to be used for waste canisters. One commenter raised a number of concerns regarding how the quality assurance requirements would be met for structures, systems, and components important to safety, safety controls, and measures to ensure availability of safety systems.

Response. If the waste canisters are important both to safety and to waste isolation, their design, manufacture, and performance would be subject to NRC's quality assurance requirements. These requirements are defined in 10 CFR part 63, subpart G, and are consistent with NRC's quality assurance standards for other nuclear facilities. DOE must satisfy these quality assurance requirements by performing planned and systematic actions necessary to provide confidence that the geologic repository and its structures, systems, and components will perform satisfactorily.

The regulations require that quality assurance requirement for systems, structures, and components be evaluated during a licensing review for a high-level waste repository at Yucca Mountain. NRC staff would use the quality assurance requirements in 10 CFR part 63, subpart G to determine whether the program was adequate.

No changes were made to the Yucca Mountain Review Plan as a result of this comment.

4.6 Alternative Designs

Issue: Should alternative designs be examined in a license application for a high-level waste repository at Yucca Mountain?

Comment. One commenter was concerned that nowhere in the Yucca Mountain Review Plan is there clear direction to NRC staff reviewers to ensure that DOE, in its application and supporting documents, has adequately considered alternative repository designs. The commenter noted that the subject is touched on in draft Yucca Mountain Review Plan Section 4.3, ''Research and Development Program to Resolve Safety Questions,'' however, this section does not specifically address alternative designs, outside of the scope of the research and development program, to resolve safety questions.

The commenter noted that because DOE's design could be contested during licensing, and Nye County, Nevada, the Nuclear Waste Technical Review Board, and others believe that a cooler repository would reduce uncertainties in long-term performance, NRC staff reviewers should take steps to ensure that the DOE license application is complete and of high quality on that issue. The commenter concluded that a thorough and comprehensive test of DOE's design, specifically with respect to reducing thermal effects and the potential for water to contact the waste packages, should be a minimum test of the adequacy and completeness of a DOE license application for a high-level waste repository at Yucca Mountain.

Response. The question as to whether DOE must consider alternative repository designs was previously addressed by the Commission in its ''Statement of Considerations'' for 10 CFR part 63 (66 FR 55748–55749, November 2, 2001) as follows:

> The Commission agrees with the comments and has removed [this requirement to evaluate alternative designs] from the regulations. The NRC review should focus on the safety aspects of DOE's proposed approach. DOE should only be required to propose alternatives from its proposed approach in areas where the NRC review determines DOE's approach is deficient. When developing proposed part 63, the NRC staff adopted this requirement from 10 CFR part 60, the existing generic NRC high-level waste disposal regulation, which contains a similar requirement in 10 CFR 60.21(c)(1)(ii)(D). At the time of the issuance of part 60, DOE objected to this specific requirement with basically the same argument presented for Part 63. In the ''Statement of Considerations'' for part 60 (published in [the] **Federal Register** [notice] on June 21, 1983; 48 FR 28194), the Commission justified the requirement by stating ''If the Commission finds, on the basis of its review, that the adoption of some alternative design feature would significantly increase its confidence that the performance objectives would be satisfied, and that the costs of such an approach are commensurate with the benefits, it should not hesitate to insist that the alternative be adopted.''
>
> The decision to require DOE to submit alternatives for certain site design features was a discretionary action on the part of the Commission as nothing (in either the Atomic Energy Act of 1954, as amended, or the Nuclear Waste Policy Act of 1982, as amended) required the Commission to obtain information on alternative designs at the site level. At the time part 60 was initially published (1983), the Commission implemented an appropriate regulatory framework for a generic program facing many uncertainties. Multiple sites with very different geological settings were under consideration. The NRC's generic HLW regulations had to address the resolution of a large number of technical issues in the relative short licensing review period established by the Nuclear Waste Policy Act of 1982. With all the uncertainties in the program, the Commission believed it was important to require design alternatives be submitted with the application to increase the probability of NRC approval of the license application within the three-year schedule mandated by Congress.

The Commission has revisited the decision to require submission of alternative designs. Specifically, the Commission no longer believes this information should be submitted with a license application and, accordingly, has removed this requirement. To protect public health and safety and the common defense and security, which is the NRC's mandate under the Atomic Energy Act of 1954 as amended, the Commission will closely scrutinize the design proposed by DOE. Consistent with this mandate, the new part 63 is designed to be a risk-informed, performance-based regulation which establishes overall repository performance objectives. DOE must demonstrate that the repository meets the performance objectives. The NRC review is an audit of DOE's demonstration to determine if we agree that the performance objectives have been met. If the NRC believes that the site does not meet the performance objectives within uncertainties addressed in the analysis, then it is DOE's responsibility to either defend its current design or propose an alternative design that can meet the NRC acceptance criteria.

Because thermal effects and the potential for water to contact the waste packages may be important considerations in the design of a potential high-level waste repository at Yucca Mountain, DOE would need to provide an assessment of the thermal operating range for a design in its license application. The NRC staff will determine, before docketing, whether the information provided is sufficient for NRC to conduct its review.

No changes have been made to the Yucca Mountain Review Plan in response to this comment.

5 Postclosure Period

5.1 Consistency With Postclosure Requirements in 10 CFR Part 63

Issue 1: Should the text in the postclosure sections of the Yucca Mountain Review Plan be modified to more closely reflect the language of 10 CFR part 63?

Comment. Several commenters identified places where the text of the Yucca Mountain Review Plan could be revised to better reflect the language of postclosure requirements in 10 CFR part 63, subpart L. One commenter noted several places where text should be modified to refer to the dose to the reasonably maximally exposed individual rather than more general terms such as average annual dose. Another commenter noted incorrect citations in Section 4.2.1.3.14.4 of the draft Yucca Mountain Review Plan. Additional comments indicated several locations where the draft Yucca Mountain Review Plan text on postclosure public health and environmental protection (Section 4.2.1.4) could be modified to be more consistent with the requirements of 10 CFR part 63, subpart L.

Response. The text in the Yucca Mountain Review Plan should accurately reflect the language and intent of 10 CFR part 63.

The Yucca Mountain Review Plan has been modified, as appropriate, to provide correct references to the postclosure requirements in 10 CFR part 63. Text citations for the required characteristics of the reference biosphere [10 CFR 63.305(a–d)] have been corrected as needed. Also, text in Section 4.2.1.4 of the draft Yucca Mountain Review Plan has been modified to improve consistency between the review methods and acceptance criteria and the postclosure public health and environmental standards specified in 10 CFR part 63, subpart L.

Issue 2: Is the description of the representative volume consistent with NRC regulations in 10 CFR 63.312?

Comment. Several commenters stated that the use of a representative volumes of groundwater in Sections 4.2.1.3.12, ''Representative Volume,'' and 4.2.1.4.3, ''Analysis of Repository Performance that Demonstrates Compliance with Separate Ground-Water Protection Standards,'' of the draft Yucca Mountain Review Plan is not consistent with U.S. Environmental Protection Agency and NRC implementation regulations at 10 CFR part 63.

Response. Section 4.2.1.3.12 of the draft Yucca Mountain Review Plan confuses the concept of water demand for the postclosure individual protection standard with the concept of the representative volume of water for the postclosure ground-water protection standard.

The postclosure individual protection standard at 10 CFR 63.111 requires that DOE demonstrate the reasonably maximally exposed individual would receive an annual cumulative effective dose equivalent of no more than 150 microsieverts. Under 10 CFR 63.312(c), the reasonably maximally exposed individual will use ''well water with concentrations of radionuclides based on an annual water demand of 3,000 acre-feet.'' 10 CFR part 63 also mandates use of the representative volume of water concept in demonstrating compliance with the separate ground-water protection standards. The definition of the representative volume of water also specifies a volume of 3,000 acre-feet per year; however, the applicant must also define the dimensions of this volume using one of two specified methods.

The Yucca Mountain Review Plan has been modified to clarify these requirements.

Issue 3: Are the review methods and acceptance criteria for evaluating the demonstration of compliance with the human-intrusion standard adequate?

Comment. One commenter stated that the review methods and acceptance criteria for evaluating the demonstration of compliance with the human-intrusion standard are not complete or consistent with NRC regulations at 10 CFR part 63. For example, the commenter expressed concern that the review methods in Section 4.2.1.4.2.1, ''Demonstration of Compliance with the Human Intrusion Standard,'' of the draft Yucca Mountain Review Plan indicate that the review need only confirm that performance assessment for human intrusion is performed during the 10,000-year regulatory time period. The commenter also noted that, if the projected doses from an intrusion reach the reasonably maximally exposed individual after the 10,000-year regulatory time period, 10 CFR 63.321 requires DOE to include the results of the analysis and its basis in the Yucca Mountain environmental impact statement. The commenter also stated that the draft Yucca Mountain Review Plan does not call for DOE to identify the specific mechanism for radionuclide transport from a breached waste package to the saturated zone.

Response. The review methods in Section 4.2.1.4.2.2 of the draft Yucca Mountain Review Plan have been modified to clarify that the human-intrusion performance assessment should be conducted regardless of the estimated time of the intrusion. The review methods have also been modified to note that 10 CFR 63.321 requires that exposures to the reasonably maximally exposed individual that might result from human intrusion and occur after the 10,000-year regulatory time period are to be included in the Yucca Mountain environmental impact statement. In addition, the regulations at 10 CFR 63.322 require that DOE consider the transport of radionuclides in ground water through the borehole to the saturated zone. The Yucca Mountain Review Plan, however, is guidance for NRC staff safety review and will not be used to review DOE's environmental impact statement. Environmental reviews would be performed according to the requirements of 10 CFR 51.109, and applicable guidance.

The review methods in Section 4.2.1.4.2.2 of the draft Yucca Mountain Review Plan have been modified for clarification.

5.2 Multiple Barriers

Issue 1: Will the Yucca Mountain Review Plan consider limitations of each barrier's capability?

Comments. Commenters argued that numerous unresolved questions remain with respect to the engineered and natural barriers (*e.g.*, durability of the waste package, amount of water flowing into repository drifts) that raise concerns regarding how the Yucca Mountain Review Plan considers the limitations in barrier capabilities. Commenters asked a number of questions regarding how specific systems, subsystems, and components of the repository would perform.

Response. In accordance with 10 CFR 63.115, NRC staff's review of the capability of each barrier relied upon by DOE will include consideration of uncertainty in the behavior of the barriers. Additionally, the barrier capability is to be described in terms of the approaches used in the performance assessment, which include potential limitations in barrier capabilities, through consideration of uncertainty in parameters; alternative conceptual models; and degradation, deterioration, and alteration processes of the engineered barriers. Each of the model abstractions (*i.e.*, degradation of engineered barriers, flow paths in the saturated zone) in the Yucca Mountain Review Plan includes consideration of potential limitations in the representation of the repository barriers. The Yucca Mountain Review Plan supports a detailed review of repository barriers and provides understanding of the intended function of each of the barriers and of the potential limitations regarding individual barrier performance. The concerns noted in the comment must be adequately addressed in a DOE license application for a high-level waste repository at Yucca Mountain.

Section 4.2.1.1, ''System Description and Demonstration of Multiple Barriers,'' of the draft Yucca Mountain Review Plan indicates that: (i) There are no quantitative limits placed on individual barriers or categories of barriers; and (ii) the intent of the review is to understand the capability of each barrier to perform its intended function and the relationship of that barrier's role to limiting radiological exposure in the context of the overall performance assessment.

Issue 2: Does the Yucca Mountain Review Plan appropriately describe potential barrier functions?

Comment. The commenter recommended that the exact wording from the definition of barrier in 10 CFR part 63 (that is, prevents or substantially reduces the rate of movement of water or radionuclides from the Yucca Mountain repository to the accessible environment, or prevents the release or substantially reduces the release rate of radionuclides from the waste) be used to describe the potential functions of the barriers in Sections 4.2.1.1.1, ''System Description and Demonstration of Multiple Barriers,'' of the draft Yucca Mountain Review Plan.

Response. Use of the exact wording from the definition of barrier in 10 CFR 63.2 to describe the potential functions of the barriers in the Yucca Mountain Review Plan is appropriate and the Yucca Mountain Review Plan has been modified accordingly.

Issue 3: Should the Yucca Mountain Review Plan specify that a specific natural or engineered barrier be the primary barrier for the repository?

Comment. Some commenters were concerned that current expectations for the waste package to be corrosion-resistant for more than 10,000 years reduce the requirement that the repository include natural or geologic barriers. One commenter requested that the repository be required to be substantially geologic. Another commenter asked that Section 4.2.1.1, ''System Description and Demonstration of Multiple Barriers,'' of the draft Yucca Mountain Review Plan clarify that neither natural nor engineered barriers need be the primary barriers for containing radionuclides, reflecting that overall performance of the repository is important, rather than subsystem requirements.

Response. The regulations at 10 CFR 63.115 require DOE to identify the barriers of the repository system, describe the capabilities of the barriers, and provide the technical basis for each barrier's capability. The Yucca Mountain Review Plan addresses this requirement.

No changes have been made to the Yucca Mountain Review Plan in response to this comment.

5.3 Screening Features, Events, and Processes

Issue 1: How will NRC determine whether the appropriate features, events, and processes have been included in a postclosure performance assessment?

Comment. Several commenters expressed concern whether DOE would provide a complete evaluation of features, events, and processes, in developing its postclosure performance assessment (similar in concept to the Category 1 and 2 initiating events in the preclosure section of the Yucca Mountain Review Plan). One commenter proposed establishing a Category 3 that would encompass natural and man-made events and stated that the total system performance assessment should include an analysis of climate changes over 10,000 years. Additional comments on specific potential disruptive scenarios included were provided.

Several commenters cited the current DOE design plans calling for titanium drip shields as evidence that the Yucca Mountain environment contains significant amounts of water, and expressed concern that this water and the geochemically oxidizing environment for the proposed repository would lead to corrosion of the waste packages. Commenters also expressed concern about the performance of Alloy C–22 and cladding, and requested specific technical information on engineered materials performance.

Another commenter expressed concern that if the consequence of an event were high, it must be considered in the performance assessment, regardless of the probability of its occurrence. The same commenter took exception to the use of the term ''credible natural events,'' arguing that this was an artificial means of removing disruptive events from further consideration for mitigation. One commenter asked whether microbial influenced events were being evaluated.

Response. Consideration of features, events, and processes, especially those with potentially adverse effects, is a key part of the performance assessment process. A number of features, events, and processes have been or are being considered relevant to the performance of the proposed repository at Yucca Mountain. DOE has the responsibility to prepare the postclosure performance assessment and demonstrate compliance with the postclosure performance objectives of 10 CFR 63.113. In meeting the performance objectives, the regulations in 10 CFR 63.114 require DOE to consider pertinent features, events, and processes. As described in Section 4.2.1.2, ''Scenario Analysis and Event Probability,'' of the draft Yucca Mountain Review Plan, it is anticipated that DOE would screen an initial list of features, events, and processes that include the issues raised by the commenters. The purpose of the screening is for DOE to develop a final list that will be considered in detail in its postclosure performance assessment. DOE must provide a technical basis for the inclusion or exclusion of features, events, and processes from the performance assessment. As defined in 10 CFR 63.114(d), one of the screening

criteria is to establish as credible only those events with a probability of occurrence of one chance in 10,000 per year over 10,000 years. As discussed in Section 4.2.1.2 of the draft Yucca Mountain Review Plan, DOE must provide the technical basis for screening events based on probability.

Based on prelicensing exchanges and on earlier iterative performance assessments provided by DOE, NRC anticipates that DOE would include many of the features, events, and processes identified by the commenters (*e.g.*, climate change, volcanic disruption, seismic activity, glaciation, groundwater transport) in its performance assessment. If other features, events, and processes identified by the commenter are excluded from the postclosure performance assessment, DOE must include the technical bases for the exclusions as expressed by 10 CFR 63.114(e). Part of this technical basis must include site characterization information such as groundwater chemistry, location of faults and igneous features, and geomorphology.

To support the postclosure performance assessment, DOE is required to submit data on the hydrology, geochemistry, and geology of the Yucca Mountain site by 10 CFR 63.114(a). Specific information of the type identified in several comments (groundwater temperature, fluoride concentration, C–22 alloy performance) is the responsibility of DOE. NRC staff will evaluate the adequacy of this information as part of a licensing review, using the review methods and acceptance criteria presented in the Yucca Mountain Review Plan.

No changes were made to the Yucca Mountain Review Plan in response to these comments.

Issue 2: Why do the review methods in the Yucca Mountain Review Plan specify time and extent of past patterns of natural events?

Comment. A comment stated that review methods for probability models refer to site-specific information that NRC staff should consider during a review of a license application. The commenter argued that this information is too prescriptive and based on NRC judgements of what is important for probability models. The commenter asks for a more generalized discussion in Review Methods 2 and 3 of Section 4.2.1.2.2, ''Identification of Events with Probabilities Greater Than 10^{-8} Per Year,'' of the draft Yucca Mountain Review Plan. The same commenter also expressed concern that the past patterns of natural events in the Yucca Mountain region provide overly prescriptive information for NRC staff review of probability models.

Response. In using Acceptance Criterion 2 of Section 4.2.1.2.2, NRC staff would consider the past patterns of natural events in the Yucca Mountain region. This acceptance criterion is used considering the range of information that NRC staff may consider with respect to the timing and general extent of past events. Thus, Review Method 2 provides general guidance regarding the timing (*e.g.*, ''past igneous activity since about 12 million years'') and extent (*e.g.*, ''within about 50 kilometers of the proposed repository site'') of past natural events to provide a basis for use of Acceptance Criterion 2. DOE is not restricted to these general definitions for past patterns of natural events and may provide any technical basis that it believes demonstrates compliance with the requirements of 10 CFR 63.114(a)(4).

As noted in Acceptance Criterion 2, an appropriate technical basis for probability estimates would be based on past patterns of natural events in the Yucca Mountain region. Acceptable probability models would be based on past events in the Yucca Mountain region; however, these models may incorporate additional considerations, as deemed appropriate by DOE. These additional considerations would be reviewed by NRC staff in a licensing review.

No changes were made to the Yucca Mountain Review Plan as a result of this comment.

Issue 3: Why do the review methods call for use of independently developed probability models?

Comment. A commenter stated that Section 4.2.1.2.2, ''Identification of Events with Probabilities Greater Than 10^{-8} Per Year,'' of the draft Yucca Mountain Review Plan, refers to the use of independently developed probability models. The commenter noted that more specific guidance to reviewers is needed for the use of independent probability models, and that use of independent models would bias NRC staff reviews.

Response. In its licensing review, NRC staff considers information submitted by the license applicant and results of independent NRC staff analyses. The use of independent probability models enables NRC staff to focus on those areas that are most important to risk consistent with a risk-informed, performance-based approach.

Guidance on the use of independent models in Review Method 3 of Section 4.2.1.2.2 has been modified.

Issue 4: Is it appropriate to relate igneous activity to other geologic processes?

Comment. One commenter asserted that igneous activity is incorrectly related to other geologic processes. The commenter also stated that the use of tectonic models in Acceptance Criterion 3 and Review Method 3 of Section 4.2.1.2.2, ''Identification of Events with Probabilities Greater Than 10^{-8} Per Year,'' of the draft Yucca Mountain Review Plan is overly prescriptive and that the consideration of information from comparable volcanic systems outside the Yucca Mountain region in Review Method 4 of Section 4.2.1.2.2 also appears overly prescriptive.

Response. Review Method 3 in Section 4.2.1.2.2 states ''Assess whether igneous-activity probability models are consistent with the range of tectonic models used to assess other geological processes, such as seismic source characterization, site geological models, and patterns of ground-water flow.'' This statement does not relate igneous activity to other geologic processes through tectonic processes. Rather, it instructs reviewers to evaluate the consistency between tectonic models used in igneous activity probability models with tectonic models used to evaluate other geologic processes. Consistent use of tectonic models for different, relevant geologic processes may provide support for probability models.

Not all parameters used in a probabilistic volcanic hazard assessment for Yucca Mountain would necessarily need to consider information from comparable volcanic systems. Paragraph 2 of Review Method 4 of Section 4.2.1.2.2 has been rewritten to clarify this point.

Issue 5: Does the Yucca Mountain Review Plan contain excessively prescriptive requirements with regard to the use of analog information to assess the effects of igneous activity on repository performance?

Comment. The commenter argued that use of analog information ''to the extent possible'' as discussed in Acceptance Criterion 3 of Section 4.2.1.2.2 is overly prescriptive and suggested use of analog information only ''to the extent appropriate.'' The same commenter also suggested changing requirements for the accuracy of probability models to avoid excess prescriptiveness.

Response. DOE may submit any information it believes will satisfy the requirements of 10 CFR 63.114(a)(4). The use of information from analog volcanic fields, to the extent appropriate, could be used as a basis for model justification.

The text of the Yucca Mountain Review Plan has been modified to

clarify that analog information should be used to the extent appropriate.

5.4 Model Abstraction

Issue 1: What site characterization information would be included in the postclosure performance assessment?

Comment. A number of commenters provided examples of features, events, and processes that they contended should be included in the postclosure performance assessment. These included general lists of information on characteristics of the geologic and hydrologic setting, an inventory of potential corrosives from waste canisters, and climatologic information. One commenter stated that the performance assessment should include types of indirect information that may indicate the occurrence of past natural disruptive events. The same commenter noted that the general description should include trends in seismic and volcanic activity, as well as a study of volcanically active regions in the Cascade Mountains, and should evaluate the possibilities of similar activity at Yucca Mountain.

Response. DOE has the responsibility to prepare the postclosure performance assessment and demonstrate compliance with the performance objectives of 10 CFR 63.113. 10 CFR 63.114 requires DOE to provide a technical basis for the inclusion or exclusion of features, events, and processes in the performance assessment. This technical basis would include site characterization information.

No changes were made to the Yucca Mountain Review Plan as a result of this comment.

Issue 2: How would uncertainty be addressed in the model abstractions used in the postclosure performance assessment?

Comment. A number of comments were provided on uncertainties related to the engineered barriers and natural system, and how these uncertainties would be addressed in the review of a postclosure performance assessment. One commenter expressed concern that there were inconsistencies in how the alternative conceptual models are to be used in evaluating uncertainty in the postclosure performance assessment. Another commenter asked how NRC would consider uncertainties in reviewing DOE's performance assessment and requested more detail on the role uncertainty would play in establishing priorities for the licensing decision. Another commenter noted concerns about the basis for performance assessment model abstractions expressed in letters from the Advisory Committee on Nuclear Waste to NRC Chairman Richard Meserve (September 28, 2001; and January 17, 2002).

Response. Accounting for uncertainty in estimating repository performance is an important factor in the evaluation of DOE's license application. The regulations at 10 CFR 63.114 and 63.304 require the performance assessment to provide for the full range of defensible and reasonable parameters and models, and account for uncertainty. NRC staff review will evaluate the nature and magnitude of the uncertainties and the impact of uncertainty on repository performance. Consideration of alternative models is one means of evaluating the conceptual model uncertainty in performance assessment. The postclosure performance assessment requirements in 10 CFR 63.114(c) require DOE to consider alternative conceptual models of features and processes that are consistent with available data and current scientific understanding and to evaluate the effects that alternative conceptual models have on the performance of the geologic repository. The Yucca Mountain Review Plan provides guidance regarding review of these requirements and that DOE has the flexibility to demonstrate compliance, consistent with a risk-informed, performance-based licensing approach.

As discussed in the ''Statement of Considerations'' for 10 CFR part 63 (66 FR pp. 55747–55748, November 2, 2001), the Commission recognizes ''* * * the uncertainties inherent in evaluating a first-of-a-kind facility like the repository and in estimating system performance over very long time periods (*i.e.*, 10,000 years).'' In response to these uncertainties, NRC modified 10 CFR part 63 to require that DOE include uncertainty in its postclosure performance assessment and provides sufficient information to allow NRC to evaluate DOE's uncertainty analysis. For example, 10 CFR 63.114(b) requires DOE to account for uncertainties and parameter variability, and to provide the technical bases for its treatment of uncertainty in the postclosure performance assessment. In addition, DOE is required by 10 CFR 63.114(c) to provide additional assurances that uncertainty in the information (*e.g.*, evaluation of site characterization data) used to develop the performance assessment has been evaluated by consideration of alternative conceptual models of features and processes that are consistent with available data and current scientific understanding. The regulation at 10 CFR 63.113(g) provides that DOE conduct corroborative testing of its performance assessment to the extent feasible, and for DOE to use additional bases beyond performance assessment to compensate for uncertainty and to provide confidence that the postclosure performance objectives of 10 CFR 63.113 are met. For example, 10 CFR part 63, subpart F, requires that a performance confirmation program confirm that the behavior of the barriers of the repository system is consistent with assumptions in the performance assessment. Further, 10 CFR 63.113 and 10 CFR part 63, subpart G, require use of multiple barriers and a quality assurance program.

As described in the ''Statement of Considerations'' for 10 CFR part 63 (66 FR 55747–55748, November 2, 2001):

> The Commission will consider all these requirements in determining whether it has sufficient confidence (*i.e.*, reasonable expectation) that DOE has demonstrated or has not demonstrated the safety of the repository. Specification of an acceptable level of uncertainty is neither practical nor appropriate due to the limited knowledge currently available to support any such specification and the range of uncertainties that would need to be addressed. The Commission believes the approach to performance assessment in the proposed rule, which includes the treatment of uncertainty, is appropriate and has retained this approach in the final rule.
>
> * * * * *
>
> If NRC were to specify an acceptable level of uncertainty, the specified value would be somewhat arbitrary because: (1) Understanding of the site is evolving as site studies continue; (2) repository design options are still being evaluated; and (3) differences in the types of uncertainties (*e.g.*, variability in measured parameters, modeling assumptions, expert judgment, *etc.*) complicate the specification.
>
> * * * * *
>
> Although the Commission does not require an ''accurate'' prediction of the future, uncertainty in performance estimates cannot be so large that the Commission cannot find a reasonable expectation that the postclosure performance objectives will be met (*see* discussion under ''Reasonable Expectation'') [Section 1.4, 66 FR 55739–55740]. At this time, the Commission is not aware of any information that suggests the uncertainties are so large that NRC will be unable to make a regulatory decision regarding the safety of a potential repository at Yucca Mountain.

Each of the performance assessment model abstractions, provided in Section 4.2.1.3, ''Model Abstraction,'' of the draft Yucca Mountain Review Plan, provides specific review methods and acceptance criteria that address both data uncertainty (parameter variability) and model uncertainty (whether the model is adequate and appropriate). Therefore, the review methods and

acceptance criteria in the Yucca Mountain Review Plan provide sufficient guidance to evaluate DOE's treatment of uncertainty against the requirements of 10 CFR part 63.

Suggested editorial changes were made to the Yucca Mountain Review Plan in response to these comments.

5.5 Compliance With Postclosure Public Health and Environmental Standards

Issue: What is the expected groundwater contamination from the repository?

Comment. One commenter expressed concern that the proposed repository at Yucca Mountain could have long-term impacts on groundwater quality.

Response. The groundwater pathway is a potential exposure pathway as identified in previous DOE and NRC performance assessments for a proposed high-level waste repository at Yucca Mountain. Groundwater will be protected provided DOE can demonstrate that the groundwater protection standard in 10 CFR part 63.331 and 63.332 are met.

Several Sections 4.2.1.3.6, ''Flow Paths in the Unsaturated Zone,'' 4.2.1.3.7, ''Radionuclide Transport in the Unsaturated Zone,'' 4.2.1.3.8, ''Flow Paths in the Saturated Zone,'' and 4.2.1.3.9, ''Radionuclide Transport in the Saturated Zone,'' of the draft Yucca Mountain Review Plan provide specific review methods and acceptance criteria to evaluate whether DOE's abstraction of groundwater flow and radionuclide transport satisfies the postclosure performance objectives at 10 CFR 63.113. In addition, as discussed in the ''Statement of Considerations'' for 10 CFR part 63 (66 FR 55758, November 2, 2001):

> The Commission has commented previously that an individual, all-pathway dose limit of either 0.15–mSv (15–mrem) or 0.25–mSv (25–mrem) TEDE ensures that the risks from all radionuclides and all exposure pathways, including the ground-water pathway, are acceptable and protective. The EPA itself acknowledged, in publishing final standards for Yucca Mountain, that an ''* * * Individual Protection Standard is adequate in itself to protect public health and safety.'' However, ultimately, the EPA had to make the decision whether to include separate requirements for groundwater protection and the final EPA standards for Yucca Mountain include such requirements for the purpose of protecting groundwater. Therefore, as required by law, final Part 63 requirements incorporate final U.S. Environmental Protection Agency standards for Yucca Mountain at 40 CFR part 197, including separate ground-water protection requirements. These requirements, sections 197.30 and 197.31, appear in the final 10 CFR part 63 regulations as sections 63.331 and 63.332, respectively.

The Yucca Mountain Review Plan has been revised to ensure consistency with the groundwater protection standards in 10 CFR 63.331 and 10 CFR 63.332. These changes, combined with the review methods and acceptance criteria in Section 4.2.1.3, ''Model Abstraction,'' of the draft Yucca Mountain Review Plan, will ensure that the NRC review of DOE's license application takes into account DOE's demonstration of compliance with the applicable postclosure performance objective and groundwater protection standards.

5.6 Postclosure Monitoring

Issue: Would there be control over the Yucca Mountain site after permanent closure and license termination?

Comment. Several commenters expressed concern about the extent of NRC oversight activities after permanent closure of a high-level waste repository at Yucca Mountain. One commenter asked about plans for monitoring ambient radiation in the drifts and tunnels after permanent closure. Another commenter requested information on security and physical protection plans for the repository after permanent closure. Other commenters asked NRC to provide a postclosure plan for waste retrieval and whether the Yucca Mountain Review Plan addressed possible postclosure terrorist problems and the postclosure performance assessment.

Response. If DOE is granted a license, it may seek an amendment under 10 CFR 63.51 for permanent closure of a high-level waste repository at Yucca Mountain. As part of its amendment request, DOE must submit its program for continued oversight, including a description of a program for postclosure monitoring of the repository, and a detailed description of measures to regulate or prevent activities that could impair the long-term performance of the repository. NRC will review the adequacy of DOE's programs for continued oversight following permanent closure and decontamination of surface facilities.

DOE may also apply for license amendment to terminate the license pursuant to 10 CFR 63.52. NRC will terminate the license if it finds that final waste disposition conforms to DOE's plan, as amended and approved as part of the license, and the geologic repository operations area conforms to plans for permanent closure and decontamination or decontamination and dismantlement of surface facilities.

Section 122 of the Nuclear Waste Policy Act provides for retrieval of any spent fuel for any reason pertaining to public health and safety, or the environment, or for the purpose of permitting the recovery of the economically valuable contents of spent fuel. The implementing regulations at 10 CFR part 63 provide for retrieval of waste before permanent closure of the repository. During a period of waste disposal that may extend over several decades, DOE is required by license to maintain performance confirmation, monitoring, and security programs to ensure that the natural and engineered components assumed to operate as barriers during permanent closure of the repository are functioning as intended and anticipated at the time of license application. Thus, it is DOE that must legally provide security for the Yucca Mountain site. NRC staff will evaluate whether the security measures would be adequate to protect the site.

NRC will conduct an inspection program to ensure that DOE complies with its license. DOE is not required to have plans in place for retrieval or security after permanent closure of the repository.

The draft Yucca Mountain Review Plan Section 4.5.8, ''Controls to Restrict Access and Regulate Land Uses,'' examines compliance with the requirements for ownership and control of interests in land. The scope of these regulatory requirements includes, among others, land acquisition and withdrawal, acceptability of controls through and for permanent closure, control over surface and subsurface estates, and design of monuments to identify the site. Draft Yucca Mountain Review Plan Section 4.5.9, ''Uses of the Geologic Repository Operations Area for Purposes Other Than Disposal of Radioactive Wastes,'' examines procedures for conduct and continuing oversight of proposed activities. These two sections of the Yucca Mountain Review Plan enable NRC staff to determine whether adequate security would be provided for the site after permanent closure.

No changes were made to the Yucca Mountain Review Plan in response to this comment.

6 Research and Development Program To Resolve Safety Issues

6.1 Scope of the Research and Development Program To Resolve Safety Questions

Issue: What is the appropriate scope of the research and development program to resolve safety issues?

Comment. One commenter expressed concern about the text in the ''Areas of Review'' for Section 4.3, ''Research and

Development Program to Resolve Safety Questions,'' of the draft Yucca Mountain Review Plan. The commenter stated that the research and development program was not intended to address the adequacy of site characterization or natural barriers, as the review plan currently states. The commenter argued that the adequacy of information on these two topics should be demonstrated in the license application as submitted and that it is not acceptable to use the research and development program to resolve safety questions to complete work that should have been done before the submittal of the license application.

Response. The applicable regulation, 10 CFR 63.21(c)(16), states that the license application shall contain ''an identification of those structures, systems, and components of the geologic repository, both surface and subsurface, that require research and development to confirm the adequacy of design. For structures, systems, and components important to safety and for the engineered and natural barriers important to waste isolation, DOE shall provide a detailed description of the programs designed to resolve safety questions, including a schedule indicating when these questions would be resolved.''

The research and development program to resolve safety questions should be used appropriately to address questions as appropriate. The regulation recognizes that some research and development programs are confirmatory in nature while others resolve safety questions. The license application should contain sufficient information on site characterization and natural barriers to enable NRC staff to conduct a detailed review of the application.

The text of Section 4.3 of the draft Yucca Mountain Review Plan has been revised to narrow the scope of the research and development program to resolve safety questions.

7 Performance Confirmation

7.1 Performance Confirmation Program

Issue 1: Are the acceptance criteria for performance confirmation monitoring and testing too prescriptive?

Comment. Commenters stated that Section 4.4, ''Performance Confirmation Program,'' of the draft Yucca Mountain Review Plan is more prescriptive than 10 CFR part 63 regarding specific performance confirmation testing and monitoring citing specific examples including cases where the language used in Section 4.4 was not identical to language used in subpart F of 10 CFR part 63. One commenter stated that Section 4.4, like 10 CFR part 60, is prescriptive with regard to requirements for particular barriers, and inconsistent with the risk-informed, performance-based approach in 10 CFR part 63. Commenters stated that DOE would determine the parameters, measurements, and observations that are appropriate for inclusion in the performance confirmation program based on their importance to confirming repository performance and to the uncertainties in that performance.

Response. DOE has the responsibility to determine the parameters, measurements, and observations to be included in a performance confirmation program. As stated in ''Statement of Considerations'' for final 10 CFR part 63 (66 FR 55745, November 2, 2001) ''The Commission believes that it is DOE's responsibility to specify the important geotechnical and design parameters to be evaluated through observation and measurement during construction and operation, subject to NRC approval through review and evaluation of the license application. DOE will provide this information in their performance confirmation plan included in the license application. If necessary, NRC staff will provide guidance to DOE in this area through pre-licensing interactions and/or the Yucca Mountain Review Plan.''

With respect to the examples of inconsistency with language in subpart F of 10 CFR part 63, the recommended changes were accepted, and Section 4.4 has been modified accordingly. However, the fact that a specific parameter or process is not mentioned in the regulation, does not necessarily mean that parameter or process should not be considered for inclusion in the performance confirmation program. Such decisions should be made using risk-informed, performance-based approach. In developing 10 CFR part 63, the Commission chose not to adopt an approach that would prescribe in detail the specifics and limits of a performance confirmation program to allow DOE the flexibility to develop a focused and effective performance confirmation program (66 FR 55745, November 2, 2001).

Section 4.4 of the draft Yucca Mountain Review Plan has been modified for consistency with 10 CFR part 63.

Issue 2: Are the acceptance criteria for procedures supporting the performance confirmation program too prescriptive?

Comment. Commenters stated that the draft Yucca Mountain Review Plan is more prescriptive than 10 CFR part 63 regarding procedures supporting the performance confirmation program. A commenter stated that DOE should have the flexibility to determine the context in which procedures need to be developed and that such procedures may be developed after a license application for construction authorization is submitted. There were also a number of detailed comments specifically related to procedures supporting a performance confirmation plan.

Response. The Yucca Mountain Review Plan recognizes that DOE has the flexibility to devise the performance confirmation program consistent with regulations, including how to document its methods or procedures (whether directly in a performance confirmation plan or indirectly by reference to another document). Any procedures referenced would be subject to either NRC staff review or inspections.

Accordingly, Section 4.4 of the draft Yucca Mountain Review Plan has been revised to delete the word procedures and to be less prescriptive regarding this subject.

8 Administrative and Programmatic Areas

8.1 Record-Keeping Requirements

Issue: What are the requirements for keeping records of the repository and its operations?

Comment. A commenter asked about the plan for keeping records over the 10,000-year life span of a repository at Yucca Mountain and requested that records on private shippers of waste to a repository should include ''* * * liability information, accident records, breached or leaking cask records, judgments, accusations, and penalty records.''

Response. There are a number of record keeping requirements which relate to the repository which address many of the items identified by the commenter. NRC regulations at 10 CFR part 63, subpart D, specify the requirements for maintaining records at a Yucca Mountain high-level waste repository, including those required by the conditions of the license or by rules, regulations, and orders of the Commission, pursuant to 10 CFR 63.71(b). Records of the receipt, handling, and disposition of radioactive waste at a geologic repository operations area must contain sufficient information to provide a history of the movement of the waste from the shipper through all phases of storage and disposal. The records must be placed in the archives and land-record systems of local, State, and Federal government agencies, and archives elsewhere in the world. The

records are to identify the location of the geologic repository operations area, including the underground facility, boreholes, shafts ramps, and the boundaries of the site, and the nature and hazards of the waste.

DOE must also meet the 10 CFR 63.72 requirement to maintain records of construction in a manner that ensures their usability for future generations. These construction records must include surveys; a description of materials encountered; geologic maps and cross sections; locations and amount of seepage; details of equipment, methods, progress, and sequence of work; construction problems; anomalous conditions encountered; instrument locations, readings, and analyses; location and description of structural support systems; location and description of dewatering systems; details, methods of emplacement, and locations of seals used; and facility design records.

DOE must also maintain the records required by 10 CFR part 72, ''Licensing Requirements for the Independent Storage of Spent Nuclear Fuel, High-Level Radioactive Waste, and Reactor-Related Greater than Class C Waste,'' Subpart D, Sections 72.72, 72.74, 72.76, and 72.78. These additional records include material balance, inventory, and records requirements for stored material; reports of accidental criticality or loss of special nuclear material; material status reports; and nuclear material transfer reports.

DOE would also have to comply with U.S. Department of Transportation requirements for shipment of high-level radioactive waste and with NRC regulations at 10 CFR part 71, ''Packaging and Transportation of Radioactive Material.''

No changes were made to the Yucca Mountain Review Plan in response to this comment.

8.2 Land Ownership and Use

Issue 1: Does the land that might be used for a high-level waste repository at Yucca Mountain belong to Native American Tribes?

Comment. A commenter asked whether, for the purpose of controlling access to a repository at Yucca Mountain, the government was sure that the land does not belong to Native American Tribes. Another commenter asked where the Yucca Mountain Review Plan addressed the requirements for DOE to prove ownership and title to the land. A third commenter contended that the Ruby Valley Treaty of 1863 is being violated because land around the Yucca Mountain site belongs to the Western Shoshone Nation.

Response. NRC regulations at 10 CFR 63.121 require that the geologic repository operations area must be located in and on lands that are either acquired lands under the jurisdiction and control of DOE, or lands permanently withdrawn and reserved for its use. The land must also be free from significant encumbrances such as mining rights, right-of-ways, or rights of entry. DOE must satisfy these regulations in order to be granted a license for a high-level waste repository at Yucca Mountain. In its review of the license application, NRC staff would determine whether DOE has provided information that demonstrates compliance with these requirements. This review is addressed in Section 4.5.8, ''Controls to Restrict Access and Regulate Land Uses,'' of the draft Yucca Mountain Review Plan (Review Method 1 and Acceptance Criterion 1). In addition, the Commission addressed tribal claims regarding Yucca Mountain in the Statement of Considerations for 10 CFR part 63 (66 FR 55766, November 2, 2001):

> The NRC is aware that the Western Shoshone National Council disputes the claim of the United States to have legal title to land that includes the Yucca Mountain site. However, there are Federal court decisions which have addressed these land claim issues and which are binding on both DOE and NRC. Section 63.121 requires that, before NRC licensing of a waste repository at the Yucca Mountain site, DOE must establish that the geologic repository operations area and the site are located in and on land that is either acquired land under the jurisdiction and control of DOE, or lands permanently withdrawn and reserved for DOE's use.

No changes have been made to the Yucca Mountain Review Plan as a result of this comment.

Issue 2: What uses may be made of a geologic repository operations area other than disposal of radioactive waste?

Comment. One commenter was concerned that there might be plans to use a geologic repository operations area for purposes other than disposal of radioactive wastes and stated that building a monitored retrievable storage facility at Yucca Mountain is specifically prohibited by the Nuclear Waste Policy Act.

Response. Section 4.5.9, ''Uses of Geologic Repository Operations Area for Purposes Other than Disposal of Radioactive Wastes,'' of the draft Yucca Mountain Review Plan would be used to evaluate compliance with the 10 CFR 63.21(c)(22)(vii) requirement that a license application must contain ''Plans for uses of the geologic repository operations area at the Yucca Mountain site for purposes other than disposal of radioactive wastes, with an analysis of the effects, if any, that such uses may have on the operation of the structures, systems, and components important to safety and the engineered and natural barriers important to waste isolation.''

The regulations require DOE to identify uses that are unrelated to waste disposal. Section 141 of the Nuclear Waste Policy Act prohibits the construction of a monitored retrievable storage facility at Yucca Mountain.

NRC staff will evaluate any such proposed uses if included in a license application for a high-level waste repository at Yucca Mountain, and determine whether such uses are contrary to the Nuclear Waste Policy Act.

No changes were made to the Yucca Mountain Review Plan as a result of this comment.

8.3 Expert Elicitation

Issue: What is the appropriate scope for the use of expert elicitation?

Comment. A commenter expressed concerns about the use of expert elicitation in a license application for a high-level radioactive waste repository at Yucca Mountain. The commenter stated that because DOE has had 20 years to obtain data to evaluate the suitability of the Yucca Mountain site, DOE use of expert elicitation should be limited and should not be a substitute for information obtainable during site characterization. The commenter also stated that NRC staff should not allow DOE to substitute expert opinion for data that it was afraid to collect.

Response. It is not acceptable to use expert elicitation as a substitute for information that could have been reasonably obtained during site characterization or to avoid collection of relevant data. The regulations at 10 CFR 63.21(c)(19) requires ''an explanation of how expert elicitation was used.''

Section 4.5.4, ''Expert Elicitation,'' of the draft Yucca Mountain Review Plan uses NUREG–1563, ''Branch Technical Position on the Use of Expert Elicitation in the High-Level Radioactive Waste Program'' (NRC, 1996). The NUREG–1563 states, in part:

> In matters important to the demonstration of compliance, the use of formal expert elicitation should be considered whenever one or more of the following conditions exist:
>
> (a) Empirical data are not reasonably obtainable, or the analyses are not practical to perform;
>
> (b) Uncertainties are large and significant to a demonstration of compliance;
>
> (c) More than one conceptual model can explain, and be consistent with, the available data; or

(d) Technical judgments are required to assess whether bounding assumptions or calculations are appropriately conservative.

NRC staff will apply this guidance in evaluating an application for the construction of a high-level waste repository at Yucca Mountain.

The Yucca Mountain Review Plan text has been modified to specifically state the cited items from NUREG–1563.

8.4 U.S. Department of Energy Organizational Structure

Issue: Should the Yucca Mountain Review Plan discussion of DOE responsibilities for project management be expanded?

Comment. One commenter noted that the license application should contain an evaluation of DOE's procedures for assuring that delegated activities are carried out in accordance with the license and with the Commission's regulations. The commenter noted that DOE would be responsible for safe repository operations, even if certain activities are delegated to a contractor. The commenter stated it is unclear regarding the procedures that DOE must use to manage the overall project, including the delegated activities.

Response. Draft Yucca Mountain Review Plan Section 4.5.3.1, ''DOE Organizational Structure as it Pertains to Construction and Operation of Geologic Repository Operations Area,'' provides guidance to NRC staff to determine whether DOE's procedures governing its project management responsibilities are adequate.

No changes were made to the Yucca Mountain Review Plan in response to this comment.

8.5 Water Rights

Issue: Does the Yucca Mountain Review Plan adequately evaluate whether DOE has obtained the necessary water rights for operation of a high-level waste repository at Yucca Mountain?

Comment. One commenter questioned whether DOE would need to have obtained water rights to accomplish the purposes of the geologic repository operations area. The commenter noted that the phrase ''water rights'' has specific meaning in Nevada and suggests that the Yucca Mountain Review Plan clarify whether DOE is required to have water rights as granted by the State of Nevada or to simply demonstrate that an adequate supply of water is available for the site.

Response. The provisions in Section 4.5.8 of the draft Yucca Mountain Review Plan are based on the requirements regarding water rights specified in 10 CFR 63.121. DOE must obtain ''such water rights as may be needed to accomplish the purpose of the geologic repository operations area.'' In addition, for permanent closure, DOE ''* * * shall exercise any jurisdiction and control over surface and subsurface estates necessary to prevent adverse human actions that could significantly reduce the geologic repository's ability to achieve isolation. The rights of DOE may take the form of appropriate possessory interests, servitudes, or withdrawals from location or patent under the general mining laws.''

No changes were made to the Yucca Mountain Review Plan as a result of this comment.

8.6 License Conditions

Issue: Should the list of proposed license conditions for a high-level waste repository at Yucca Mountain include mitigating actions from the environmental impact statement?

Comment. One commenter expressed concern that the list of areas for which NRC believes DOE should propose license conditions is unnecessarily limited and is not consistent with conditions contained in licenses for other nuclear facilities. The commenter cites, for example, the absence of a provision for adequate off-site emergency response and medical capabilities. The commenter suggested that the revised plan provide a much more comprehensive listing, for consideration of possible license conditions, which would include all measures to mitigate repository system impacts identified within the Yucca Mountain Final Environmental Impact Statement and impact reports prepared by others.

Response. Mitigating actions that might be required as a result of potential environmental impacts of a repository at Yucca Mountain must be addressed by DOE in the Yucca Mountain Final Environmental Impact Statement. The content of the Yucca Mountain Final Environmental Impact Statement is outside the scope of the safety review encompassed by the Yucca Mountain Review Plan. NRC staff will evaluate the Yucca Mountain Final Environmental Impact Statement in accordance with Commission regulations at 10 CFR part 51 and applicable regulations. If appropriate, mitigating actions may be identified as license conditions.

The list of areas for potential license conditions presented in the Yucca Mountain Review Plan guidance is not all-inclusive. Under 10 CFR 63.42, the Commission will impose any conditions, including license specifications, it considers necessary to protect public health and safety, the common defense and security and the environment. NRC staff has modified the section in the Yucca Mountain Review Plan to make reviewers aware that the listing is not intended to be complete. License conditions will be imposed on a high-level waste repository at Yucca Mountain determined based on a review of information presented in the license application, as well as the environmental impact statement, as needed to reach the reasonable assurance or reasonable expectation standard for the repository.

8.7 Quality Assurance

Issue 1: Are Yucca Mountain Review Plan quality assurance acceptance criteria consistent with 10 CFR part 63 requirements and relevant regulatory guidance?

Comment 1. A commenter stated that the draft Yucca Mountain Review Plan applies quality assurance acceptance criteria that seem to exceed or expand on 10 CFR part 63 requirements and relevant regulatory guidance, such as NRC-endorsed consensus standards, American Society of Mechanical Engineers Standard NQA–1, other nuclear facility review plans, and standard industry practice as implemented under 10 CFR parts 21, 50, 70, and 72. The commenter stated that the draft Yucca Mountain Review Plan, therefore, unnecessarily constrains the license applicant's ability to establish quality assurance program implementation methods by setting expectations for specific compliance or implementation methods that are rigid and differ significantly from those applicable to other nuclear facilities regulated by NRC.

Another commenter stated that the draft Yucca Mountain Review Plan quality assurance acceptance criteria are too restrictive, are inconsistent with other NRC criteria for quality assurance program descriptions, and would require continual application of the quality assurance program description change process.

The commenters specified a number of places in the Yucca Mountain Review Plan related to their concerns.

Response 1. The Yucca Mountain Review Plan quality assurance acceptance criteria are consistent with 10 CFR part 63, subpart G, requirements and relevant regulatory guidance. In preparing the Yucca Mountain Review Plan, NRC staff considered many sources of information including consensus standards, American Society of Mechanical Engineers Standard NQA–1, other nuclear facility standard review plans, and standard industry

practice. NRC staff tailored information from those sources to the unique requirements specifically applicable to a Yucca Mountain repository.

As stated in Section 4.5.1, ''Quality Assurance Program,'' of the draft Yucca Mountain Review Plan, DOE has flexibility in defining methods and controls while still satisfying pertinent regulations, and DOE may adopt exceptions and alternatives to the 18 acceptance criteria in the Yucca Mountain Review Plan, provided DOE can otherwise show it satisfies the requirements in 10 CFR part 63.

No changes have been made to the Yucca Mountain Review Plan as a result of this comment.

Comment 2. Two commenters questioned whether quality assurance acceptance Criteria 19–22, that address software, sample control, scientific investigation, and field surveys, respectively, are necessary and whether these areas are already adequately covered by quality assurance acceptance criteria 1–18.

Response 2. The Yucca Mountain Review Plan quality assurance acceptance criteria are consistent with the quality assurance criteria of 10 CFR part 50, appendix B, which apply to nuclear power plants and fuel reprocessing plants. Criteria 19–22 clarify certain quality assurance requirements in 10 CFR part 50, appendix B, for application to the Yucca Mountain repository. However, these four acceptance criteria did not expand the scope of applicability for quality assurance.

To maintain consistency between the structure in the Yucca Mountain Review Plan and quality assurance requirements in 10 CFR part 63, subpart G, NRC staff has consolidated specific acceptance criteria 19–22 into specific acceptance criteria 3, 8, and 10 as follows: Acceptance Criterion 19, ''Software,'' and Acceptance Criterion 21, ''Scientific Investigation,'' have been consolidated into Acceptance Criterion 3, ''Design Control''; Acceptance Criterion 20, ''Sample Control,'' has been consolidated into Acceptance Criterion 8, ''Identification and Control of Materials, Parts, and Components''; and Acceptance Criterion 22, ''Field Surveys,'' has been consolidated into Acceptance Criterion 10, ''Inspection.''

Issue 2: Are Yucca Mountain Review Plan quality assurance acceptance criteria and review methods more prescriptive than appropriate for a risk-informed, performance-based regulatory approach?

Comment. A commenter argued that many of the quality assurance acceptance criteria and review methods prescribe quality assurance program features more narrowly than is consistent with risk-informed, performance-based principles. The commenter stated that this approach limits the license applicant to a program that is not based on common nuclear industry practice and would place an unnecessary burden on the applicant to justify deviation from the specified approach. The commenter further stated that this approach would result in a description of implementation details in the quality assurance program description that may be more appropriate for inclusion in detailed implementing procedures.

The commenter identified a number of specific locations in the Yucca Mountain Review Plan that are related to these comments.

Response. The Yucca Mountain Review Plan quality assurance acceptance criteria are appropriate for a risk-informed, performed-based quality assurance program. The Yucca Mountain Review Plan quality assurance acceptance criteria provide guidance on issues associated with the uniqueness of the geologic repository. Exceptions from Yucca Mountain Review Plan approaches are acceptable, so long as the quality assurance requirements in 10 CFR part 63 are satisfied. Exceptions and alternatives to the acceptance criteria contained in the Yucca Mountain Review Plan may be adopted by DOE, provided DOE demonstrates that it can otherwise satisfy the requirements of part 63.

A quality assurance program description written in compliance with 10 CFR part 63, subpart G, is specifically tailored to the proposed high-level waste repository at Yucca Mountain and the Yucca Mountain Review Plan incorporates appropriate NRC quality assurance guidance. The Yucca Mountain Review Plan states that, where appropriate, the quality assurance program description may reference a commitment to comply with certain provisions of documents identified in Section 4.5.1.5 of the draft Yucca Mountain Review Plan and need not repeat the text of the document in the quality assurance program description.

No changes have been made to the Yucca Mountain Review Plan as a result of this comment.

Issue 3: Should certain text from quality assurance standards that is included in the Yucca Mountain Review Plan be replaced by references to the corresponding text in those standards?

Comment. A commenter stated that many of the more prescriptive acceptance criteria appear to be direct or modified excerpts from references that could be more simply identified as NRC-endorsed sources, allowing the license applicant to maintain flexibility in developing implementation methods, consistent with risk-informed, performance-based principles. The commenter argued that the Yucca Mountain Review Plan should only reference these sources as acceptable means to implement NRC's quality assurance regulations.

A number of specific locations in the Yucca Mountain Review Plan where these comments apply were identified.

Response. Several quality assurance standards referenced in the Yucca Mountain Review Plan were written for a 10 CFR part 50, appendix B-type quality assurance program. Although 10 CFR part 50, appendix B requirements are similar to 10 CFR part 63 quality assurance requirements, unique considerations associated with a geologic high-level waste repository that relies on both natural and engineered barriers pose major differences. Therefore, the Yucca Mountain Review Plan includes text from these quality assurance standards, modified as necessary, in order to provide clear guidance during a license application review. This approach provides guidance on, and background for, the quality assurance elements unique to the geologic repository in one document. Section 4.5.1, ''Quality Assurance Program'' of the draft Yucca Mountain Review Plan states, ''Where appropriate, the quality assurance program description may reference a commitment to comply with certain provisions of a document identified in Section 4.5.1.5 of the draft Yucca Mountain Review Plan and not repeat the text of the document in the quality assurance program.''

No changes were made to the Yucca Mountain Review Plan in response to this comment.

Issue 4: Should the Yucca Mountain Review Plan reference more recent quality assurance standards?

Comment. Three commenters recommended using a more recent edition of standard NQA–1 rather than NQA–1–1983 and revising the text of the Yucca Mountain Review Plan accordingly. Another commenter suggested incorporating Nuclear Safety Standards from July 2002.

Response. NRC endorses standards through the use of regulatory guides. These regulatory guides provide sufficient detail to ensure that programs and activities governed by such standards comply with the applicable regulations.

Licensees with 10 CFR part 50, appendix B, quality assurance programs have committed to using quality assurance standard NQA–1–1983, the latest edition endorsed by NRC in Regulatory Guide 1.28 or committed to the ANSI 45.2 series standards. More recent editions of NQA–1 do not contain sufficient detail to describe how the applicable NRC quality assurance requirements would be satisfied. For example, in NQA–1–1997, many detailed provisions have either been removed from the standard or relocated to a non-mandatory appendix.

However, Section 4.5.1, ''Quality Assurance Program,'' of the draft Yucca Mountain Review Plan provides that ''Exceptions and alternatives to these acceptance criteria and the documents and positions contained in Section 4.5.1.5 of the draft Yucca Mountain Review Plan may be adopted by DOE, provided the applicant can otherwise demonstrate compliance with quality assurance program requirements in 10 CFR part 63.'' Therefore, DOE may propose alternatives to the Yucca Mountain Review Plan quality assurance acceptance criteria, provided adequate justification is submitted to demonstrate that the proposed alternatives adequately describe how the quality assurance requirements of 10 CFR Part 63 will be satisfied.

No changes have been made to the Yucca Mountain Review Plan in response to this comment.

Issue 5: Which nonmandatory requirements of NQA–1–1983 must be followed?

Comment. A commenter stated that the Yucca Mountain Review Plan is not clear on the use of the ''non-mandatory guidance'' in NQA–1–1983.

Response. Guidance on the use of nonmandatory requirements in NQA–1–1983 is sufficiently clear in the Yucca Mountain Review Plan. Commitment to NQA–1–1983 requirements is subject to exceptions, clarifications, or modifications provided in the Yucca Mountain Review Plan quality assurance acceptance criteria or Paragraph C of ''Regulatory Position,'' of Regulatory Guide 1.28. Any nonmandatory requirements identified in NQA–1–1983 that are not addressed in either the Yucca Mountain Review Plan quality assurance acceptance criteria or Paragraph C of Regulatory Guide 1.28 need not be followed.

No changes have been made to the Yucca Mountain Review Plan in response to this comment.

Issue 6: Which elements of the quality assurance program should be in place at the time of license application submittal?

Comment. A commenter recommended that the Yucca Mountain Review Plan clearly state which elements of DOE's quality assurance program should be in place at the time of license application submittal. The commenter stated an expectation that, as for nuclear power reactor licensing activities, the quality assurance program description would be submitted to NRC separately from the Safety Analysis Report, well before the quality assurance program is fully implemented. Field procedures would be in place, with follow-on commitments to ensure that planned programmatic activities are implemented.

Response. The time frame for implementation of the quality assurance program is sufficiently clear in the Yucca Mountain Review Plan. Section 4.5.1.3, ''Acceptance Criteria,'' states that ''The DOE quality assurance program and associated quality assurance program controls and implementing procedures regarding activities performed must be in place before activities begin.'' These activities include site characterization; acquisition, control, and analysis of samples and data; tests and experiments; scientific studies; facility and equipment design and construction; and performance confirmation.

Section 4.5.1.3 of the draft Yucca Mountain Review Plan has been modified to identify these activities.

Issue 7: Should the step-wise licensing approach be applied to the review of the quality assurance program description?

Comment. A commenter recommended that the step-wise licensing approach be applied to the content and level of detail of the quality assurance program description required for the different phases of repository licensing. Another commenter stated that, typically, a quality assurance program description that encompasses all phases of repository construction, operation, and closure, as required by the Yucca Mountain Review Plan quality assurance acceptance criteria, is prepared in stages (*i.e.*, there are specific elements of the quality assurance program description required to be submitted and reviewed for the design and construction phase/activities, whereas others are required to be submitted and reviewed for the operations phase). This commenter also stated that, although some of the elements of the quality assurance program descriptions are similar among licensing steps, there are different policies, organizations, programs, and procedures that will be implemented for each step.

Response. A step-wise licensing approach should be applied to the review of the quality assurance program description. Section 4.5.1.3 of the Yucca Mountain Review Plan has been modified to state the following:

> The U.S. Department of Energy shall establish a quality assurance program to include all activities up to the time of receipt of high-level radioactive waste for disposal in the geologic repository. These activities include site characterization; acquisition, control, and analysis of samples and data; tests and experiments; scientific studies; facility and equipment design and construction; and performance confirmation. The Yucca Mountain Review Plan will be modified, at the appropriate time, to include facility operation, permanent closure, and decontamination and dismantling of surface facilities. The U.S. Nuclear Regulatory Commission staff should assure that the scope of the Yucca Mountain Review Plan includes those activities described in the U.S. Department of Energy quality assurance program under review. Appropriate conditions should be imposed on quality assurance program and Yucca Mountain Project approvals that reflect the scope of activities described in the quality assurance programs and applications submitted for U.S. Nuclear Regulatory Commission review and approval by the U.S. Department of Energy.

Issue 8: Why are quality assurance program references (Section 4.5.1.5) divided into two groups?

Comment. A commenter stated that the rationale is not clear for division of quality assurance references'' between ''commitments'' and ''noncommitments.''

Response. Identifying the scope of potentially applicable information will facilitate a licensing review and preparation of a more complete license application. The ''commitments'' listing of references is mandatory. Commitments are required to be addressed by DOE. The ''noncommitments'' are not mandatory, but guidance documents that may be used by both DOE and NRC staff reviewers as a source of additional guidance. If noncommitment documents are identified in the license application, NRC staff can refer to these same documents during the review process.

No changes were made to the Yucca Mountain Review Plan in response to this comment.

Issue 9: Is it necessary to have both general and specific acceptance criteria for the review of the quality assurance program description?

Comment. A commenter argued that because there are no ''general'' quality assurance requirements identified in the applicable NRC regulations, it is inappropriate to have ''general'' quality

assurance acceptance criteria, in addition to ''specific'' quality assurance acceptance criteria, in the Yucca Mountain Review Plan. The commenter requested clarification as to the difference between the general and specific acceptance criteria and provided specific recommendations for revisions.

Response. The general acceptance criteria in Section 4.5.1.3 of the draft Yucca Mountain Review Plan provide NRC staff with a broad view of the overall quality assurance requirements and the specific criteria provide the details of the individualized quality assurance requirements. Reiteration of the requirements is useful to promote consistency in NRC staff review.

No changes were made to the Yucca Mountain Review Plan in response to this comment.

Issue 10: Is the Yucca Mountain Review Plan guidance for review of the quality assurance program description appropriate for performance assessment?

Comment. A commenter recommended revisions to reflect a quality assurance program geared to performance assessment, rather than only experimental activities and calculations.

Response. A preclosure safety analysis and a postclosure performance assessment regulatory requirements are important components in evaluating the Yucca Mountain project. The quality assurance terminology is appropriate and adequate for performance assessment because it has been proven effective in a wide range of applications.

No changes were made to the Yucca Mountain Review Plan in response to this comment.

Issue 11: How much overlap is appropriate between acceptance criteria in Section 4.5.1, ''Quality Assurance Program,'' and Section 4.2.1.3, ''Model Abstraction''?

Comment. A commenter stated that the data and model criteria in Acceptance Criterion 21 of Section 4.5.1.3, ''Acceptance Criteria'' appear to be redundant or inconsistent with the technical requirements in Section 4.2.1.3, ''Model Abstraction.''

Response. In response to other comments, Acceptance Criterion 21, ''Scientific Investigation,'' has been consolidated into Acceptance Criterion 3, ''Design Control.'' This change has not changed the scope of the quality assurance requirements.

Issue 12: How should quality assurance software requirements be applied?

Comment. Two commenters requested clarification as to which types of software were subject to quality assurance software requirements. One commenter argued that quality assurance software requirements should apply only to software developed to support a safety or waste isolation function.

Response. Section 4.5.1, ''Quality Assurance Program,'' of the Yucca Mountain Review Plan has been modified to specify that it applies to software developed to support functions important to safety or to waste isolation.

Issue 13: Should the discussion of the corrective action program be clarified?

Comment. Two commenters recommended that the discussion of the corrective action program be clarified with respect to terminology, procedures, and the role of quality assurance staff in the program.

Response. The discussion of the corrective action program in Section 2.5.13 of the draft Yucca Mountain Review Plan is appropriate as written because it is consistent with widely accepted and proven approaches to corrective action in quality assurance programs.

No changes have been made to the Yucca Mountain Review Plan in response to this comment.

Issue 14: Is the review of quality control and certification for nuclear waste transportation canisters and casks and their fabrication included in the review of the quality assurance program description?

Comment. A commenter asked whether NRC will review the quality control for the manufacturing processes used to produce nuclear waste transportation canisters and casks. The commenter also asked whether NRC will specify conditions or criteria for certification of canisters and whether manufacturing processes, construction, and quality control issues are periodically reviewed by NRC to ensure adherence to approved certification criteria and that canisters are constructed to required specifications.

Response. Under 10 CFR part 71, NRC is responsible for certifying the designs of shipping casks that may be used to move commercial nuclear waste by truck or rail to Yucca Mountain. NRC will also review the manufacturing processes used to produce transportation canisters and will periodically inspect the manufacturing processes and construction to ensure that design criteria are adhered to and that transportation canisters are constructed to applicable specifications.

No changes were made to the Yucca Mountain Review Plan in response to this comment.

Issue 15: What is the scope of license applicant qualification information that should be covered in the review of the quality assurance program description?

Comment. A commenter recommended that NRC provide for a thorough review of the background, experience, management capability, and track record of the license applicant in the Yucca Mountain Review Plan.

Response. DOE, in accordance with 10 CFR 63.21(c)(22), is required to include information about its organizational structure as it pertains to construction and operation of the repository, and the personnel qualifications and training requirements. NRC has a program in place to observe detailed technical and programmatic audits of DOE's Yucca Mountain project and its contractors. Various aspects of DOE's quality assurance program, specifically with regard to the Yucca Mountain project, are routinely evaluated by NRC. However, only the license applicant activities specifically related to a Yucca Mountain repository fall under the scope of the regulatory requirements in 10 CFR part 63.

No changes were made to the Yucca Mountain Review Plan in response to this comment.

Issue 16: Should the text be revised to address various consistency, clarification, editorial, and format issues?

Comment. A commenter provided several comments on various consistency, clarification, editorial, format, and other miscellaneous issues.

Response. Section 4.5.1, ''Quality Assurance Program'' of the draft Yucca Mountain Review Plan has been modified, as appropriate, to incorporate various editorial changes for consistency, clarification, and format issues related to this comment.

9 Structure of the Yucca Mountain Review Plan

9.1 Level of Detail

Issue: Is the level of detail in the Yucca Mountain Review Plan appropriate to guide the review of a license application?

Comment. Commenters noted that the degree of specification in review methods varies substantially throughout the Yucca Mountain Review Plan. In some sections, presumptions are made as to what is important to safety or waste isolation by including discussion of specific design solutions (*e.g.*, backfill). The commenters consider these assumptions to be inconsistent with the risk-informed, performance-based regulations at 10 CFR part 63. The

commenters suggested that the Yucca Mountain Review Plan be revised to clarify that the applicant will specify structures, systems, and components important to safety and natural and engineered barriers important to waste isolation, compatible with the risk-informed, performance-based regulations. The commenters noted that since these presumptions occur throughout the document, a general discussion in the Yucca Mountain Review Plan ''Introduction'' could address the issue.

One commenter stated that the general description of the geologic repository must include detailed descriptions of surface and interim storage facilities. The commenter also stated that the general information review should focus on natural threats to repository integrity and identified a number of such specific potential threats. Another commenter requested more detailed information on the status of activities to meet requirements for ownership and control of interests in land and on the schedule for meeting these requirements.

Another commenter stated that the general information section of the Yucca Mountain Review Plan indicates that information be presented at the level of an ''executive summary,'' but the actual level of detail requested is more appropriate for discussion in the safety analysis report rather than in an executive summary.

Response. DOE has the responsibility to specify structures, systems, and components that are important to safety and multiple barriers both natural and engineered important to waste isolation. This responsibility is noted in several places in the Yucca Mountain Review Plan. The Yucca Mountain Review Plan makes no presumptions regarding these structures, systems, components, or barriers, and mentions specific design features only as examples or to restate language in NRC's regulations.

The general information submitted with a license application, as required by 10 CFR 63.21(b)(1) and (2), need not contain detailed descriptions of surface and interim storage facilities and other features, events, and processes that might exist or occur at a repository for high-level radioactive waste at Yucca Mountain, or of the status of compliance with specific regulatory requirements. The general information portion of a license application includes a description of the proposed repository at Yucca Mountain, including an identification of the location of the repository operations area, the general character of proposed activities, proposed schedules for construction, receipt and emplacement of waste. This information should be at a level of detail to provide the reviewer enough background information to provide a context for detailed reviews of information using, for example, Chapter 4, ''Review Plan for Safety Analysis Report,'' of the draft Yucca Mountain Review Plan. Reviews conducted using Chapter 4 of the plan will require detailed descriptions of surface and interim storage facilities proposed in the facility design as well as evaluations of the features, events, and processes that might occur at a repository. It is not necessary that such information be duplicated in the ''General Information'' section of the Yucca Mountain Review Plan.

In the general information section of the Yucca Mountain Review Plan, material should be addressed at the level of a summary and should not duplicate the detailed information required to be stated in the safety analysis report.

The Yucca Mountain Review Plan has been modified to clarify the purpose of the general information section is to request descriptive information (except with respect to the detailed security plan measures that are required by 10 CFR part 63), and to reflect in the Introduction section (now Appendix A) that NRC staff has made no presumptions regarding which items contribute to performance.

9.2 Information and Level of Detail Required for Each Licensing Step

Issue: Should the Yucca Mountain Review Plan more clearly acknowledge the step-wise licensing process and define the level of detail that would be applicable for each licensing step for a repository at Yucca Mountain.

Comment. Commenters stated that regulations in 10 CFR part 63 confirm that repository licensing will occur in steps and that the level of detail required to proceed with each licensing step will increase as more information is obtained. According to one commenter, in developing this step-wise approach to repository licensing, NRC drew on decades of experience in licensing nuclear reactors in discrete steps under regulations at 10 CFR part 50.

The commenters argued that the Yucca Mountain Review Plan should clearly acknowledge that a step-wise licensing approach is applicable to a repository and that the license application should include not only a description of the robustness of the system and an assessment of performance, but also an acknowledgment that additional information will continue to be developed.

The commenters stated that the draft Yucca Mountain Review Plan does not clearly and consistently differentiate the information needed for the different steps of licensing. Accordingly, the plan does not differentiate how the areas of review, review methods, and acceptance criteria should vary for each of the licensing steps.

One commenter stated that, although DOE is expected to develop a sufficiently robust and well-documented license application that would permit NRC to independently determine the safety of a repository, DOE is not expected to have resolved all design and long-term repository performance issues at the construction authorization step. However, one commenter expressed a concern that the draft Yucca Mountain Review Plan inappropriately allows the DOE to simply commit to complying with certain regulatory requirements rather than to demonstrate actual compliance.

The commenter identified locations in the draft Yucca Mountain Review Plan that are related to these comments.

Response. The regulations at 10 CFR 63.21(a) require that ''[T]he application must be as complete as possible in the light of information that is reasonably available at the time of docketing.'' The Commission addressed the step-wise licensing approach in its ''Statement of Considerations'' for 10 CFR part 63 (66 FR 55738–55739, November 2, 2001) in which it stated:

> Part 63 provides for a multi-staged licensing process that affords the Commission the flexibility to make decisions in a logical time sequence that accounts for DOE collecting and analyzing additional information over the construction and operational phases of the repository. The multi-staged approach comprises four major decisions by the Commission: (1) Construction authorization; (2) license to receive and emplace waste; (3) license amendment for permanent closure; and (4) termination of license. The time required to complete the stages of this process (*e.g.*, 50 years for operations and 50 years for monitoring) is extensive and will allow for generation of additional information. Clearly, the knowledge available at the time of construction authorization will be less than at the subsequent stages. However, at each stage, [the] DOE must provide sufficient information to support that stage. DOE has stated its intent to submit, and NRC expects to receive, a reasonably complete application at the time of construction authorization to allow the Commission to make a construction authorization decision. This is reflected in the requirement at Section 63.24(a) that the application be as complete as possible in light of information that is reasonably available at the time of docketing. The

Commission believes the regulations, as proposed, provide the necessary flexibility for making licensing decisions consistent with the amount and level of detail of information appropriate to each licensing stage. However, we agree with DOE that the proposed requirement at Section 63.24(a) speaks to the content of the initial application, as well as to all subsequent updates, and, therefore, it has been included at the end of Section 63.21(a).

The information provided at each stage should be sufficient for NRC staff to make the requisite findings for the licensing action being contemplated, whether, for example, it be issuance of a construction authorization or a license to receive and possess waste.

The Yucca Mountain Review Plan has been revised, as appropriate, to clarify the step-wise approach to licensing a geologic repository for high-level waste at Yucca Mountain and the information required for each licensing step.

9.3 Organization of the Yucca Mountain Review Plan

Issue 1: Should the Yucca Mountain Review Plan be reorganized to better support both preparation of an application and a licensing review?

Comment. Commenters noted that having a license application correspond to the structure of the Yucca Mountain Review Plan is important for NRC staff's review. Similarly, since the DOE will have to prepare and maintain a safety analysis report throughout the lifetime of a repository, a structure that most efficiently presents the required information is also important. The commenters suggested that a Yucca Mountain Review Plan more similar in structure to a reactor license application would facilitate license preparation by DOE, review of the application by NRC, and maintenance of the safety evaluation report over the lifetime of the facility. The commenters also suggested that restructuring of some areas of the Yucca Mountain Review Plan, such as the performance confirmation section, would enhance the transparency and traceability to DOE's supporting technical information. Specific recommendations to achieve this restructuring were provided for the preclosure safety; postclosure safety; and general information sections of the plan. The commenters also suggested that NRC state in the Yucca Mountain Review Plan that DOE may use a format different from that presented in the Yucca Mountain Review Plan.

With respect to the preclosure safety section of the Yucca Mountain Review Plan, one commenter suggested that a logical format would be to present design information followed by the preclosure safety analysis. This format would allow design information relevant to each structure, system, and component to be presented in its own subsection, rather than being split into separate areas as in the Yucca Mountain Review Plan. The commenter noted that as low as is reasonably achievable requirements are typically addressed as a design requirement for normal operations rather than as a consequence of hazards. Therefore, the commenter recommended that the as low as is reasonably achievable requirements be addressed in a new subsection of the Yucca Mountain Review Plan that provides a comprehensive review of the radiation protection program proposed for the facility. This new section would cover the as low as is reasonably achievable design aspects as well as the commitment to these principles during operations.

With respect to the postclosure safety section of the draft Yucca Mountain Review Plan, commenters noted that the draft Yucca Mountain Review Plan structure differs from that used previously by DOE and could make it difficult to present a cohesive story regarding total system performance while demonstrating compliance with the five acceptance criteria for each model abstraction. The commenter recommended that the Yucca Mountain Review Plan be rewritten to generally state that the five review methods (and corresponding acceptance criteria) are to be applied to the model abstractions as DOE determines. The commenter notes that, in previous documents, DOE communicated its postclosure safety approach in terms of the movement of water from the surface through the mountain to the accessible environment, which is different from the structure currently presented in the Yucca Mountain Review Plan.

Commenters identified locations in the draft Yucca Mountain Review Plan relevant to their concerns.

Response. The Yucca Mountain Review Plan should provide a structure for the license application as a means to promote efficiency in both preparation of an application by DOE and the license application review by NRC staff. Long-term maintenance of the safety analysis report might also be enhanced. The structure of the Yucca Mountain Review Plan was intended to provide this structure and to inform the prospective applicant as to the preferred organizational structure of the license application.

Organization of the application along the lines of a power reactor application may not be appropriate for a potential repository for high-level waste. Among the considerations that defined the structure of the Yucca Mountain Review Plan are: (i) The requirements for the content of a license application at 10 CFR 63.21; (ii) the need to focus a licensing review on compliance with risk-informed, performance-based performance objectives being implemented in 10 CFR part 63; and (iii) the specification, in 10 CFR part 63, of techniques to be used to demonstrate compliance both during operations and after permanent closure.

Because regulatory guidance cannot impose regulatory requirements, DOE is not required to use the format presented in the Yucca Mountain Review Plan, however, a different format could prolong the duration of the NRC licensing review.

As for the suggestion that the preclosure safety section (Section 4.1 of the draft Yucca Mountain Review Plan) first present design information followed by the preclosure safety analysis, the approach currently in the plan is consistent with the steps required for a preclosure safety analysis. These techniques are based on hazard and consequence analysis methodologies that are widely accepted for complex facilities. The purpose of the preclosure safety analysis is to determine whether the preclosure performance objectives will be met. Consequently, the review steps in the Yucca Mountain Review Plan logically lead from hazard identification through consequence analyses to assessment of compliance with performance objectives. Related to this approach is the need to use risk information to focus the NRC staff review. The preclosure safety analysis will be used by DOE to identify those structures, systems, and components important to safety. Since these structures, systems, and components have not yet been identified, the Yucca Mountain Review Plan is not structured around the design of the repository.

As low as is reasonably achievable requirements are typically addressed as a design requirement for normal operations rather than as a consequence of hazards. However, for a preclosure safety analysis for a repository meeting these requirements can appropriately be linked to the radiological risks of a repository. Since these risks will be evaluated as part of the preclosure safety analysis process, NRC staff prefers to evaluate them as part of its review of DOE's preclosure safety analysis.

Comments on the postclosure safety section of the Yucca Mountain Review Plan may have misinterpreted the review approach. NRC staff is aware that

the current DOE Total System Performance Assessment uses nine process level models (similar to NRC's model abstractions) that are based on the flow of water through a repository to the location of the reasonably maximally exposed individual. In light of the key role performance assessment will play in demonstrating and determining compliance, NRC staff has been developing an independent performance assessment capability for a Yucca Mountain repository and discussed the published results with DOE at numerous public meetings. The NRC total system performance assessment incorporates 14 model abstractions that represent its independent conceptual model of a Yucca Mountain site. The Yucca Mountain Review Plan describes how NRC staff will determine compliance, and its independently developed total system performance assessment code will be an important tool in assessing whether DOE has satisfied regulatory requirements. Therefore, the Yucca Mountain Review Plan facilitates the use of this tool in the license application review. DOE's compliance demonstration method may use similar, or different, conceptual models. NRC staff review, based on its 14 model abstractions, is described in detail in the Yucca Mountain Review Plan. This detail is useful because NRC staff has learned a great deal about the features, events, and processes of the Yucca Mountain site, and this knowledge is reflected in the technical information specific to each of the 14 model abstractions.

Although specific details of the postclosure portion of the Yucca Mountain Review Plan have been revised to address this comment, the general structure has not been changed. The Yucca Mountain Review Plan was revised, as appropriate, to clarify the matters raised in these comments.

Issue 2: Should quality assurance requirements be specifically addressed in each section of the Yucca Mountain Review Plan?

Comment. One commenter stated that quality assurance requirements should be identified and specified in the review methods and acceptance criteria for each section of the Yucca Mountain Review Plan. The commenter argued that Section 3.2, ''Proposed Schedules for Construction, Receipt, and Emplacement of Waste,'' Review Method 1, and Acceptance Criterion 1, of the draft Yucca Mountain Review Plan, should explicitly mention quality assurance compliance, since state-of-the-art quality assurance begins with preliminary scheduling and includes impacts on schedules, work interdependence, and work flow, particularly during construction. The commenter also suggested four specific changes to this section of the Yucca Mountain Review Plan that would incorporate quality assurance requirements.

Response. The quality assurance requirements in 10 CFR part 63 apply to aspects of repository construction, operation, or closure that are important to safety or to waste isolation. While quality assurance is an integral part of almost all aspects of a licensing review for a high-level waste repository, the Yucca Mountain Review Plan includes a single section on quality assurance, which will be applied to each of the other review activities.

To clarify the importance of quality assurance, the Yucca Mountain Review Plan integrates quality assurance into the entire licensing review by using the review methods and acceptance criteria in the ''Quality Assurance Program'' section of the Yucca Mountain Review Plan and applying them to reviews conducted for other Yucca Mountain Review Plan sections.

No changes to the Yucca Mountain Review Plan were made as a result of this comment.

Issue 3: Should the distinction between a licensing review and inspection activities be specifically addressed in each section of the Yucca Mountain Review Plan?

Comment. One commenter stated that the distinction between licensing review and inspection activities should be highlighted in each section of the Yucca Mountain Review Plan.

Another commenter suggested that NRC staff conduct a comprehensive review of the plan to ensure that the level of detail being specified is appropriate for a licensing review, rather than an inspection review. The commenter also suggested that Figure 1.1 in the plan be clarified for this purpose and that the ''Introduction'' to the Yucca Mountain Review Plan be revised to more explicitly outline this principle.

Response. It is not necessary to draw a distinction between licensing review and inspection in each section of the Yucca Mountain Review Plan in that it would substantially lengthen the review plan without adding significant benefit or clarity to the licensing review. This approach would also be inconsistent with other agency review plans.

As part of NRC's inspection program for a high-level waste repository at Yucca Mountain, NRC staff would prepare an Inspection Manual inspection procedures and would train additional inspectors. Inspection would thus be addressed separately.

No changes have been made to the Yucca Mountain Review Plan as a result of this comment.

Issue 4: Is the Yucca Mountain Review Plan excessively redundant and difficult to understand?

Comment. One commenter stated that although the Yucca Mountain Review Plan meets the purpose for which it was written and explains the bases for activities and roles of various entities, it is repetitive particularly with respect to ''Areas of Review,'' ''Review Methods,'' ''Acceptance Criteria,'' ''Evaluation Findings,'' and ''References.'' The commenter noted that such headings, along with common verbiage, is repeated for topics, which are separately discussed for both preclosure and postclosure safety reviews. Although the commenter indicated that this approach may support the uniformity of the NRC review, it makes the document quite long. The commenter suggested that a table could be used as an abbreviated form of what currently appears as narrative under the headings (*e.g.*, ''Acceptance Criteria,'' ''Evaluation Findings,'' *etc.*) for each of the topics involved and for each major section of the review plan.

Response. The Yucca Mountain Review Plan is lengthy and somewhat redundant. The structure and format of the review plan, however, is intended to guide NRC staff reviewers from various disciplines to perform an efficient and complete review in discrete areas and provide the relevant information in each section. The structure of the Yucca Mountain Review Plan is also consistent with other NRC review plans.

No changes were made to the Yucca Mountain Review Plan in response to this comment.

Issue 5: Should the Yucca Mountain Review Plan include an example of how a review would be completed and the results documented?

Comment. One commenter noted that the Yucca Mountain Review Plan sections dealing with postclosure issues reflect the risk perspectives of 10 CFR part 63 appropriately, but cautioned that implementation of the Yucca Mountain Review Plan will determine whether a risk perspective is followed. The commenter noted that the review plan identifies the need to maintain flexibility in review guidelines at the expense of specificity and acceptance criteria contain guidance to NRC staff for evaluating such aspects as: (1) Whether sufficient data are available to adequately define relevant parameters and conceptual models; (2) whether models use parameter values, assumed

ranges, probability distributions, and bounding assumptions that are technically defensible; and (3) whether the technical bases for the parameter values are consistent with data from the Yucca Mountain region. The commenter argued that the critical issue will be how items such as data sufficiency and model adequacy are determined and suggested adding an appendix to the Yucca Mountain Review Plan, which provides an abbreviated illustration of a review of a specific issue. This might be achieved using one of the integrated subissues, with specific reference to the prelicensing agreements between NRC staff and DOE staff as to how questions about sufficiency and adequacy would be addressed in the review process. The commenter noted that such an example might be very useful. In providing such an example, NRC staff could clarify what might lead to a conclusion that the license application was inadequate.

Response. An example of a review and the documentation of the results would be helpful to users of the Yucca Mountain Review Plan. One has been incorporated in Appendix A.

Issue 6: Will the Yucca Mountain Review Plan be revised in the future?

Comment. One commenter acknowledged that the Yucca Mountain Review Plan is a living document and agreed that physical protection is a potential area of change. The commenter questioned whether, considering the expected length of time between initial emplacement of waste and repository closure, it is reasonable to anticipate and accommodate change.

Response. Because the document is intended to address several steps in licensing of a high-level waste repository, the Yucca Mountain Review Plan will be revised in the future, if appropriate.

No changes to the Yucca Mountain Review Plan were made as a result of this comment.

9.4 Content of Yucca Mountain Review Plan Glossary

Issue: Should the Yucca Mountain Review Plan glossary include terms that are not defined in the text?

Comment. One commenter identified approximately forty terms that are used in the Yucca Mountain Review Plan text, but are not defined. The commenter suggested that these terms be added to the glossary.

Response. The glossary should define the terms used in the Yucca Mountain Review Plan. The glossary, however, provides general definitions and is not intended to be exhaustive as to all technical terms that may be used by a reviewer of a license application.

In response to this comment, the glossary has been revised to add terms that would be useful to a general reader.

9.5 Use of a Risk-Informed, Performance-Based Yucca Mountain Review Plan

Issue 1: Is the Yucca Mountain Review Plan sufficiently risk-informed, and performance-based?

Comment. One commenter noted the NRC commitment to conduct a risk-informed, performance-based licensing review for a potential high-level waste repository at Yucca Mountain. However, the commenter stated that the application of risk-informed, performance-based principles in the Yucca Mountain Review Plan was uneven. The commenter cited examples from the ''Introduction'' (now Appendix A) to the Yucca Mountain Review Plan that indicated risk-informed, performance-based principles were applied only where there was some reason to do so. The commenter argued that application of such principles should be a fundamental part of all NRC review activities. The commenter cited several specific examples from the Introduction to make the point that risk-informed, performance-based principles were unevenly applied in the Yucca Mountain Review Plan.

In addition, the commenter defined three items needed to consistently apply risk-informed, performance-based principles in the Yucca Mountain Review Plan: (i) Recognition that DOE has the latitude to make risk-informed, performance-based judgments as to what should be included in a license application and that NRC will determine whether it agrees with these judgments; (ii) revision of sections of the Yucca Mountain Review Plan that contain an excessive level of detail, particularly those sections dealing with repository design and Commission assumptions about the relative importance of specific features, events, and processes; and (iii) recognition that risk-informed, performance-based principles are especially important in a step-wise licensing process.

In support of these arguments, that commenter stated that consistent application of risk-informed, performance-based licensing principles would allow flexibility and would encourage the learning and development that would occur over a repository lifetime, thereby improving the protection of health and safety.

Finally, the commenter identified specific locations in the draft Yucca Mountain Review Plan that are inconsistent with risk-informed, performance-based principles; contain an excessive level of detail or prescription; or preclude necessary licensee flexibility. These locations are summarized here.

(1) Section 3, ''Review Plan for General Information,'' is, in general, overly detailed and prescriptive.

(2) Section 3 does not adequately recognize that, at the construction authorization stage, information in some areas may not be as highly developed as in others.

(3) Section 4.2.1.3, ''Model Abstraction,'' could be significantly streamlined. Rather than redundantly repeating the five generic Acceptance Criteria and related guidance, this material could be stated once and then applied to each of the 14 model abstractions. (This comment was made by another commenter on the review plan as well). The commenter stated that making this change would require a rewrite of the entire section, resulting in approximately 10 pages, rather than 109 pages, which could be applied with improved consistency and flexibility.

(4) Section 4.4, ''Performance Confirmation Program,'' is inconsistent with the risk-informed, performance-based nature of 10 CFR Part 63, would be impractical to implement, and contradicts what has been learned about total system performance assessment and subsystem performance requirements by placing detailed stipulations on the specific scientific and technical measures that must be taken to meet the already stated expectations of the ''Performance Confirmation Program.'' (Responses to comments received on Section 4.4 of the draft Yucca Mountain Review Plan are consolidated in Section 7 of this comment response document).

(5) Section 4.5.1, ''Quality Assurance,'' is too restrictive, inconsistent with other NRC criteria for Quality Assurance Program Descriptions, and will necessitate continual implementation of the Quality Assurance Program Description change process. (Responses to comments received on Section 4.5.1 of the draft Yucca Mountain Review Plan are consolidated in Section 8 of this comment response document.)

One commenter suggested that ''risk-informed,'' and ''performance-based'' be specifically defined in the Yucca Mountain Review Plan.

Response. Changes have been made throughout the Yucca Mountain Review Plan to address these and other comments. For example, the review plan explains that DOE may make risk-informed, performance-based judgments as to what should be included in a license application, and NRC has to

assess these judgments. NRC staff has revised sections of the Yucca Mountain Review Plan that contain an excessive level of detail, particularly those sections dealing with repository design and NRC assumptions about the relative importance of specific features, events, and processes. The Yucca Mountain Review Plan recognizes that risk-informed, performance-based principles are especially important in a step-wise licensing process.

Some specific comments, however, were not incorporated.

Regulations at 10 CFR part 63 were specifically written to implement a risk-informed, performance-based approach to licensing. Quantitative performance measures for the repository are found in the radiation health and protection standards that are implemented in 10 CFR part 63. In addition, 10 CFR part 63 specifies use of multiple barriers, performance confirmation, and other requirements in demonstrating performance. There are some techniques, programs, and guidance for regulating the use of radioactive material, however, that have proven to be efficient and effective for a wide range of licensees and that were adopted in 10 CFR part 63. Among these areas are operational health physics, material control and accountability, and emergency preparedness. For these reasons, the Yucca Mountain Review Plan does not reflect major changes in the way these programs would be implemented at other facilities regulated by NRC.

An applicant may propose approaches to areas such as operational health physics, physical protection, material control and accountability, and emergency preparedness that depart from those outlined in the guidance of the Yucca Mountain Review Plan. If DOE otherwise demonstrates it satisfies regulatory requirements, that is, that the public health and safety, as well as the environment, would be protected, NRC staff would find those approaches acceptable.

Section 4.2.1.3, ''Model Abstraction,'' of the draft Yucca Mountain Review Plan is lengthy and somewhat redundant, but was structured to best reflect how NRC staff would conduct its licensing review. Each of the 14 model abstractions has its unique technical and regulatory issues. Although the five generic acceptance criteria are applicable to each of the model abstraction reviews, for the convenience of the reviewer, the review procedures and acceptance criteria are listed separately for each model abstraction. Accordingly, the multidisciplinary team that conducts each model abstraction review will be able to use a separate section of the review plan.

In summary, changes have been made throughout the Yucca Mountain Review Plan to more effectively implement a risk-informed, performance-based licensing review, but brevity has not been the primary goal.

Issue 2: To what extent should NRC staff rely on the applicant in developing risk insights?

Comment. One commenter noted that findings of compliance or noncompliance will need to be substantiated, suggesting that NRC staff performs a detailed review or a simplified review of a particular feature will be decided by how important DOE's safety analysis considers the feature to be to the overall repository performance. On the other hand, the Yucca Mountain Review Plan contains language that suggests that the scope of the review will be determined in part by what DOE deems important, but also in part by risk insights developed by NRC staff from using its own knowledge of the site and its own analyses of performance assessment models. The commenter strongly favored the latter approach.

The commenter urged NRC staff not to be guided solely by the applicant on the depth of the review of an application and to continue to build agency insights about important contributors to risk at the proposed repository.

Response. One purpose of the Yucca Mountain Review Plan is to provide guidance to NRC staff on how to conduct a risk-informed, performance-based licensing review for a potential high-level waste repository at Yucca Mountain. The review plan, as revised, clarifies that the risk-informed, performance-based review, is not dictated solely by DOE.

Issue 3: How will risk-informed, performance-based principles be applied in a Yucca Mountain licensing review?

Comment. Several comments addressed the use of risk insights, to focus the review on those areas most important to repository performance. One commenter asked how NRC would decide which areas are most important to repository performance, and how the extent of the review of a given portion of the license application would be determined.

One commenter noted that Section 4.2.1.2.2, ''Identification of Events with Probabilities Greater Than 10^{-8} Per Year,'' of the draft Yucca Mountain Review Plan does not mention the risk-informed, performance-based review approach, and suggested that this section should be combined with Section 4.2.1.2.1, ''Scenario Analysis,'' of the draft Yucca Mountain Review Plan.

Another commenter asked whether NRC staff was aware that DOE's results were being probability weighted.

Response. Practical experience in conducting iterative performance assessments for the Yucca Mountain site has provided NRC staff with valuable insight regarding areas that are most likely to be important to health and safety. Until DOE submits a license application, however, it is premature to identify those areas of the postclosure performance assessment that would require the most detailed review. The review of DOE's scenario analysis and event probability described in Section 4.2.1.2 of the draft Yucca Mountain Review Plan would provide an initial foundation for focusing on credible events affecting repository performance. The review methods and acceptance criteria in Section 4.2.1.3, ''Model Abstraction,'' of the draft Yucca Mountain Review Plan provide a mechanism for evaluating the different sections of DOE's postclosure performance assessment. NRC staff would focus its review accordingly based on information in the DOE application and the areas that are most important to health and safety.

The concept of a risk-informed, performance-based review has been reiterated in this section and the text has been modified to clarify that establishing a probability range is an aspect of a risk-informed approach.

Section 4.2.1.2.2 has not been combined with Section 4.2.1.2.1. Section 4.2.1.2.2 addresses the specific requirements of 10 CFR 63.114(a)(4), and Section 4.2.1.2.1 addresses the specific requirements of 10 CFR 63.114(a)(5) and (6).

NRC staff review will determine whether probability weighting of results is mathematically and technically used appropriately in the license application.

Section 4.2.1.2.2 of the Yucca Mountain Review Plan has been clarified and modified in response to this comment.

9.6 Use of Guidance and Experience From Regulating Other Nuclear Facilities

Issue: To what extent should NRC rely on guidance and experience from regulating other nuclear facilities when evaluating a license application for a potential high-level waste repository at Yucca Mountain?

Comment. One commenter expressed concern that, because 10 CFR part 63 does not have performance objectives for administrative and programmatic

aspects, NRC staff relied on experience from regulating other nuclear facilities, including nuclear power plants, in developing these parts of the Yucca Mountain Review Plan. The commenter also noted that some of the preclosure sections of the draft Yucca Mountain Review Plan apparently rely on experience with fuel cycle facilities and nuclear power plants, but urged that the operations at the proposed Yucca Mountain repository have little in common with nuclear power plants and, hence, many reactor-related guidance documents may not be transferable. The commenter argued that repeated references to reactor-based documents (*e.g.*, NUREGs–2300 and 1278; Regulatory Guides 1.109 and 8.38; and references to the design of systems that are important to safety) support the observation that the Yucca Mountain Review Plan relies heavily on NRC documents prepared for and used in conjunction with the licensing of nuclear power plants.

The commenter suggested that NRC staff reevaluate inclusion of material from nuclear power plant reviews, and delete material and requirements that are not relevant to the safety of the proposed Yucca Mountain repository. For material deemed relevant, NRC staff should explain in the Yucca Mountain Review Plan, the use and relevance of reactor-based guides and policies, and should indicate where use of such material has been modified to account for differences between high-level waste disposal and nuclear power plant operation.

Response. The Yucca Mountain Review Plan has been modified to clarify that only applicable guidance, or portions of that guidance, are proposed for use in a licensing review for a high-level waste repository.

9.7 Use of Graphics

Issue: Could use of graphics clarify the purposes and use of the Yucca Mountain Review Plan?

Comment. Commenters stated that a process diagram that illustrates how decisions are made and how inadequacies are addressed would be helpful. Commenters noted that Figure 1–3 in ''Components of Performance Assessment Review'' provided information on how the potential for engineered barrier failure would be addressed and asked how other topics would be addressed.

One commenter recommended the use of tables, charts, and graphics to give the reader a high-level overview of activities under the Yucca Mountain Review Plan. The commenter suggested that an ''activity network,'' which diagrams how the Yucca Mountain Review Plan would be used would help identify linkages among plan sections. The commenter argued that an activity network diagram would also help communicate the completeness of the Yucca Mountain Review Plan and make the report more understandable to stakeholders.

Another commenter suggested that an appendix that referenced requirements from 10 CFR part 63 to the Yucca Mountain Review Plan would be useful.

Response. Graphics could be useful in promoting understanding of the Yucca Mountain Review Plan, and two have been added. One depicts the steps of the licensing process, and one describes how review of a license application section would be conducted using the Yucca Mountain Review Plan. Accompanying text in the review plan explains the graphics.

An appendix that cross-references requirements from 10 CFR part 63 to the Yucca Mountain Review Plan was not included because the related regulatory requirements are already identified in the evaluation findings portion of each review plan section.

Changes to address aspects of these comments were added to the new Appendix A (Licensing Review and the Yucca Mountain Review Plan) of the review plan.

9.8 Completeness of the Yucca Mountain Review Plan

Issue: Is the scope of the Yucca Mountain Review Plan adequate to evaluate the health and safety of a potential high-level waste repository at Yucca Mountain?

Comment. Several commenters had concerns regarding the adequacy of the scope of the Yucca Mountain Review Plan. The concerns included omission of potentially significant features, events, and processes; the nature of information that would be reviewed using the Review Plan for General Information; requirements for the size of restricted areas; the adequacy of the scope of a preclosure safety analysis; specificity of required design information; and the possibility that acceptance criteria were too lenient and subjective.

Response. The scope of the Yucca Mountain Review Plan is adequate and allows flexibility to evaluate whatever methods DOE might choose to demonstrate compliance.

The purpose of the ''Review Plan for General Information'' section of the Yucca Mountain Review Plan is to ensure that the requirements of 10 CFR 63.21(b) have been met. The General Information section of a license application should provide a general understanding of the engineering design concept for the repository and of the aspects of the Yucca Mountain site and its environs that influence repository design and performance. Information provided by DOE in response to the requirements of 10 CFR 63.21(b) for the General Information section should be at the level of an executive summary and is not expected to be detailed. The level of detail requested for the site characterization description in the General Information section of the Yucca Mountain Review Plan has been substantially reduced. Detailed information would be evaluated with respect to its importance to health and safety in sections that address review of DOE's Safety Analysis Report.

The probability and consequences of features, events, and processes would be subjected to a detailed review using review methods and acceptance criteria in the section of the Yucca Mountain Review Plan that examines Repository Safety After Permanent Closure.

There is no regulatory requirement mandating the size of restricted areas. However, general practice is that these areas are as small as operationally feasible to facilitate monitoring and control. A DOE physical protection plan would have maps and diagrams associated with physical protection methods and procedures inside restricted areas as required by 10 CFR 73.51.

The Yucca Mountain Review Plan identifies the methods and criteria NRC staff would use to determine regulatory compliance. The review methods and acceptance criteria in the Yucca Mountain Review Plan are flexible rather than prescriptive because: (i) NRC regulations at 10 CFR part 63 are risk-informed and performance-based, (ii) prescriptive review methods and acceptance criteria could foreclose the license applicant from using the most effective approaches to regulatory compliance, and (iii) DOE has not yet presented a preclosure safety analysis.

The Yucca Mountain Review Plan has been modified throughout, as appropriate, to clarify the scope of the risk-informed, performance-based review methods and acceptance criteria.

10 Selected Topics

10.1 Consistency With Regulations

Issue 1: Should the terminology in the Yucca Mountain Review Plan be made more consistent with regulations and be used in a more consistent manner?

Comment. Several commenters stated that the draft Yucca Mountain Review Plan uses terms that are inaccurate or

are inconsistent with the applicable regulations. The commenters recommended that the Yucca Mountain Review Plan be revised to more closely reflect the applicable regulations to minimize questions of interpretation. The commenters also suggested that the Yucca Mountain Review Plan directly reference appropriate regulations rather than paraphrasing them.

For example, the term ''safety case'' is used throughout the draft Yucca Mountain Review Plan, but is not defined either within the review plan or in 10 CFR part 63. One commenter stated that this term generally addresses more than a compliance demonstration, and confusion about its use may adversely affect both preparation and review of an application.

Commenters noted that terms used in the draft Yucca Mountain Review Plan were confused with common industry terms. For example, the terms ''technical specifications'' and ''license specifications'' are erroneously used interchangeably. ''License specifications'' is used and defined in 10 CFR part 63 and its use in the Yucca Mountain Review Plan should be consistent with this definition. Also, the term ''license conditions'' is used interchangeably with the term ''license specifications.'' In 10 CFR 63.43, license specification is defined in terms of license condition, but the Yucca Mountain Review Plan does not provide sufficient distinction between the two terms.

One commenter recommended replacing the term ''performance-based'' with ''experimental'' due to the lack of experience in storage for thousands of years. The commenter noted that use of the phrases ''risk-informed'' and ''performance-based'' was problematic because risk should mean probability times consequence, but this was not apparent in the Yucca Mountain Review Plan. The commenter further noted that the phrase ''risk-informed, performance-based,'' as applied over a period of thousands or millions of years require a workable definition.

Two commenters expressed concern with the discussion of ''open items'' or ''confirmatory items'' that might result from the licensing review. One argued that these items could be used to inappropriately accommodate licensing deficiencies and asked for assurance that such action would be prevented.

Another commenter requested that the term ''important to performance'' be defined consistent with 10 CFR part 63 and that the terms ''important to safety'' and ''important to waste isolation'' be included in the Yucca Mountain Review Plan glossary.

The commenters included a number of additional suggestions for improving Yucca Mountain Review Plan consistency and the effectiveness of the glossary.

Response. Terminology should be used consistently throughout the Yucca Mountain Review Plan and should be consistent with regulations. Revisions were made to the Yucca Mountain Review Plan, as appropriate, to address terminology concerns raised by commenters.

The term ''safety case'' has been removed from the Yucca Mountain Review Plan and, generally, has been replaced with the term ''license application.'' This change is more consistent with language in 10 CFR part 63; however, the removal of the term ''safety case'' should not be viewed as a lessening of an emphasis on health and safety for the repository.

Discussion and use of the terms ''technical specifications,'' ''license specifications,'' and ''license conditions'' have been clarified throughout the Yucca Mountain Review Plan to be consistent with 10 CFR 63.42 and 62.43. License conditions include license specifications that are derived from analyses and evaluations included in the application.

In developing 10 CFR part 63 and the Yucca Mountain Review Plan, NRC staff sought to establish a coherent body of risk-informed, performance-based criteria for Yucca Mountain that is compatible with the Commission's overall philosophy of risk-informed, performance-based regulations. [''Use of Probabilistic Risk Assessment Methods in Nuclear Regulatory Activities—Final Policy Statement'' (60 FR 42622, August 16, 1995).] Stated succinctly, risk-informed, performance-based regulation is an approach in which risk insights, engineering analysis and judgment (*e.g.*, defense in depth), and performance history are used to: (i) Focus attention on the most important activities; (ii) establish objective criteria for evaluating performance; (iii) develop measurable or calculable parameters for monitoring system and licensee performance; (iv) provide flexibility to determine how to meet the established performance criteria in a way that will encourage and reward improved outcomes; and (v) focus on the results as the primary basis for regulatory decision-making.

NRC defines risk as probability times consequence. Further, 10 CFR part 63 establishes the regulatory period of interest for a Yucca Mountain repository at 10,000 years, consistent with the Nuclear Waste Policy Act.

With respect to the concerns about possible misuse of ''open'' and ''confirmatory'' items, NRC will review the application to determine whether the requisite regulatory showing has been made and impose conditions, as necessary to address confirmatory items. ''Open'' items that relate to information required for regulatory findings must be addressed by DOE during the review.

The term ''important to performance'' has been replaced with ''important to safety'' or ''important to waste isolation,'' as appropriate, consistent with 10 CFR part 63.

These and other changes were made throughout the Yucca Mountain Review Plan to clarify the guidance and provide consistency with regulatory requirements.

Issue 2: Is the Yucca Mountain repository program being conducted consistent with legal requirements?

Comment. One commenter stated that the Yucca Mountain Review Plan violates a number of legislative mandates, Federal laws, an executive order, State and local constitutions, and an international treaty. Such documents include: The Nuclear Waste Policy Act; the National Environmental Policy Act; the Federal Administrative Procedures Act; the Safe Drinking Water Act; the Federal Facilities Management Act; Executive Order 12898 (''Federal Actions to Address Environmental Justice in Minority Populations and Low-Income Population''); the Ruby Valley Treaty of 1863; and regulations related to uncompensated takings.

Response. The Yucca Mountain Review Plan is a guidance document that sets forth an approach for NRC staff to determine whether the regulatory requirements of 10 CFR part 63 have been met. The regulations at 10 CFR part 63 were adopted in accordance with the laws of the United States. Any challenges to those regulations should be raised in the appropriate forum and are not appropriate for comment here.

No changes have been made to the Yucca Mountain Review Plan as a result of this comment.

10.2 Nature of Wastes To Be Disposed of in a High-Level Waste Repository

Issue: What types of radioactive wastes may be emplaced in a repository for high-level radioactive waste at Yucca Mountain?

Comment. One commenter asked several questions regarding the types and forms of waste that would be eligible for disposal in a repository for high-level radioactive waste at Yucca Mountain, Nevada. The questions included: (i) Whether liquid wastes could be interred; (ii) whether low-level or intermediate-level wastes could be interred; (iii) whether contaminated

operations equipment could be disposed of; (iv) whether radioactive chemical wastes could be interred; and (v) whether contaminated soils or contaminated mine tailings could be disposed of.

Response. The types and forms of waste that could be disposed of in a repository for high-level radioactive waste at Yucca Mountain are based on Section 2 of the Nuclear Waste Policy Act, as amended, and are defined in NRC regulations at 10 CFR 63.2. High-level waste means: (i) The highly radioactive material resulting from the reprocessing of spent nuclear fuel, including liquid waste produced directly in reprocessing and any solid material, derived from such liquid waste, that contains fission products in sufficient concentrations; (ii) irradiated reactor fuel; and (iii) other highly radioactive material that the Commission, consistent with existing law, determines, by rule, requires permanent isolation. Also, 10 CFR 63.2 defines radioactive waste as high-level waste and radioactive materials other than high-level waste that are received for emplacement in a geologic repository.

The Commission addressed the question of liquid wastes in its ''Statement of Considerations'' for 10 CFR part 63 (66 FR 55773, November 2, 2001), which states:

> Because of processing in the nuclear fuel cycle, some high-level waste can occur in the liquid (aqueous) state. However, this waste type is not expected to be disposed of at Yucca Mountain. Rather, liquid high-level waste will be vitrified—mixed with molten glass and solidified—to reduce the actual volume of waste and make it easier to handle.

DOE would have to demonstrate in its license application that wastes that are not the highly radioactive material resulting from the reprocessing of spent nuclear fuel (including liquid waste produced directly in reprocessing and solid material derived from such liquid waste that contains fission products in sufficient concentrations) or irradiated reactor fuel, are wastes that the Commission, consistent with existing law, determines, by rule, requires permanent isolation.

No changes were made to the Yucca Mountain Review Plan as a result of this comment.

10.3 The Meaning of Safety

Issue: Will results of a review conducted using the Yucca Mountain Review Plan adequately protect health and safety?

Comment: One commenter questioned whether a licensing review for a high-level waste repository at Yucca Mountain that is based on the regulatory requirements in 10 CFR part 63, and that uses the review methods and acceptance criteria in the Yucca Mountain Review Plan, would protect health and safety.

The commenter referred to a dictionary definition of safety as meaning free from danger and involving no risk. The commenter contended that this is the public interpretation of safety, and that agencies of the Federal government use different definitions since the Yucca Mountain Review Plan glossary does not define safety. The commenter assumed that the dictionary definition applies.

The commenter further noted that, when Yucca Mountain was selected as the sole site for characterization as a geologic repository, officials of DOE promised not to build the site if it was unsafe. The commenter stated that DOE often referred citizens to site suitability guidelines that included qualifying and disqualifying conditions. Also, NRC regulations included sub-system requirements that would ensure the site could be licensed only if safety could be assured. The commenter noted that these regulatory provisions have been eliminated and that a safety decision would now be based on the results of performance assessment. The commenter also stated that DOE has redefined safe in terms of satisfying regulations.

Response. A decision on whether to authorize construction of a high-level waste repository at Yucca Mountain will be based on whether DOE demonstrates it has satisfied applicable regulatory requirements. The standards for issuance of a construction authorization, for example, include a determination that (1) There is reasonable assurance that the types and amounts of radioactive materials described in the application can be received in the repository without unreasonable risk to public health and safety and (2) there is reasonable expectation that materials can be disposed of without unreasonable risk to public health and safety.

Among the requirements that must be met are the preclosure and postclosure performance objectives that are defined in NRC regulations at 10 CFR part 63. Simply stated, these performance objectives are quantitative radiation exposure limits. The Commission addressed the adequacy of performance assessment for evaluating compliance in its ''Statement of Considerations'' for 10 CFR part 63 (66 FR 55746–55747, November 2, 2001) as follows.

> Although repository postclosure performance is evaluated with respect to a single performance measure for individual protection, the NRC considers a broad range of information in arriving at a licensing decision. In the case of the proposed repository at Yucca Mountain, Part 63 contains a number of requirements (*e.g.*, qualitative requirements for data and other information, the consideration and treatment of uncertainties, the demonstration of multiple barriers, performance confirmation program, and QA program) designed to increase confidence that the postclosure performance objective is satisfied. The Commission will rely on the performance assessment as well as DOE's compliance with these other requirements in making a decision, if DOE submits a license application for disposal of HLW at Yucca Mountain. The Commission believes the approach for performance assessment in the proposed rule is appropriate and it is retained in the final rule. However, requirements for QA, multiple barriers, and performance confirmation have been revised to clarify the Commission's intent for these requirements * * *
>
> The Commission believes that there have been significant advances in, and experience with, risk assessment in the past 20 years (see Commission's white paper on Risk-Informed and Performance-Based Regulation, March 1999). The Commission continues to believe that a performance assessment, developed with sufficient credibility, is the best means to provide useful information to the Commission for making an informed, reasonable licensing decision. The Commission recognizes, however, the uncertainties inherent in evaluating a first-of-a-kind facility like the repository and in estimating system performance over very long time periods (*i.e.*, 10,000 years). Thus, proposed Part 63 contained requirements to ensure that: (1) Uncertainties inherent in any performance assessment are thoroughly articulated and analyzed or addressed; (2) DOE's performance assessment is tested (corroborated) to the extent practicable; and (3) there are additional bases, beyond the performance assessment, that provide confidence that the postclosure performance objectives will be met.

In essence, safety is defined by 10 CFR part 63. A determination as to whether a repository for high-level radioactive waste at Yucca Mountain can be operated safely will be based on the information presented in a license application, and the evidence presented in the adjudicatory proceeding before the NRC.

No changes have been made to the Yucca Mountain Review Plan in response to this comment.

10.4 Reasonable Assurance and Reasonable Expectation

Issue: Does the difference in the meanings of the terms ''reasonable assurance'' and ''reasonable expectation'' need to be clarified?

Comment. One commenter asked that the meanings of the terms reasonable assurance and reasonable expectation be clarified. The commenter stated that, as used in the draft Yucca Mountain Review Plan, these terms seem to mean approximately the same thing. The commenter argued that this was not the intent of NRC when it promulgated 10 CFR part 63.

The commenter agreed that use of reasonable assurance as a measure of compliance for preclosure safety was appropriate and consistent with NRC regulation of other nuclear facilities. However, the commenter opined that reasonable expectation implies a different standard that recognizes the inherent uncertainties in predicting repository performance far into the future. The differences include the need for realistic, rather than bounding, modeling approaches, and for taking into account the stepwise nature of repository licensing. According to the commenter, a reasonable expectation standard should allow for considerable information to be added after a license is initially granted, but before repository closure. The commenter argued that reasonable expectation should allow gaps in understanding to exist at the time a license is initially granted, provided adequate efforts to address these gaps are implemented.

The commenter added that the U.S. Environmental Protection Agency defined reasonable expectation in 40 CFR part 197 with the intent that it be explicitly different from reasonable assurance and allowed NRC the flexibility to determine how the term would be applied. Since the Yucca Mountain Review Plan is the key NRC implementation guidance, the distinction between reasonable assurance and reasonable expectation should be clear in the Review Plan.

Response. The Commission addressed its adoption and use of the reasonable expectation and reasonable assurance regulatory compliance standards in its ''Statement of Considerations'' for 10 CFR part 63 (66 FR 55739–55740, November 2, 2001) where it stated:

> Confidence that DOE has, or has not, demonstrated compliance with EPA's standards is the essence of NRC's licensing process. It is the Commission's responsibility to determine whether DOE has or has not demonstrated compliance. The Commission does not believe that NRC's use of ''reasonable assurance'' as a basis for judging compliance compels focus on extreme values (*i.e.*, tails of distributions) for representing the performance of a Yucca Mountain repository. Further, if DOE is authorized to file a license application, and if the Commission is called on to make a decision, irrespective of the term used, the Commission will consider the full record before it. That record will include many factors in addition to whether the site and design comply with the performance objectives (both preclosure and postclosure performance standards) contained in Subparts E, K, and L. The Commission could consider the QA program, personnel training program, emergency plan and operating procedures, among others, in order to determine whether it has confidence that there is no unreasonable risk to the health and safety of the public. To avoid any misunderstanding and to achieve consistency with final EPA standards, the Commission has decided to adopt EPA's preferred criterion of ''reasonable expectation'' for purposes of judging compliance with the postclosure performance objectives. The Commission is satisfied that a standard of ''reasonable expectation'' allows it the necessary flexibility to account for the inherently greater uncertainties in making long-term projections of a repository's performance. The Commission agrees with EPA and others that it is important to not exclude important parameters from assessments and analyses simply because they are difficult to precisely quantify to a high degree of confidence. By adopting what EPA has characterized as a more flexible standard of ''reasonable expectation'' for determining compliance with postclosure performance objectives, the Commission hopes to make clear its expectations. The Commission expects that the required analyses of postclosure performance will focus on the full range of defensible and reasonable parameter distributions, and that they should not be constrained only to extreme physical situations and parameter values. For other determinations regarding compliance of the repository with preclosure objectives, the Commission will retain a standard of ''reasonable assurance,'' consistent with its practice for other licensed operating facilities subject to active licensee oversight and control.
>
> * * * * *
>
> As stated previously, in order to avoid further misunderstanding of its intent, the Commission will adopt EPA's preferred standard of ''reasonable expectation'' for purposes of judging compliance with the numerical postclosure performance objectives. However, the Commission wants to make clear that its proposed use of ''reasonable assurance'' as a basis for judging compliance was not intended to imply a requirement for more stringent analyses (*e.g.*, use of extreme values for important parameters) or for comparison with a potentially more stringent statistical criteria (*e.g.*, use of the 95th percentile of the distribution of the estimate of dose).

No changes have been made to the Yucca Mountain Review Plan as a result of this comment.

11 Other Comments

11.1 Codes and Standards

Issue: Should the Yucca Mountain Review Plan identify specific codes and standards to be used by the applicant?

Comment. One commenter stated that the draft Yucca Mountain Review Plan refers to codes and standards that are not compatible with the risks from a geologic repository. The commenter recommended that the Yucca Mountain Review Plan be revised to clarify that the applicant has the flexibility to use codes, standards, and methodologies it demonstrates to be applicable. Another commenter noted that some referenced codes and standards were outdated.

Commenters identified locations in the draft Yucca Mountain Review Plan related to their concerns.

Response. The risk-informed, performance-based regulations at 10 CFR part 63 give the applicant the responsibility to select codes, standards, and methodologies; demonstrate that they are appropriate for use with a geologic repository for high-level waste; and then use them appropriately. When specific codes, standards, or methodologies were listed in the Yucca Mountain Review Plan, they were included only as examples or to indicate the kinds of approaches that have been successfully used in other licensing programs.

The Yucca Mountain Review Plan has been revised to clarify that references to specific codes, standards, methodologies, or outdated codes have been deleted.

11.2 General Comments on the License Application and the Licensing Process

Issue 1: Will NRC ignore mistakes in a DOE license application?

Comment. Two commenters asked whether NRC would ignore mistakes in DOE's license application and how the Commission would address major problems in DOE's work. One commenter also stated that NRC must have the power to reject a license application.

Response. A DOE license application must demonstrate compliance with applicable regulations. Editorial mistakes that prevent NRC from understanding the compliance demonstration may have to be corrected. Technical mistakes could even invalidate a DOE analysis to demonstrate compliance. The nature, extent, and effects of mistakes in a license application would be considered in the NRC review.

NRC has the statutory authority as well as the responsibility to reject a license application if the applicant fails to show that applicable regulatory requirements are satisfied.

No changes to the Yucca Mountain Review Plan were made in response to this comment.

Issue 2: Does a DOE license application exist?

Comment. One commenter asked whether a DOE license application already existed.

Response. It is NRC's understanding that DOE had not yet prepared a license application.

No changes to the Yucca Mountain Review Plan were made in response to this comment.

Issue 3: Will NRC hold DOE to appropriate standards in a licensing review?

Comment. One commenter asked whether NRC would hold DOE to the same standards that produced failures of high-level waste storage at other sites. Other commenters asked whether DOE's past research, organizational structure, and organizational culture would be considered in a licensing review for a high-level waste repository at Yucca Mountain.

Response. NRC has promulgated regulatory requirements for a high-level waste repository at 10 CFR part 63. These regulations require protection of public health and safety, and the environment. If DOE's license application demonstrates compliance with regulatory requirements at 10 CFR part 63, and applicable requirements in 10 CFR part 51, for high-level radioactive waste repository at Yucca Mountain, NRC staff would recommend issuance of a construction authorization or license to receive and possess waste, as appropriate.

DOE organization and qualifications are addressed in the following three sections of the draft Yucca Mountain Review Plan: (i) 4.5.3.1, ''DOE Organizational Structure as it Pertains to Construction and Operation of Geologic Repository Operations Area''; (ii) 4.5.3.2, ''Key Positions Assigned Responsibility for Safety and Operations of Geologic Repository Operations Area''; and (iii) 4.5.3.3, ''Personnel Qualifications and Training Requirements.'' A licensing review using these sections of the Yucca Mountain Review Plan would support a conclusion as to whether DOE may receive a license for a high-level waste repository at Yucca Mountain.

No changes to the Yucca Mountain Review Plan were made in response to this comment.

Issue 4: Will NRC regulations be rewritten to accommodate a Yucca Mountain license application?

Comment. One commenter asked whether NRC would change its regulations to accommodate a Yucca Mountain license application. One commenter asked whether performance bases are expected to change as waste is processed and interred at a repository. Another commenter stated that NRC modified the standards for Yucca Mountain because DOE could not meet them.

Response. NRC regulations at 10 CFR part 63 were promulgated to specifically address an application for a potential repository at Yucca Mountain and were developed through a public rulemaking process. There are no plans to revise these regulations.

No changes were made to the Yucca Mountain Review Plan in response to this comment.

Issue 5: What level of conservatism is appropriate in licensing a high-level waste repository at Yucca Mountain?

Comment. One commenter stated the statement in the draft Yucca Mountain Review Plan ''Introduction'' (now Appendix A) that NRC cannot require a different or additional proposal if the application satisfies applicable regulations to encourage an applicant to demonstrate compliance using non-conservative methods. The commenter noted that this approach is unacceptable for a repository with a disposal period of 10,000 years, and that the U.S. Department of Energy should be required to use the most conservative approach for demonstrating compliance.

Another commenter expressed the opposite concern that the very reliance on the use of ''bounding values'' is not consistent with a reasonable expectation compliance standard. The commenter noted that it may be necessary to use expert judgement in some cases and that the Yucca Mountain Review Plan should explicitly allow use of such judgement, or other accepted techniques, in certain circumstances. The commenter suggested that NRC staff adopt an ''expected behavior approach'' similar to that used by the commercial nuclear power industry, noting the similarities and differences in power reactor and repository licensing issues and acknowledging that the time and spatial scales for a repository limit the use of direct frequency data. To address this concern, the commenter suggested the use of natural analogue data, and the collection of data over longer time periods, to confirm models.

The same commenter suggested a dual modeling approach that uses the ''expected behavior'' model followed by application of conservative assumptions in areas where it might be difficult to accurately define the expected conditions. The intent would be that a conservative model would be used for the licensing decision, while the expected behavior model would be used to provide regulatory insight.

Response. NRC's regulations at 10 CFR part 63, are protective of health and safety and the environment. Therefore, ensuring compliance with them would protect health and safety and the environment and accomplish the mission of NRC.

Regulation of nuclear facilities requires realistic or reasonably conservative approaches that take into account importance to safety, technical complexity, and the degree and nature of associated uncertainty. These concepts underlie the ''reasonable assurance'' and ''reasonable expectation'' bases that would be applied in NRC staff's review of a license application for a high-level waste repository at Yucca Mountain.

The Commission addressed the issue of conservatism in the ''Statements of Considerations'' for 10 CFR part 63 (66 FR 55732, November 2, 2001). In ''Statements of Considerations,'' the Commission stated, in part

> Confidence that DOE has, or has not, demonstrated compliance with EPA's standards is the essence of NRC's licensing process * * *. The Commission does not believe that NRC's use of ''reasonable assurance,'' as a basis for judging compliance compels focus on extreme values (*i.e.*, tails of distributions) for representing the performance of a Yucca Mountain repository. Further * * * if the Commission is called on to make a decision * * * the Commission will consider the full record before it. That record will include many factors in addition to whether the site and design comply with the performance objectives (both preclosure and postclosure performance standards) * * * The Commission could consider the QA program, personnel training program, emergency plan and operating procedures, among others, in order to determine whether it has confidence that there is no unreasonable risk to the health and safety of the public.
>
> The Commission is satisfied that a standard of ''reasonable expectation'' allows it the necessary flexibility to account for the inherently greater uncertainties in making long-term projections of a repository's performance. The Commission agrees with EPA and others that it is important to not exclude important parameters from assessments and analyses simply because they are difficult to precisely quantify to a high degree of confidence * * *. The Commission expects that the required analyses of postclosure performance will focus on the full range of defensible and reasonable parameter distributions, and that they should not be constrained only to extreme physical situations and parameter values. For other determinations regarding compliance of the repository with preclosure objectives, the Commission will retain a standard of ''reasonable assurance'' consistent with its practice for other licensed operating facilities subject to active licensee oversight and control.

Changes have been made throughout the Yucca Mountain Review Plan, as necessary, to ensure that the use of conservatism is clearly stated.

Issue 6: How should requests for additional information be managed?

Comment. Commenters expressed concern about the NRC staff goal to limit requests for additional information to one round. One commenter stated that it is unacceptable for NRC staff to impose such a limit. Considering the complexity of issues associated with a potential high-level waste repository at Yucca Mountain, NRC staff should prepare requests for additional information as necessary until the licensing information is adequate. One commenter stated that DOE's performance record implies that one round will not be sufficient and asked (1) If a limited number of requests for additional information would be allowed and (2) if NRC would allow DOE to submit an incomplete license application and then tell it how to make it acceptable. Another commenter asked for information on how DOE's responses to requests for additional information would be addressed.

Response. Imposing a limit of one round of requests for additional information is not necessary. The Yucca Mountain Review Plan does not impose such a limit, but provides guidance that the goal is to complete an effective review with only a single round of requests for additional information. This is a goal in other NRC regulatory programs as well.

DOE responses to requests for additional information would be evaluated during the NRC licensing review.

The Yucca Mountain Review Plan has been revised to clarify that preparing a single round of requests for additional information is a goal for the licensing review.

Issue 7: Is there a timing constraint on the NRC licensing review and preparation of a safety evaluation report?

Comment. One commenter stated that it would be premature to publish a draft safety evaluation report before the licensee has produced the information necessary for a license. The commenter went on to state that early publication of a safety evaluation report would indicate a rush to judgement before necessary information is available. Two commenters questioned the schedule for a high-level waste repository licensing review. One commenter asked when the 3-year time limit begins. Another commenter noted that DOE should be prepared for one or more application rejections if the application is inadequate and that the licensing process could require several 3-year cycles.

Response. The NRC detailed technical licensing review begins after the license application is found acceptable for review and is docketed. NRC plans to decide whether to docket the tendered application within 90 days from the receipt of the license application. If the license application is incomplete and not sufficient to support a detailed technical review, the application could be rejected or DOE could be informed of the deficiencies and given an opportunity to correct them. If DOE is unable to correct them within a reasonable period, the license application could be rejected. Section 114 of the Nuclear Waste Policy Act requires the Commission to issue a final decision approving or disapproving the issuance of a construction authorization not later than the expiration of three years after the date of submission of an application. A one-year extension from Congress may be requested by the NRC.

Preparation of a safety evaluation report depends on whether NRC staff has reached conclusions regarding whether the applicant has satisfied applicable regulatory requirements. The entire detailed licensing review need not be complete before NRC staff may begin preparation of the safety evaluation report. Conclusions on compliance with discrete regulatory requirements may be possible early in the review period and associated portions of the safety evaluation report may be prepared if those conclusions can be independently reached. Conclusions related to regulatory requirements that require complex, multidisciplinary, or integrated assessment may not be possible until late in the licensing review and would be documented in a safety evaluation at that time.

A safety evaluation report could conclude that a license should not be granted. In any event, a draft safety evaluation report, if published, would not contain final NRC staff conclusions on regulatory compliance and would be subject to revision.

The Yucca Mountain Review Plan text has been modified, as necessary, to clarify provisions regarding preparation of a safety evaluation report.

Issue 8: Would a license for a high-level waste repository at Yucca Mountain include an option to store wastes temporarily?

Comment. One commenter asked whether a license for a high-level waste repository at Yucca Mountain would include an option to store wastes temporarily.

Response. Since the NRC has not yet received a license application for a high-level waste repository at Yucca Mountain, it would be speculation to state whether the license would authorize temporary storage of wastes.

No changes have been made to the Yucca Mountain Review Plan in response to this comment.

Issue 9: What would be the term of a license for a high-level waste repository at Yucca Mountain and would the license be renewable?

Comment. One commenter asked that NRC define the period over which a license for a high-level waste repository at Yucca Mountain would be in effect and to state whether license renewal would be allowed.

Response. Requirements for issuance of a license for a high-level waste repository at Yucca Mountain are specified in 10 CFR part 63, subpart B. There are no provisions for renewal of a license. Rather, unless such a license is revoked or suspended, it would be in effect until an application for license termination satisfies the requirements of 10 CFR 63.52(c). At that time, NRC would terminate the license and NRC oversight of the site would end.

No changes have been made to the Yucca Mountain Review Plan in response to this comment.

Issue 10: Would a licensing review conducted using the Yucca Mountain Review Plan adequately consider available information about the Yucca Mountain site?

Comment. Two commenters expressed several concerns regarding the potential for and effects of the Yucca Mountain site failing to perform properly. The commenters noted a concern, shared by farmers in Amargosa Valley, that the potential damage from contaminated groundwater to the agricultural resource in well-irrigated land around Yucca Mountain has not been adequately evaluated, especially considering that the population is expected to double in 40 years.

The commenters stated that DOE ignored results of water surveys, by Lawrence Livermore National Laboratory, that proved the existence of interbasin groundwater flow from an aquifer under Yucca Mountain to the water supplies for Los Angeles and Las Vegas.

In a related concern, one commenter stated that DOE scientists had objected to the recent Yucca Mountain site recommendation because they needed at least six more years to complete enough scientific work to make a responsible rejection or recommendation. The commenter also urged that NRC consider the concerns of the Nuclear

Waste Technical Review Board, and Dr. Victor Gilinsky that deep geologic disposal of nuclear waste carries with it the possibility of irretrievable and irremediable error. The commenter stated that NRC, under the Nuclear Waste Policy Act, should reject the license application, because Yucca Mountain is unsuitable as a repository site because of water issues and earthquakes.

Response. NRC will evaluate the information submitted in a license application and any accompanying documents to determine whether the application satisfies regulatory requirements, *i.e.*, whether health and safety, and the environment will be protected. The regulations in 10 CFR part 63 and 10 CFR part 51 are protective of health and safety and the environment.

No changes have been made to the Yucca Mountain Review Plan in response to this comment.

Issue 11: Have the key technical issues related to the Yucca Mountain site been omitted from the scope of the Yucca Mountain Review Plan?

Comment: Two commenters expressed concern that the key technical issues that were supposed to be addressed by DOE have been omitted from the Yucca Mountain Review Plan.

Response. Nine key technical issues which were identified during the prelicensing consultation period are largely centered on individual scientific or engineering disciplines. The Yucca Mountain Review Plan has 14 physical processes (called model abstractions) that NRC staff considers most important to health and safety. These 14 model abstractions are multidisciplinary and are derived from the uncertainties associated with the key technical issues.

NRC staff would use these 14 model abstractions as the foundation for conducting its assessment of DOE's performance assessment during a licensing review. Therefore, the portion of the Yucca Mountain Review Plan that examines postclosure performance has been structured around these abstractions. Technical concerns associated with the key technical issues have been incorporated in the model abstractions.

No changes to the Yucca Mountain Review Plan have been made in response to this comment.

Issue 12: Is there a difference between requests for additional information prepared during an acceptance review and those prepared during a detailed technical review?

Comment. One commenter noted that Section 1.2.1, ''Acceptance Review Objectives,'' (now Appendix A, Section A1.2.1) of the Yucca Mountain Review Plan directs NRC staff to identify additional information needed to make the application complete. The commenter noted that Section 1.2, ''General Review Procedure,'' (now Appendix A, Section A1.2) states that gaps in information necessary to make a licensing conclusion should serve as the basis for NRC staff requests for additional information. The commenter asked if there are differences between these two types of information needs.

Response. These two types of information request have slightly different purposes. Requests for information stemming from an acceptance review generally would identify deficiencies in the application and ask the DOE to provide information that would make a license application complete enough to begin a detailed technical review. Examples might be missing maps of facility structure locations or missing historical meteorological data.

Requests for additional information prepared during detailed technical review would provide NRC staff with sufficient information to determine whether regulatory requirements have been met.

No changes were made to the Yucca Mountain Review Plan as a result of this comment.

Issue 13: How can information from prelicensing interactions be used during a licensing review for a high-level waste repository at Yucca Mountain?

Comment. One commenter noted that the many years of DOE and NRC prelicensing interactions have given NRC a considerable opportunity to review the breadth and depth of DOE's work related to a Yucca Mountain repository. The commenter suggested that the Yucca Mountain Review Plan explicitly recognize the progress made during prelicensing reviews and communicate the extent to which NRC staff should consider the results of these prelicensing interactions.

Response. During prelicensing issue resolution activities with DOE, NRC staff has become knowledgeable about technical issues associated with the repository and prepared to conduct a licensing review. No licensing decisions have been reached during prelicensing interactions. NRC staff will conduct a licensing review for a proposed high-level waste repository at Yucca Mountain and make findings based on the information and compliance demonstrations presented in the license application and any other information submitted by DOE.

No changes have been made to the Yucca Mountain Review Plan in response to this comment.

Issue 14: Will NRC staff have adequate resources to conduct a licensing review for a potential high-level waste repository at Yucca Mountain?

Comment. One commenter expressed concern regarding whether NRC staff would have adequate numbers of qualified staff to conduct a licensing review for a potential high-level waste repository at Yucca Mountain. Other commenters expressed concerns that NRC would be unable to obtain qualified reviewers or that all qualified reviewers would retire by the time a license application is submitted.

Response. NRC is taking steps to ensure that it has qualified staff sufficient to conduct a licensing review for a potential high-level waste repository at Yucca Mountain.

No changes have been made to the Yucca Mountain Review Plan in response to this comment.

Issue 15: Are requirements on DOE for data traceability, transparency, retrievability, reproducibility, and consistency adequate?

Comment. One commenter raised several concerns related to requirements on DOE for data traceability, transparency, retrievability, reproducibility, and consistency. These concerns included: (i) Whether the license application would be hypertext linked to supporting documentation; (ii) whether access to DOE data tracking numbers is adequate; (iii) whether reference materials are kept updated and interrelated; (iv) whether historically defined quality system weaknesses are to be corrected; (v) whether data can be located; (vi) whether calculation or modeling results can be duplicated; and (vii) whether adequate technical bases will be available. The commenter suggested the use of DOE ''road maps,'' to help resolve these concerns.

Response. There is a publicly available record of NRC and DOE interactions during the prelicensing consultations on the commenter's concerns. Responses to similar comments on the Quality Assurance Program section of the Yucca Mountain Review Plan are addressed in response to issues above. Separate guidance is under development addressing the usage of hyperlinks in the license application.

NRC staff will continue to observe DOE's quality assurance program and will require compliance with quality assurance requirements in 10 CFR part 63, subpart G, ''Quality Assurance

Program'' during the license application review.

No changes were made to the Yucca Mountain Review Plan in response to this comment.

Issue 16: What are the penalties for exceeding radiation exposure limits?

Comment. One commenter asked what the penalties would be for exceeding radiation protection limits. The commenter also asked for the criteria for revocation of a repository license.

Response. NRC has a rigorous inspection and enforcement program for licensed facilities. The enforcement program reflects a hierarchy of violations and penalties based on the severity of a violation. Depending on the circumstances, enforcement actions could include the imposition of civil penalties or revocation of a license. If warranted, violations would be referred to the U.S. Department of Justice for prosecution. Information on the NRC inspection program can be obtained by visiting NRC's Web site at *http://www.nrc.gov.*

No changes were made to the Yucca Mountain Review Plan as a result of this comment.

Issue 17: What enforcement action will be taken if the DOE violates NRC regulations?

Comment. One commenter asked whether the Yucca Mountain Review Plan states the actions NRC would take if DOE violated regulations or was untruthful.

Response. The Yucca Mountain Review Plan is guidance for the NRC staff review of a DOE license application and does not address possible enforcement actions. Pursuant to 10 CFR 63.10, information provided to NRC, or required to be maintained by law, by a license, or license applicant, must be complete and accurate in all material aspects. Deliberate violations of NRC requirements are addressed in 10 CFR 63.11. Enforcement action depends on the severity of a violation and could range from issuance of a notice of violation to the issuance of an order to impose a civil penalty (or to modify, suspend, or revoke a license), or other appropriate action.

No changes were made to the Yucca Mountain Review Plan in response to this comment.

Issue 18: What would be the extent of NRC on-site presence at the repository and the NRC staff role after the licensing process?

Comment. One commenter stated that NRC should provide personnel for site monitoring on a continuous basis from the time the Yucca Mountain project starts until it is completed. The commenter also asked whether NRC staff conducted unexpected on-site inspections during the various stages of a project. One commenter asked that NRC staff specify its role after the licensing process.

Response. The Commission discussed the nature of its on-site activities at Yucca Mountain in its ''Statement of Considerations'' for 10 CFR part 63 (66 FR 55768, November 2, 2001) by stating:

> The NRC maintains a local onsite representative's office, with a small staff, in Las Vegas, Nevada, as a means of keeping abreast of DOE activities and interacting with other stakeholders. This office allows our onsite representatives physical proximity to the site and the opportunity to interact on various site characterization activities. At this time, the NRC has no plans to expand the size of the onsite representative's office. However, the size of the office, as well as the scope of NRC's activities conducted there, is [are] subject to reexamination.

If a license is granted for a high-level waste repository at Yucca Mountain, NRC staff will carry out its statutory and regulatory responsibilities to ensure adequate protection of health and safety, to promote the common defense and security, and to protect the environment. NRC staff plans to have onsite representatives based in Las Vegas, Nevada, and would implement an inspection program that would continue for the operational lifetime of a repository. These measures are similar to those employed at other nuclear facilities.

No changes were made to the Yucca Mountain Review Plan in response to this comment.

Issue 19: What is NRC staff's plan if it cannot complete the licensing review for a high-level waste repository at Yucca Mountain within the legally mandated time frame?

Comment. One commenter asked whether NRC staff had a plan for the possibility that it might not complete a Yucca Mountain licensing review within the legally mandated time frame.

Response. NRC staff plans to complete its review of an application for a proposed repository at Yucca Mountain in sufficient time to enable the Commission to decide whether to issue a construction authorization within the legally mandated three-four year time frame. If additional time is needed to fully consider issues raised in the adjudicatory proceeding, NRC will seek appropriate relief.

No changes were made to the Yucca Mountain Review Plan in response to this comment.

Issue 20: How will NRC staff handle a change to repository design or operations during the licensing proceeding?

Comment. One commenter asked how NRC staff would respond if, during the licensing process, DOE requested more space for a larger repository footprint.

Response. NRC response to this hypothetical situation would depend on whether the change was encompassed by the analysis in the license application and was addressed in the environmental impact statement. NRC would expect DOE to revise or supplement its application to address such changes. NRC would then determine whether the application, as revised, satisfies regulatory requirements.

No changes were made to the Yucca Mountain Review Plan in response to this comment.

Issue 21: Why would radioactive wastes be generated during operations at a high-level waste repository at Yucca Mountain?

Comment. One commenter expressed concern that NRC is expecting DOE to reprocess spent fuel or to operate a nuclear reactor at a Yucca Mountain repository. The commenter cites a portion of Review Method 1 in the draft Yucca Mountain Review Plan, Section 4.1.1.6, ''Identification of Structures, Systems, and Components Important to Safety, Safety Controls, and Measures to Ensure Availability of the Safety Systems,'' which notes that a license application must include adequate consideration of ''* * * means to control radioactive waste and radioactive effluents * * * such as: * * * liquid waste management system to handle the expected volume of potentially radioactive liquid waste generated during normal operations * * *.'' The commenter stated that the public does not expect the Yucca Mountain site to be generating radioactive waste during normal operations and asked if there was another explanation for this review method.

Response. A license for a geologic repository at Yucca Mountain would not authorize the reprocessing of spent fuel or operation of a nuclear power reactor at the site. Experience from other nuclear facilities where high-level radioactive waste and spent fuel handling and packaging take place, however, indicates that small amounts of radioactive waste (*e.g.*, gloves) will be generated during fuel handling, packaging, testing, and decontamination activities. These materials generally may be classified as low-level waste and would be disposed of appropriately. This review method addresses a regulatory requirement at 10 CFR 63.112, ''Requirements for Preclosure Safety Analysis of the Geologic

Repository Operations Area,'' Subsection (e)(10), which requires an analysis that includes ''* * * means to control radioactive waste and radioactive effluents, and permit prompt termination of operations and evacuation of personnel during an emergency * * *.''

No changes were made to the Yucca Mountain Review Plan as a result of this comment.

Issue 22: Would emergency response capability to respond to potential radiological accidents at a high-level waste repository at Yucca Mountain be adequate?

Comment. One commenter expressed several concerns regarding emergency response planning including: (i) Whether local emergency response personnel would have to be mobilized to respond to radioactive waste spills; (ii) whether NRC intends to fund the purchase of equipment necessary to neutralize the effects of a radiation spill; (iii) whether NRC will educate the public on self-protection during radiation emergencies; and (iv) whether drills would be conducted for evacuation of a large population threatened by radiation exposure.

Response. The Commission addressed issues related to emergency preparedness and response in its ''Statement of Considerations'' for 10 CFR part 63 (66 FR 55745–55746, November 2, 2001) as follows:

> Part 63 (Subpart I) requires DOE to submit an emergency plan for coping with radiological accidents. NRC's review of DOE's emergency plan will evaluate the adequacy of the plan including such things as the capability to respond to accidents and medical assistance for treatment of radiological injuries. Where DOE's emergency plan is found to be inadequate, NRC, if necessary, can impose license conditions that require DOE to correct any deficiencies. * * *
>
> Additionally, U.S. Federal Emergency Management Agency (FEMA) regulations, as well as DOE orders, require that DOE have an emergency response capability that is adequate to meet anticipated accidents, including potential radiological accidents. DOE is responsible for ensuring that the emergency treatment capability exists and is documented in its emergency plan, which is subject to NRC review in accordance with Section 63.161.

In response to a comment regarding the required scope of emergency plans the Commission stated (66 FR 55746, November 2, 2001):

> The rule requires DOE to have plans to cope with radiological accidents (emergency planning at section 63.161) and provide for physical protection (Section 63.21(b)(3)). These plans are required to address a number of criteria to ensure that DOE is prepared to respond, both on site and off site, to accidents, and that DOE has the capability to detect and respond to unauthorized access and activities that could threaten the physical protection of high-level waste. As noted * * *, NRC and [U.S. Federal Emergency Management Agency] regulations, as well as DOE orders, require that DOE have adequate plans and procedures in place to address any potential accidents and incidents. DOE's emergency plan and physical protection plan are subject to NRC review. The Commission believes that the requirements for DOE's plans for emergencies and physical protection expressed in the proposed Part 63 are appropriate and has retained them in the final rule. In light of the terrorist attacks of September 11, 2001, the Commission has directed the staff to conduct a comprehensive reevaluation of NRC physical security requirements. If this effort indicates that NRC's regulations or requirements warrant revision, such changes would occur through a public rulemaking or other appropriate methods.
>
> Section 63.161 requires DOE to develop an emergency plan based on the criteria of Section 72.32 (*i.e.*, criteria provided for an Emergency Plan for an Independent Spent Fuel Storage Installation (ISFSI)). The required Emergency Plan includes: Identification of each type of accident; description of the means of mitigating the consequences of each type of accident; prompt notification of offsite response organizations; and adequate methods, systems, and equipment for assessing and monitoring actual or potential consequences of a radiological emergency condition. If particular types of accidents require evacuation procedures to ensure the protection of public health and safety, they will be included in the Emergency Plan.
>
> Section 63.21(b)(3) requires DOE to submit a detailed plan to provide physical protection of HLW in accordance with § 73.51 (requirements for physical protection of stored spent nuclear fuel and HLW). The requirements for physical protection include: (1) Capabilities to detect and assess unauthorized access or activities and protect against loss of control of the facility; (2) limiting access to HLW by means of two physical barriers; (3) providing continual surveillance of the protected area in addition to protection by an active intrusion alarm; and (4) providing a primary alarm station located within the protected area and have [having] bullet-resisting walls, doors, ceiling, and floor. These requirements provide high assurance that physical protection of the repository includes appropriate measures to prevent and respond to unauthorized access and activities, including the potential for armed intruders (*e.g.*, terrorist activity).

The Commission also addressed infrastructure requirements for emergency response (66 FR 55746, November 2, 2001).

> Section 180(c) of the Nuclear Waste Policy Act requires DOE to provide technical assistance and funding for training State and local governments and Tribes for safe routine transportation and emergency response. However, NRC's responsibility for oversight and review of DOE's emergency plans * * * does not include responsibility for how DOE provides for technical assistance and funding. Additionally, under NEPA, the potential for (environmental) impacts due to transportation, including accidents, is the responsibility of DOE to assess and mitigate.

Section 4.5.7, ''Emergency Planning,'' of the draft Yucca Mountain Review Plan provides guidance regarding the review of DOE's application with respect to emergency planning regulations.

No changes were made to the Yucca Mountain Review Plan as a result of this comment.

11.3 Issue Resolution

Issue: When will the 293 agreements regarding key technical issues be resolved?

Comment. Commenters asked when the 293 identified unresolved issues would be resolved and whether the repository would be licensed if the issues were unresolved. One commenter stated that if NRC staff uses the technical understanding and basis for issue resolution developed during prelicensing, it must explicitly reference to the supporting documentation. One commenter was concerned that haste in issue resolution would result in some issues not being properly resolved. Another commenter stated that DOE's site recommendation is premature and that years are still required to amass information necessary for a license application. Another commenter asked whether issues identified by the U.S. Government Accounting Office would be included in the licensing process.

Response. In 293 agreements with NRC, DOE agreed to provide additional information to NRC regarding key technical issues as part of the prelicensing issue resolution process. NRC staff expects that this prelicensing issue resolution will continue up to the time that DOE submits an application for a construction authorization for a repository at Yucca Mountain and that DOE will address the 293 agreements before submitting the application. During prelicensing interactions with DOE, NRC staff has stayed informed on issues related to DOE's site characterization and the repository design process and identified concerns regarding these issues in public meetings and documents. Issues identified by the U.S. Government Accounting Office were taken from issues raised by NRC staff.

NRC staff has made clear that a licensing decision will be based on information contained in the DOE application. Issues may be reopened, or new issues may be identified, during the

review of the license application. A construction authorization for a repository at Yucca Mountain will not be issued unless DOE demonstrates, and NRC staff determines, that applicable regulatory requirements have been met. NRC staff will document the basis for its conclusions on the application in a safety evaluation report.

No changes were made to the Yucca Mountain Review Plan in response to this comment.

11.4 Public Participation

Issue 1: What is the public role in activities under the Nuclear Waste Policy Act related to Yucca Mountain?

Comment. Commenters identified approximately 20 questions about the nature and extent of public participation in a Yucca Mountain licensing proceeding and questioned whether the public participation process was valid. Some commenters asked about the extent of public participation in the process and others argued that public participation was required. One commenter stated expectations that NRC staff will adequately advertise public hearings in advance. Another commenter stated that all interactions between NRC and DOE should be in public meetings or by conference calls that include the public.

Other commenters urged that there be a continuing program of interaction, training, and progress reviews for the public and questioned whether the public has adequate access to the Yucca Mountain site.

Response. NRC staff has offered numerous opportunities for the public to stay informed about activities related to the proposed repository at Yucca Mountain. The extensive program of public involvement has included meetings in Nevada on the mission of NRC, the development of 10 CFR part 63, the review of DOE's draft environmental impact statement, and the development of the Yucca Mountain Review Plan. Formal periods of public comment were provided for development of 10 CFR part 63 and the Yucca Mountain Review Plan. NRC has had public interactions with DOE consistent with a prelicensing agreement and the Commission's Open Meeting Policy (59 FR 48340, September 20, 1994; 65 FR 56964, September 20, 2000), and the public has been given the opportunity to ask questions. Notice of public meetings with DOE is provided in advance and that practice will continue.

In addition, as required by NRC regulations in 10 CFR part 2, ''Rules of Practice for Domestic Licensing Proceedings and Issuance of Orders,'' an opportunity for a formal adjudicatory hearing will be provided on the license application for high-level waste repository at Yucca Mountain. Members of the public, including representatives of the State of Nevada, local counties, and Indian Tribes, may participate in a hearing on the application provided they are admitted as parties or interested governmental participants to the proceeding.

Substantial documentary material related to the license application will be available to the public and participants in the licensing proceeding via the Licensing Support Network, which is accessible over the Internet, as required by 10 CFR part 2, subpart J, ''Procedures Applicable to Proceedings for the Issuance of Licenses for the Receipt of High-Level Radioactive Waste at a Geologic Repository.''

If the Yucca Mountain Review Plan is revised or updated in the future, NRC will decide, depending on the nature and extent of the changes, whether to circulate it for public comment.

No changes were made to the Yucca Mountain Review Plan in response to these comments

Issue 2: What assistance will NRC staff provide to Native American Tribes with respect to the licensing of the potential high-level waste repository at Yucca Mountain?

Comment. A commenter stated that NRC staff was not interested in helping or working with members of Native American Tribes and asked that the hearing process be extended for 10–15 years to enable tribal members to prepare to participate in the proceeding.

Response. NRC recognizes the unique status of Native American Tribes. Consistent with the Nuclear Waste Policy Act, NRC regulations in 10 CFR part 63, subpart C, require that any ''affected Indian Tribe'' (a status conferred by the Department of the Interior) be kept informed concerning activities regarding the proposed repository and also provide opportunities for affected Indian Tribes to participate in the review of the license application under certain circumstances. Further, as noted in response to Issue 1, above, Indian Tribes may also seek permission to participate in the adjudicatory proceeding pursuant to 10 CFR part 2, subpart J.

As a general matter, representatives of Indian Tribes, as well as other members of the public, have been notified of public interactions concerning the proposed repository and have had access to the Yucca Mountain Review Plan and other documents related to the repository.

The requested, lengthy extension of the hearing process would be inconsistent with three- to four-year statutory deadline for a NRC decision on the construction authorization for the proposed repository.

No changes were made to the Yucca Mountain Review Plan in response to this comment.

11.5 U.S. Department of Energy Responsibilities

Issue 1: What are DOE's responsibilities at the proposed repository?

Comment. One commenter asked whether DOE would be allowed to transfer responsibilities and liabilities to corporate vendors.

Response. Under NRC regulations, the license applicant or licensee is responsible for safety and regulatory compliance with NRC regulations, even if some activities are performed by a contractor. Thus, DOE is responsible for ensuring that the proposed repository is constructed, and waste handling and disposal activities are conducted, in compliance with NRC requirements, NRC will conduct the necessary inspection and review activities to determine compliance with NRC regulations, and take action, as necessary, to enforce those requirements, including modifying, suspending or revoking any license issued, if warranted.

No changes to the Yucca Mountain Review Plan were made in response to this comment.

Issue 2: Who is financially responsible for the safe operation of a repository?

Comment. One commenter asked who would be financially responsible for limiting radioactive release from the repository. Another commenter expressed concern that the costs of cleaning up after an accident or sabotage would be astronomical and asked who would be responsible for these costs. Another commenter stated that there are no stewardship funds for Yucca Mountain.

Response. Federal statutes provide that DOE would be licensed by NRC, if appropriate, to construct and operate the high-level waste repository at Yucca Mountain. Thus, DOE, an agency of the Federal Government, would be financially responsible for ensuring that activities at the repository are conducted safely.

As the Commission stated in its ''Statement of Considerations'' for 10 CFR part 63 (66 FR 55771, November 2, 2001):

> Part 63 does not alter whatever liability the Federal Government may have for damage to

health or property caused by its activities. It is possible that compensation could be available for certain types of damage to health or property under Federal law, but it would be speculative to suggest that compensation would be available in any particular case.

No changes to the Yucca Mountain Review Plan were made in response to this comment.

Issue 3: How does DOE provide material control and accountability for nuclear materials at the Nevada Test Site?

Comment. One commenter asked about the material control and accounting by DOE at the Nevada Test Site.

Response. The Nevada Test Site is under DOE jurisdiction and is not regulated by NRC. The commenter should contact DOE for information regarding material control and accounting at the Nevada Test Site.

No changes were made to the Yucca Mountain Review Plan as a result of this comment.

Issue 4: Who is responsible for identifying structures, systems, and components important to safety?

Comment. One commenter expressed concern that the Yucca Mountain Review Plan directs that NRC staff should focus its review proportionally on high-risk-significant structures, systems, and components important to safety. The commenter argued that NRC, as the regulator, should not defer to DOE judgments as to which components are most important to safety, and should perform a separate analysis of what the Commission views as high-risk-significant structures, systems, and components important to safety.

Response. Regulations at 10 CFR 63.142(c)(1) require DOE to identify the structures, systems, and components to be covered by the quality assurance program. DOE must identify structures, systems, and components important to safety or to waste isolation and to assess their risk significance. NRC will evaluate whether DOE has adequately performed this identification and assessment.

Commensurate with implementation of risk-informed, performance-based regulation for a high-level waste repository, NRC staff would focus its review proportionately on those structures, systems, and components that are important.

NRC staff has developed an independent capability to conduct a preclosure safety analysis. Consistent with risk-informed, performance-based regulation, this independent capability will be focused on those structures, systems, and components important to health and safety.

No changes were made to the Yucca Mountain Review Plan as a result of this comment.

11.6 Role of the Licensing Support System Advisory Review Panel (Now the Licensing Support Network Advisory Review Panel)

Issue: What is the role of the Licensing Support Network Advisory Review Panel in the review of licensing issues?

Comment. One commenter asked whether the Licensing Support System Advisory Review Panel (now the Licensing Support Network Advisory Review Panel) will continue to perform a review role on licensing issues.

Response. Under 10 CFR 2.1011(e), the Licensing Support Network Advisory Review Panel provides advice to NRC on issues related to, among other things, the type of computer system necessary to access the Licensing Support Network, and computer format standards for providing electronic access to the documentary material made available via the Licensing Support Network, and procedures and formats for electronic transmission of filings and orders in the adjudicatory proceeding on the DOE application. The Licensing Support Network Advisory Review Panel basically provides advice on issues related to the means by which information about the proposed high-level waste repository will be made electronically available and has no role in the review of DOE's application.

No changes have been made to the Yucca Mountain Review Plan in response to this comment.

11.7 The U.S. Department of Energy Environmental Impact Statement

Issue: How will the Yucca Mountain Review Plan provide for review of a Yucca Mountain environmental impact statement?

Comment. Several commenters questioned whether the Yucca Mountain Review Plan adequately addressed review of the Yucca Mountain environmental impact statement.

Some commenters questioned the adequacy of the environmental impact statement in evaluating property values along the transportation routes, flooding analysis, environmental justice, cumulative effects, impacts on affected Native American Tribes (economic, cultural, and social) and responses to public comments on the environmental impact statement.

Other commenters recommended modification of the environmental impact statement to incorporate designs presented in the license application, the preparation of a Record of Decision, and any need to prepare a supplemental environmental impact statement.

Response. Comments regarding DOE's Final Environmental Impact Statement are not related to the Yucca Mountain Review Plan, which is a guidance document for NRC staff to use to conduct a review of whether the DOE license application, if submitted, satisfies NRC regulations in 10 CFR part 63.

Under Section 114 of the Nuclear Waste Policy Act, NRC (in connection with the issuance of a construction authorization and license for a repository) is required to adopt, to the extent practicable, any environmental impact statement prepared in connection with a repository. If the DOE submits an application, NRC staff would publish a notice of hearing in the **Federal Register** and state whether it is practicable to adopt DOE's environmental impact statement. The notice would provide a 30-day opportunity for parties and petitioners to file contentions regarding whether it is practicable to adopt the environmental impact statement. The presiding officer in the hearing would rule on any petition to intervene and, to the extent raised by an admitted contention, resolve disputes concerning NRC staff determination regarding adoption of the environmental impact statement. The decision of the presiding officer would be reviewable by the Commission.

The standards, set forth in 10 CFR 51.109(c), require that NRC find it practicable to adopt any environmental impact statement prepared by DOE unless: (1) The action proposed to be taken by the Commission differs from the action proposed in the DOE license application and this difference may significantly affect the quality of the human environment, or (2) Significant and substantial new information or new considerations render DOE's final environmental impact statement inadequate.

Unless either of the above criteria were met, NRC would find it practicable to adopt the environmental impact statement.

No changes were made to the Yucca Mountain Review Plan were made in response to these comments.

11.8 Transportation

Issue: Are transportation concerns, including protection of nuclear materials during transport, adequately addressed in the Yucca Mountain Review Plan?

Comments. Several commenters identified issues relating to U.S. Department of Transportation and NRC transportation regulations and the adequacy of DOE's Environmental Impact Statement in evaluating the transportation of storage casks to a geologic repository at Yucca Mountain.

A number of commenters also expressed concerns about physical protection and security during transport of nuclear materials from current storage locations to Yucca Mountain.

Response. The Yucca Mountain Review Plan is guidance for NRC staff in conducting a review of the license application submitted under 10 CFR part 63. Reviews of transportation of nuclear materials is addressed by other NRC guidance. Section 180 of the Nuclear Waste Policy Act, 42 U.S.C. 10175, requires DOE to use NRC-certified package designs to transport spent nuclear fuel and high-level waste to a permanent geologic repository. The design of casks that would be used by DOE to transport spent nuclear fuel to a proposed repository must be reviewed and approved by NRC in accordance with 10 CFR part 71. The applicable NRC review guidance is in NUREG–1617, the ''Standard Review Plan for Transportation Packages for Spent Nuclear Fuel.'' If and when DOE submits a design, or designs, for shipping casks, NRC would perform a safety review, and if the designs are found to comply with NRC regulations, then NRC would issue a Certificate of Compliance that is a license to use the cask(s) for shipping the specified fuel contents.

Review of transportation activities for Yucca Mountain will depend on whether they will be conducted by an NRC licensee other than DOE. If DOE takes custody of spent fuel at the site of an NRC licensee, DOE regulations would govern the security of spent fuel shipments. If an NRC licensee ships spent fuel to the geologic repository, 10 CFR part 71, 10 CFR part 73, and U.S. Department of Transportation regulations apply. The impacts of transportation to and from the facility have been evaluated in the DOE environmental impact statement that may be adopted by NRC under 10 CFR 51.109.

NRC's regulations for physical protection of the shipment of irradiated reactor fuel (*i.e.*, spent nuclear fuel) by NRC licensees are located in 10 CFR 73.37. Shipments made by NRC licensees to a future high-level waste repository would be subject to NRC security regulations. NRC staff would review the proposed routes for shipments. For shipments that are subject to NRC's authority, the regulations in 10 CFR 73.37 require licensees to develop and implement security procedures to meet performance objectives, including minimizing the possibilities for radiological sabotage. These procedures provide information on how licensees comply with NRC's spent nuclear fuel shipment physical protection requirements, including advance notification of each shipment to Governors, the establishment of redundant communication capability with the shipment vehicle, the arrangement of law enforcement contacts along the route, and provisions for armed escorts. Section 180 of the Nuclear Waste Policy Act requires DOE to abide by NRC's advance notifications to state and local governments associated with transporting spent fuel and high level waste.

For NRC-licensed shipments, NRC reviews and approves in advance the routes used for road and rail shipments of irradiated reactor fuel, with respect to physical protection requirements. The U.S. Department of Transportation regulations at 49 CFR part 397 establish the requirements for the designation of preferred routes for highway shipment of hazardous material (*e.g.*, spent nuclear fuel). A shipper must choose routes that meet U.S. Department of Transportation-specified criteria that are intended to minimize the risk of exposure of the public to radiation. There is no formal U.S. Department of Transportation route approval processes as long as routes are consistent with U.S. Department of Transportation guidelines. The U.S. Department of Transportation regulations set the standards for packaging, transporting, and handling radioactive materials (including labeling, shipping documents, placarding, loading, and unloading), and specify training that is required for personnel who handle and transport hazardous materials.

Since the events of September 11, 2001, NRC has taken actions to impose additional security requirements on shippers of spent nuclear fuel. In addition, NRC is sponsoring vulnerability studies to determine the potential effects on a cask subject to attack, by terrorists, beyond current regulatory assumptions, including the crash of a jumbo jet filled with fuel. NRC staff would use results of this study to determine if its security regulations should be modified.

No changes were made to the Yucca Mountain Review Plan in response to this comment.

11.9 Terrorism

Issue: Does the Yucca Mountain Review Plan adequately address terrorism and related acts?

Comment. One commenter questioned whether NRC staff was going to mandate ''mock attack'' drills on the Yucca Mountain site as a test of the physical protection system. Another commenter inquired whether NRC staff was going to consider protection from insider threats as well as the outsider threat to a repository. Other commenters questioned the perceived lack of security at nuclear facilities in the wake of the September 11, 2001, attacks and argued that the Yucca Mountain site would be a prime target for terrorists. A commenter asked that the schedule for the U.S. Nuclear Regulatory comprehensive review of physical security be placed in the Yucca Mountain Review Plan.

One commenter stated that the technical bases and assumptions for identifying initiating events need to include acts of terrorism, sabotage, and acts of war. The same commenter stated that for calculating Category 2 event sequences, sabotage in the repository, acts of war directed at the repository, sabotage in the operations area, acts of war in the operations area, accidental criticality, intentional criticality, dirty bombs, and permanent contamination of the operations area need to be considered.

Response. NRC staff has taken actions regarding security at NRC-licensed facilities in the wake of the September 11, 2001, attacks. Numerous security advisories have been issued to site security managers keeping them updated on the threat environment. NRC staff monitors the threat environment and shares information and analysis with other law enforcement and intelligence agencies. Compensatory Measures have been issued to NRC licensees outlining mandatory enhancements to physical protection in areas such as access control, physical barriers, detection, assessment, and response. The Compensatory Measures are designed to enhance and strengthen physical protection until the Commission-ordered comprehensive review of physical protection is complete.

The purpose of the Yucca Mountain Review Plan is to ensure the quality and uniformity of NRC staff licensing reviews under 10 CFR part 63. The NRC comprehensive review of safeguards and security is a separate activity. The NRC safeguards and security review encompasses all types of licensed facilities and includes information and

personnel security programs. Additionally, the review schedule may need to be modified based on the changing threat environment. NRC staff review of the physical protection aspects of a license application for a high-level waste repository at Yucca Mountain would be consistent with results from the comprehensive review.

Protection against terrorism and sabotage were discussed by the Commission in the ''Statement of Considerations'' for 10 CFR part 63 (66 FR 55771, November 2, 2001):

> As regards the potential risk of radiological sabotage to the repository during the preclosure phase of operations, the Commission's regulations for Yucca Mountain at Section 63.21(b)(3) require that licensees have in place adequate physical security plans and attendant procedures to protect against radiological sabotage, consistent with Section 73.51—NRC's requirements for the physical protection of stored spent nuclear fuel and high-level radioactive waste. In light of the terrorist attacks of September 11, 2001, the Commission has directed the staff to conduct a comprehensive reevaluation of NRC physical security requirements. If this effort indicates that NRC's regulations or requirements warrant revision, such changes would occur through a public rulemaking or other appropriate methods.

The physical security plan required by 10 CFR 63.21(b) and 10 CFR 73.51 would not be made publicly available, but would be reviewed to determine whether the regulatory requirements are met.

The technical bases and assumptions for identifying initiating events and evaluating Category 2 event sequences do not need to include acts of war. As the Commission stated in issuing 10 CFR part 63 (66 FR 55776, November 2, 2001), ''[c]onsideration of the effects of wars and military actions is beyond the scope of NRC's responsibility. NRC has not taken into account the effects of war in developing Part 63.''

Events such as criticality and contamination of the operations area are addressed in responses to other comments.

No changes were made to the Yucca Mountain Review Plan in response to this comment.

11.10 Editorial Comments

Issue: Will editorial corrections be made to the Yucca Mountain Review Plan?

Comment. Several commenters suggested editorial improvements to the Yucca Mountain Review Plan.

A partial list of these comments follows.

(1) Remove review plan Section 1, ''Introduction,'' and Section 2, ''Acceptance Review,'' from the front of the plan and include them as appendixes, to avoid detracting from the actual licensing review.

(2) Change the bullet and dash system to a numerical outline format similar to that in other NRC staff guidance documents.

(3) Clarify the language of Review Method 3 in Section 3.1, ''General Description,'' of the draft Yucca Mountain Review Plan, regarding the basis for the Commission's licensing authority.

(4) Make specific provisions in the Yucca Mountain Review Plan for evaluating information that is classified, such as the characteristics of naval fuel.

(5) Update the Yucca Mountain Review Plan to reflect the current status of activities under the Nuclear Waste Policy Act.

Response. NRC staff has incorporated those editorial comments that add clarity to the Yucca Mountain Review Plan.

Dated at Rockville, Maryland, this 23rd day of July 2003.

For the Nuclear Regulatory Commission.

Janet R. Schlueter,

Chief, High-Level Waste Branch, Division of Waste Management, Office of Nuclear Material Safety and Safeguards.

[FR Doc. 03–19321 Filed 7–30–03; 8:45 am]

BILLING CODE 7590–01–P

Federal Register

Thursday,
July 31, 2003

Part V

Environmental Protection Agency

40 CFR Part 68

Accidental Release Prevention Requirements: Risk Management Program Requirements Under Clean Air Act Section 112(r)(7); Amendments to the Submission Schedule and Data Requirements; Proposed Rule

ENVIRONMENTAL PROTECTION AGENCY

40 CFR Part 68

[OAR–2003–0044; FRL–7536–9]

RIN 2050–AF09

Accidental Release Prevention Requirements: Risk Management Program Requirements Under Clean Air Act Section 112(r)(7); Amendments to the Submission Schedule and Data Requirements

AGENCY: Environmental Protection Agency (EPA).

ACTION: Proposed rule.

SUMMARY: On June 20, 1996, EPA published risk management planning regulations mandated under the accidental release prevention provisions of the Clean Air Act (CAA). These regulations require owners and operators of stationary sources to submit risk management plans (RMPs) to be made available to federal, state and local emergency planning and response agencies and to the public though a central location. The first submissions were received in early 1999. EPA is now proposing to modify the re-submission schedule under the risk management program for sources who have significant accidents and for those who change the information for the emergency contacts. EPA is also proposing to add three data elements to the RMP, make several revisions to the submission format for the RMP, and remove the regulatory requirement to discuss the off-site consequence analysis in the executive summary of the RMP. EPA intends to issue a final rule addressing all of these proposed changes in time for the majority of facilities to complete their 5-year anniversary re-submissions by June 21, 2004. The modifications proposed today seek to improve the accident prevention and reporting programs of regulated sources, and to assist federal, state, and local RMP implementation in light of new homeland security concerns.

DATES: Comments must be submitted on or before September 15, 2003. If requested within 7 days from publication date, EPA will hold a public hearing on August 15, 2003 to discuss the modifications in this proposed rule. Consult the sources of information in **FOR FURTHER INFORMATION CONTACT** for the time and location of the hearing, if such hearing is requested.

ADDRESSES: Comments may be submitted by electronic mail (e-mail) to *a-and-r-Docket@epa.gov*, Attention Docket ID No. OAR–2003–0044. Submit comments by postal mail to: U.S. Environmental Protection Agency, EPA West (Air Docket), 1200 Pennsylvania Ave., NW., Room B108, Mail Code 6102T, Washington, DC 20460, Attention Docket ID No. OAR–2003–0044. Follow the detailed instructions, and find more options, provided in section I.C of the **SUPPLEMENTARY INFORMATION** section.

FOR FURTHER INFORMATION CONTACT: For general information, contact the Emergency Planning and Community Right-to-Know Hotline at (800) 424–9346; in the Washington, DC metropolitan area, contact (703) 412–9810. The Telecommunications Device for the Deaf (TDD) Hotline number is (800) 535–7672. You may also access general information online at the Hotline Internet site, *http://www.epa.gov/epaoswer/hotline/*. For questions on the contents of this notice contact Vanessa Rodriguez, Chemical Emergency Preparedness and Prevention Office, Mail Code 5104A, U.S. EPA, 1200 Pennsylvania Avenue, NW., Washington, DC 20004, (202) 564–7913, Fax (202) 564–8233, *rodriguez.vanessa@epa.gov*. You may also wish to visit the Chemical Emergency Preparedness and Prevention Office (CEPPO) Internet site at *http://www.epa.gov/ceppo*.

SUPPLEMENTARY INFORMATION:

I. General Information

A. What Are the Affected or Regulated Entities?

Entities potentially affected by this action are those stationary sources that are subject to the chemical accident prevention requirements at 40 CFR part 68. Affected categories and entities include:

CATEGORY EXAMPLES OF AFFECTED ENTITIES

Chemical Manufacturers	Basic chemical manufacturing, petrochemicals, resins, agricultural chemicals, pharmaceuticals, paints, cleaning compounds.
Petroleum	Refineries.
Other Manufacturing	Paper, electronics, semiconductors, fabricated metals, industrial machinery, food processors.
Agriculture	Agricultural retailers.
Public Sources	Drinking water and waste water treatment systems.
Utilities	Electric utilities.
Other	Cold storage, warehousing, and wholesalers.
Federal Sources	Military and energy installations.

This table is not intended to be exhaustive, but rather provides a guide for readers regarding entities likely to be affected by this action. This table lists the types of entities that EPA is now aware could potentially be affected by this action. Other types of entities not listed in the table could also be affected. To determine whether a stationary source is affected by this action, carefully examine the provisions associated with the list of substances and thresholds under 40 CFR 68.130 and the applicability criteria under § 68.10. If you have questions regarding the applicability of this action to a particular entity, consult the person listed in the preceding **FOR FURTHER INFORMATION CONTACT** section.

B. How Can I Get Copies of This Document and Other Related Information?

1. *Docket*. EPA has established an official public docket for this action under Docket ID No. OAR–2003–0044. The official public docket consists of the documents specifically referenced in this action, any public comments received, and other information related to this action. Although a part of the official docket, the public docket does not include Confidential Business Information (CBI) or other information whose disclosure is restricted by statute. The official public docket is the collection of materials that is available for public viewing at the Air Docket in the EPA Docket Center, (EPA/DC) EPA West, Room B102, 1301 Constitution Ave., NW., Washington, DC. The EPA Docket Center Public Reading Room is open from 8:30 a.m. to 4:30 p.m., Monday through Friday, excluding legal holidays. The telephone number for the Public Reading Room is (202) 566–1744, and the telephone number for the Air Docket is (202) 566–1742.

2. *Electronic Access*. You may access this **Federal Register** document electronically through the EPA Internet under the ''**Federal Register**'' listings at *http://www.epa.gov/fedrgstr/*.

An electronic version of the public docket is available through EPA's electronic public docket and comment system, EPA Dockets. You may use EPA Dockets at *http://www.epa.gov/edocket* to submit or view public comments, access the index listing of the contents of the official public docket, and to access those documents in the public docket that are available electronically. Once in the system, select ''search,'' then key in the appropriate docket identification number.

Certain types of information will not be placed in the EPA Dockets. Information claimed as CBI and other information whose disclosure is restricted by statute, which is not included in the official public docket, will not be available for public viewing in EPA's electronic public docket. EPA's policy is that copyrighted material will not be placed in EPA's electronic public docket but will be available only in printed, paper form in the official public docket. To the extent feasible, publicly available docket materials will be made available in EPA's electronic public docket. When a document is selected from the index list in EPA Dockets, the system will identify whether the document is available for viewing in EPA's electronic public docket. Although not all docket materials may be available electronically, you may still access any of the publicly available docket materials through the docket facility identified in section I.B.

For public commenters, it is important to note that EPA's policy is that public comments, whether submitted electronically or in paper, will be made available for public viewing in EPA's electronic public docket as EPA receives them and without change, unless the comment contains copyrighted material, CBI, or other information whose disclosure is restricted by statute. When EPA identifies a comment containing copyrighted material, EPA will provide a reference to that material in the version of the comment that is placed in EPA's electronic public docket. The entire printed comment, including the copyrighted material, will be available in the public docket.

Public comments submitted on computer disks that are mailed or delivered to the docket will be transferred to EPA's electronic public docket. Public comments that are mailed or delivered to the Docket will be scanned and placed in EPA's electronic public docket. Where practical, physical objects will be photographed, and the photograph will be placed in EPA's electronic public docket along with a brief description written by the docket staff.

For additional information about EPA's electronic public docket visit EPA Dockets online or see 67 FR 38102, May 31, 2002.

C. How and to Whom Do I Submit Comments?

You may submit comments electronically, by mail, by facsimile, or through hand delivery/courier. To ensure proper receipt by EPA, identify the appropriate docket identification number in the subject line on the first page of your comment. Please ensure that your comments are submitted within the specified comment period. Comments received after the close of the comment period will be marked ''late.'' EPA is not required to consider these late comments. If you wish to submit CBI or information that is otherwise protected by statute, please follow the instructions in section I.D. Do not use EPA Dockets (EPA's electronic public docket and comment system) or e-mail to submit CBI or information protected by statute.

1. *Electronically*. If you submit an electronic comment as prescribed below, EPA recommends that you include your name, mailing address, and an e-mail address or other contact information in the body of your comment. Also include this contact information on the outside of any disk or CD ROM you submit, and in any cover letter accompanying the disk or CD ROM. This ensures that you can be identified as the submitter of the comment and allows EPA to contact you in case EPA cannot read your comment due to technical difficulties or needs further information on the substance of your comment. EPA's policy is that EPA will not edit your comment, and any identifying or contact information provided in the body of a comment will be included as part of the comment that is placed in the official public docket, and made available in EPA's electronic public docket. If EPA cannot read your comment due to technical difficulties and cannot contact you for clarification, EPA may not be able to consider your comment.

i. *EPA Dockets*. Your use of EPA's electronic public docket to submit comments to EPA electronically is EPA's preferred method for receiving comments. Go directly to EPA Dockets at *http://www.epa.gov/edocket* and follow the online instructions for submitting comments. To access EPA's electronic public docket from the EPA Internet Home Page, select ''Information Sources,'' ''Dockets,'' and ''EPA Dockets.'' Once in the system, select ''search,'' and then key in Docket ID No. OAR–2003–0044. The system is an ''anonymous access'' system, which means EPA will not know your identity, e-mail address, or other contact information unless you provide it in the body of your comment.

ii. *E-mail*. Comments may be sent by electronic mail (e-mail) to *a-and-r-Docket@epa.gov*, Attention Docket ID No. OAR–2003–0044. In contrast to EPA's electronic public docket, EPA's e-mail system is not an ''anonymous access'' system. If you send an e-mail comment directly to the Docket without going through EPA's electronic public docket, EPA's e-mail system automatically captures your e-mail address. E-mail addresses that are automatically captured by EPA's e-mail system are included as part of the comment that is placed in the official public docket, and made available in EPA's electronic public docket.

iii. *Disk or CD ROM*. You may submit comments on a disk or CD ROM that you mail to the mailing address identified in section I.C.2. These electronic submissions will be accepted in WordPerfect or ASCII file format. Avoid the use of special characters and any form of encryption.

2. *By Mail*. When mailing comments through the U.S. Postal Service, send 2 copies of your comments to: U.S. Environmental Protection Agency, EPA West (Air Docket), 1200 Pennsylvania Ave., NW., Room: B108, Mail Code 6102T, Washington, DC 20460, Attention Docket ID No. OAR–2003–0044.

3. *By Hand Delivery or Courier*. When mailing comments through Federal Express, UPS, or other courier services, deliver 2 copies of your comments to: EPA Docket Center (Air Docket), U.S. Environmental Protection Agency, 1301 Constitution Avenue, NW., Room: B108, Mail Code 6102T, Washington, DC 20004, Attention Docket ID No. OAR–2003–0044. Such deliveries are only accepted during the Docket's normal hours of operation as identified in Unit I.B.

4. *By Facsimile*. Fax your comments to: 202–566–1741, Attention Docket ID. No. OAR–2003–0044.

D. How Should I Submit CBI to the Agency?

Do not submit information that you consider to be CBI electronically through EPA's electronic public docket or by e-mail. Send or deliver information identified as CBI only to the

following address: Dorothy Mcmanus, Mail Code 5104A, U.S. EPA, 1200 Pennsylvania Avenue. NW., Washington, DC 20460, Attention Docket ID No. OAR–2003–0044. You may claim information that you submit to EPA as CBI by marking any part or all of that information as CBI (if you submit CBI on disk or CD ROM, mark the outside of the disk or CD ROM as CBI and then identify electronically within the disk or CD ROM the specific information that is CBI). Information so marked will not be disclosed except in accordance with procedures set forth in 40 CFR part 2.

In addition to one complete version of the comment that includes any information claimed as CBI, a copy of the comment that does not contain the information claimed as CBI must be submitted for inclusion in the public docket and EPA's electronic public docket. If you submit the copy that does not contain CBI on disk or CD ROM, mark the outside of the disk or CD ROM clearly that it does not contain CBI. Information not marked as CBI will be included in the public docket and EPA's electronic public docket without prior notice. If you have any questions about CBI or the procedures for claiming CBI, please consult the person identified in the **FOR FURTHER INFORMATION CONTACT** section.

E. What Should I Consider as I Prepare My Comments for EPA?

You may find the following suggestions helpful for preparing your comments:

1. Explain your views as clearly as possible.
2. Describe any assumptions that you used.
3. Provide any technical information and/or data you used that support your views.
4. If you estimate potential burden or costs, explain how you arrived at your estimate.
5. Provide specific examples to illustrate your concerns.
6. Offer alternatives.
7. Make sure to submit your comments by the comment period deadline identified.
8. To ensure proper receipt by EPA, identify the appropriate docket identification number in the subject line on the first page of your response. It would also be helpful if you provided the name, date, and **Federal Register** citation related to your comments.

The information in this proposed rule is organized as follows:

I. Introduction
A. Statutory Authority
B. Background
II. Discussion of Proposed Changes
A. Changes to Reporting Schedule
1. Five-Year Accident History
2. Emergency Contact Information
B. Changes to Executive Summary
C. New Data Elements
1. Emergency Contacts E-mail Address
2. Reason for Subsequent RMP Submissions
3. Contractor Information
D. Revisions to RMP Submit Format
Uncontrolled/Runaway Reactions
III. Other Issues
IV. Statutory and Executive Order Reviews
A. Executive Order 12866: Regulatory Planning and Review
B. Paperwork Reduction Act
C. Regulatory Flexibility Act
D. Unfunded Mandates Reform Act
E. Executive Order 13132: Federalism
F. Executive Order 13175: Consultation and Coordination with Indian Tribal Governments
G. Executive Order 13045: Protection of Children from Environmental Health and Safety Risks
H. Executive Order 13211: Actions that Significantly Affect Energy Supply, Distribution, or Use
I. National Technology Transfer and Advancement Act

I. Introduction

A. Statutory Authority

This notice of proposed rulemaking (NPRM) is being issued under section 112(r) of the Clean Air Act (CAA or Act) as amended (42 U.S.C. 7412, 7601).

B. Background

The 1990 CAA Amendments added, among other things, section 112(r) to provide for the prevention and mitigation of accidental releases of extremely hazardous substances. Section 112(r) calls for EPA to list the most dangerous substances and a threshold quantity for each substance. It also directs EPA to issue regulations requiring any stationary source with more than a threshold quantity of a listed substance to develop and implement a risk management program. EPA published a final rule creating the list of regulated substances and establishing thresholds on January 31, 1994 (59 FR 4478) (the ''List Rule''), and a final rule establishing the accidental release prevention regulations on June 20, 1996 (61 FR 31668) (the risk management program regulations or ''RMP Rule''). Together, these two rules are codified as part 68 of title 40 of the Code of Federal Regulations (40 CFR part 68).

Sources subject to the RMP rule are required to develop and implement a risk management program that includes, for covered processes, a five-year accident history, an offsite consequence analysis, a prevention program, and an emergency response program. Sources must also submit to EPA a risk management plan (RMP) describing the source's risk management program. The deadline for submitting RMPs was June 21, 1999, for sources subject to the program by that date. Approximately 15,000 sources have submitted RMPs.

The RMP rule requires sources to update and re-submit their RMPs at least every five years or sooner if any of the changes specified in section 68.190(b)(2) of the rule occur. The specified changes currently include the following conditions: (1) No later than three years after the date on which a regulated substance is first listed under § 68.130, (2) no later than the date on which a new regulated substance is first present in an already covered process above a threshold quantity, (3) no later than the date on which a regulated substance is first present above a threshold quantity in a new process, (4) within 6 months of a change that requires a revised PHA or hazard review, (5) within 6 months of a change that requires a revised off-site consequence analysis as provided in § 68.36, and (6) within six months of a change that alters the Program level that applied to any covered process. Updates and re-submissions entail the review and revision of all sections of the RMP as needed to bring the RMP up to date. They must be accompanied by a new certification letter for the entire RMP. If a source re-submits its RMP for any of the aforementioned reasons, the five-year anniversary date for resubmitting the RMP is reset.

Sources may wish to revise their RMPs for other reasons, as well. The Agency distinguishes among the re-submissions discussed above and other various types of revisions, namely corrections, de-registrations (revised registrations) and withdrawals. A correction is a change only to individual data elements that a source wishes to change or correct, and requires a new certification letter covering that change. Corrections may be required if the implementing agency or the reporting center discovers the submission was incomplete based on a validation/error report. The source may initiate a correction if it discovers an error, needs to make minor administrative changes (*e.g.*, correction of a phone number or contact name), or changes owners but covered process operations do not change. Corrections do not entail the review and revision of all nine sections of the RMP, nor do they affect the five-year anniversary date for updating and resubmitting the RMP.

De-registrations (or revised registrations as these are referred to in

section 68.190(c)) occur when the source is no longer covered by the program (*e.g.*, the source no longer uses any regulated substances or no longer holds regulated substances in amounts that exceed the threshold quantities). The source submits a letter requesting de-registration, with the RMP being retained in the reporting system database for 15 years.

A withdrawal occurs when a source that was never subject to the program submits an RMP in error. Such a source submits a letter requesting a withdrawal, and its RMP is taken out of the reporting system database altogether.

Sources subject to the rule on June 21, 1999, were required to submit an RMP by that date. For those sources that submitted an RMP on June 21, 1999, their five-year anniversary date will be June 21, 2004. Other sources that submitted an RMP before the original deadline, have re-submitted an RMP since, or have become subject to the RMP rule since June 21, 1999, will have different anniversary dates.

II. Discussion of Proposed Changes

A. Changes to RMP Submission Requirements

1. Five-Year Accident History

EPA proposes that facilities who have an accident that meets the criteria for the five-year accident history be required to update and re-submit their RMP within six months of the date of the accident.

The five-year accident history element for the RMP (40 CFR 68.42) requires the owner or operator of a stationary source to record information in their RMP on all accidental releases from covered processes in the past five years that resulted in deaths, injuries, or significant property damage on site, or known offsite deaths, injuries, evacuations, sheltering in place, property damage, or environmental damage. This requirement includes the release of any chemical from a covered process, not just the release of a regulated substance from that covered process. During the first year of RMP submissions, approximately 1,150 sources reported in their five-year history that their facility had an accidental release that met the criteria for including information on these releases in their RMP.

The regulations require that each time a source re-submits its RMP, the five-year accident history is updated. Information on accidental releases in the previous RMP submission that are now outside the five-year time frame is removed while information on recent accidental releases is added. However, unless a source re-submits its RMP sooner than the five-year anniversary date, information on more recent accidental releases will not be submitted in an RMP for potentially 5 years. The five-year accident history is valuable information for chemical accident prevention and preparedness efforts by not only industry but by many stakeholders, including emergency responders. Consequently, EPA is proposing to require that sources update and re-submit their RMP within six months of an accidental release that meets the five-year accident history reporting criteria.

EPA believes this proposed requirement would help spur significant improvements in the accident prevention and reporting programs of sources at which reportable releases occur. Accidents can be caused by failures in a source's accident prevention program. This new re-submission trigger would require the source to review its accident prevention program in light of the accident, and to update its RMP with any changes to the program. While all physical or procedural improvements may not be finished and completely implemented within the 6-month accident reporting deadline, the Agency believes that review of the process hazard analysis and other elements of the program can be completed within six months. The Agency also believes that sources would benefit greatly from the prompt scrutiny of the accident, allowing the findings of an accident investigation to better influence any safety recommendations.

EPA also believes the proposed requirement would have the additional benefit of improving reporting of accidental releases. By providing the details of the accident soon after the accident takes place, the source would be likely to provide more complete and accurate information in its accident reporting. Current requirements allow sources to compile an accident report for the RMP up to 5 years after the accident occurs.

The proposed submission requirement would also allow EPA and interested stakeholders to determine on an annual basis if the rate of accidents is increasing or decreasing, rather than waiting five years to see such data. It would also enable all involved in chemical accident prevention to identify trends in accident causes, examine if there are problem areas or a need for assistance in specific industry sectors, and identify effective prevention measures that could be shared so that other sources may avoid similar accidents.

This change would modify the schedule for updating and re-submitting an RMP, but it should not significantly change the associated burden. If a source had a reportable accident, it would need to update and re-submit an RMP within 6 months. However, the source would not need to resubmit again, provided there are no other accidents or major changes, for another 5 years.

An alternative that was also considered would require sources with new accidents that meet the criteria for reporting in the 5-year accident history to update their RMP on a fixed date every year. This option would have the Agency receiving RMPs at the same time from all of the sources who have had accidents that meet the criteria during the previous 12 months. This option would provide EPA with an annual report of all of the significant accidents that have occurred at reporting sources, and the changes that were made due to these accidents. EPA is not proposing this option at this time, because the Agency prefers to give the same amount of time for reporting (six months) to all sources. For example, if the fixed date for annual accident reporting was established as June 21, a source having an accident on June 15 would have no time to significantly investigate the accident and provide a meaningful report. Nonetheless, EPA is requesting comment on this option and whether it is preferable to requiring the re-submissions within six months of a significant accident.

2. Emergency Contact Information

EPA proposes to require that facilities correct their emergency contact information within one month of a change in the information.

The RMP has become a primary source of information for the federal government's efforts in the homeland security area. The emergency contact information is important not only to state and local responders, but also for the federal government. Under current requirements, if the information for the emergency contact becomes outdated (*e.g.*, change of emergency contact's phone number, emergency contact leaves the position, etc.), the source may take up to five years to report these changes. Implementing agencies that have audited RMPs report that much of the information for emergency contacts is outdated or otherwise inaccurate. For these reasons, EPA is proposing to require that facilities correct their emergency contact information within one month of a change in the information. Explained in the following section in detail is also a proposal for an

additional email address data element; this would also trigger the requirement to correct emergency information within one month of a change. These changes to emergency contact information would be considered corrections and would not require a complete updating and re-submission of the RMP. EPA requests comment on this proposal.

B. Changes to Executive Summary

EPA proposes to remove the requirement for sources to briefly describe the off-site consequence analysis (i.e, worst-case accidental release scenario(s) and the alternative accidental release scenario(s) within the executive summary of the RMP.

Section 112(r)(7) of the Clean Air Act requires sources subject to the risk management program requirements to conduct an off-site consequence analysis (OCA) for one or more hypothetical accidental worst case and alternative release scenarios and report the results of the analysis in the RMP. In 1999, Congress passed the Chemical Safety Information, Site Security and Fuels Regulatory Relief Act (CSISSFRRA), governing the distribution of ''off-site consequence [OCA] information.'' The statute defines ''OCA information'' as the OCA sections of the RMP (sections 2 through 5) and any EPA database derived from those sections, but expressly excludes the executive summary section of the RMP. Under CSISSFRRA, EPA and the Department of Justice jointly issued regulations restricting access to OCA information and certain related information. This regulation (40 CFR part 1400) was published in the **Federal Register** on August 4, 2000 (65 FR 48108).

Promulgated prior to the passage of CSISSFRRA, § 68.155(c) of the RMP rule currently requires sources to briefly describe in their RMP executive summary ''the worst-case release scenario(s) and the alternative release scenario(s), including administrative controls and mitigation measures to limit the distances for each reported scenario.'' EPA, along with federal law enforcement agencies, believes that due to its sensitive nature, this information should not be included in executive summaries, which are available to the public without restriction under 40 CFR part 1400. For this reason, EPA is proposing to remove the requirement to summarize OCA results, and requests that sources not voluntarily provide this specific information, in the executive summary. Facilities must continue to provide details of the OCA in sections 2 through 5 of the RMP. The public would continue to have restricted access to OCA information in the manner required by the regulations at 40 CFR part 1400. EPA requests comment on this proposed change.

C. New Data Elements

1. Emergency Contacts E-Mail Address

EPA proposes to add a mandatory data element to the RMP for sources to provide the e-mail address (if any) for the emergency contact.

Section 68.160(b)(6) of the RMP rule currently requires facilities to provide the name, title, telephone number, and a 24-hour telephone number of an emergency contact person. Similarly, § 68.160(b)(14) allows facilities to optionally provide an e-mail address for the source or parent company. From time to time, EPA is made aware of specific hazards. For example, in the Hazardous Materials Accident Report: Hazardous Materials Release From Railroad Tank Car With Subsequent Fire at Riverview, Michigan, July 14, 2001, the National Transportation Safety Board (NTSB) included the following recommendation:

> ''[EPA should] notify all facilities that are required to submit risk management plans to the Environmental Protection Agency that tank car excess flow valves cannot be relied upon to stop leaks that occur during tank car loading and unloading operations and that those companies that have included reliance on such valves in their risk management plans should instead identify and implement other measures that will stop the uncontrolled release of product in the event of a transfer line failure during tank car loading or unloading.'' (NTSB, R–02–17)

Having an e-mail address for the emergency contact would allow the Agency to quickly and directly communicate hazard information such as that provided above by the NTSB. Providing such notifications in a timely manner to all sources subject to RMP requirements would improve sources access to critical process safety information.

Additionally, RMPs have become a critical source of information for the federal government's homeland security efforts. In our new environment of heightened security, it may become necessary for an RMP implementing agency to communicate directly and on short notice with sources subject to the RMP program, or with a portion of that universe. The e-mail address for a source's emergency contact would be a necessary piece of information for this to occur.

As noted above, EPA is also proposing that any change to the email address for a source's emergency contact be followed by a corresponding change to the source's RMP within a month of the address change. This requirement would trigger a correction; a re-submission would not be required for this particular change. The Agency requests comments on this proposal and also on the extent to which sources may not have an e-mail address. Some sources, such as small agricultural retailers or fertilizer warehouses, may not have e-mail capability.

2. Reason for Subsequent RMP Submissions

EPA is proposing to add a mandatory data element to the RMP for sources to identify the purpose of submissions that revise or otherwise affect their previously filed RMPs.

As noted above, sources are required to submit, update and resubmit their RMP by the schedule specified in section 68.190 of the RMP rule. Since the initial June 1999 reporting deadline, EPA has received thousands of submissions containing corrections, re-submissions, de-registrations (revised registrations) or withdrawals of previously submitted RMPs. However, at this time the RMP electronic submission program does not have an entry that provides the reason for the submission, making it difficult at times for RMP implementing agencies to determine their purpose.

This proposal would add a new data element in the RMP for sources to indicate what they are submitting and why. For example, a source that modifies its RMP to correct minor technical errors, make minor administrative changes (*i.e.*, updates to contact names, addresses, telephone numbers, e-mail addresses), fill in missing data elements, or reflect facility ownership changes, would indicate that it was making such a correction. Similarly, a source that revised the RMP for its update and re-submission as required every five years or when certain changes are made, such as introducing a regulated substance in a process, would indicate that it was sending an RMP re-submission and why. A source that was previously required to submit an RMP, but due to changes in operations was no longer required to report, would indicate why it was submitting a de-registration (revised registration) of the chemical or process. Sources that had originally submitted an RMP in error (*i.e.* they were never subject to RMP regulation) would indicate why they were withdrawing their RMP from the national database. To help sources provide this information, we would anticipate adding to the RMP electronic submission program a pop-up menu of typical reasons for submissions. Sources

would simply click on the appropriate menu item or, if none is appropriate, briefly state the reason for the change.

This additional reporting element is intended to assist the Agency and other implementing agencies in understanding the reason a source is submitting a revised RMP or asking to remove an existing one. This information would also provide a check on the RMP submission to ensure that information is provided accurately. Further, this proposed reporting requirement would provide important information on changes occurring in industry, providing insight into chemical usage and process safety management. For example, monitoring the number of sources de-registering their RMPs because they have substituted the regulated substance for a non-regulated substance, or decreasing the quantity of a regulated substance in a process, would provide some indication of the extent to which inherently safer or alternative technologies are being utilized by the sources subject to the RMP. This information would be of interest to sources that could learn from identified trends and industry practices in the area of chemical process safety management. The Agency is requesting comments on this proposal.

The Agency also recognizes that the terminology used to identify the various types of submissions may cause some confusion, and is requesting comments that may help clarify those terms. Specifically, the Agency is considering changing the term revised registrations to de-registrations, which more clearly conveys the action being taken and is the term used in the implementation materials for the RMP.

3. Contractor Information

EPA is proposing to add a mandatory data element in the RMP for sources that use a contractor to help prepare their RMPs to so indicate.

Through RMP audits, implementing agencies have learned that many RMPs have been prepared in large part by contractors. Use of contractors for this purpose is allowed under the RMP rule. However, some implementing agencies have noted potential systemic errors in the way some contractors prepare RMPs. Concern has also been raised that, in some cases, sources whose RMPs are largely prepared by contractors are not sufficiently familiar with the contents of their RMPs. EPA is proposing to require an additional data element in the RMP for sources who use a contractor to help develop and fill out the RMP. Those sources would be required to provide the name of the contractor who helped prepare the RMP and a phone number to contact the contractor.

This new data would allow the implementing agencies to monitor the use of contractors for RMP preparation and provide appropriate follow-up. For example, RMP auditors could use the information to more easily identify systemic errors linked to a particular contractor, and could then share this information with the source submitting the RMP, thus improving the overall quality of the sources' safety management programs. Ultimate responsibility for RMP implementation would continue to reside on the stationary source's owner or operator. EPA requests comments on this new requirement.

D. Revisions to RMP Submit Format

Uncontrolled/Runaway Reactions

EPA is proposing to expand the list of possible causes of accidental releases to the reporting of sources' five-year accident history so an owner or operator can indicate whether an accident involved an uncontrolled/runaway reaction.

In its report, Improving Reactive Hazard Management (December 2002), the U.S. Chemical Safety and Hazard Investigation Board (CSB) recommended that EPA ''[m]odify the accident reporting requirements in RMP*Info to define and record reactive incidents. Consider adding the term 'reactive incident' to the four existing 'release events' in EPA's current 5-year accident reporting requirements (Gas Release, Liquid Spill/Evaporation, Fire, and Explosion). Structure this information collection to allow EPA and its stakeholders to identify and focus resources on industry sectors that experienced the incidents; chemicals and processes involved; and impact on the public, the workforce, and the environment'' (CSB recommendation 2001–01–H–R4).

Based on this recommendation, EPA is proposing to revise RMP reporting of the five-year accident history (40 CFR 68.42) to allow the owner or operator to indicate whether the accident involved an uncontrolled/runaway reaction.

The new element would provide sources with an additional choice to more accurately report accidents that involved uncontrolled or runaway reactions. This information is important when measuring whether the accidents involved simple releases of the chemical (*e.g.*, broken valve, broken pipe) or were the result of a process upset. This new information would provide a better understanding of the types of accidents occurring at regulated sources.

III. Other Issues

Collection of OSHA Occupational Injury and Illness Data in Conjunction With the RMP Filing Required Under 112(r) of the CAA

EPA and others use the information reported in the RMP accident history in combination with other data to better understand accident risks and to gauge the trends with respect to risk and accident prevention across various industry sectors. Health and safety indicators could also provide information to industry, government, and other researchers in understanding the factors that affect chemical accident prevention. Under 29 CFR part 1904, the Occupational Safety and Health Administration (OSHA) requires employers to maintain logs of employee reportable injury and illness statistics (OII) for every calendar year. Employers need to have these records available for compliance officers to review upon inspections, and the records for each year must be kept for 5 years.

Three of these records are of special interest to EPA: (1) Total Incidence Rate, (2) Workdays Lost to Injuries, and (3) Illness and Workdays under Restricted Duties. EPA is considering whether future RMP submissions should be required to include data for these three records, aggregated for five most recent calendar years. With renewed emphasis on quantifying the risks and benefits related to chemical accidents, and on the trends in key sectors covered by existing regulations, these data, if collected, would allow an objective analysis of any statistical relationship between levels of reported injuries and illnesses, accidental releases and a variety of other elements driving chemical industry preparedness and prevention activities. The ability to link to injury and illness data and the indicators they provide on health and safety at chemical facilities could provide extremely valuable information both to EPA and to industry for understanding the factors that underlie chemical process safety. Given that RMPs are submitted by a large number of chemical facilities, providing OSHA OII data in RMPs would greatly facilitate analysis of trends in the U.S. chemical industry on accidental releases and the relationship of these, if any, to facility safety levels.

RMP submitters could provide the aggregate statistics requested with only minimal additional effort in filling out the RMP. For the government to obtain this data by other means would require significant effort. The Bureau of Labor Statistics (BLS) only collects this data from a representative sample of

companies/facilities and not from the entire set of facilities covered under RMP; linking BLS data to the RMP records outside of the RMP data collection would require a significant expenditure of time and resources even though it would lack a complete data set. EPA would expect little additional burden on industry for the collection of this information since OSHA already requires that it be maintained. EPA is requesting comments on the practicability and burden of adding these data elements to RMP reporting requirements, and on the potential value they may yield. EPA is also requesting comments with respect to other data elements that may serve this purpose.

IV. Statutory and Executive Order Reviews

A. Executive Order 12866: Regulatory Planning and Review

Under Executive Order 12866, (58 FR 51735 (October 4, 1993)), the Agency must determine whether the regulatory action is ''significant'' and therefore subject to OMB review and the requirements of the Executive Order. The Order defines ''significant regulatory action'' as one that is likely to result in a rule that may: (1) Have an annual effect on the economy of $100 million or more or adversely affect in a material way the economy, a sector of the economy, productivity, competition, jobs, the environment, public health or safety, or State, local, or tribal governments or communities; (2) create a serious inconsistency or otherwise interfere with an action taken or planned by another agency; (3) materially alter the budgetary impact of entitlements, grants, user fees, or loan programs or the rights and obligations of recipients thereof; or (4) raise novel legal or policy issues arising out of legal mandates, the President's priorities, or the principles set forth in the Executive Order.'' It has been determined that this proposal is not considered to be a ''significant regulatory action'' within the meaning of the Executive Order and is therefore not subject to OMB review.

B. Paperwork Reduction Act

The information collection requirements in this proposed rule have been submitted for approval to the Office of Management and Budget (OMB) under the *Paperwork Reduction Act,* 44 U.S.C. 3501 *et seq.* The Information Collection Request (ICR) document prepared by EPA has been assigned EPA ICR number 1656.10.

EPA is proposing to add three data elements to the Risk Management Plan (RMP), to modify one data element, and to remove the obligation to discuss the off-site consequence analysis in the executive summary of the RMP. EPA is also proposing to modify the submission schedule under the risk management program for sources who have significant accidents, and for those who change the information for the emergency contacts. This action may increase some burden on facilities that currently submit risk management plans to EPA.

The most recently recorded number of sources subject to this proposed action, if adopted, is 14,930. The public reporting burden estimated for familiarizing with this rule amendment is 2.0 hours for each source. Estimated unit burden for the new RMP data elements is 0.25 hours. The burden for change in submission schedule for RMP due to significant accidents ranges from 3.0 hours for wholesale to 9.0 hours for large chemical manufacturers. The burden for change in submission schedule for RMP due to change in emergency contact information is 0.1 hour for each source.

The total annual burden for rule familiarization, addition of new elements to the RMP, and for the change in RMP submission schedule is 33,943 hours (101,829 hours for 3 years), with an annual cost of $992,400 ($2,977,200 for 3 years).

Burden means the total time, effort, or financial resources expended by persons to generate, maintain, retain, or disclose or provide information to or for a Federal agency. This includes the time needed to review instructions; develop, acquire, install, and utilize technology and systems for the purposes of collecting, validating, and verifying information, processing and maintaining information, and disclosing and providing information; adjust the existing ways to comply with any previously applicable instructions and requirements; train personnel to be able to respond to a collection of information; search data sources; complete and review the collection of information; and transmit or otherwise disclose the information.

An Agency may not conduct or sponsor, and a person is not required to respond to a collection of information unless it displays a currently valid OMB control number. The OMB control numbers for EPA's regulations are listed in 40 CFR part 9 and 48 CFR chapter 15.

To comment on the Agency's need for this information, the accuracy of the provided burden estimates, and any suggested methods for minimizing respondent burden, including the use of automated collection techniques, EPA has established a public docket for this ICR under Docket ID number OAR–2003–0052. The public docket is available for viewing at the Air Docket in the EPA Docket Center (EPA/DC), EPA West, Room B102, 1301 Constitution Ave., NW, Washington, DC. The EPA Docket Center Public Reading Room is open from 8:30 a.m. to 4:30 p.m., Monday through Friday, excluding legal holidays. The telephone number for the Reading Room is (202) 566–1744, and the telephone number for the Air Docket is (202) 566-1742. An electronic version of the public docket is available through EPA Dockets (EDOCKET) at *http://www.epa.gov/edocket.* Use EDOCKET to submit or view public comments, access the index listing of the contents of the public docket, and to access those documents in the public docket that are available electronically. Once in the system, select ''search,'' then key in the docket ID number OAR–2003–0052. Also, you can send comments to the Office of Information and Regulatory Affairs, Office of Management and Budget, 725 17th Street, NW, Washington, DC 20503, Attention: Desk Office for EPA. Since OMB is required to make a decision concerning the ICR between 30 and 60 days after July 31, 2003, a comment to OMB is best assured of having its full effect if OMB receives it by September 2, 2003. The final rule will respond to any OMB or public comments on the information collection requirements contained in this proposal.

C. Regulatory Flexibility Act

The Regulatory Flexibility Act (RFA), as amended by the Small Business Regulatory Enforcement Fairness Act of 1996 (SBREFA), 5 U.S.C. 601 *et. seq,* generally requires an agency to prepare a regulatory flexibility analysis of any rule subject to notice and comment rulemaking requirements under the Administrative Procedure Act or any other statute unless the agency certifies that the rule will not have a significant economic impact on a substantial number of small entities. Small entities include small businesses, small organizations, and small governmental jurisdictions.

For purposes of assessing the impacts of today's rule on small entities, a small entity is defined as: (1) A small business that is defined by the Small Business Administration by category of business using North American Industrial Classification System (NAICS) and codified at 13 CFR 121.201; (2) a small governmental jurisdiction that is a government of a city, county, town, school district or special district with a population of less than 50,000; and (3) a small organization that is any not-for-

profit enterprise which is independently owned and operated and is not dominant in its field.

After considering the economic impacts of today's proposed rule on small entities, we have concluded that this action would not have a significant economic impact on a substantial number of small entities.

D. Unfunded Mandates Reform Act

Title II of the Unfunded Mandates Reform Act of 1995 (UMRA), Public Law 104–4, establishes requirements for Federal agencies to assess the effects of their regulatory actions on State, local, and tribal governments and the private sector. Under section 202 of the UMRA, EPA generally must prepare a written statement, including a cost-benefit analysis, for proposed and final rules with ''Federal mandates'' that may result in expenditures to State, local, and tribal governments, in the aggregate, or to the private sector, of $100 million or more in any one year. Before promulgating an EPA rule for which a written statement is needed, section 205 of the UMRA generally requires EPA to identify and consider a reasonable number of regulatory alternatives and adopt the least costly, most cost-effective or least burdensome alternative that achieves the objectives of the rule. The provisions of section 205 do not apply when they are inconsistent with applicable law. Moreover, section 205 allows EPA to adopt an alternative other than the least costly, most cost-effective or least burdensome alternative if the Administrator publishes with the final rule an explanation why that alternative was not adopted. Before EPA establishes any regulatory requirements that may significantly or uniquely affect small governments, including tribal governments, it must have developed under section 203 of the UMRA a small government agency plan. The plan must provide for notifying potentially affected small governments, enabling officials of affected small governments to have meaningful and timely input in the development of EPA regulatory proposals with significant Federal intergovernmental mandates, and informing, educating, and advising small governments on compliance with the regulatory requirements.

EPA has determined that this proposed rule would not contain a Federal mandate that may result in expenditures of $100 million or more for state, local, and tribal governments, in the aggregate, or the private sector in any one year. The nationwide capital cost for these rule amendments is estimated to be zero and the annual nationwide costs for these amendments are estimated to be less than $1 million. Thus, today's rule is not subject to the requirements of sections 202 and 205 of the Unfunded Mandates Act. EPA has determined that this proposed rule contains no regulatory requirements that might significantly or uniquely affect small governments. The new data elements and submission requirements would impose only minimal burden on these entities.

E. Executive Order 13132: Federalism

Executive Order 13132, entitled ''Federalism'' (64 FR 43255, August 10, 1999), requires EPA to develop an accountable process to ensure ''meaningful and timely input by State and local officials in the development of regulatory policies that have federalism implications.'' ''Policies that have federalism implications'' is defined in the Executive Order to include regulations that have ''substantial direct effects on the States, on the relationship between the national government and the States, or on the distribution of power and responsibilities among the various levels of government.''

Under Executive Order 13132, EPA may not issue a regulation that has federalism implications, that imposes substantial direct compliance costs, and that is not required by statute, unless the Federal government provides the funds necessary to pay the direct compliance costs incurred by State and local governments, or EPA consults with State and local officials early in the process of developing the proposed regulation.

This proposed rule does not have federalism implications. It would not have substantial direct effects on the States, on the relationship between the national government and the States, or on the distribution of power and responsibilities among the various levels of government, as specified in Executive Order 13132. The proposed rule focuses on requirements for regulated facilities without affecting the relationships between governments in its implementation. Thus, Executive Order 13132 does not apply to this rule. Although section 6 of Executive Order 13132 does not apply to this rule, EPA did consult with State and local officials and implementing agencies in developing this rule. EPA held a RMP Implementing Agency meeting in Atlanta, October 21 and 22, 2002. State and local implementing agencies in attendance included representatives from Alabama, California, Colorado, Delaware, Florida, Georgia, Hawaii, Iowa, Kentucky, Louisiana, Mississippi, New Jersey, North Carolina, Ohio, Pennsylvania, and South Carolina. Participants were invited to provide feedback regarding the program and related software, as well as suggestions for improvements.

In the spirit of Executive Order 13132, and consistent with EPA policy to promote communications between EPA and State and local governments, EPA specifically solicits comment on this proposed rule from State and local officials.

F. Executive Order 13175: Consultation and Coordination With Indian Tribal Governments

Executive Order 13175, entitled ''Consultation and Coordination with Indian Tribal Governments'' (65 FR 67249, November 9, 2000), requires EPA to develop an accountable process to ensure ''meaningful and timely input by tribal officials in the development of regulatory policies that have tribal implications.'' This proposed rule does not have tribal implications, as specified in Executive Order 13175. The proposed rule focuses on requirements for all regulated sources without affecting the relationships between tribal governments in its implementation, and applies to all regulated sources, without distinction of the surrounding populations affected. Thus, Executive Order 13175 does not apply to this rule. EPA specifically solicits additional comment on this proposed rule from tribal officials.

G. Executive Order 13045: Protection of Children From Environmental Health & Safety Risks

The Executive Order 13045, entitled ''Protection of Children from Environmental Health Risks and Safety Risks'' (62 FR 19885, April 23, 1997) applies to any rule that: (1) Is determined to be economically significant under Executive Order 12866, and (2) concerns an environmental health or safety risk that EPA has reason to believe may have a disproportionate effect on children. If the regulatory action meets both criteria, the Agency must evaluate the environmental health or safety effects of the planned rule on children, and explain why the planned regulation is preferable to other potentially effective and reasonably feasible alternatives considered by the Agency. EPA interprets Executive Order 13045 as applying only to those regulatory actions that are based on health or safety risks, such that the analysis required under section 5–501 of the Order has the potential to influence the regulation. This proposal is not subject to Executive Order 13045 because it does not involve regulatory decisions that are based on

public health or safety risks, nor would it establish environmental standards intended to mitigate health or safety risks.

H. Executive Order 13211: Actions That Significantly Affect Energy Supply, Distribution, or Use

This rule is not subject to Executive Order 13211, ''Actions Concerning Regulations That Significantly Affect Energy Supply, Distribution, or Use'' (66 FR 28355 (May 22, 2001)) because it is not a significant regulatory action under Executive Order 12866.

I. National Technology Transfer and Advancement Act

Section 12(d) of the National Technology Transfer and Advancement Act of 1995 (''NTTAA''), Public Law 104–113, section 12(d) (15 U.S.C. 272 note) directs EPA to use voluntary consensus standards in its regulatory activities unless to do so would be inconsistent with applicable law or otherwise impractical. Voluntary consensus standards are technical standards (*e.g.*, materials specifications, test methods, sampling procedures, and business practices) that are developed or adopted by voluntary consensus standards bodies. The NTTAA directs EPA to provide Congress, through OMB, explanations when the Agency decides not to use available and applicable voluntary consensus standards. This proposed rulemaking does not involve technical standards. Therefore, EPA is not considering the use of any voluntary consensus standards.

Lists of Subjects in 40 CFR Part 68

Environmental protection, Administrative practice and procedure, Air pollution control, Chemicals, Hazardous substances, Intergovernmental relations, Reporting and recordkeeping requirements.

Authority: Sec. 112(r) of the Clean Air Act.

Dated: July 23, 2003.

Marianne L. Horinko,

Acting Administrator.

For the reasons set out in the preamble, title 40, chapter I, part 68 of the Code of Federal Regulations is proposed to be amended to read as follows:

PART 68—CHEMICAL ACCIDENT PREVENTION PROVISIONS

1. The authority citation for part 68 continues to read as follows:

Authority: 42 U.S.C. 7412(r), 7601(a)(1), 7661–7661f.

2. Section 68.155 is amended by removing paragraph (c) and redesignating paragraphs (d) through (g) as paragraphs (c) through (f).

3. Section 68.160 is amended by revising paragraph (b)(6), redesignating paragraphs b(14) through b(18) as paragraphs b(15) through b(19), and adding a new paragraph b(14) as follows:

§ 68.160 Registration.

* * * * *

(b) * * *

(6) The name, title, telephone number, 24-hour telephone number, and the e-mail address (if an e-mail address exists) of the emergency contact;

* * * * *

(14) The name, the mailing address, and the telephone number of any contractor who helped prepare the RMP;

* * * * *

5. Section 68.190 is amended by revising paragraphs (b)(6) and (b)(7), by adding a new paragraph (b)(8), by redesignating paragraph (c) as paragraph (d), and by adding new paragraphs (c) and (e) to read as follows:

§ 68.190 Updates.

* * * * *

(b) * * *

(6) Within 6 months of a change that requires a revised offsite consequence analysis as provided in § 68.36;

(7) Within 6 months of a change that alters the Program level that applied to any covered process; and

(8) Within 6 months of the date of an accidental release of any chemical from a covered process, where the accidental release meets the criteria for reporting in the 5-year accident history as provided in § 68.42(a).

(c) The owner or operator of a stationary source shall submit a correction to the RMP for any change in the emergency contact information required by § 68.160 (b)(6) within one month of the change.

* * * * *

(e) Following submission of an initial RMP, an owner or operator submitting any subsequent version or revision of the RMP shall identify the type of submission being made and the reason for it. The types of submission include:

(1) Corrections (*e.g.*, changes to fix minor technical errors, update administrative information, provide missing data elements or reflect facility ownership changes) which do not require an update and revision of the RMP under this section;

(2) Re-submissions under paragraph (b) of this section;

(3) De-registrations (revised registrations) under paragraph (c) of this section; and

(4) Withdrawals of an RMP for any facility that was erroneously considered subject to part 68.

* * * * *

[FR Doc. 03–19281 Filed 7–30–03; 8:45 am]

BILLING CODE 6560–50–P

Federal Register

Thursday,
July 31, 2003

Part VI

Federal Trade Commission

16 CFR Part 310
Telemarketing Sales Rule Fees; Final Rule

FEDERAL TRADE COMMISSION

16 CFR Part 310

Telemarketing Sales Rule Fees

AGENCY: Federal Trade Commission.

ACTION: Final rule.

SUMMARY: The Federal Trade Commission (the ''Commission'' or ''FTC'') is issuing this Final Rule to amend the FTC's Telemarketing Sales Rule (''TSR'') by adding a new Section 310.8 that would impose fees on entities accessing the National Do Not Call Registry.

EFFECTIVE DATE: Section 310.8 (''the Final Fee Rule'') will become effective September 1, 2003, the first day that entities engaged in telemarketing will be able to access the National Do Not Call Registry.

ADDRESSES: Requests for copies of this Final Fee Rule should be sent to: Public Reference Branch, Federal Trade Commission, Room 130, 600 Pennsylvania Avenue, NW., Washington, DC 20580. The complete record of this proceeding is also available at that address, and on the Internet at: *http://www.ftc.gov/bcp/rulemaking/tsr/tsrrulemaking/index.htm.*

FOR FURTHER INFORMATION CONTACT: David M. Torok, (202) 326–3075, Division of Marketing Practices, Bureau of Consumer Protection, Federal Trade Commission, 600 Pennsylvania Avenue, NW., Washington, DC 20580.

SUPPLEMENTARY INFORMATION:

I. Background

On January 30, 2002, the FTC published a Notice of Proposed Rulemaking to amend the FTC's TSR and to request public comment on the proposed changes. 67 FR 4492 (Jan. 30, 2002) (''the Rule NPRM''). Among other provisions, the Rule NPRM proposed to establish a National Do Not Call Registry, to be maintained by the FTC, that would permit consumers who prefer not to receive telemarketing calls to register on one centralized list. On May 29, 2002, the FTC published another Notice of Proposed Rulemaking to further amend the TSR by imposing user fees on sellers and telemarketers to access the proposed registry. 67 FR 37362 (May 29, 2002) (''the User Fee NPRM''). In drafting the User Fee NPRM, the Commission was guided by the Independent Offices Appropriations Act of 1952, 31 U.S.C. 9701, and Office of Management and Budget Circular No. A–25. The Commission received 34 comments in response to the User Fee NPRM.

The Commission issued final amendments to the TSR on December 18, 2002. 68 FR 4580 (Jan. 29, 2003). Among the changes made to the TSR, the Commission adopted the proposal to establish a National Do Not Call Registry, permitting consumers to register, via either a toll-free telephone number or the Internet, their preference not to receive telemarketing calls. The Amended TSR requires telemarketers to refrain from calling consumers who have placed their numbers on the national registry, starting October 1, 2003, the date by which full compliance with the ''do-not-call'' registry provisions of the Amended TSR, 16 CFR 310.4(b)(1)(iii)(B), is required. *See* 68 FR 16238, 16245 (April 3, 2003). To comply with this requirement, telemarketers will be required to access the national registry at least once every three months to remove from their telemarketing lists the telephone numbers of those consumers who have placed their numbers on the registry. 16 CFR 310.4(b)(3)(iv). When it promulgated the Amended TSR, the Commission reserved its decision on the issues raised in the User Fee NPRM, stating that it would seek further comment in a revised Notice of Proposed Rulemaking. *See* 68 FR 4580, 4640 n. 716.

On February 20, 2003, the President signed into law the Consolidated Appropriations Resolution of 2003, Pub. L. 108–7 (2003) (''the Appropriations Act''), which appropriated funds for the operation of the FTC during fiscal year 2003. In the Appropriations Act, Congress also authorized the agency to collect fees sufficient to implement and enforce the ''do-not-call'' provisions of the Amended TSR. Congress further estimated the costs for fiscal year 2003 at $18,100,000. *Id.* at Division B, Title II. *See also* The Do-Not-Call Implementation Act, Pub. L. 108–10 (2003) (''the Implementation Act'') at sec. 2. Pursuant to the Appropriations Act and the Implementation Act, as well as the Telemarketing and Consumer Fraud and Abuse Prevention Act, 15 U.S.C. 6101–08 (''the Telemarketing Act''), the FTC issued a Revised Fee Notice of Proposed Rulemaking (''the Revised Fee NPRM''). 68 FR 16238 (April 3, 2003). The Commission received 35 comments in response to the Revised Fee NPRM.[1]

On July 3, 2003, the Federal Communication Commission (''FCC'') issued its Report and Order in the Matter of Rules and Regulations Implementing the Telephone Consumer Protection Act of 1991 (''the FCC Rules'').[2] Among numerous other provisions, the FCC Rules prohibit any ''person or entity'' from ''initiating any telephone solicitation'' to a ''residential telephone subscriber who has registered his or her telephone number on the national do-not-call registry of persons who do not wish to receive telephone solicitations that is maintained by the federal government.''[3]

Based on its review of the record in this proceeding, and on its law enforcement experience in this area, the Commission hereby promulgates this Final Rule establishing fees for entities accessing the National Do Not Call Registry.

II. Constitutionality

Some commenters, principally ATA and DMA, contended that both the National Do Not Call Registry and its associated fees would violate telemarketers' First Amendment rights.[4] The Commission was mindful of the First Amendment implications of the national registry while amending the TSR,[5] and throughout this rulemaking has carefully considered the constitutionality of the proposed Fee Rule.[6]

Relying primarily on case law addressing speech entitled to full First Amendment protection, ATA contended the registry's fees are unconstitutional in part because by ''making purchase of the list a precondition for engaging in telemarketing, the Commission has structured the list as a prior restraint on protected speech.''[7] The Commission

[1] A list of the commenters in this proceeding, and the acronyms used to identify each, is attached hereto as Appendix A. Comments submitted in response to the Revised Fee NPRM will be cited in this Notice as ''[Acronym of Commenter]-Revised Fee at [page number].'' Comments submitted in response to the User Fee NPRM will be cited as ''[Acronym of Commenter]-User Fee at [page number].''

[2] The FCC Rules may be found at: http://hraunfoss.fcc.gov/edocs_public/attachmatch/FCC–03–153A1.pdf.

[3] 47 CFR 64.1200(c)(2), amended July 3, 2003.

[4] *See* ATA-Revised Fee at 1–16; DMA-Revised Fee at 6–7. *See also* ICL-Revised Fee at 5–6 (asserting simply ''Given that the nondeceptive and nonmisleading telemarketing activity is protected commercial speech, the decision to charge some persons, corporate or individual, more than others with no relation to furtherance of residential privacy is unconstitutional.''); DB-Revised Fee; JJ-Revised Fee; BP-Revised Fee; GS-Revised Fee; JS-Revised Fee; & SS-Revised Fee at 1–2 (individuals voicing concerns about freedom of speech).

[5] *See, e.g.*, 68 FR 4580, 4634–37 (January 29, 2003).

[6] To the extent that ATA and DMA challenge the constitutionality of the National Do Not Call Registry itself, and not the fee proposal, the rulemaking on the registry is closed and the parties are briefing the matter for the courts to decide.

[7] ATA-Revised Fee at 3–6. *See also* DMA-Revised Fee at 6 n.11 (contending ''the Court took a dim

disagrees and believes that the registry fee provision is constitutional. To the extent the fee imposes a restraint on speech, it restrains only commercial speech. The Supreme Court has ''observed that commercial speech is such a sturdy brand of expression that traditional prior restraint doctrine may not apply to it.'' *See Central Hudson Gas & Elec.* v. *Pub. Serv. Comm. of N.Y.*, 447 U.S. 557, 571 n.13 (1980) (quoting *Virginia Pharmacy Bd.* v. *Virginia Citizens Consumer Council,* 425 U.S. 748, 771–72 n.24 (1976)). Moreover, the Final Fee Rule ensures that the fee is collected from the telemarketing industry through procedures that safeguard against unbridled discretion in the hands of a government official or agency.[8] The registry fees are more akin to the registration fees or business licenses that are commonly imposed upon businesses before they can engage in commercial speech. A regulatory fee on speech is constitutionally permissible when it is related sufficiently to the costs of administering and enforcing that regulation.[9]

III. Access to the National Do Not Call Registry

A. Entities That Are Allowed Access

In Section 310.8(e) of the Revised Fee NPRM, the Commission proposed to allow access to the national registry by telemarketers, sellers, others engaged in or causing others to engage in telephone calls for commercial purposes, and service providers acting on behalf of such persons.[10] The Commission stated that such access to the National Do Not Call Registry may be necessary to effectuate more fully the purpose of the ''do-not-call'' regulations; namely, to enable consumers to stop unwanted telemarketing calls. Such access would allow those entities that are exempt from the FTC's jurisdiction, but that want to scrub their calling lists as a matter of customer service, to obtain the information necessary to do so. It also would allow sellers to obtain access, as well as other entities that have traditionally provided service to the telemarketing industry. The Commission further stated that the information in the national registry should be used for no other purpose than to stop unwanted telemarketing calls. Thus, the Commission proposed that, prior to gaining access to the national registry, a person would be required to certify, under penalty of law, that the person is accessing the registry solely to comply with the provisions of this Rule or to otherwise prevent calls to telephone numbers on the registry.

A number of commenters supported the Commission's proposal to allow for such broad access to the national registry.[11] Others suggested that nonprofit organizations soliciting donations also should be allowed to access the national registry. For example, DMA noted that such access would ''effectuate the purposes of the do-not-call regulations'' by allowing such entities to voluntarily scrub their calling lists.[12] The Commission agrees that nonprofit organizations that wish to obtain access to the national registry to prevent calling consumers whose telephone numbers are on the registry, even though they are not required by rule to do so, should be allowed the opportunity. As a result, the Commission is amending Section 310.8(e) by eliminating the phrase ''commercial purposes'' from this provision, and instead allowing access to the national registry to entities ''engaged in or causing others to engage in telephone calls to consumers.'' As previously stated, each entity will be required to certify, under penalty of law, that it is accessing the registry solely to comply with the provisions of this Rule or to otherwise prevent calls to telephone numbers on the registry.

B. Entities Required To Pay the Fee

The Revised Fee NPRM proposed requiring each seller to pay, on an annual basis, the appropriate fee for accessing the National Do Not Call Registry prior to initiating, or causing a telemarketer to initiate, an outbound telephone call. After paying the appropriate fee each annual period, the seller would be provided with a unique account number that it could use to gain direct access to the national registry at any time during its annual period.[13] In addition, the seller could provide its account number to any telemarketer or service provider with which it does business. That unique account number would permit the telemarketer or service provider to gain access to the information to which the seller has subscribed. The Commission noted that under this revised fee structure, each seller would be charged only one time annually for access to the information included in the national registry, and would be allowed to transfer its ability to access the national registry to whatever telemarketers or service providers it wished to employ on its behalf.

A number of commenters noted that the proposed rule would require certain sellers to pay for access to the national registry, even if they do not have to gain such access under the Amended TSR.[14] Specifically, under the Amended TSR, a seller that calls only persons with whom the seller has an established business relationship, or from whom the seller has obtained the express written agreement to call, is not required to access the national registry prior to engaging in those calls.[15] Nonetheless, as proposed, the Revised Fee NPRM would require such sellers to pay the annual fee prior to making such calls. ATA described this aspect of the proposed fees as a ''particularly invidious prior restraint'' and thus a violation of the First Amendment because telemarketers are forced to ''pay a fee even where they have no use for information in the registry.''[16] As VISA noted, the FTC should ''clarify in the final rule that if a seller is not required to access the registry pursuant to an exemption or otherwise, the seller

view of permits to engage in constitutionally protected speech whose issuance depended on the payment of a license tax because it acted as a prior restraint on speech'').

[8] ATA and DMA also challenge the fee size and structure. *See, e.g.*, ATA-Revised Fee at 10 (categorizing the registry's fee structure as ''irrationally differentiated''); DMA-Revised Fee at 1. Because Congress's guidance on the amount of the fees to be collected and the Commission's efforts to tailor the fee structure are best understood in context, these First Amendment concerns will be addressed throughout the remaining sections of this Statement.

[9] *See, e.g., Coalition for Abolition of Marijuana Prohibition* v. *City of Atlanta,* 219 F.3d 1301, 1324 n.16 (11th Cir. 2000); *National Awareness Foundation* v. *Abrams*, 50 F.3d 1159, 1164–1168 (2d Cir. 1995).

[10] Proposed Section 310.8(e) also permitted access to the national registry by any government agency that has the authority to enforce a federal or state ''do-not-call'' statute or regulation. Such agencies will access information in the national registry through Consumer Sentinel, a dedicated, secure website available only to law enforcement agencies. The Commission is expanding this provision of the Final Fee Rule to allow access to the national registry to any ''government agency that has law enforcement authority.'' This revised language more effectively mirrors the list of law enforcement agencies that currently have access to Consumer Sentinel, and that therefore will have access to the national registry data.

[11] *See* ARDA-Revised Fee at 2; BOA-Revised Fee at 1; Household-Revised Fee at 2; NCL-Revised Fee at 1 (''Entities that are exempt from the FTC's jurisdiction should not be prevented from voluntarily accessing the registry to avoid calling consumers who do not wish to receive telemarketing solicitations.'').

[12] DMA-Revised Fee at 15–16. *See also* NCL-Revised Fee at 1.

[13] As set forth in Section 310.8(d) of the Revised Fee NPRM and the Final Fee Rule, the ''annual period'' is defined as the twelve months following the first day of the month in which the person paid the fee. For example, a seller who pays its annual fee on September 15, 2003, has an ''annual period'' that runs from September 1, 2003 through August 31, 2004.

[14] *See* ABA-Revised Fee at 1; ATA-Revised Fee at 5–6; VISA-Revised Fee at 1–2.

[15] *See* 16 CFR 310.4(b)(1)(iii)(B)(i) and (ii).

[16] ATA-Revised Fee at 5–6.

should not be required to pay a user fee provided the seller does not access the registry for other reasons.''[17]

The Commission agrees that sellers engaged solely in calls to persons with whom they have an established business relationship or from whom they have obtained express written agreement to call, and who do not otherwise want to access the national registry, should not have to pay an annual fee. As a result, the Commission is amending Section 310.8(a) to make clear that sellers do not have to pay for access to the National Do Not Call Registry if the seller initiates, or causes a telemarketer to initiate, calls solely to persons pursuant to the exemptions set forth in Amended TSR §§ 310.4(b)(1)(iii)(B)(*i*) or (*ii*), and the seller does not access the National Do Not Call Registry for any other purpose. A similar change is being made to Section 310.8(b), regarding telemarketer access to the national registry.

Some commenters requested clarification that sellers exempt from the Amended TSR are not required to access the National Do Not Call Registry and pay the annual fee.[18] With the adoption of the FCC Rules, the list of sellers exempt from the requirements of the National Do Not Call Registry under federal law is considerably narrowed. Any such exempt seller, however, is not required to access the national registry or pay the annual fee. For example, solicitations to induce charitable contributions via outbound telephone calls are not covered by the National Do Not Call Registry requirements of the TSR.[19] As a result, sellers involved only in such solicitations would not be required to pay a fee or access the national registry. In addition, entities engaged solely in conducting surveys are not seeking to induce the purchase of goods or services and therefore are not engaged in ''telemarketing'' nor subject to the TSR.[20] Similarly, political fund raising is not ''telemarketing'' and is not covered.[21] Of course, any of those entities may access the national registry if they voluntarily wish to prevent calling telephone numbers that are on the registry, or if they are required by other laws or regulations to gain such access.

DMA stated that nonprofit organizations voluntarily accessing the national registry to avoid calling potential donors who do not want to receive telemarketing calls should not be charged for such access.[22] The Commission agrees that such charges are unwarranted. Section 310.8(c) is amended to provide that there shall be no charge to any person engaging in or causing others to engage in outbound telephone calls to consumers and who is accessing the national registry without being required under this Rule, the FCC Rules, or any other federal law.[23] Such persons must provide all information required of other entities accessing the registry, must certify, under penalty of law, that they are accessing the registry solely to prevent telephone calls to telephone numbers on the registry, and must further certify that they are accessing the registry without being required under this Rule, the FCC Rules, or any other federal law. Affording these persons such access to the registry will enable them to abide by consumers' choices not to be called by commercial telemarketers. At the same time, the certification requirement—under penalty of law—will enable the Commission to take appropriate steps against those who misuse the registry.

The Commission also proposed in the Revised Fee NPRM that telemarketers who are not also sellers—*i.e.*, entities that engage in telemarketing only on behalf of others—would not have to pay a separate fee for their access to the national registry. Similarly, list brokers or other service providers who develop and/or scrub the calling lists for their seller-clients would not have to pay for their individual access to the national registry. Instead, such telemarketers and service providers would be required to ensure that their seller-clients have paid for access to the National Do Not Call Registry prior to initiating outbound telephone calls, or providing services, on their behalf. Telemarketers and service providers would gain this assurance by obtaining and using the seller's unique account number to access the national registry.

DMA opposed this ''seller pays'' model for the National Do Not Call Registry.[24] Instead, DMA suggested that the FTC ''should leave the issue of who pays for the List to the contractual provisions between service bureaus and sellers.''[25] IMC stated that a ''more workable proposal would be to require each calling entity, third party *or* seller using in house callers to purchase and implement the list. Thus, IMC could purchase access to the registry once and call on behalf of all its clients.''[26] The Commission does not believe such a system would equitably spread the fees for the national registry among all entities that engage in telemarketing. As the Commission explained in the Revised Fee NPRM, sellers are the ultimate beneficiaries of telemarketing campaigns, and covered sellers must gain access to the information in the national registry to remain in compliance with the ''do-not-call'' provisions of the Amended TSR. As a result, all such sellers should pay an appropriate fee for that access. Moreover, by charging only telemarketers for access to the national registry, and charging them only once for their access on behalf of multiple clients, IMC's proposed fee structure would inequitably benefit those sellers that employ a telemarketer with multiple clients. This inequitable advantage is created because those sellers would bear less of the cost of access to the same information than sellers that engage in their own telemarketing without hiring a telemarketer. Thus, the Commission will require sellers, and not their telemarketers or service providers, to pay for access to the national registry.[27]

The FCC Rules recognize that allowing telemarketers and others to share the information obtained from the national registry ''would threaten the financial support for maintaining the database.''[28] In fact, the FCC Rules specifically prohibit any entity that accesses the national registry from ''participat[ing] in any arrangement to share the cost of accessing the national

[17] VISA-Revised Fee at 1–2.

[18] *See* FSR-Revised Fee at 1–2; VISA-Revised Fee at 1–2.

[19] 16 CFR 310.6(a). *See also* 47 CFR 64.1200(f)(9)(iii), amended July 3, 2003 (FCC Rules defining a ''telephone solicitation'' as not including a call or message ''by or on behalf of a tax-exempt nonprofit organization.''

[20] The Amended TSR defines ''telemarketing'' as a ''plan, program, or campaign which is conducted to induce the purchase of goods or services or a charitable contribution, by use of one or more telephones, and which involves more than one interstate telephone call.'' 16 CFR 310.2(cc).

[21] Sellers that engage solely in intrastate telemarketing, or that engage in businesses outside of the jurisdictional limitations of the FTC, are not required by the Amended TSR to access the National Do Not Call Registry or pay for such access. However, such companies are required by the FCC Rules to access the national registry and pay for such access. *See* FCC Rules at ¶ 27.

[22] *See* DMA-Revised Fee at 15–16.

[23] Such persons consist solely of entities engaged in outbound telephone calls to consumers to induce charitable contributions, for political fund raising, or to conduct surveys.

[24] See DMA-Revised Fee at 7–8.

[25] Id.

[26] IMC-Revised Fee at 5.

[27] The FCC Rules require all entities ''making telephone solicitations (or on whose behalf telephone solicitations are made)'' to ''purchase[] access to the relevant do-not-call data from the administrator of the national database.'' 47 CFR 64.1200(c)(2)(i)(E), amended July 3, 2003. The Commission will deem all telemarketers or service providers who are not also sellers to have ''purchased access'' to the national registry by providing the unique account number of the seller on whose behalf the telemarketer or service provider is gaining access.

[28] FCC Rules at ¶ 32, n.129.

database, including any arrangement with telemarketers who may not divide the costs to access the national database among various client sellers.''[29] The Commission agrees with the FCC, and believes such a prohibition is appropriate to include in the Final Fee Rule as well. As a result, the Commission is including similar prohibitory language in Section 310.8(c).[30]

The Revised Fee NPRM did not permit any entity, other than a seller, to purchase the list of numbers in the national registry. A number of commenters noted that telemarketers calling on behalf of exempt entities would be in the ''untenable position'' of being required to comply with the ''do-not-call'' provisions of the Amended TSR, but not having the ability to access the national registry without their exempt seller-clients having paid for access.[31] To address this potential problem, some commenters suggested allowing telemarketers direct access to the national registry.[32] Convergys, a large telemarketer commenter, described a number of other situations when telemarketers may want to subscribe to the national registry although their seller-client is not required to do so, or has already purchased the list. For example, the telemarketer may want to scrub the calling list of a client calling customers with an existing business relationship, or ''to help guard against errors or omissions'' in the sellers' lists and to re-verify the accuracy of those lists.[33]

For the reasons set forth in these comments, the Commission agrees that allowing independent access to the national registry by telemarketers or other service providers is appropriate. As a result, telemarketers or service providers will be allowed to gain access to the national registry on their own behalf, without being limited solely to the access allowed for their seller-clients. To maintain the fairness of the fee structure, however, telemarketers and service providers will be required to pay the appropriate fee for such independent access. Moreover, covered sellers still will be required to pay the fee prior to engaging in, or causing a telemarketer to engage in, outbound telephone calls for which access to the ''do-not-call'' registry is required by the Amended TSR. This ''covered seller pays'' requirement remains in place regardless of whether the telemarketer or service provider employed by the seller independently and voluntarily pays for access to the national registry. In addition, telemarketers and service providers paying for such independent access must certify that they are accessing the national registry solely to comply with the provisions of the Amended TSR, or otherwise to prevent telephone calls to telephone numbers on the national registry. Finally, such telemarketers or service providers are not permitted to use the information they obtain from the national registry on behalf of any entity, covered seller or exempt, unless that entity has paid the appropriate fee for access to the information or, for exempt sellers, has submitted the appropriate certification to gain access to the national registry.

C. Other Registry Access Issues

Commenters raised three other issues regarding access to the national registry. First, commenters suggested allowing sellers and telemarketers to allocate responsibility among themselves for obtaining access to the national registry. The Revised Fee NPRM anticipated that all covered sellers would initially access the national registry on their own behalf, pay the appropriate fee and acquire an account number, which they could then provide to any telemarketer or service provider that they wish to hire. Commenters noted, however, that telemarketers and service bureaus frequently access state ''do-not-call'' lists on behalf of their seller-clients.[34] These commenters maintained that sellers should be permitted to access the national registry either directly, or permit a third party, such as a telemarketer or list broker, to enroll and access on the seller's behalf. ''In either event, a unique account number could be assigned for each seller, thereby allowing it the flexibility to change telemarketers/service providers, or use multiple telemarketers, once an access fee has been paid on its behalf.''[35]

The Commission is persuaded that such flexible access is appropriate. Sellers may contract with telemarketers or other service providers to access the national registry on their behalf to satisfy the rule's requirements. In this way, sellers and their agents can allocate the responsibility for accessing the registry, although the seller remains ultimately liable for calls made on its behalf, and telemarketers remain liable for ensuring that their covered sellers have paid the appropriate fee. A unique account number still will be provided in the seller's name, for use by the seller throughout its annual period. As a result, §§ 310.8(a), (b), and (d) are amended to allow sellers to pay the annual fee ''either directly or through another person.''

The second issue raised by commenters regarding access to the national registry concerns the frequency of that access. Convergys stated that the fee rule should require telemarketers to access the data quarterly, regardless of the number of new clients they might acquire during that period. Telemarketers could then update their access and their registration information (with identities of new sellers) on a quarterly basis.[36] Similarly, DMA stated that it is inefficient to require a service bureau to access the registry separately in the event it signed up a new client, even though it has a current version of the telephone numbers in the registry.[37] Convergys also noted that current telemarketer systems are designed to allow telemarketers to access data directly and use it for more than one client. According to Convergys, limiting access to varying levels paid for by various clients would require significant modifications, burdens and costs.[38]

The Commission never proposed requiring telemarketers or service bureaus to access the national registry or download data separately for each client. There are two requirements in effect that mandate the frequency of access to the national registry. First, § 310.4(b)(3)(iv) of the Amended TSR requires sellers and telemarketers to employ a version of the national registry obtained from the Commission no more than three months prior to the date any call is made. Second, § 310.8(a) of the revised fee rule requires sellers to pay the annual fee prior to initiating, or causing a telemarketer to initiate, outbound telephone calls to persons whose numbers are on the registry. As a result, a telemarketer need only access the national registry once every three months, assuming it can scrub all of its calling lists by using that frequency of access.[39] It can call on behalf of all of

[29] 47 CFR 64.1200(c)(2)(i)(E), amended July 3, 2003.

[30] Inclusion of this prohibition in the Fee Rule also will ''maximize consistency'' between the FTC and FCC Rules. *See* Do Not Call Implementation Act, § 3.

[31] *See* ABA-Revised Fee at 1–2; BOA-Revised Fee at 1–2; Convergys-Revised Fee at 3–5; FSR-Revised Fee at 1–2.

[32] *See* BOA-Revised Fee at 1–2; Convergys-Revised Fee at 5.

[33] *See* Convergys-Revised Fee at 2–5.

[34] *See* ERA-Revised Fee at 3–5; MPA-Revised Fee at 4–5; West-Revised Fee at 1–2.

[35] ERA-Revised Fee at 4.

[36] Convergys-Revised Fee at 6–8.

[37] DMA-Revised Fee at 8.

[38] Convergys-Revised Fee at 6.

[39] The Commission has developed the ''do not call'' rules to allow sellers and telemarketers to determine when and how frequently they need to access the national registry to remain in compliance. Unlike many state systems, the national registry is continuously updated as

Continued

its clients during that period, scrubbing from all of its calling lists those numbers that were included in the national registry at the time the telemarketer accessed the registry. If the seller-client agrees to allow the telemarketer to use the information already in the telemarketer's files from a prior download from the national registry within the previous three months, there is no rule violation for the telemarketer to do so. In other words, telemarketers and service providers acting on behalf of sellers may use one download from the national registry on behalf of multiple clients, as long as the fee for each of the seller-clients is paid.

The third access issue raised by commenters is an objection to the requirement that telemarketers and list brokers must identify their clients when accessing the national registry. According to DMA, these ''contractual relationships are proprietary information and bear no relationship to consumer privacy.'' [40] Convergys stated: ''For any business, customer identity is inherently sensitive, proprietary data and there is no basis in the record for requiring telemarketers to disclose it routinely and in the absence of substantial complaints or other evidence to suggest there have been violations.'' [41] The Commission understands the likely proprietary nature of these business relationships, and notes that, to the extent, if any, such information constitutes trade secrets or other confidential or privileged commercial or financial information, it would not be subject to mandatory public disclosure by the Commission.[42] Nevertheless, this information is critical for effective law enforcement of the ''do not call'' registry provisions of the Amended TSR, as well as for effective collection of the required fees. Typically, consumers reporting ''do-not-call'' complaints will have only the name of the seller provided to the consumer during the call. As part of the investigation of such complaints, law enforcement may seek to determine whether the seller made that call on its own behalf, or used the services of a telemarketer. Information provided by sellers and telemarketers to gain access to the national registry is highly relevant to law enforcement. Querying the registry is faster, less expensive, and a potentially more reliable method of obtaining that information than traditional discovery tools, which also likely would eventually result in the disclosure of the same proprietary information. Equally important, to ensure that all sellers pay their appropriate share of the registry fees, it is critical to know the identity of each seller that pays the fee, and on whose behalf each telemarketer or service provider is accessing the national registry. Thus, the Commission will continue to require, in § 310.8(e), that if a person is accessing the national registry on behalf of other sellers, that person must identify each of the other sellers.

D. Seller and Telemarketer Liability

In the Revised Fee NPRM, the Commission proposed, in Section 310.8(a) of the Rule, to make sellers directly liable for initiating, or causing a telemarketer to initiate, an outbound telephone call without first paying the appropriate fee for access to the national registry. The Commission also proposed, in Section 310.8(b), to make telemarketers directly liable for initiating an outbound telephone call on behalf of a seller without first ensuring that their seller-clients have paid for up-to-date access to the National Do Not Call Registry. The Commission proposed imposing this liability under the authority of the Appropriations Act and the Implementation Act, in addition to the Telemarketing Act, which provides the authority for the other portions of the Amended TSR.

This proposed liability engendered a wide range of comment. For example, NCL stated: ''The FTC's proposal to hold sellers and any entities acting on their behalf directly liable for compliance with the fee requirements is absolutely crucial to prevent abuses in this regard.'' [43] On the other hand, IMC maintained that liability should not exist unless a seller or telemarketer calls a consumer who had placed their number on the registry. According to IMC, liability for simply failing to purchase the list is unrelated to any consumer privacy interest and is unconstitutional.[44]

As the Commission stated in the Revised Fee NPRM, direct liability on sellers and telemarketers is necessary to effectuate fairly the mandate of the Appropriations Act and the Implementation Act, which authorize the Commission to collect fees sufficient to cover the costs of implementing and enforcing the ''do-not-call'' provisions of the Amended TSR. Without such direct liability, the Commission remains concerned that not all entities that obtain information from the national registry will pay their fair share of the fees for that information, resulting in increased fees for those entities that do pay. The Commission continues to believe that the most effective way to ensure that all covered sellers pay their fair share of the registry fees is to impose direct liability upon them if they initiate, or cause a telemarketer to initiate, a call to a consumer without first paying the appropriate annual fee.

As for telemarketer liability, a number of commenters suggested that ''where a service bureau has reasonably relied on evidence that its seller clients have paid for access, the service bureau should not be held liable for the seller's lack of compliance.'' [45] The Commission agrees that telemarketers can rely on the registry for proof of payment as long as that reliance is reasonable given the totality of the circumstances. If a telemarketer or list broker accesses the national registry on behalf of a seller-client and presents that seller-client's unique account number, the telemarketer will be able to determine whether the seller's account is paid up to date, and the extent of access allowed by that payment. The telemarketer or service provider may rely on that information as proof of the seller's payment.

Thus, Sections 310.8(a) and (b) continue to impose direct liability on sellers and telemarketers. The failure of a covered seller to pay the appropriate fee prior to initiating or causing another entity to initiate an outbound telephone call and the failure of a telemarketer to ensure that a covered seller has paid the appropriate fee prior to initiating an

consumers register. As a result, telemarketers obtain the most up-to-date list of telephone numbers each time they access the registry. This allows consumers to see a decrease in telemarketing calls from the first day they register, rather than having to wait for their numbers to be published in a quarterly list. This caused some concern for one commenter, West, that stated: ''Without a defined update schedule, the potential exists for numbers to be missed in the three-month window. It takes approximately twenty to twenty-four hours to update the West system with a do-not-call registry consisting of one million records because the upload happens on a real time basis. Given this, there is the potential for a number that is added one day after West downloads the do-not-call registry to be missed in the three month window. This would require West to actually download the list more than quarterly to avoid this potential problem.'' West-Revised Fee at 2. It is up to the individual seller or telemarketer to determine how frequently it must access the national registry to remain in compliance with the requirement that it use a version of the registry obtained from the Commission not more than three months prior to the date any call is made.

[40] DMA-Revised Fee at 7–8.

[41] Convergys-Revised Fee at 5–6.

[42] *See* Freedom of Information Act Exemption 4, 5 U.S.C. 552(b)(4); FTC Act § 6(f), 15 U.S.C. 46(f).

[43] NCL-Revised Fee at 1–2.

[44] IMC-Revised Fee at 5–6.

[45] DMA-Revised Fee at 15. *See also* IMC-Revised Fee at 6 (suggesting the Final Fee Rule should ''allow a telemarketer to legally rely on a seller providing a working access number as conclusive proof that the seller has properly purchased access to the registry''); ARDA-Revised Fee at 3.

outbound telephone call on its behalf are violations of the Amended TSR, and subject the seller and telemarketer to all remedies available for such violations.

E. Corporate Divisions, Subsidiaries, and Affiliates

In the Revised Fee NPRM, the Commission proposed to treat each separate division, subsidiary, or affiliate of a corporation as a separate seller for purposes of Section 310.8. The Commission rejected comments suggesting that separate subsidiaries, divisions, or affiliates of the same corporation be treated as a single seller, stating that such treatment could greatly diminish the number of entities that will pay for access to the national registry, provide an unjust advantage to larger, multi-divisional corporations, and potentially increase the fees required to be paid by smaller, less complex corporate entities.

NCL agreed with the Commission's proposal, stating that allowing separate subsidiaries, divisions, and affiliates ''to be considered as one seller, even though they would likely be conducting telemarketing campaigns for quite different products or services, would create an inequitable situation for smaller companies and threaten the financial viability of the registry.''[46] On the other hand, this proposal was significantly criticized by industry commenters.[47] They noted that companies organize into affiliated entities for tax, regulatory and historical reasons, often beyond their control.[48] For example, SBC noted that due to statutory and regulatory requirements, it would be required to pay over 44 separate annual fees, even though the services provided by its separate subsidiaries and affiliates are similar and consumers have a reasonable expectation that they are dealing with one company.[49] West stated that the proposal would cause it problems, since telemarketers such as itself would need to understand the corporate divisional structure of their seller-clients, which is not always clear.[50] In addition, a number of commenters noted that this proposal appeared contrary to the Commission's assertion, stated in the Revised Fee NPRM, that the agency did not want to charge the same company multiple times for access to the national registry.[51]

Many commenters suggested, as an alternative, that the Commission should use the ''consumer expectation'' factors set forth in the Amended TSR Statement of Basis and Purpose that apply to the established business relationship exemption to determine whether separate divisions, subsidiaries, or affiliates must pay the annual fee; namely, would consumers reasonably perceive the entity as a single seller based on the nature and type of goods or services sold and the identity of the division, subsidiary or affiliate.[52] On the other hand, another commenter noted that such factors do not provide sufficient notice as to whether any particular division would be required to separately purchase access to the national registry, and that the final rule must provide ''a more definitive definition of the circumstances that would subject multiple divisions to separate fee obligations.''[53]

The Commission agrees that, for purposes of assessing a fee, the test to determine who must pay must be more specific and clear cut than the ''consumer expectation'' test established for the established business relationship exemption. The ''consumer expectation'' test works for determining whether a company has violated the established business relationship exemption because it is consumers themselves who will state, in their complaints, that they did not believe the company that called was related to the company with which they had done business in the past. There will be no such consumer arbiters to determine who should pay the fee. The Commission does agree, however, that those factors are appropriate ones to consider in determining which divisions, subsidiaries, or affiliates should pay a fee.

To develop a more bright line test for which entities must pay, while taking the consumer expectation factors into consideration, the Commission will require separate divisions, subsidiaries, or affiliates to pay a separate annual fee for access to the national registry under the following circumstances: (1) The entity is separately incorporated or, for a non-corporate entity such as a partnership, is a similarly distinct legal entity; and (2) the entity has or markets under a different name. If the name difference reflects only a geographic distinction, that will not be sufficient to require the entity to pay a separate fee for access. For example, ''ABC Marketer of Oklahoma, Inc.'' would not be considered a separate seller, for purposes of the Fee Rule, from its affiliate, ''ABC Marketer of Texas, Inc.'' On the other hand, if the name difference reflects some other distinction, such as product or service, then the separately-incorporated entity would be required to pay a separate fee for access. For example, ''John's Books and Games, Inc.'' would be considered a separate seller from its subsidiary, ''John's Computers, Inc.''[54]

IV. Calculation of Fees

A. Number of Entities Accessing the National Registry

The first step in establishing the appropriate fees to charge entities that access consumer telephone numbers included in the national registry is to estimate the number of such entities that would be required to pay the fee. In both the User Fee NPRM and the Revised Fee NPRM, the Commission acknowledged that this step is among the most difficult, given the dearth of information about the number of companies currently in the marketplace who make outbound telemarketing calls to consumers.[55] In the User Fee NPRM, the Commission determined, after examining relevant industry literature and the record in this and past TSR rulemaking proceedings, that the most pertinent information for determining the number of firms that would be required to pay the proposed user fee would be the number of firms that access state do-not-call registries. At that time, the most telemarketing firms that accessed any individual state registry was 2,932. Thus, to propose a realistic fee structure that would ensure sufficient funds would be collected to cover the costs of a national registry, the Commission estimated in the User Fee NPRM that 3,000 entities would pay for access to the information in the national registry. The Commission sought comment and evidence to determine

[46] NCL-Revised Fee at 2.

[47] *See, e.g.*, ARDA-Revised Fee at 4; BOA-Revised Fee at 2; DMA-Revised Fee at 11–12; ERA-Revised Fee at 5–6; Household-Revised Fee at 2; IMC-Revised Fee at 5; MPA-Revised Fee at 3–4; SBC-Revised Fee at 2–4; Verizon-Revised Fee at 1–4; VISA-Revised Fee at 2.

[48] *See* BOA-Revised Fee at 2; SBC Revised Fee at 2–4; VISA-Revised Fee at 2.

[49] SBC-Revised Fee at 2. See also Verizon-Revised Fee at 1–4 (Verizon includes roughly two dozen separate corporations that engage in telemarketing).

[50] West-Revised Fee at 3.

[51] *See, e.g.*, MPA-Revised Fee at 3–4; SBC-Revised Fee at 2–4.

[52] ARDA-Revised Fee at 4; ERA-Revised Fee at 5–6; MPA-Revised Fee at 3–4; SBC-Revised Fee at 2–4.

[53] BOA-Revised Fee at 2.

[54] The Commission does not believe these changes to the treatment of corporate subsidiaries and affiliates warrant any change to the estimate of the number of entities that will pay for access to the national registry, discussed below. There is no evidence on the record to indicate that the types of subsidiaries and affiliates which no longer will be considered separate sellers under the Final Fee Rule are numerous or widespread throughout the telemarketing industry.

[55] *See* User Fee NPRM, 67 FR at 37363–64, Revised Fee NPRM, 68 FR at 16241.

whether this estimate was realistic and appropriate.

Of the 34 comments received in response to the User Fee NPRM, only one commenter provided any information relevant to this inquiry, stating the number of clients for which it would have to obtain access to the national registry. In addition, a second commenter provided some company-specific information. Based on these comments, the Commission proposed a new estimate of the number of firms that will access the national registry, developed through a calculation using the limited information provided in the comments, combined with relevant industry-wide data available and the Commission's knowledge of the industry. Based on this detailed calculation, set out in the Revised Fee NPRM, the Commission estimated that the total number of firms that would access the national registry would be 7,500.[56]

As the Commission stated in the Revised Fee NPRM, this calculation made a number of significant assumptions based on the best information available to the agency at that time. The Commission asked specific questions about each of these assumptions, seeking information as to their reliability. The Commission also asked commenters to provide any information they could about any and all of these assumptions, including company-specific information and data that could help the agency to refine its estimates of the number of firms that will need to access the national registry.

Once again, the Commission received virtually no comments providing information on the validity of the Commission's assumptions. One ''leading teleservices company'' stated that one of the Commission's assumptions—sellers that use third-party telemarketers on average employ three different telemarketers to make calls to consumers over the course of a year—was ''generally accurate.'' [57] Two telemarketer commenters stated that most of their clients market nationwide.[58] Otherwise, the comments provided no information on this question whatsoever. Instead, the major industry association commenters faulted the Commission's calculations, claiming that they are ''largely without empirical foundation,'' [59] ''speculative and largely unsupported'' and ''completely arbitrary.'' [60]

As previously stated, the Commission's calculations are based on the best information available to the agency at this time. Although the Commission has requested information on this issue on a number of prior occasions, the very entities that have access to such information have rebuffed the agency at every stage. The Commission has no obligation to ''conduct a comprehensive study of the telemarketing industry'' to determine the proper fees, as suggested by the DMA.[61] In fact, it has reason to doubt such a study would be productive, given the industry's ongoing reticence in this area. The Commission has undertaken substantial efforts to determine the number of entities that will be required to access the national registry. It has scoured industry literature, reviewed and analyzed numerous rounds of comments on this issue, and used its knowledge of the industry to make basic assumptions about its operation. Given this review and analysis, and the limited information provided in the comments, the Commission continues to believe that its original estimate that 7,500 entities will be required to pay for access to the national registry is reasonable and appropriate.

However, given the new FCC Rules, additional entities, originally exempt from the Amended TSR, now will be required to access the national registry. In the Revised Fee NPRM, the Commission estimated that a total of 10,900 firms engage in outbound telemarketing to consumers.[62] The Commission reduced that number to account for firms that are engaged in charitable solicitations, firms that are calling directly from sellers exempt from FTC regulation, and firms that make only intrastate calls. Of that group, after the adoption of the FCC Rules, only firms that engage in charitable solicitations remain exempt from the requirement to access the national registry. The Commission estimates that 900 entities engage exclusively in such charitable solicitations, resulting in our revised estimate that 10,000 entities will be required to access the national registry.

B. Access by Area Code; Small Business Access

In both the User Fee NPRM and the Revised Fee NPRM, the Commission proposed a fee structure based on the number of different area codes of data that an entity wished to use annually.[63] The Commission received no comments on this issue in response to the Revised Fee NPRM. As a result, the Commission will continue to charge for access to the national registry based on the number of area codes of information an entity requests.

As for small business access to the national registry, the Commission proposed, in both the User Fee NPRM and the Revised Fee NPRM, to provide free registry access to any firm wishing to obtain data from only one to five area codes.[64] The Commission proposed such free access to limit the burden placed on small businesses that only require access to a small portion of the national registry. The Commission noted that its proposal was consistent with the mandate of the Regulatory Flexibility Act, 5 U.S.C. 601, which requires that to the extent, if any, a rule is expected to have a significant economic impact on a substantial number of small entities, agencies should consider regulatory alternatives to minimize such impact.[65] In the Revised Fee NPRM, the Commission sought comment on other alternatives that would balance the burdens faced by small businesses with the need to raise appropriate fees to fund the registry in an equitable manner, as well as on the appropriate level of free access.

The Commission received few comments in response to this proposal in the Revised Fee NPRM. NCL found the Commission's proposal ''reasonable.'' [66] S&K, on the other hand, stated that the Commission should grant access to five or maybe even ten area codes for free, and ''employ a graduated system that places the majority of the fees on the largest scale sellers or telemarketers, as determined by a mixture of revenues, profits, subsidiaries and overall cost structure.'' [67] In contrast, ATA contended that the proposed fee was unconstitutional precisely because it would impose differential treatment, shift the burden to certain sellers to pay for fees in excess of the benefits they would receive, and thus target and penalize the largest entities more than simply favor small businesses.[68] ATA

[56] *See* Revised Fee NPRM, 68 FR at 16241–42.

[57] IMC-Revised Fee at 1, 4.

[58] Id. at 4–5; West-Revised Fee at 3.

[59] DMA-Revised Fee at 8.

[60] ERA-Revised Fee at 7–8. See also MPA-Revised Fee at 6.

[61] DMA-Revised Fee at 8–10.

[62] *See* Revised Fee NPRM, 68 FR at 16242.

[63] *See* User Fee NPRM, 67 FR at 37364; Revised Fee NPRM, 68 FR at 16242.

[64] *See* User Fee NPRM, 67 FR at 37364; Revised Fee NPRM, 68 FR at 16243–44.

[65] *See also* Section VII, below, where the Commission determines that the instant proposed Rule would not have a significant economic impact on a substantial number of small entities.

[66] NCL-Revised Fee at 2.

[67] S&K-Revised Fee at 2.

[68] ATA-Revised Fee at 10–11.

also expressly warned that a fee justified largely by the gross revenue of paying sellers would not survive judicial scrutiny.[69] ARDA suggested that the Commission should make access to the first five area codes free for all sellers. According to ARDA, the ''small business that purchases that sixth area code is punished by having to pay for the first five. The small-to-medium business would be less inclined to circumvent the fee requirement if it were only required to pay an incremental cost ($29) for the sixth and seventh and so forth area codes rather than $174 for one additional area code.'' [70]

After evaluating all of the comments received in this proceeding, the Commission continues to believe that providing access to five area codes of data for free is an appropriate compromise between the goals of equitably and adequately funding the national registry, on the one hand, and providing appropriate relief for small businesses, on the other.[71] Moreover, the Commission is persuaded that it would be more equitable to provide all firms free access to up to five area codes, rather than to only those firms that access five or fewer area codes. It is true that a relatively small firm could need to access six area codes of data. It does not seem fair to charge that firm the full cost for all six area codes, simply because it needed access to one area code more than another small firm. The marginal cost of that sixth area code should not be so high. As a result, the Commission will provide the first five area codes of data from the national registry free to all entities that gain access. Section 310.8 of the Fee Rule is revised accordingly.

C. Fees for Access

As set forth in the Background Section of this Statement, both the Appropriations Act and the Implementation Act authorize the Commission to assess fees sufficient to cover the costs of implementing and enforcing the do-not-call provisions of the Amended TSR, estimated at $18.1 million for fiscal year 2003. The Commission continues to anticipate that it will need to raise the entire estimated $18.1 million authorized to cover the costs associated with those efforts in this fiscal year. A number of commenters claimed that the Commission failed to provide any indication how it intends to spend the $18.1 million, and that the costs are not justified or necessary.[72] The Commission disagrees.

As stated in the Revised Fee NPRM, costs for the National Do Not Call Registry fall primarily into three broad categories.[73] First are the actual estimated contract costs along with associated agency costs to develop and operate the national registry. This includes items such as handling consumer registration and complaints, the transfer of registration information from state lists to the registry, telemarketer access to the registry, and the management and operation of law enforcement access to appropriate information. The second category of costs relates generally to enforcement efforts. These costs will include law enforcement initiatives, both domestic and international, to identify targets and challenge alleged violators. Enforcement costs also include consumer and business education, which are critical complements to enforcement in securing compliance with the ''do-not-call'' provisions. The third category of costs covers agency infrastructure and administration costs, including information technology structural supports. In particular, the Consumer Sentinel system (the agency's repository for all consumer fraud-related complaints) and its attendant infrastructure are being upgraded to handle the anticipated increased demand from state law enforcers for access to ''do-not-call'' complaints. Further, the Consumer Sentinel system will require substantial changes so that it can handle the significant additional volume of complaints that is expected.

To raise $18.1 million this fiscal year, and assuming that 10,000 firms will pay for that access,[74] the Commission will charge an annual fee of $25 for each area code of data accessed.[75] There will be no fee charged to any entity for access to the first five area codes of data. In addition, the Commission will place a cap of $7,375 as the maximum annual fee that will be charged an entity that wants access to the entire national database. The maximum fee will now be charged for accessing 300 area codes of data or more.[76] As a result of this Fee Rule, examples of fees that will be charged for various levels of access to the national registry are as follows: obtaining up to five area codes of data would have no charge; six area codes of data would cost $25; seven area codes would cost $50; thirty area codes would cost $625; two hundred area codes would cost $4,875; and access to the data from all area codes would be capped at $7,375 annually.[77]

[69] *Id.* at 12.

[70] ARDA-Revised Fee at 6. *See also* ATA-Revised Fee at 8. The FCC Rules note that thirty-three states currently have five or fewer area codes. *See* FCC Rules at ¶ 54.

[71] The Commission continues to believe, as stated in the Revised Fee NPRM, that providing small businesses with exemptive relief more directly tied to size status would not balance the private and public interests at stake any more reasonably than the approach selected. Any reduced fee schedule based on a small business' size, revenues, or profits would require a certification and determination of that status to implement and enforce, and thus would present greater administrative, technical, and legal costs and complexities than the approach selected by the Commission, which does not require proof or verification of small business status. *See* Revised Fee NPRM, 68 FR at 16243, n.52.

[72] *See* DMA-Revised Fee at 2–6; ERA-Revised Fee at 6–7; MPA-Revised Fee at 5–6.

[73] *See* Revised Fee NPRM, 68 FR at 16244.

[74] A number of commenters continued to suggest that consumers should pay a portion of the costs to implement and operate the national registry. *See, e.g.*, ARDA-Revised Fee at 7; IMC-Revised Fee at 7; MPA-Revised Fee at 7; PDS-Revised Fee at 1–3. As stated in the User Fee NPRM, the Commission does not believe it is appropriate to charge consumers to protect their privacy from unwanted and abusive telemarketing calls. *See* User Fee NPRM, 67 FR at 37363. In addition, the Implementation Act clearly authorizes the Commission to raise the appropriate fees from the industry, and not from consumers.

[75] In the Revised Fee NPRM, the Commission assumed that, on average, sellers will pay to obtain information from 83 area codes of data in the national registry. *See* Revised Fee NPRM, 68 FR at 16244, n. 56. The addition of entities making intrastate calls will reduce the average number of area codes entities will pay to obtain from the national registry, as will our decision to allow all entities to obtain five area codes of data for free. As a result, the Commission is now estimating that the average entity accessing the national registry will purchase 73 area codes of data.

[76] The Commission is capping the maximum amount that will be charged for access to the entire national registry to ease the administrative burdens of operating the system and those faced by the largest users of the registry. There are currently 317 area codes included in the national registry, and more area codes are added on an irregular schedule. If there were no maximum fee for access to the national registry, every time a new area code were added, all entities that had paid for access to the entire database would be required to pay an additional fee prior to being able to download the national list. The Commission does not consider the limited additional fees that such a requirement would generate to outweigh this burden. More limited users, on the other hand, who have asked for a specific list of area codes of data, will need to change the scope of their access if they wish to obtain any newly added area codes. Because they already will be asking for a change in their access rights, it will be less of an administrative burden to charge those entities for the additional area codes. Thus, contrary to ATA's suggestion, the cap in the proposed fee structure is sufficiently related to a consideration of the actual administrative costs of the registry to justify its use. *See* ATA-Revised Fee at 9.

[77] DMA contends that while ''a nominal fee unrelated to content of the speech may be permissible under certain circumstances,''. . . ''a much lower fee [than the Commission has proposed] is also needed to conform with Supreme Court First Amendment jurisprudence on monetary restrictions on speech.'' DMA-Revised Fee at 1–2, 6–7. *See also* ATA-Revised Fee at 15. Contrary to the DMA's comment, the fee need not be ''nominal'' so long as it is related sufficiently to the costs of administration and enforcement. Moreover, ''[n]ominal is necessarily a relative term, to be judged by how substantial something is when

Continued

As stated above and in the Revised Fee NPRM, these fees are based on certain assumptions and estimates. The Commission anticipates that these fees may need to be reexamined periodically and adjusted, in future rulemaking proceedings, to reflect actual experience with operating the registry.

V. Operation of the National Registry for the Telemarketing Industry

The Commission is developing a fully-automated, secure website dedicated to providing members of the telemarketing industry with access to the registry's list of telephone numbers, sorted by area code. The first time an entity accesses the system, it will be asked to provide certain limited identifying information, such as company name and address, company contact person, and the contact person's telephone number and email address. If an entity is accessing the registry on behalf of a seller-client, the entity also will need to identify that client.

The only consumer information that companies will receive from the national registry is a registrant's telephone number. Those telephone numbers will be sorted and available by area code. Companies will be able to access as many area codes as desired, by selecting, for example, all area codes within a certain state. Of course, companies also will be able to access the entire national registry, if desired. In addition, after providing the required identifying information and paying the appropriate fee, if any, companies will be allowed to check, via interactive Internet pages, a small number of telephone numbers (less than ten) at a time to permit small volume callers to comply with the national registry requirements of the TSR without having to download a potentially large list of all registered telephone numbers within a particular area.

As previously stated, sellers, telemarketers and other service providers will be allowed to access the national registry. When a seller first submits an application to access registry information, the company will be asked to specify the area codes that it wants to access. As discussed above, each seller accessing the registry data will be required to pay an annual fee, based on the number of area codes of data the seller accesses. Fees will be payable via credit card (which will permit the real-time transfer of data) or electronic funds transfer (which will require the seller to wait approximately three days for the funds to clear before data access will be provided). A seller must pay these fees prior to gaining access to the registry, and may do so either directly or through another entity to which the seller has provided the necessary authority.

Sellers will be able to access data as often as they like during the course of one year (defined as their ''annual period'') for those area codes for which they have paid. However, to protect system integrity, an account number will support a download of the entire national registry only once in any 24-hour period. If, during the course of their annual period, sellers need to access data from more area codes than those initially selected, they would be required to pay for access to those additional area codes. For purposes of these additional payments, the annual period is divided into two semi-annual periods of six months each. Obtaining additional data from the registry during the first semi-annual, six month period will require a payment of $25 for each new area code. During the second semi-annual, six month period, the charge of obtaining data from each new area code requested during that six-month period is $15. These payments for additional data would provide sellers access to those additional areas of data for the remainder of their annual term.

After payment is processed, the seller will be given a unique account number and permitted access to the appropriate portions of the registry. That account number will be used in future visits to the website, to shorten the time needed to gain access. On subsequent visits to the website, sellers will be able to download either a full updated list of numbers from their selected area codes, or a more limited list, consisting only of changes to the registry that have occurred since the company's last download. This would limit the amount of data that a company needs to download during each visit.

Telemarketers and other service providers working on behalf of sellers may obtain access to the registry either directly or through the use of their seller-client's unique account number. If access is gained directly, *i.e.*, the telemarketer or service provider decides to obtain the information on its own behalf, either voluntarily or to satisfy other legal requirements, that telemarketer or service provider will need to comply with all requirements placed on sellers accessing the registry, as previously discussed in this Section. Such telemarketers and service providers will be provided a unique account number that can be used only by that company, *i.e.*, that account number will not authorize other companies to access the registry on behalf of the telemarketer or service provider. On the other hand, if telemarketers or service providers are accessing the registry through the use of their seller-client's account number, the extent of their access will be limited to the area codes requested and paid for by their seller-clients. They also will be permitted to access the registry as often as they wish for no additional cost, once the annual fee has been paid by their seller-clients.[78] As indicated in the Rule NPRM discussion of Section 310.4(b)(3)(iv), however, the Rule requires a seller or telemarketer to employ a version of the do-not-call registry obtained from the Commission no more than three months prior to the date any telemarketing call is made.

Data will be available from the national registry using Internet-based formats and download methods that serve both small and large businesses. Data also will be available in three different sets: full lists, change lists, and small list lookups. For the full lists and the change lists, downloads may be accomplished via a web browser or a programmatic web service. For the small list lookup, a web page will allow a person to enter from one to ten telephone numbers on a form. After entering the numbers and clicking a button, the national registry will display on the web page the list of numbers entered and whether each number is in the national registry or not.

With a web browser, a person will access a secure web page that will allow the person to select: a national download (all area codes), all area codes from individual states, or individual area codes.[79] After selecting the area codes, the person will choose a flat text file or an XML tagged data file. The person also will choose a zipped or unzipped file. After making these selections, the person will click a ''download'' button and be prompted to save the file to his or her company computer. If the person chooses the full list, the flat file will contain just ten-digit telephone numbers, with a single

viewed in its context.'' *National Awareness Foundation* v. *Abrams,* 812 F.Supp. 431, 433 (S.D.N.Y. 1994), *aff'd* 50 F.3d 1159 (2d Cir. 1995). The Commission believes that the $25 fee per area code is nominal, as is the maximum fee of $7,375 for nationwide access, when considered in the context of an annual fee for members of the telemarketing industry engaged in commercial speech. Cf. *Cox* v. *New Hampshire,* 312 U.S. 569, 577 (1949)(upholding a fee up to $300, in 1938 dollars, for a one-day permit to engage in fully protected speech).

[78] Telemarketers and service providers working on behalf of sellers also will be limited to downloading the entire national registry only once in any 24-hour period.

[79] When new area codes are added, the ''by state'' display temporarily will show a new area code proximate to but separate from its state, to ensure that the new area code has been paid for.

number on each line. For the change list in flat file format, each line of the file will contain a telephone number, the date of the change, and an ''A'' (for Added) or ''D'' (for Deleted). The change list data will be fixed-width fields.

The alternative to web browser downloads will be programmatic web services using XML tagged data. This will assist larger companies in automating downloads of the national registry. The XML tags will include the following: a login and encrypted password; the name and email address of the company contact person; certification that access to the registry is solely to comply with the provisions of this Rule; the account number(s) for which the download is being performed; the area code of the telephone numbers to be downloaded; and whether a full list or change list is to be downloaded.

Entities that select a change list will be provided all telephone numbers that have been added to, or deleted from, the registry since the date of their previous access. Change lists, for both flat files and XML tagged data, will be available to provide changes on a daily basis (representing the additions and deletions from the day before).

The telemarketer website on the national registry will have a help desk available during regular business hours via a secure electronic form.

VI. Paperwork Reduction Act

Pursuant to the Paperwork Reduction Act, 44 U.S.C. 3501 *et seq.* (''PRA''), the Commission sought public comments on the information collection activities contained in the Final Fee Rule. *See* 67 FR 37362 (May 29, 2002); 68 FR 16238 (April 3, 2003). The Commission received no comments on its PRA analysis nor has it modified its proposal in any manner that necessitates revising its original burden estimates for the Final Fee Rule.[80] The Commission additionally sought clearance from OMB for those information collection requirements, and obtained it on July 24, 2003, under OMB Control No. 3084–0097.

[80] While the Commission is increasing its estimate of the number of entities that must pay for access to the national registry, that increase is created by the FCC Rules, which require entities exempt from the FTC's jurisdiction to gain access. Accordingly, the paperwork burden faced by those entities will be reported by the FCC, rather than the FTC. In addition, entities that access the national registry solely because of the FCC Rules are not required to comply with the recordkeeping provisions of the Amended TSR. As a result, the increase in the Commission's estimate of the number of entities required to access the national registry does not affect that aspect of the Commission's prior PRA burden estimates.

VII. Regulatory Flexibility Act

The Regulatory Flexibility Act (''RFA''), 5 U.S.C. 601 *et seq.*, requires the agency to provide an Initial Regulatory Flexibility Analysis (''IRFA'') with its proposed rule, and a Final Regulatory Flexibility Analysis (''FRFA'') with its final rule, unless the agency certifies that the rule will not have a significant economic impact on a substantial number of small entities. As explained in the User Fee NPRM, the Revised Fee NPRM, and this Statement, the Commission does not expect that its Fee Rule will have the threshold impact on small entities. Nonetheless, the Commission published an IRFA with the User Fee NPRM, and is also publishing a FRFA with its Final Fee Rule below, in the interest of further explaining its determination, even though the Commission continues to believe that it is not required to publish such analyses.

1. Reasons for Consideration of Agency Action

The Final Fee Rule has been considered and adopted pursuant to the requirements of the Implementation Act and the Appropriations Act, which authorize the Commission to collect fees sufficient to implement and enforce the ''do-not-call'' provisions of the Amended TSR.

2. Objectives of and Legal Basis for the Final Rule

As explained above, the objective of the Final Fee Rule is to collect fees from entities engaged in telemarketing, pursuant to the legal authority set forth in the Implementation Act and Appropriations Act.

3. Description and Estimate of Number of Small Entities Affected by the Final Rule

As explained in the Revised Fee NPRM, comments submitted by the Small Business Administration cited to information from the North American Industry Classification System (''NAICS''), suggesting that there are 2,305 firms identified as ''telemarketing bureaus,'' and that 1,279 of those firms may qualify for small business status, *i.e.*, annual receipts of $5 million or less.[81] Because sellers, and not ''telemarketing bureaus,'' constituted the relevant small entities affected by the Revised Fee NPRM, the Commission sought further public comment and information on the number of small business sellers engaged in outbound telemarketing and subject to the FTC's jurisdiction, since the NAICS classification system does not provide this level of detail.[82] The Commission received no further information in response to this request for comment. As a result, the agency is unable at this time to provide a reliable estimate of the number of affected sellers. In any event, as explained elsewhere in this Statement, the Commission believes that, to the extent the Final Fee Rule has an economic impact on small business, the Commission has adopted an approach that minimizes that impact to ensure that it is not substantial, while fulfilling the legal mandate of the Implementation Act and Appropriations Act to ensure that the telemarketing industry supports the cost of the National Do Not Call Registry.

[81] *See* 68 FR at 16246 n.65.

4. Description of Projected Reporting, Recordkeeping, and Other Compliance Requirements for Small Entities

These requirements were discussed in the Revised Fee NPRM section regarding agency information collection activities subject to OMB approval under the PRA.[83] The information collection activities at issue consist principally of the requirement that firms, regardless of size, that access the national registry submit minimal identifying and payment information, which is necessary for the agency to collect the required fees.

Compliance requirements of the Final Fee Rule, other than information collection requirements within the meaning of the PRA, are discussed elsewhere in this document and in the User Fee NPRM and Revised Fee NPRM. In sum, as noted earlier, small entities and all other entities subject to the Final Fee Rule are required to pay and obtain access to the National Do Not Call Registry in order to reconcile their calling lists with the phone numbers maintained in the national registry.

5. Duplication With Other Federal Rules

None.

6. Description of Any Significant Alternatives to the Final Rule

As discussed in the User Fee NPRM, the Commission considered a number of alternatives to the proposed fees.[84] In both the User Fee NPRM and Revised Fee NPRM, the Commission solicited comment on any significant alternatives that would further minimize the impact on small entities consistent with the objectives stated in those Notices, the Appropriations Act and the Implementation Act. As discussed

[82] *Id.*

[83] *See* Revised Fee NPRM, 68 FR at 16245.

[84] *See* User Fee NPRM, 67 FR at 37367.

elsewhere in this Statement, the Commission finds that no significant alternatives are available consistent with those objectives.

List of Subjects in 16 CFR Part 310

Telemarketing, Trade practices.

VIII. Final Rule

■ Accordingly, for the reasons set forth above, the Commission hereby amends part 310 of title 16 of the Code of Federal Regulations as follows:

PART 310—TELEMARKETING SALES RULE

■ 1. The authority citation for part 310 continues to read as follows:

Authority: 15 U.S.C. 6101–6108.

■ 2. Add § 310.8 to read as follows:

§ 310.8 Fee for access to the National Do Not Call Registry.

(a) It is a violation of this Rule for any seller to initiate, or cause any telemarketer to initiate, an outbound telephone call to any person whose telephone number is within a given area code unless such seller, either directly or through another person, first has paid the annual fee, required by § 310.8(c), for access to telephone numbers within that area code that are included in the National Do Not Call Registry maintained by the Commission under § 310.4(b)(1)(iii)(B); *provided*, however, that such payment is not necessary if the seller initiates, or causes a telemarketer to initiate, calls solely to persons pursuant to §§ 310.4(b)(1)(iii)(B)(*i*) or (*ii*), and the seller does not access the National Do Not Call Registry for any other purpose.

(b) It is a violation of this Rule for any telemarketer, on behalf of any seller, to initiate an outbound telephone call to any person whose telephone number is within a given area code unless that seller, either directly or through another person, first has paid the annual fee, required by § 310.8(c), for access to the telephone numbers within that area code that are included in the National Do Not Call Registry; *provided*, however, that such payment is not necessary if the seller initiates, or causes a telemarketer to initiate, calls solely to persons pursuant to §§ 310.4(b)(1)(iii)(B)(*i*) or (*ii*), and the seller does not access the National Do Not Call Registry for any other purpose.

(c) The annual fee, which must be paid by any person prior to obtaining access to the National Do Not Call Registry, is $25 per area code of data accessed, up to a maximum of $7,375; *provided*, however, that there shall be no charge for the first five area codes of data accessed by any person, and *provided further*, that there shall be no charge to any person engaging in or causing others to engage in outbound telephone calls to consumers and who is accessing the National Do Not Call Registry without being required under this Rule, 47 CFR 64.1200, or any other federal law. Any person accessing the National Do Not Call Registry may not participate in any arrangement to share the cost of accessing the registry, including any arrangement with any telemarketer or service provider to divide the costs to access the registry among various clients of that telemarketer or service provider.

(d) After a person, either directly or through another person, pays the fees set forth in § 310.8(c), the person will be provided a unique account number which will allow that person to access the registry data for the selected area codes at any time for twelve months following the first day of the month in which the person paid the fee (''the annual period''). To obtain access to additional area codes of data during the first six months of the annual period, the person must first pay $25 for each additional area code of data not initially selected. To obtain access to additional area codes of data during the second six months of the annual period, the person must first pay $15 for each additional area code of data not initially selected. The payment of the additional fee will permit the person to access the additional area codes of data for the remainder of the annual period.

(e) Access to the National Do Not Call Registry is limited to telemarketers, sellers, others engaged in or causing others to engage in telephone calls to consumers, service providers acting on behalf of such persons, and any government agency that has law enforcement authority. Prior to accessing the National Do Not Call Registry, a person must provide the identifying information required by the operator of the registry to collect the fee, and must certify, under penalty of law, that the person is accessing the registry solely to comply with the provisions of this Rule or to otherwise prevent telephone calls to telephone numbers on the registry. If the person is accessing the registry on behalf of sellers, that person also must identify each of the sellers on whose behalf it is accessing the registry, must provide each seller's unique account number for access to the national registry, and must certify, under penalty of law, that the sellers will be using the information gathered from the registry solely to comply with the provisions of this Rule or otherwise to prevent telephone calls to telephone numbers on the registry.

By direction of the Commission.

Donald S. Clark,

Secretary.

Note: The following appendix will not appear in the Code of Federal Regulations.

Appendix A

List of Acronyms for the TSR Revised Fee Proposal Commenters

Commenter—Acronym
American Bankers Association—ABA
American Resort Development Association—ARDA
American Teleservices Association—ATA
Bahe, Kevin—KB
Bank of America—BOA
Bouffard, David L.—DB
Brown, Jarrett—JB
Citigroup Inc.—Citi
Convergys Corporation—Convergys
Direct Marketing Association—DMA
Electronic Retailing Association—ERA
Financial Services Roundtable—FSR
Girty, John—JG
Goldstein, Mitchell P.—MG
Greene, Shawn—SG
Household Bank (SB), N.A.—Household
Infocision Management Corporation—IMC
Jamtgaard, O. G. Jr.—OJ
Johnson, Jeff—JJ
Lamonds, Cheryl E.—CL
Magazine Publishers of America—MPA
McGowan, Dilton—DM
National Consumers League—NCL
Phone Data Strategies—PDS
Pressley, Bob—BP
Samuels, Sara—SS
SBC Communications Inc.—SBC
Scheid, Justin & Matt Kiverts—S&K
Scott, Richey L.—RS
Smith, Jenna—JS
Stora, Christine—CS
Stutes, Gerald—GS
The Verizon companies—Verizon
VISA U.S.A.—VISA
West Corporation—West

[FR Doc. 03–19568 Filed 7–30–03; 8:45 am]

BILLING CODE 6750–01–P

Federal Register

Thursday,
July 31, 2003

Part VII

The President

Proclamation 7694—Death of Bob Hope

Executive Order 13311—Homeland Security Information Sharing

Executive Order 13312—Implementing the Clean Diamond Trade Act

Federal Register
Vol. 68, No. 147
Thursday, July 31, 2003

Presidential Documents

Title 3—

The President

Proclamation 7694 of July 28, 2003

Death of Bob Hope

By the President of the United States of America

A Proclamation

Today, America mourns the loss of one of its great treasures. A gifted comedian who entertained audiences for decades with his unique talents, Bob Hope brought joy and laughter to our Nation. By tirelessly entertaining America's troops, he demonstrated his extraordinary love of country and devotion to the men and women who have served in our military.

As a mark of respect for the memory of Bob Hope, I hereby order, by the authority vested in me as President of the United States by the Constitution and the laws of the United States of America, that on the day of his interment, the flag of the United States shall be flown at half-staff at the White House and upon all public buildings and grounds, at all military posts and naval stations, and on all naval vessels of the Federal Government in the District of Columbia and throughout the United States and its Territories and possessions until sunset on such day. I also direct that the flag shall be flown at half-staff for the same period at all United States embassies, legations, consular offices, and other facilities abroad, including all military facilities and naval vessels and stations.

IN WITNESS WHEREOF, I have hereunto set my hand this twenty-eighth day of July, in the year of our Lord two thousand three, and of the Independence of the United States of America the two hundred and twenty-eighth.

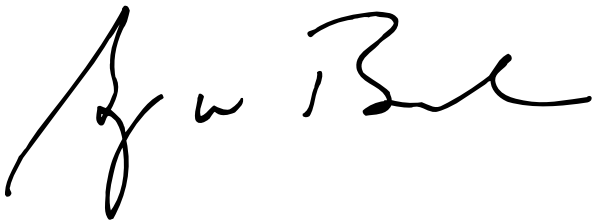

[FR Doc. 03–19674
Filed 7–30–03; 9:18 am]
Billing code 3195–01–P

Presidential Documents

Executive Order 13311 of July 29, 2003

Homeland Security Information Sharing

By the authority vested in me by the Constitution and the laws of the United States, including sections 892 and 893 of the Homeland Security Act of 2002 (the ''Act'') (6 U.S.C. 482 and 483) and section 301 of title 3, United States Code, it is hereby ordered as follows:

Section 1. *Assignment of Functions.* (a) The functions of the President under section 892 of the Act are assigned to the Secretary of Homeland Security (the ''Secretary''), except the functions of the President under subsections 892(a)(2) and 892(b)(7).

(b) Subject to section 2(b) of this order, the function of the President under section 893 of the Act is assigned to the Secretary.

(c) Procedures issued by the Secretary in the performance of the function of the President under section 892(a)(1) of the Act shall apply to all agencies of the Federal Government. Such procedures shall specify that the President may make, or may authorize another officer of the United States to make, exceptions to the procedures.

(d) The function of the President under section 892(b)(7) of the Act is delegated to the Attorney General and the Director of Central Intelligence, to be exercised jointly.

(e) In performing the functions assigned to the Secretary by subsection (a) of this section, the Secretary shall coordinate with the Secretary of State, the Secretary of Defense, the Attorney General, the Secretary of Energy, the Director of the Office of Management and Budget, the Director of Central Intelligence, the Archivist of the United States, and as the Secretary deems appropriate, other officers of the United States.

(f) A determination, under the procedures issued by the Secretary in the performance of the function of the President under section 892(a)(1) of the Act, as to whether, or to what extent, an individual who falls within the category of ''State and local personnel'' as defined in sections 892(f)(3) and (f)(4) of the Act shall have access to information classified pursuant to Executive Order 12958 of April 17, 1995, as amended, is a discretionary determination and shall be conclusive and not subject to review or appeal.

Sec. 2. *Rules of Construction.* Nothing in this order shall be construed to impair or otherwise affect:

(a) the authority of the Director of Central Intelligence under section 103(c)(7) of the National Security Act of 1947, as amended (50 U.S.C. 403–3(c)(7)), to protect intelligence sources and methods from unauthorized disclosure;

(b) the functions of the Director of the Office of Management and Budget relating to budget, administrative, or legislative proposals; or

(c) the provisions of Executive Orders 12958 of April 17, 1995, as amended, and 12968 of August 2, 1995, as amended.

Sec. 3. *General Provision.* This order is intended only to improve the internal management of the Federal Government and is not intended to, and does not, create any right or benefit, substantive or procedural, enforceable at law or in equity, against the United States, its departments, agencies, or other entities, its officers or employees, or any other person.

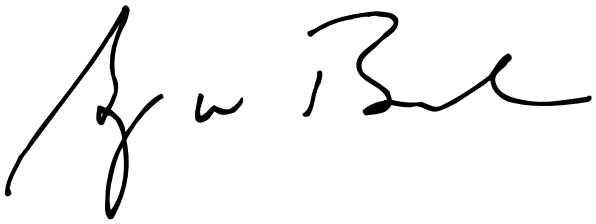

THE WHITE HOUSE,
July 29, 2003.

[FR Doc. 03–19675
Filed 7–30–03; 9:18 am]
Billing code 3195–01–P

Presidential Documents

Executive Order 13312 of July 29, 2003

Implementing the Clean Diamond Trade Act

By the authority vested in me as President by the Constitution and the laws of the United States of America, including the Clean Diamond Trade Act (Public Law 108–19) (the ''Act''), the International Emergency Economic Powers Act, as amended (50 U.S.C. 1701 *et seq.*), the National Emergencies Act (50 U.S.C. 1601 *et seq.*), section 5 of the United Nations Participation Act, as amended (22 U.S.C. 287c), and section 301 of title 3, United States Code, and in view of the national emergency described and declared in Executive Order 13194 of January 18, 2001, and expanded in scope in Executive Order 13213 of May 22, 2001,

I, GEORGE W. BUSH, President of the United States of America, note that, in response to the role played by the illicit trade in diamonds in fueling conflict and human rights violations in Sierra Leone, the President declared a national emergency in Executive Order 13194 and imposed restrictions on the importation of rough diamonds into the United States from Sierra Leone. I expanded the scope of that emergency in Executive Order 13213 and prohibited absolutely the importation of rough diamonds from Liberia. I further note that representatives of the United States and numerous other countries announced in the Interlaken Declaration of November 5, 2002, the launch of the Kimberley Process Certification Scheme (KPCS) for rough diamonds, under which Participants prohibit the importation of rough diamonds from, or the exportation of rough diamonds to, a non-Participant and require that shipments of rough diamonds from or to a Participant be controlled through the KPCS. The Clean Diamond Trade Act authorizes the President to take steps to implement the KPCS. Therefore, in order to implement the Act, to harmonize Executive Orders 13194 and 13213 with the Act, to address further threats to international peace and security posed by the trade in conflict diamonds, and to avoid undermining the legitimate diamond trade, it is hereby ordered as follows:

Section 1. *Prohibitions.* Notwithstanding the existence of any rights or obligations conferred or imposed by any contract entered into or any license or permit granted prior to July 30, 2003, the following are, except to the extent a waiver issued under section 4(b) of the Act applies, prohibited:

(a) the importation into, or exportation from, the United States on or after July 30, 2003, of any rough diamond, from whatever source, unless the rough diamond has been controlled through the KPCS;

(b) any transaction by a United States person anywhere, or any transaction that occurs in whole or in part within the United States, that evades or avoids, or has the purpose of evading or avoiding, or attempts to violate, any of the prohibitions set forth in this section; and

(c) any conspiracy formed to violate any of the prohibitions of this section.

Sec. 2. *Assignment of Functions.* (a) The functions of the President under the Act are assigned as follows:

(i) sections 4(b), 5(c), 6(b), 11, and 12 to the Secretary of State; and

(ii) sections 5(a) and 5(b) to the Secretary of the Treasury.

(b) The Secretary of State and the Secretary of the Treasury may reassign any of these functions to other officers, officials, departments, and agencies within the executive branch, consistent with applicable law.

(c) In performing the function of the President under section 11 of the Act, the Secretary of State shall establish the coordinating committee as part of the Department of State for administrative purposes only, and shall, consistent with applicable law, provide administrative support to the coordinating committee. In the performance of functions assigned by subsection 2(a) of this order or by the Act, the Secretary of State, the Secretary of the Treasury, and the Secretary of Homeland Security shall consult the coordinating committee, as appropriate.

Sec. 3. *Amendments to Related Executive Orders.* (a) Section 1 of Executive Order 13194 of January 18, 2001, is revised to read as follows:

''**Section 1.** Except to the extent provided by section 2 of this order, and notwithstanding the existence of any rights or obligations conferred or imposed by any contract entered into or any license or permit granted prior to the effective date of this order, the importation into, or exportation from, the United States of any rough diamond from Sierra Leone, on or after July 30, 2003, is prohibited.''

(b) Section 2 of Executive Order 13194 is revised to read as follows: ''**Sec. 2.** The prohibitions in section 1 of this order shall not apply to the importation or exportation of any rough diamond that has been controlled through the Kimberley Process Certification Scheme.''

(c) Sections 4(c), (d), and (e) of Executive Order 13194 are deleted, and the word ''and'' is added after the semicolon at the end of section 4(a).

(d) Section 1 of Executive Order 13213 of May 22, 2001, is revised to read as follows: ''**Section 1.** Notwithstanding the existence of any rights or obligations conferred or imposed by any contract entered into or any license or permit granted prior to the effective date of this order, the direct or indirect importation into the United States of all rough diamonds from Liberia, whether or not such diamonds originated in Liberia, on or after July 30, 2003, is prohibited.''

Sec. 4. *Definitions.* For the purposes of this order and Executive Order 13194, the definitions set forth in section 3 of the Act shall apply, and the term ''Kimberley Process Certification Scheme'' shall not be construed to include any changes to the KPCS after April 25, 2003.

Sec. 5. *General Provisions.* This order is not intended to, and does not, create any right or benefit, substantive or procedural, enforceable at law or in equity by any party against the United States, its departments, agencies, instrumentalities or entities, its officers or employees, or any other person.

Sec. 6. *Effective Date and Transmittal.* (a) Sections 1 and 3 of this order are effective at 12:01 a.m. eastern daylight time on July 30, 2003. The remaining provisions of this order are effective immediately.

(b) This order shall be transmitted to the Congress and published in the **Federal Register**.

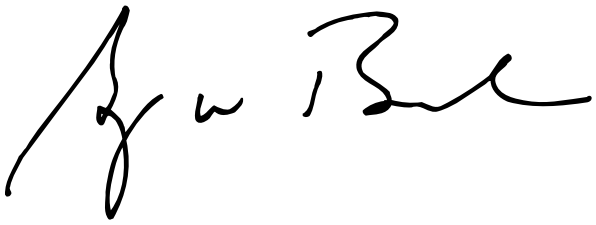

THE WHITE HOUSE,
July 29, 2003.

[FR Doc. 03–19676
Filed 7–30–03; 9:18 am]
Billing code 3195–01–P

Federal Register

Thursday,
July 31, 2003

Part VIII

The President

Memorandum of July 8, 2003—Delegation of Authority Under Section 204(a) of the Notification and Federal Employee Antidiscrimination Act of 2002 (Public Law 107–174)

Federal Register
Vol. 68, No. 147
Thursday, July 31, 2003

Presidential Documents

Title 3—

The President

Memorandum of July 8, 2003

Delegation of Authority Under Section 204(a) of the Notification and Federal Employee Antidiscrimination and Retaliation Act of 2002 (Public Law 107–174)

Memorandum for the Director of the Office of Personnel Managment

By the authority vested in me by the Constitution and the laws of the United States, including section 301 of title 3, United States Code, I hereby delegate to the Director of the Office of Personnel Management (OPM) the authority vested in the President by section 204(a) of the Notification and Federal Employee Antidiscrimination and Retaliation Act of 2002 (the ''Act'') (Public Law 107–174). The Director of OPM shall ensure that rules, regulations, and guidelines issued in the exercise of such authority take appropriate account of the needs of executive agencies in the accomplishment of their respective missions, specifically including the specialized needs of agencies with diplomatic, military, intelligence, law enforcement, security, and protective missions. The Director shall consult the Attorney General and such other officers of the executive branch as the Director of OPM may determine appropriate in the exercise of authority delegated by this memorandum.

This memorandum is intended to improve the internal management of the Federal Government and is not intended to, and does not, create any right or benefit, substantive or procedural, enforceable at law or equity or otherwise against the United States, its departments, agencies, instrumentalities, entities, officers or employees, or any other person.

You are authorized and directed to publish this memorandum in the **Federal Register**.

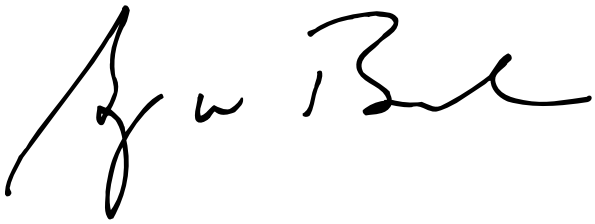

THE WHITE HOUSE,
Washington, July 8, 2003.

[FR Doc. 03–19706
Filed 7–30–03; 11:27 am]
Billing code 6325–48–P

Reader Aids

Federal Register

Vol. 68, No. 147

Thursday, July 31, 2003

CUSTOMER SERVICE AND INFORMATION

Federal Register/Code of Federal Regulations	
General Information, indexes and other finding aids	**202–741–6000**
Laws	**741–6000**
Presidential Documents	
Executive orders and proclamations	**741–6000**
The United States Government Manual	**741–6000**
Other Services	
Electronic and on-line services (voice)	**741–6020**
Privacy Act Compilation	**741–6064**
Public Laws Update Service (numbers, dates, etc.)	**741–6043**
TTY for the deaf-and-hard-of-hearing	**741–6086**

ELECTRONIC RESEARCH

World Wide Web

Full text of the daily Federal Register, CFR and other publications is located at: **http://www.access.gpo.gov/nara**

Federal Register information and research tools, including Public Inspection List, indexes, and links to GPO Access are located at: **http://www.archives.gov/federal__register/**

E-mail

FEDREGTOC-L (Federal Register Table of Contents LISTSERV) is an open e-mail service that provides subscribers with a digital form of the Federal Register Table of Contents. The digital form of the Federal Register Table of Contents includes HTML and PDF links to the full text of each document.

To join or leave, go to **http://listserv.access.gpo.gov** and select *Online mailing list archives, FEDREGTOC-L, Join or leave the list (or change settings);* then follow the instructions.

PENS (Public Law Electronic Notification Service) is an e-mail service that notifies subscribers of recently enacted laws.

To subscribe, go to **http://listserv.gsa.gov/archives/publaws-l.html** and select *Join or leave the list* (or change settings); then follow the instructions.

FEDREGTOC-L and **PENS** are mailing lists only. We cannot respond to specific inquiries.

Reference questions. Send questions and comments about the Federal Register system to: **info@fedreg.nara.gov**

The Federal Register staff cannot interpret specific documents or regulations.

FEDERAL REGISTER PAGES AND DATE, JULY

39005–39446 1
39447–39804 2
39805–40114 3
40115–40468 7
40469–40750 8
40751–41050 9
41041–41218 10
41219–41518 11
41519–41680 14
41681–41900 15
41901–42240 16
42241–42562 17
42563–42942 18
42943–43284 21
43285–43454 22
43455–43612 23
43613–43900 24
43901–44190 25
44191–44450 28
44451–44608 29
44609–44856 30
44857–45156 31

CFR PARTS AFFECTED DURING JULY

At the end of each month, the Office of the Federal Register publishes separately a List of CFR Sections Affected (LSA), which lists parts and sections affected by documents published since the revision date of each title.

3 CFR

Proclamations:
7688 39793
7689 39795
7690 40115
7691 43455
7692 44449
7693 44849
7694 45147

Executive Orders:
12958 (See EO 13311) 45149
12968 (See EO 13311) 45149
12994 (Amended by 13309) 44851
13047 (Amended by 13310) 44853
13194 (Amended by: EO 13312).....45151
13213 (Amended by: EO 13312).....45151
13309 44851
13310 44853
13311 45149
13312 45151

Administrative Orders:
Memorandum of July 8, 2003 45155
Presidential Determinations:
No. 2003–27 of June 30, 2003 41219

4 CFR

Proposed Rules:
27 41742
28 41742
29 41742

5 CFR

2600 41681

Proposed Rules:
212 44902
595 44489

6 CFR

Proposed Rules:
25 41420

7 CFR

54 39805
278 41051
279 41051
301 .....43285, 43286, 43613
400 43457
407 43457
457 43457
652 40751
718 39447
920 44191
925 41683
948 40117
989 .....41686, 42943, 44857
993 .....40754, 43614
999 43614
1405 39447
1487 42563

Proposed Rules:
301 40534
331 43660
373 40541
457 44668
868 42644
905 44237
922 43975
923 43975
924 43975
930 43978
948 .....43031, 44239
958 40815
987 44241
991 44244
1150 39861
1580 39478
2903 41751
3015 41947
3019 41947
3020 41947

8 CFR

103 43901
212 43901
214 43901
245 43901
248 43901
299 43901

9 CFR

53 42565
77 43618
319 44859

Proposed Rules:
60 40541
130 .....40817, 43661

10 CFR

50 40469
72 42570
95 41221
110 44870

Proposed Rules:
2 40026
20 40026
21 40026
34 41757
50 .....40026, 41963, 43673, 44672
51 40026
52 40026
72 .....40026, 42646
73 40026
140 40026
170 40026
Ch. II 40553

Ch. III 40553
Ch. X....40553

12 CFR

201....41054
225....39807, 41901
910....39810
913....39810

Proposed Rules:

Ch. 7 39863
613....44490
701....39866
745....39868
900....39027
932....39027
955....39027

13 CFR

121....39448

Proposed Rules:

120....40553
121....40820, 43981

14 CFR

21....43883
23....40757
25 ....40478, 43287, 45046
36....43883
39 ....39449, 39815, 40478, 40481, 40483, 40484, 40487, 40759, 41055, 41056, 41059, 41063, 41210, 41519, 41521, 41861, 41901, 41903, 41906, 42241, 42242, 42244, 42573, 42577, 42578, 42580, 42581, 42583, 42948, 42950, 42952, 42954, 42956, 42957, 42958, 43260, 43621, 44196, 44197, 44385, 44609, 44610, 44871
71 ....40761, 40762, 40763, 40764, 40765, 41691, 41692, 41693, 41694, 41695, 41696, 42246, 42962, 43292, 43293, 43477, 43921, 44199, 44200, 44201, 44202, 44451, 44452, 44453, 44454, 44874, 44875
73....42963
91 ....41212, 43883, 45046
93....41212
95....44611
97 ....41523, 41525, 44203, 44205
119....41214
121 ....41214, 42874, 42832, 45046
125....42832, 45046
129....42874
135 ....41214, 42832, 45046
330....44455
382....40488
399....43882

Proposed Rules:

21....43885
23....42315
39 ....39483, 39485, 39870, 40573, 40821, 40823, 40827, 40829, 40831, 40834, 41760, 41762, 41967, 41968, 41970, 41972, 41973, 41977, 42317, 42647, 43033, 43040, 43042, 43045, 43681, 43683, 43686, 43688, 43690, 43693, 43695, 43698, 44252, 44491, 44493, 44495, 44497, 44672, 44902
61....43885
65....43885
71 ....39238, 42322, 43340, 44255
77....43885
107....43885
109....43885
119....40206
121....40206, 43885
125....42323
135 ....40206, 42323, 43885
145....40206, 43885
154....43885
204....44675
1275....43982

15 CFR

30....42534
50....42585
80....42585
922....39005, 43922
2016....43922

Proposed Rules:

930....40207

16 CFR

310....45134

Proposed Rules:

460....41872

17 CFR

4....42964
30....39006, 40498
232....44876
275....42247
279....42247

Proposed Rules:

1....40835

18 CFR

101....40500
141....40500
201....40500
260....40500
352....40500
357....40500

Proposed Rules:

141....40340
260....40340
284....40207
357....40340
375....40340

19 CFR

10....43624
24....43624
101....42586, 42587
102....43630
111....43624
122....42587
133....43635

Proposed Rule:

4....43574
101....42650
103....43574
113....43574
122....43574
123....43574
192....43574

20 CFR

218....39009
220....39009
225....39009
404....40119
416....40119

Proposed Rules:

404....40213
416....40213

21 CFR

101 ....39831, 41434, 44207
510....41065, 42250
520 ....41065, 42967, 42968, 43293, 43925
522 ....42250, 42589, 42968
524....42250, 42969
526....44878
556....42589
558....41066, 42589
862....40125
884....44414
1300....41222
1301....41222
1304....41222
1305....41222
1307....41222

Proposed Rules:

101....41507
131....39873
348....42324
600....44678
606....44678
610....44678
640....44678
1301....40576

22 CFR

41....40127
126....44613

Proposed Rules:

303....39490

23 CFR

Proposed Rules:

945....43888

24 CFR

200....44844

Proposed Rules:

1000....42651
3282....42327, 43987

25 CFR

11....44614

Proposed Rules:

Ch. I....39038, 42651

26 CFR

1 ....39011, 39012, 39452, 39453, 40129, 40130, 40510, 40766, 41067, 41230, 41417, 41906, 42251, 42254, 42590, 42970, 44616
20....40130, 42593
25....40130, 42593
301....40768, 41073
602 ....39012, 41067, 41230, 41906, 42254, 44616

Proposed Rules:

1 ....39498, 40218, 40224, 40579, 40581, 40583, 40848, 41087, 42476, 42652, 43047, 43055, 43058, 43059, 44499, 44689, 44904
31....42329
301 ....39498, 40849, 40850, 40857, 41089, 41090, 44905

27 CFR

4....39454
9....39833
40....43294
275....43294

Proposed Rules:

4....39500
24....39500

28 CFR

2....41527, 41696

29 CFR

102....39836
1952....43457
1956....43457
4022....41714
4044....41714

Proposed Rules:

35....41512
1625....41542
1627....41542
1926....39877, 39880

30 CFR

75....40132
250 ....41077, 41861, 43295
913....40138
917 ....41911, 42266, 42274
920....42277
934....40142
938....40147
943....40154
948....40157

Proposed Rules:

70....39881
75....39881
90....39881
250 ....40585, 41090, 44909, 44910
254 ....40585, 44909, 44910
917....41980
934....40225
935....43063
946....40227
948....44910

31 CFR

50....41250
348....41266

Proposed Rules:

103....39039

32 CFR

9....39374
10....39379
11....39381
12....39387
13....39389
14....39391
15....39394
16....39395
17....39397
199 ....43299, 44878, 44882
701....43461

33 CFR

2....42595
26 ....39353, 41913, 42595
62....42595
64....42595
95....42595
100 ....40167, 42282, 42595, 44884
101....39240, 41914
102....39240, 41914
103....39284, 41914
104....39292, 41915
105....39315, 41916

106.....39338, 41916
110.....42285, 44886
117 .....41716, 41917, 41918, 41920, 42282, 43303, 43305, 43306
120.....42595
160.....39292, 41915
161.....39353, 41913
164.....39353, 41913
165 .....39013, 39015, 39017, 39292, 39353, 39455, 40024, 40168, 40169, 40170, 40173, 40174, 40176, 40770, 40772, 41078, 41081, 41268, 41269, 41531, 41716, 41719, 41721, 41722, 41913, 41915, 41920, 41922, 42282, 42285, 42287, 42289, 42595, 43308, 43309, 43637, 43926, 44209, 44458, 44618, 44888, 44890

Proposed Rules:
100.....40615
110.....39503
117 .....42331, 43066, 44506
147.....40229
151.....44691
165 .....40231, 40859, 41091, 41764, 41982, 41984, 43700, 44256, 44696, 44706

34 CFR

263.....43639

36 CFR

Proposed Rules:
7.....43068
99.....44420
219.....41864
294.....41864, 41865

37 CFR

1.....41532
260.....39837

38 CFR

3.....42602
17.....43927
21.....42977

Proposed Rules:
17.....44507, 44913

39 CFR

111.....40774

Proposed Rules:
111.....43989

40 CFR

51.....39842, 44620
52 .....39457, 40520, 40528, 40782, 40786, 40789, 41083, 42172, 42978, 42981, 43312, 43316, 43462, 44620, 44631
62.....40531
63.....42603
70.....40528
80.....39018
81.....40789, 43316
82 .....41925, 42884, 43786, 43930
131.....40428
136.....43272
180 .....39428, 39435, 39460, 39462, 39846, 40178, 40791, 40803, 41271, 41535, 41927, 43465, 44635, 44640
261 .....43939, 44652, 44659
271.....42605, 43326
279.....44659
300.....41273

Proposed Rules:
19.....39882
27.....39882
30.....43824
31.....43824
33.....43824
35.....43824
40.....43824
51.....39888
52 .....39041, 39506, 40233, 40617, 40861, 40864, 40865, 41987, 42174, 42653, 42657, 43069, 43341, 43481, 44714, 44715
55.....44914
62.....40618
68.....45124
70.....40617, 40871
81 .....42657, 43341, 44715
82.....43991
136.....41988
180.....41989
271.....42662
300 .....44259, 44265, 44270

41 CFR

Proposed Rules:
105-55.....42170
105-56.....41093
105-550.....41274
105-570.....41290
301–50.....40618

42 CFR

411.....43940
412.....41860
489.....43940

Proposed Rules:
405.....43995
406.....43998
411.....43995
424.....44000

43 CFR

10.....39853

44 CFR

64.....39019
65 .....39021, 44460, 44461
67 .....39023, 44463, 44465, 44466

Proposed Rules:
67 .....39042, 39044, 39046, 44509, 44516

46 CFR

2.....39292, 41915
7.....42595
28.....42595
31.....39292, 41915
71.....39292, 41915
91.....39292, 41915
115.....39292, 41915
126.....39292, 41915
176.....39292, 41915
401.....43470
530.....43326

47 CFR

0.....39471
1.....42984
21.....42984, 43002
22.....42290, 42984
24.....42984
25.....43645, 43942
27.....42984
32.....38641
52.....43003, 43009
54 .....38642, 39471, 41936, 43472
64 .....40184, 41942, 43010, 44144
68.....44144
69.....43327
73 .....38643, 40185, 40186, 40187, 41284, 41724, 42608, 42609, 42984, 43329, 43645, 43646
74.....41284
80.....42984
90.....42296, 42984
95.....42984
101 .....42610, 42984, 43942

Proposed Rules:
1.....40876, 44003
2.....44011
15.....44011
22.....44003
52.....43070
54.....41996, 42333
73 .....40237, 42662, 42663, 42664, 42665, 42666, 43702, 43703, 43704, 43705, 44273
90.....42337, 44003

48 CFR

1.....43855
2.....43857
5.....43855, 43859
7.....43859
10.....43859
11.....43857
14.....43855
19.....43855, 43873
22.....43855, 43863
23.....43857, 43868
31.....43863, 43871
36.....43855
37.....43863
39.....43872
52 .....43855, 43863, 43868, 43873
53.....43855
207.....43331
217.....43332
501.....41286
538.....41286
552.....41286
Ch. 1.....43854, 43875
Ch. 10.....39854, 42717
1801.....43333
1811.....43333
1823.....43333
1851.....43333
1852.....43333

Proposed Rules:
15.....40466
30.....40104
31.....40466
52.....40104

49 CFR

40.....43946
71.....43334, 43336
171.....44992
172.....44992
173.....44992
175.....44992
176.....44992
178.....44992
180.....44992
214.....44388
512.....44209
541.....39471
571 .....43964, 43972, 44468, 44892
575.....43339
587.....44468

Proposed Rules:
192.....41768
219.....44276
390.....42339
391.....42339, 43889
393.....43891
395.....43893
396.....43893
571.....43895
583.....43899

50 CFR

17 .....39624, 40076, 43647
20.....43010
21.....43010
92.....43010
223.....41942
229.....41725
300.....39024
600.....42613
648 .....40808, 41945, 43974, 44232
660 .....40187, 41085, 42643, 43473
679 .....40811, 40812, 41085, 41086, 41946, 43030, 43479, 43480, 44473, 44665, 44666

Proposed Rules:
16.....43482
17 .....39507, 39892, 42666, 43706
18.....44020
20.....42546
223.....44722
229.....40888
600 .....40892, 42360, 42668, 42669, 42670, 43072, 44277
635.....41103, 41769
648 .....41535, 42671, 44918
660.....44518
679.....43342, 43483
697 .....39048, 42360, 43074

REMINDERS

The items in this list were editorially compiled as an aid to Federal Register users. Inclusion or exclusion from this list has no legal significance.

RULES GOING INTO EFFECT JULY 31, 2003

HEALTH AND HUMAN SERVICES DEPARTMENT

Food and Drug Administration

Animal drugs, feeds, and related products:
- Sponsor name and address changes—
  - Schering-Plough Animal Health Corp.; published 7-31-03

HOMELAND SECURITY DEPARTMENT

Coast Guard

Ports and waterways safety:
- Lake Erie, Cleveland, OH; safety zone; published 7-15-03
- Lake Washington, Seattle, WA; safety zone; published 7-31-03

SECURITIES AND EXCHANGE COMMISSION

Electronic Data Gathering, Analysis, and Retrieval System (EDGAR):
- Filer Manual; update adoption and incorporation by reference; published 7-31-03

TRANSPORTATION DEPARTMENT

Federal Aviation Administration

Airworthiness directives:
- Hartzell Propeller Inc.; published 6-26-03
- McDonnell Douglas; published 7-16-03

COMMENTS DUE NEXT WEEK

AGRICULTURE DEPARTMENT

Animal and Plant Health Inspection Service

Exportation and importation of animals and animal products:
- Cattle from Mexico; importation into U.S. prohibited due to tuberculosis; comments due by 8-4-03; published 6-3-03 [FR 03-13838]

AGRICULTURE DEPARTMENT

Forest Service

State and private forestry assistance:
- Forest Land Enhancement Program; comments due by 8-8-03; published 6-9-03 [FR 03-14259]

AGRICULTURE DEPARTMENT

Grain Inspection, Packers and Stockyards Administration

Wheat; U.S. standards; comments due by 8-4-03; published 6-4-03 [FR 03-13772]

AGRICULTURE DEPARTMENT

Natural Resources Conservation Service

Support activities:
- Technical service provider assistance; comments due by 8-8-03; published 7-9-03 [FR 03-17260]

COMMERCE DEPARTMENT

National Oceanic and Atmospheric Administration

Endangered Species Act; interagency cooperation:
- National Fire Plan; implementation; comments due by 8-4-03; published 6-5-03 [FR 03-14108]

Fishery conservation and management:
- Atlantic highly migratory species—
  - Atlantic bluefin tuna; comments due by 8-8-03; published 7-10-03 [FR 03-17521]
  - Atlantic swordfish; comments due by 8-4-03; published 6-20-03 [FR 03-15690]
  - Swordfish and bluefin tuna; comments due by 8-4-03; published 7-15-03 [FR 03-17867]
- Magnuson-Stevens Act provisions—
  - Domestic fisheries; exempted fishing permit applications; comments due by 8-4-03; published 7-18-03 [FR 03-18339]
  - Domestic fisheries; exempted fishing permit applications; comments due by 8-4-03; published 7-18-03 [FR 03-18341]
  - Domestic fisheries; exempted fishing permit applications; comments due by 8-4-03; published 7-18-03 [FR 03-18342]
  - Domestic fisheries; exempted fishing permit applications; comments due by 8-5-03; published 7-21-03 [FR 03-18488]
- West Coast States and Western Pacific fisheries—
  - Pacific whiting; comments due by 8-4-03; published 7-18-03 [FR 03-18164]

DEFENSE DEPARTMENT

Acquisition regulations:
- Follow-on production contracts for products developed pursuant to prototype projects; comments due by 8-4-03; published 6-3-03 [FR 03-13536]

Federal Acquisition Regulation (FAR):
- Deferred compensation and postretirement benefits other than pensions; comments due by 8-4-03; published 6-3-03 [FR 03-13859]
- Unsolicited proposals; comments due by 8-4-03; published 6-3-03 [FR 03-13860]

ENERGY DEPARTMENT

Federal Energy Regulatory Commission

Electric utilities (Federal Power Act), natural gas companies (Natural Gas Act), and oil pipeline companies (Interstate Commerce Act):
- Quarterly financial reporting requirements and annual reports revisions; comments due by 8-6-03; published 7-7-03 [FR 03-16811]

Natural Gas Policy Act:
- Blanket sales certificates; comments due by 8-6-03; published 7-7-03 [FR 03-16820]

Practice and procedure:
- Cash management programs; documentation requirements; comments due by 8-7-03; published 7-8-03 [FR 03-16819]

ENVIRONMENTAL PROTECTION AGENCY

Air pollution control:
- State operating permits programs—
  - Texas; comments due by 8-8-03; published 7-9-03 [FR 03-17338]

Air programs:
- Stratospheric ozone protection—
  - Ozone-depleting substance; substitutes list; comments due by 8-4-03; published 6-3-03 [FR 03-13254]

Air programs; approval and promulgation; State plans for designated facilities and pollutants:
- Iowa; comments due by 8-7-03; published 7-8-03 [FR 03-17101]

Air quality implementation plans:
- Preparation, adoption, and submittal—
  - Regional haze rule; Western States and Indian tribes; mobile source provisions; comments due by 8-4-03; published 7-3-03 [FR 03-16922]
  - Regional haze rule; Western States and Indian tribes; mobile source provisions; comments due by 8-4-03; published 7-3-03 [FR 03-16923]

Air quality implementation plans; approval and promulgation; various States:
- California; comments due by 8-6-03; published 7-7-03 [FR 03-16926]
- Georgia; comments due by 8-8-03; published 7-9-03 [FR 03-17204]
- Maryland; comments due by 8-8-03; published 7-9-03 [FR 03-17340]
- Nebraska; comments due by 8-7-03; published 7-8-03 [FR 03-17098]
- Texas; comments due by 8-8-03; published 7-9-03 [FR 03-17339]

Civil monetary penalties; inflation adjustment; comments due by 8-4-03; published 7-3-03 [FR 03-16925]

Human testing; standards and criteria; comments due by 8-5-03; published 5-7-03 [FR 03-11002]

Pesticides; tolerances in food, animal feeds, and raw agricultural commodities:
- Thymol and eucalyptus oil; comments due by 8-5-03; published 6-6-03 [FR 03-14198]

Solid wastes:
- Hazardous waste; identification and listing—
  - Exclusions; comments due by 8-4-03; published 6-18-03 [FR 03-15361]

FEDERAL COMMUNICATIONS COMMISSION

Frequency allocations and radio treaty matters:
- 76-81 GHz frequency and frequency bands above

95 GHz reallocation; domestic and international consistency realignment; comments due by 8-4-03; published 6-3-03 [FR 03-13780]
Practice and procedure:
Wireless telecommunications services—
Communications facilities and historic properties; nationwide programmatic agreement; comments due by 8-8-03; published 7-9-03 [FR 03-17415]
Radio frequency devices:
Broadband power line systems; comments due by 8-6-03; published 5-23-03 [FR 03-12914]

GENERAL SERVICES ADMINISTRATION
Federal Acquisition Regulation (FAR):
Deferred compensation and postretirement benefits other than pensions; comments due by 8-4-03; published 6-3-03 [FR 03-13859]
Unsolicited proposals; comments due by 8-4-03; published 6-3-03 [FR 03-13860]

GOVERNMENT ETHICS OFFICE
Organization and procedures:
Statutory gift acceptance authority; comments due by 8-4-03; published 5-5-03 [FR 03-11043]

HEALTH AND HUMAN SERVICES DEPARTMENT
Food and Drug Administration
Human drugs:
Opthalmic products (OTC); final monograph; technical amendment; comments due by 8-4-03; published 6-3-03 [FR 03-13827]

HOMELAND SECURITY DEPARTMENT
Coast Guard
Ports and waterways safety:
Beverly Harbor, MA; safety zone; comments due by 8-8-03; published 7-9-03 [FR 03-17367]

INTERIOR DEPARTMENT
Fish and Wildlife Service
Endangered and threatened species:
Critical habitat designations—
Braun's rock-cress; comments due by 8-4-03; published 6-3-03 [FR 03-13509]
Endangered Species Act; interagency cooperation:
National Fire Plan; implementation; comments due by 8-4-03; published 6-5-03 [FR 03-14108]
Importation, exportation, and transportation of wildlife:
Injurious wildlife—
Black carp; comments due by 8-4-03; published 6-4-03 [FR 03-13996]

INTERIOR DEPARTMENT
Surface Mining Reclamation and Enforcement Office
Permanent program and abandoned mine land reclamation plan submissions:
North Dakota; comments due by 8-6-03; published 7-7-03 [FR 03-17084]
Virginia; comments due by 8-6-03; published 7-7-03 [FR 03-17083]

JUSTICE DEPARTMENT
Prisons Bureau
Inmate control, custody, care, etc.:
Release transportation regulations; clarification; comments due by 8-8-03; published 6-9-03 [FR 03-14380]

NATIONAL AERONAUTICS AND SPACE ADMINISTRATION
Federal Acquisition Regulation (FAR):
Deferred compensation and postretirement benefits other than pensions; comments due by 8-4-03; published 6-3-03 [FR 03-13859]
Unsolicited proposals; comments due by 8-4-03; published 6-3-03 [FR 03-13860]

NUCLEAR REGULATORY COMMISSION
Radioactive material; packaging and transportation:
Safe transportation regulations; public meeting; comments due by 8-8-03; published 6-26-03 [FR 03-16175]

RAILROAD RETIREMENT BOARD
Railroad Retirement Act:
Disability earnings determinations; comments due by 8-8-03; published 6-9-03 [FR 03-14273]

SMALL BUSINESS ADMINISTRATION
Business loans:
Certified Development Company Loan Program changes; comments due by 8-7-03; published 7-8-03 [FR 03-16862]
Small business size standards:
Nonmanufacturer rule; waivers—
Ammunition (except small arms); comments due by 8-8-03; published 7-25-03 [FR 03-18986]

TRANSPORTATION DEPARTMENT
Federal Aviation Administration
Aircraft products, parts, and materials; false and misleading statements; comments due by 8-4-03; published 5-5-03 [FR 03-10946]
Airworthiness directives:
Boeing; comments due by 8-4-03; published 6-18-03 [FR 03-15324]
Bombardier; comments due by 8-8-03; published 7-9-03 [FR 03-17319]
Cessna; comments due by 8-8-03; published 5-15-03 [FR 03-12113]
Dornier; comments due by 8-8-03; published 7-9-03 [FR 03-17314]
Eurocopter Deutschland GmbH; comments due by 8-4-03; published 6-5-03 [FR 03-14136]
Eurocopter France; comments due by 8-4-03; published 6-3-03 [FR 03-13654]
International Aero Engines; comments due by 8-4-03; published 6-5-03 [FR 03-14133]
Learjet; comments due by 8-4-03; published 6-18-03 [FR 03-15339]
McDonnell Douglas; comments due by 8-4-03; published 6-18-03 [FR 03-15333]
Mitsubishi Heavy Industries, Ltd.; comments due by 8-5-03; published 6-4-03 [FR 03-13980]
New Piper Aircraft, Inc.; correction; comments due by 8-8-03; published 7-21-03 [FR C3-13650]
Pilatus Aircraft Ltd; comments due by 8-4-03; published 7-3-03 [FR 03-16844]
Piper Aircraft, Inc.; comments due by 8-8-03; published 6-4-03 [FR 03-13650]
Pratt & Whitney Canada; comments due by 8-5-03; published 6-6-03 [FR 03-14276]
Raytheon; comments due by 8-4-03; published 6-4-03 [FR 03-13979]
Rolls-Royce plc; comments due by 8-4-03; published 6-4-03 [FR 03-13973]
Airworthiness standards:
Special conditions—
CenTex Aerospace, Inc.; Raytheon/Beech Model 58 airplane; comments due by 8-8-03; published 7-9-03 [FR 03-17249]
Class E airspace; comments due by 8-4-03; published 6-4-03 [FR 03-14070]

TRANSPORTATION DEPARTMENT
National Highway Traffic Safety Administration
Motor vehicle safety standards:
Child restraint systems—-
Improved test dummies, updated test procedures, and extended child restraints standards for children up to 65 pounds; comments due by 8-8-03; published 6-24-03 [FR 03-14425]
Vehicle compatibility and roll over mitigation; safety reports availability; comments due by 8-4-03; published 6-18-03 [FR 03-15239]

TREASURY DEPARTMENT
Foreign Assets Control Office
Global terrorism; sanctions regulations; comments due by 8-5-03; published 6-6-03 [FR 03-14251]

TREASURY DEPARTMENT
Fiscal Service
Financial Management Service:
Automated Clearing House; Federal agency participation; comments due by 8-4-03; published 6-5-03 [FR 03-13833]

TREASURY DEPARTMENT
Internal Revenue Service
Income taxes:
Property transferees; liabilities assumed in certain transactions; comments due by 8-4-03; published 5-6-03 [FR 03-11212]
Securities and commodities; statutory valuation requirements; safe harbor; comments due by 8-4-03;

published 5-5-03 [FR 03-11047]

Separate return limitation years; loss carryovers waiver; cross-reference; comments due by 8-5-03; published 5-7-03 [FR 03-11210]

VETERANS AFFAIRS DEPARTMENT

Board of Veterans Appeals:

Appeals regulations and rules of practice—

Representative services withdrawal; notice procedures; comments due by 8-4-03; published 6-3-03 [FR 03-13797]

LIST OF PUBLIC LAWS

This is a continuing list of public bills from the current session of Congress which have become Federal laws. It may be used in conjunction with ''P L U S'' (Public Laws Update Service) on 202–741–6043. This list is also available online at *http://www.nara.gov/fedreg/plawcurr.html*.

The text of laws is not published in the **Federal Register** but may be ordered in ''slip law'' (individual pamphlet) form from the Superintendent of Documents, U.S. Government Printing Office, Washington, DC 20402 (phone, 202–512–1808). The text will also be made available on the Internet from GPO Access at *http://www.access.gpo.gov/nara/nara005.html*. Some laws may not yet be available.

H.R. 255/P.L. 108–62

To authorize the Secretary of the Interior to grant an easement to facilitate access to the Lewis and Clark Interpretive Center in Nebraska City, Nebraska. (July 29, 2003; 117 Stat. 871)

H.R. 733/P.L. 108–63

To authorize the Secretary of the Interior to acquire the McLoughlin House in Oregon City, Oregon, for inclusion in Fort Vancouver National Historic Site, and for other purposes. (July 29, 2003; 117 Stat. 872)

H.R. 1577/P.L. 108–64

To designate the visitor center in Organ Pipe Cactus National Monument in Arizona as the ''Kris Eggle Visitor Center'', and for other purposes. (July 29, 2003; 117 Stat. 874)

S. 1399/P.L. 108–65

To redesignate the facility of the United States Postal Service located at 101 South Vine Street in Glenwood, Iowa, as the ''William J. Scherle Post Office Building''. (July 29, 2003; 117 Stat. 875)

Last List July 30, 2003

Public Laws Electronic Notification Service (PENS)

PENS is a free electronic mail notification service of newly enacted public laws. To subscribe, go to *http://listserv.gsa.gov/archives/publaws-l.html*

Note: This service is strictly for E-mail notification of new laws. The text of laws is not available through this service. **PENS** cannot respond to specific inquiries sent to this address.