ENVIRONMENTAL PROTECTION AGENCY

40 CFR Part 60

[OAR–2002–0071; FRL–7566–8]

RIN 2060–AG21

Update of Continuous Instrumental Test Methods

AGENCY: Environmental Protection Agency (EPA).

ACTION: Proposed rule.

SUMMARY: We, the Environmental Protection Agency, are proposing to amend five instrumental test methods that are used to measure air pollutant emissions from stationary sources. The intended effect of this rule is to harmonize, simplify, and update the test methods. The methods were originally developed for specific industry applications but have since been adapted to general testing applications. These proposed revisions would remove inconsistencies in equipment and performance specifications so each method would be similar in these respects and have expanded applicability. We are also proposing to add helpful calculation procedures, quality assurance recommendations, and provisions for sampling at low concentrations. A large number of industries are already subject to the provisions requiring the use of these methods. Some of the affected industries and their Standard Industrial Classification codes are listed under **SUPPLEMENTARY INFORMATION.**

DATES: *Comments:* Submit comments on or before December 9, 2003.

Public Hearing: If anyone contacts us requesting to speak at a public hearing by October 27, 2003, we will hold a public hearing on November 10, 2003.

ADDRESSES: *Comments.* Comments may be submitted electronically, by mail, by facsimile, or through hand delivery/courier. Follow the detailed instructions as provided in Unit I.C. of the **SUPPLEMENTARY INFORMATION.** By U.S. Postal Service, send comments (in duplicate, if possible) to: Air and Radiation Docket and Information Center (6102), Attention Docket Number OAR–2002–0071, U.S. Environmental Protection Agency, 1200 Pennsylvania Avenue, NW., Washington, DC 20460. In person or by courier, deliver comments (in duplicate if possible) to: EPA Docket Center, Attention Docket ID No. OAR–2002–0071, EPA West, Room 108, 1301 Constitution Ave., NW., Washington, DC 20460. We request that a separate copy also be sent to the contact person listed below (*see* **FOR FURTHER INFORMATION CONTACT**).

Public Hearing. If a public hearing is held, it will be held at 10 a.m. in the EPA Auditorium, Research Triangle Park, North Carolina, or at an alternate site nearby.

Docket. Docket No. OAR–2002–0071, contains information relevant to this rule. You can read and copy it between 8:30 a.m. and 5:30 p.m., Monday through Friday, (except for Federal holidays), at the U.S. Environmental Protection Agency, EPA Docket Center, EPA West, Room 108, 1301 Constitution Ave., Washington, DC 20004; telephone (202) 566–1742. The docket office may charge a reasonable fee for copying.

FOR FURTHER INFORMATION CONTACT: Foston Curtis or Terry Harrison, Emission Measurement Center, Mail Code D205–02, Emissions, Monitoring, and Analysis Division, U.S. Environmental Protection Agency, Research Triangle Park, North Carolina 27711; telephone (919) 541–1063 or 5233; facsimile number (919) 541–0516; electronic mail address *curtis.foston@epa.gov* or *harrison.terry@epa.gov.*

SUPPLEMENTARY INFORMATION:

I. General Information

A. Affected Entities

Entities potentially affected by this action include those listed in Table 1.

TABLE 1.—ENTITIES POTENTIALLY AFFECTED BY THIS ACTION

Examples of regulated entities	SIC codes	NAICS codes
Fossil Fuel-Fired Steam Generators	3569	332410
Industrial, Commercial, Institutional Steam Generating Units	3569	332410
Municipal Waste Combustors	3567	562213
Hospital, Medical, Infectious Waste Incinerators	3567	562211
Petroleum Refineries	2911	324110
Stationary Gas Turbines	3511	333611

This table is not intended to be exhaustive, but rather provides a guide for readers regarding entities likely to be affected by this action. If you have any questions regarding the applicability of this action to a particular entity, consult the person listed in the preceding **FOR FURTHER INFORMATION CONTACT** section.

B. How Can I Get Copies of This Document and Other Related Information?

1. *Docket.* EPA has established an official public docket for this action under Docket ID No. OAR–2002–0071. The official public docket consists of the documents specifically referenced in this action, any public comments received, and other information related to this action. Although a part of the official docket, the public docket does not include Confidential Business Information (CBI) or other information whose disclosure is restricted by statute. The official public docket is the collection of materials that is available for public viewing at the EPA Docket Center, (EPA/DC) EPA West, Room 108, 1301 Constitution Ave., NW., Washington, DC 20460; telephone (202) 566–1742. The EPA Docket Center Public Reading Room is open from 8:30 a.m. to 4:30 p.m., Monday through Friday, excluding legal holidays. The telephone number for the Reading Room is (202) 566–1742.

2. *Electronic Access.* You may access this **Federal Register** document electronically through the EPA Internet under the **Federal Register** listings at *http://www.epa.gov/fedrgstr/.*

An electronic version of the public docket is available through EPA's electronic public docket and comment system, EPA Dockets. You may use EPA Dockets at *http://www.epa.gov/edocket/* to submit or view public comments, access the index listing of the contents of the official public docket, and to access those documents in the public docket that are available electronically. Once in the system, select ''search,'' then key in the appropriate docket identification number.

Certain types of information will not be placed in the EPA Dockets. Information claimed as CBI and other information whose disclosure is restricted by statute, which is not included in the official public docket, will not be available for public viewing in EPA's electronic public docket. EPA's

policy is that copyrighted material will not be placed in EPA's electronic public docket but will be available only in printed, paper form in the official public docket. To the extent feasible, publicly available docket materials will be made available in EPA's electronic public docket. When a document is selected from the index list in EPA Dockets, the system will identify whether the document is available for viewing in EPA's electronic public docket. Although not all docket materials may be available electronically, you may still access any of the publicly available docket materials through the docket facility identified in Unit I.B.

For public commenters, it is important to note that EPA's policy is that public comments, whether submitted electronically or on paper, will be made available for public viewing in EPA's electronic public docket as EPA receives them and without change, unless the comment contains copyrighted material, CBI, or other information whose disclosure is restricted by statute. When EPA identifies a comment containing copyrighted material, EPA will provide a reference to that material in the version of the comment that is placed in EPA's electronic public docket. The entire printed comment, including the copyrighted material, will be available in the public docket.

Public comments submitted on computer disks that are mailed or delivered to the docket will be transferred to EPA's electronic public docket. Public comments that are mailed or delivered to the Docket will be scanned and placed in EPA's electronic public docket. Where practical, physical objects will be photographed, and the photograph will be placed in EPA's electronic public docket along with a brief description written by the docket staff.

For additional information about EPA's electronic public docket, visit EPA Dockets online or *see* 67 FR 38102, May 31, 2002.

C. How and To Whom Do I Submit Comments?

You may submit comments electronically, by mail, by facsimile, or through hand delivery/courier. To ensure proper receipt by EPA, identify the appropriate docket identification number in the subject line on the first page of your comment. Please ensure that your comments are submitted within the specified comment period. Comments received after the close of the comment period will be marked ''late.'' EPA is not required to consider these late comments. However, late comments may be considered if time permits.

1. *Electronically.* If you submit an electronic comment as prescribed below, EPA recommends that you include your name, mailing address, and an e-mail address or other contact information in the body of your comment. Also include this contact information on the outside of any disk or CD–ROM you submit, and in any cover letter accompanying the disk or CD–ROM. This ensures that you can be identified as the submitter of the comment and allows EPA to contact you in case EPA cannot read your comment due to technical difficulties or needs further information on the substance of your comment. EPA's policy is that EPA will not edit your comment, and any identifying or contact information provided in the body of a comment will be included as part of the comment that is placed in the official public docket, and made available in EPA's electronic public docket. If EPA cannot read your comment due to technical difficulties and cannot contact you for clarification, EPA may not be able to consider your comment.

i. *EPA Dockets.* Your use of EPA's electronic public docket to submit comments to EPA electronically is EPA's preferred method for receiving comments. Go directly to EPA Dockets at *http://www.epa.gov/edocket,* and follow the online instructions for submitting comments. To access EPA's electronic public docket from the EPA Internet Home Page, select ''Information Sources,'' ''Dockets,'' and ''EPA Dockets.'' Once in the system, select ''search,'' and then key in Docket ID No. OAR–2002–0071. The system is an ''anonymous access'' system, which means EPA will not know your identity, e-mail address, or other contact information unless you provide it in the body of your comment.

ii. *E-mail.* Comments may be sent by electronic mail (e-mail) to *a-and-r-docket@epamail.gov,* Attention Docket ID No. OAR–2002–0071. In contrast to EPA's electronic public docket, EPA's e-mail system is not an ''anonymous access'' system. If you send an e-mail comment directly to the Docket without going through EPA's electronic public docket, EPA's e-mail system automatically captures your e-mail address. E-mail addresses that are automatically captured by EPA's e-mail system are included as part of the comment that is placed in the official public docket and made available in EPA's electronic public docket.

iii. *Disk or CD–ROM.* You may submit comments on a disk or CD–ROM that you mail to the mailing address identified in Unit I.C.2. These electronic submissions will be accepted in WordPerfect or ASCII file format. Avoid the use of special characters and any form of encryption.

2. *By Mail.* Send duplicate copies of your comments to: ''Update of Continuous Instrumental Test Methods,'' Environmental Protection Agency, Mail Code 6102T, 1200 Pennsylvania Ave., NW., Washington, DC, 20460, Attention Docket ID No. OAR–2002–0071.

3. *By Hand Delivery or Courier.* Deliver your comments to: EPA Docket Center, EPA West, Room 108, 1301 Constitution Ave., NW., Washington, DC 20460, Attention Docket ID No. OAR–2002–0071. Such deliveries are only accepted during the Docket's normal hours of operation as identified in Unit I.B.1.

4. *By Facsimile.* Fax your comments to: 202–566–1741, Attention Docket ID No. OAR–2002–0071.

D. How Should I Submit CBI to the Agency?

Do not submit information that you consider to be CBI electronically through EPA's electronic public docket or by e-mail. Only send or deliver information identified as CBI to the docket address to the attention of Docket ID No. OAR–2002–0071. You may claim information that you submit to EPA as CBI by marking any part or all of that information as CBI (if you submit CBI on disk or CD–ROM, mark the outside of the disk or CD–ROM as CBI and then identify electronically within the disk or CD–ROM the specific information that is CBI). Information so marked will not be disclosed except in accordance with procedures set forth in 40 CFR part 2.

In addition to one complete version of the comment that includes any information claimed as CBI, a copy of the comment that does not contain the information claimed as CBI must be submitted for inclusion in the public docket and EPA's electronic public docket. If you submit the copy that does not contain CBI on disk or CD–ROM, mark the outside of the disk or CD–ROM clearly that it does not contain CBI. Information not marked as CBI will be included in the public docket and EPA's electronic public docket without prior notice. If you have any questions about CBI or the procedures for claiming CBI, please consult the person identified in the **FOR FURTHER INFORMATION CONTACT** section.

E. What Should I Consider as I Prepare My Comments for EPA?

You may find the following suggestions helpful for preparing your comments:

1. Explain your views as clearly as possible.
2. Describe any assumptions that you used.
3. Provide any technical information and/or data you used that support your views.
4. If you estimate potential burden or costs, explain how you arrived at your estimate.
5. Provide specific examples to illustrate your concerns.
6. Offer alternatives.
7. Make sure to submit your comments by the comment period deadline identified.
8. To ensure proper receipt by EPA, identify the appropriate docket identification number in the subject line on the first page of your response. It would also be helpful if you provided the name, date, and **Federal Register** citation related to your comments.

Background

Methods 3A, 6C, 7E, 10, and 20 are instrumental test methods for determining diluent (oxygen and carbon dioxide), sulfur dioxide, nitrogen oxides, and carbon monoxide emissions from stationary sources. The methods were developed for boilers, electric utility plants, refinery catalytic cracking catalyst regenerators, and gas turbines covered under the New Source Performance Standards (NSPS) in 40 CFR part 60. They were later adopted into the Acid Rain regulations and State and regional programs. The test methods were not developed at the same time and do not contain consistent equipment and performance requirements. Currently, some methods require more up-to-date equipment than others and some have more stringent performance requirements than others. These dissimilarities have hampered the current trend of using the methods together in the field. We are proposing to make collective changes that would render the methods easier to use by harmonizing their requirements. This would also update obsolete requirements and add flexibility by allowing alternatives to various equipment and performance specifications. The revisions we are proposing to the data reduction procedures would increase the certainty of the generated data.

On August 27, 1997 (62 FR 45369), many of the updates of this action were proposed with a larger action that amended the stationary source testing and monitoring rules in 40 CFR parts 60, 61, and 63. In that proposal, minor revisions and updates were made and all test methods and performance specifications were revised into the new Environmental Monitoring Management Council (EMMC) format. Several commenters asserted that the preamble gave inadequate notice of the changes we were making to the instrumental methods. They argued that the proposal provided an inadequate basis and purpose statement and that it misled readers into thinking that no substantive changes were being made to the methods. Due to the large number of changes we were making in the regulations at that time, and in light of the section 307(d) requirements, the commenters requested that we address the instrumental method revisions through a separate proposal and not promulgate them with the rest of that package.

We agreed with these commenters concerns and stated our intention in the final rule [65 FR 61744] to repropose the revisions to the instrumental methods as a separate rule. In today's notice, we are proposing to revise equipment and procedures in the instrumental methods where appropriate to make their requirements consistent. We are also rewriting the methods in EMMC format. We have considered the comments we received pertinent to these methods in the August 27 proposal and are summarizing the major ones in this preamble. We will formally address all significant relevant comments from the first proposal in the final notice of these amendments.

Outline. The information presented in this preamble is organized as follows:

I. Why Are These Amendments Being Made to the Instrumental Methods?
II. What Changes Are Being Proposed to the Methods?
III. What Major Comments From the Previous Proposal are Pertinent to This Reproposal?
IV. What Statutory and Executive Orders Apply to This Rule?

I. Why Are These Amendments Being Proposed?

Amendments to Methods 3A, 6C, 7E, 10, and 20 are needed to update their performance requirements to state-of-the-art levels, remove obsolete specifications, harmonize similar requirements, and simplify to enhance their utility and reduce the costs of testing.

II. What Changes Are Being Proposed to the Methods?

We are proposing that Methods 3A, 6C, 7E, 10, and 20 in appendix A of 40 CFR 60 be revised to: (1) Make their equipment specifications and procedures as similar as possible to make them easier to use together in the field, (2) remove obsolete procedures and equipment listings, (3) add alternative performance tests, and (4) change their outline to conform with the standard EMMC format. We are proposing to base the analyzer calibration error on a percentage of the manufacturer certified gas value and the sampling system bias on a percentage of the applicable emission standard (except in Method 3A) instead of the span. For Method 3A, we are basing the tests on a percentage of the analyzer range. For the current bias test, the span may be chosen over a range of values instead of being a prescribed value. Under this allowance, the higher the span chosen for a test, the easier the performance criterion is met. We are proposing to base the bias test on a fixed value (the emission standard) to eliminate nonuniformity in stringency based on the tester's choice of a span. The calibration drift test that is currently required before and after each run would be dropped. We feel the bias test is a good enough indicator of analytical drift. We are also proposing to redefine the span as the highest concentration of the calibration curve (equivalent to the high-level calibration gas value).

The requirements of Method 10 would be modernized by upgrading many of its requirements to the current level of Methods 3A, 6C, and 7E. The analyzer calibration error test, sampling system bias test, and the calibration gases now required in Methods 3A, 6C, and 7E are being proposed for Method 10.

Methods 3A, 6C, and 10 are being proposed as abbreviated methods that reference Method 7E for much of the detail. Method 7E is being proposed as the full-length descriptive method. To remove the testing duplication between Method 20 and other methods, Method 20 would reference Methods 3A and 6C for diluent and sulfur dioxide measurements. The equations in Method 20 for concentration correction, fuel factor, and emission rate would be moved to Method 7E. Method 20 would exist as a placeholder in order to maintain references to it in State regulation and permit citations.

We are proposing the following specific changes to Methods 3A, 6C, 7E, 10 and 20:

1. Method 10 would incorporate the calibration error test and between-run sampling system bias tests.

2. The performance criteria for bias test would be based on the concentration of the emission standard rather than the span. The requirement to correct the sample concentration for sampling system bias is replaced by a calculation of the run uncertainty.

3. Initial interference tests may be analyzer type-certified by manufacturers. Thereafter, an interference test of major potential interferences would be required at least annually. An alternative interference test would be allowed for Method 6C.

4. Three calibration gases would be required for each test method (Method 10 now requires four gases). The calibration gases would have to be of EPA traceability protocol quality and be in the same concentration ranges as now prescribed in Method 6C.

5. The Method 20 calculations would be moved to Method 7E. Methods 3A and 6C would be referenced for diluent and sulfur dioxide measurements.

6. Method 7E would require an NO_2 to NO converter efficiency test before each test for systems that convert NO_2 to NO before analysis.

7. Chemiluminescence analyzers would not be the only allowed technology for Method 7E.

8. In Method 10, alternatives to the ascarite and silica gel interference traps would be allowed.

9. A table summarizing quality control measures, performance requirements, and acceptable alternatives would be added.

10. Specific requirements for sampling point selection would be added.

11. Provisions for manufacturer certification of interference and stability would be added.

12. The methods would be reformatted in the EMMC format.

III. What Major Comments From the Previous Proposal Are Pertinent to This Reproposal?

The public comments received from the previous proposal have been evaluated and will be addressed comprehensively in the Comments and Responses Document that supplements the final rule following from this proposal. A number of revisions have been made to the proposed methods based on these comments. In this preamble, we discuss the comments that have resulted in significant revisions. Other minor revisions have been made based on specific comments, but these will be addressed later in the Summary of Comments and Responses Document.

Several commenters expressed concern that the proposed calculation of the bias test relative to the applicable emission standard added confusion for tests conducted at facilities not subject to an emission standard. The commenters argued that this new approach would upset market-based program tests and tests where the emission standard is in units other than concentration.

We consider these concerns valid and are now proposing to allow market-based programs to continue to base the acceptance tests on the span. For cases where the emission standard is in units other than concentration, we are proposing a conversion table to help determine a concentration equivalent to the emission standard.

Commenters were both for and against eliminating the calibration drift test. Since the sampling system bias check includes a measurement of analytical drift, we believe the calibration drift test is not necessary. Additionally, the proposed requirements for manufacturer's certification of stability for low-concentration analyzers and the yearly recheck of the analyzer for interferences promotes the use of better and more stable analytical technology.

One commenter noted that there is no carbon dioxide or oxygen emission standard for any source. For this reason, the commenter felt that sampling system bias limits should not be tied to emission limits. We agree with the commenter and are proposing to base the bias test limits in Method 3A on a percentage of the analyzer range instead of a percentage of the emission standard.

One commenter suggested that EPA specify a minimum number of sampling points when there is no applicable regulation. We are adding the Method 1 sampling point specifications in this proposal and allowing the option to conduct a stratification test if fewer sampling points are believed adequate.

Several commenters preferred we replace the requirement to use the high-level gas in the bias test with the option to use either the mid- or high-level gas, depending upon which gas is closer to the stack gas concentration. This proposal has incorporated this recommendation.

One commenter suggested that developing interference data was the responsibility of the instrument supplier, not the tester. The commenter thought the current interference test was excessive, could lead to sloppy work or even falsification of interference data, and limits the range of sources where the method could be used. We have added an allowance for manufacturer certification of instruments, and we are requiring this certification where instruments will be used routinely to measure low (<15 ppm) concentrations. However, we feel that an ongoing program to ensure the instrument is properly maintained and is appropriate for the test facility is still needed. In this proposal we are adding an abbreviated check for major potential interferences, performed after the initial test and at least on a yearly basis, to show that the analyzer remains interference-free. We feel that maintaining the instrument in this way will increase data quality and promote instrument reliability.

Other commenters asked that the interference test be clarified. It was not clear whether the test must be performed with the first sampling event in a State or region, or the first sampling event of the calendar year. Was the test to be repeated if an analyzer undergoes significant maintenance? Would gas, oil, or coal boilers be considered different source types and require separate interference tests? One commenter recommended we consider modifying the requirement by stating that once an interference check is performed on a certain make or model of analyzer, additional checks on that company's same model need not be performed.

This proposal clearly states that the interference test is required for each different source category you test. This is irrespective of the regulatory jurisdiction or calendar year. The test must be repeated at each source category when a major instrument component (*e.g.,* detector) is replaced. Gas-, oil-, and coal-fired boilers would be considered the same source category if the test gas interference check is performed. This procedure challenges the analyzer with a number of potential interference gases. If the Method 6C/Method 6 comparison interference check is used for sulfur dioxide, we feel the potential interference differences among the three boiler types warrants three separate interference tests. However, we are proposing to allow the test gas interference check as an alternative to the Method 6C/Method 6 comparison interference test in Method 6C. We are proposing to allow the instrument manufacturers to type-certify analyzers to fulfill the initial interference test requirement.

Many commenters objected to the proposed bias correction equation and argued it was too complicated. We are proposing to drop the bias correction requirement in favor of calculating the level of uncertainty for a run.

IV. Statutory and Executive Order Reviews

A. Executive Order 12866—Regulatory Planning and Reviews

Under Executive Order 12866 (58 FR 51735 October 4, 1993), we must determine whether this regulatory action is ''significant'' and therefore subject to Office of Management and Budget (OMB) review and the requirements of this Executive Order. The Order defines ''significant regulatory action'' as one that is likely to result in a rule that may: (1) Have an annual effect on the economy of $100 million or more or adversely affects in a material way the economy, a sector of the economy, productivity, competition, jobs, the environment, public health or safety, or State, local, or tribal governments or communities; (2) create a serious inconsistency or otherwise interferes with an action taken or planned by another agency; (3) materially alter the budgetary impact of entitlements, grants, user fees, or loan programs, or the rights and obligations of recipients thereof; or (4) raise novel legal or policy issues arising out of legal mandates, the President's priorities, or the principles set forth in the Executive Order.

We have determined that this rule is not a ''significant regulatory action'' under the terms of Executive Order 12866 and is therefore not subject to OMB review. We have determined that this regulation would result in none of the economic effects set forth in section 1 of the Order because it does not impose emission measurement requirements beyond those specified in the current regulations, nor does it change any emission standard.

B. Paperwork Reduction Act

This rule does not impose any information collection burden that requires OMB review and approval under the provisions of the Paperwork Reduction Act of 1995 (44 U.S.C. 3501 *et seq.*).

C. Regulatory Flexibility Act

The RFA generally requires an agency to prepare a regulatory flexibility analysis of any rule subject to notice and comment rulemaking requirements under the Administrative Procedure Act or any other statute unless the agency certifies that the rule will not have a significant economic impact on a substantial number of small entities. Small entities include small businesses, small organizations, and small governmental jurisdictions.

For purposes of assessing the impacts of today's rule on small entities, small entity is defined as: (1) A small business as defined by the Small Business Administration's regulations at 13 CFR 121.201; (2) a small governmental jurisdiction that is a government of a city, county, town, school district or special district with a population of less than 50,000; and (3) a small organization that is any not-for-profit enterprise which is independently owned and operated and is not dominant in its field. Entities potentially affected by this action include those listed in Table 1 of section I.A.

After considering the economic impacts of today's proposed rule on small entities, I certify that this action will not have a significant economic impact on a substantial number of small entities. We are proposing to amend five instrumental test methods that are used to measure air pollutant emissions from stationary sources. The intended effect of this rule is to harmonize, simplify, and update the test methods. The methods were originally developed for specific industry applications but have since been adapted to general testing applications. These proposed revisions would remove inconsistencies in equipment and performance specifications so each method would be similar in these respects and have expanded applicability. We are also proposing to add helpful calculation procedures, quality assurance recommendations, and provisions for sampling at low concentrations. A large number of industries are already subject to the provisions requiring the use of these methods.

We invite comments on all aspects of the proposal and its impacts on small entities.

D. Unfunded Mandates Reform Act

Title II of the Unfunded Mandates Reform Act of 1995 (UMRA), Public Law 104–4, establishes requirements for Federal agencies to assess the effects of their regulatory actions on State, local, and tribal governments and the private sector. Under section 202 of the UMRA, EPA generally must prepare a written statement, including a cost-benefit analysis, for proposed and final rules with ''Federal mandates'' that may result in expenditures to State, local, and tribal governments, in the aggregate, or to the private sector, of $100 million or more in any one year. Before promulgating an EPA rule for which a written statement is needed, section 205 of the UMRA generally requires EPA to identify and consider a reasonable number of regulatory alternatives and adopt the least costly, most cost-effective or least burdensome alternative that achieves the objectives of the rule. The provisions of section 205 do not apply when they are inconsistent with applicable law. Moreover, section 205 allows EPA to adopt an alternative other than the least costly, most cost-effective or least burdensome alternative if the Administrator publishes with the final rule an explanation why that alternative was not adopted. Before EPA establishes any regulatory requirements that may significantly or uniquely affect small governments, including tribal governments, it must have developed under section 203 of the UMRA a small government agency plan. The plan must provide for notifying potentially affected small governments, enabling officials of affected small governments to have meaningful and timely input in the development of EPA regulatory proposals with significant Federal intergovernmental mandates, and informing, educating, and advising small governments on compliance with the regulatory requirements.

Today's rule contains no Federal mandates (under the regulatory provisions of Title II of the UMRA) for State, local, or tribal governments or the private sector. The rule imposes no enforceable duty on any State, local, or tribal governments or the private sector. In any event, EPA has determined that this rule does not contain a Federal mandate that may result in expenditures of $100 million or more for State, local, and tribal governments, in the aggregate, or the private sector in any one year. Thus, today's rule is not subject to the requirements of sections 202 and 205 of the UMRA.

E. Executive Order 13132—Federalism

Executive Order 13132, entitled ''Federalism'' (64 FR 43255, August 10, 1999), requires EPA to develop an accountable process to ensure ''meaningful and timely input by State and local officials in the development of regulatory policies that have federalism implications.'' ''Policies that have federalism implications'' are defined in the Executive Order to include regulations that have ''substantial direct effects on the States, on the relationship between the national government and the States, or on the distribution of power and responsibilities among the various levels of government.''

This rule does not have federalism implications. It will not have substantial direct effects on the States, on the relationship between the national government and the States, or on the distribution of power and responsibilities among the various levels of government, as specified in Executive Order 13132. Thus, the

requirements of section 6 of the Executive Order do not apply to this rule.

In the spirit of Executive Order 13132, and consistent with EPA policy to promote communications between EPA and State and local governments, EPA specifically solicits comment on this proposed rule from State and local officials.

F. Executive Order 13175—Consultation and Coordination with Tribal Governments

Executive Order 13175, entitled ''Consultation and Coordination with Indian Tribal Governments'' (65 FR 67249, November 6, 2000), requires EPA to develop an accountable process to ensure ''meaningful and timely input by tribal officials in the development of regulatory policies that have tribal implications.'' ''Policies that have tribal implications'' is defined in the Executive Order to include regulations that have ''substantial direct effects on one or more Indian tribes, on the relationship between the Federal government and the Indian tribes, or on the distribution of power and responsibilities between the Federal government and Indian tribes.''

This proposed rule does not have tribal implications. It will not have substantial direct effects on tribal governments, on the relationship between the Federal government and Indian tribes, or on the distribution of power and responsibilities between the Federal government and Indian tribes, as specified in Executive Order 13175. In this proposed rule, we are simply updating five emission test methods that applicable facilities are already subject to. Thus, Executive Order 13175 does not apply to this rule.

G. Executive Order 13045—Protection of Children From Environmental Health Risks and Safety Risks

Executive Order 13045 applies to any rule that EPA determines (1) is ''economically significant'' as defined under Executive Order 12866, and (2) the environmental health or safety risk addressed by the rule has a disproportionate effect on children. If the regulatory action meets both criteria, the Agency must evaluate the environmental health or safety effects of the planned rule on children and explain why the planned regulation is preferable to other potentially effective and reasonably feasible alternatives considered by the Agency.

The EPA interprets Executive Order 13045 as applying only to regulatory actions that are based on health or safety risks, such that the analysis required under section 5–501 of the Executive Order has the potential to influence the regulation. This final rule is not subject to Executive Order 13045, because it is not based on health or safety risks.

H. Executive Order 13211—Actions Concerning Regulations That Significantly Affect Energy Supply, Distribution, or Use

This action is not subject to Executive Order 13211, ''Actions Concerning Regulations That Significantly Affect Energy Supply, Distribution, or Use'' (66 FR 28355, May 22, 2001) because it is not a significant regulatory action under Executive Order 12866.

I. NTTAA—National Technology Transfer and Advancement Act

Section 12(d) of the National Technology Transfer and Advancement Act of 1995 (NTTAA), Public Law 104–113 (15 U.S.C. 272), directs us to use voluntary consensus standards (VCSs) in our regulatory activities unless to do so would be inconsistent with applicable law or otherwise impractical. Voluntary consensus standards are technical standards (*e.g.*, materials specifications, test methods, sampling procedures, business practices, *etc.*) that are developed or adopted by VCS bodies. The NTTAA requires us to provide Congress, through OMB, explanations when we decide not to use available and applicable VCSs. We are not proposing new test methods in this rulemaking but are revising and updating methods that have already been mandated for evaluating compliance with current emission standards. Therefore, NTTAA does not apply.

List of Subjects in 40 CFR Part 60

Environmental protection, Air pollution control, New sources, Test methods and procedures, Performance specifications, Continuous emission monitors.

Dated: September 24, 2003.

Marianne Lamont Horinko,

Acting Administrator.

For the reasons stated in the preamble, the Environmental Protection Agency proposes to amend title 40, chapter I of the Code of Federal Regulations as follows:

PART 60—STANDARDS OF PERFORMANCE FOR NEW STATIONARY SOURCES

1. The authority citation for part 60 continues to read as follows:

Authority: 42 U.S.C. 7401, 7411, 7413, 7414, 7416, 7601, and 7602.

Appendix A—Test Methods [Amended]

2. By revising Methods 3A, 6C, 7E, 10, and 20 to read as follows:

Appendix A to Part 60—Test Methods

* * * * *

Method 3A—Determination of Oxygen and Carbon Dioxide Emissions From Stationary Sources (Instrumental Analyzer Procedure)

1.0 Scope and Application

What Is Method 3A?

Method 3A is a procedure for measuring oxygen (O_2) and carbon dioxide (CO_2) in stationary source emissions using a continuous instrumental analyzer. Quality assurance and quality control requirements are included to assure that you, the tester, collect data of known quality. You must document your adherence to these specific requirements for equipment, supplies, sample collection and analysis, calculations, and data analysis.

This method does not completely describe all equipment, supplies, and sampling and analytical procedures you will need but refers to other methods for some of the details. Therefore, to obtain reliable results, you should also have a thorough knowledge of these additional test methods:

(1) Method 1—Sample and Velocity Traverses for Stationary Sources.

(2) Method 3—Gas Analysis for the Determination of Molecular Weight.

(3) Method 4—Determination of Moisture Content in Stack Gases.

(4) Method 7E—Determination of Nitrogen Oxides Emissions From Stationary Sources (Instrumental Analyzer Procedure).

All methods in this list appear in 40 CFR part 60, appendix A.

1.1 Analytes. *What does this method determine?*

Analyte	CAS No.	Sensitivity
Oxygen (O_2)	7782–44–7	*See* Discussion in section 1.3.
Carbon dioxide (CO_2)	124–38–9	*See* Discussion in section 1.3.

1.2 Applicability. *When is this method required?* Method 3A is a requirement in specific New Source Performance Standards, Clean Air Marketing Rules, and State Implementation Plans and Permits where measuring O_2 and CO_2 concentrations in

emissions and performance testing continuous emission monitors at stationary sources is required. Other regulations may also identify its use.

1.3 Data Quality Objectives. *How good must my collected data be?* Refer to section 1.3 of Method 7E.

2.0 Summary of Method

Using continuous or intermittent sampling, you extract a gas sample from the emissions unit under investigation. You then convey the sample to a gas analyzer and measure the concentration of O_2 or CO_2. You must adhere to the performance requirements to validate your data.

3.0 Definitions

3.1 The Analyzer Calibration Error, Calibration Curve, Calibration Gas, High-Level Gas, Mid-Level Gas, Low-Level Gas, Data Recorder, Gas Analyzer, Interference Check, Measurement System, Response Time, Sampling System, and Sampling System Bias are the same as in sections 3.0 of Method 7E.

4.0 Interferences [Reserved]

5.0 Safety

Refer to section 5.0 of Method 7E.

6.0 Equipment and Supplies

Figure 7E–1 in Method 7E is a schematic diagram of an acceptable measurement system. You must use a measurement system for O_2 and CO_2 that meets the following specifications for the essential components.

6.1 Sample Probe, Particulate Filter, Heated Sample Line, Sample Line, Moisture Removal System, Sample Pump, Flow Control/Gas Manifold, Sample Gas Manifold, and Data Recorder. You must follow the noted specifications in section 6.1 of Method 7E.

6.2 Analyzer. An instrument that continuously measures O_2 or CO_2 in the gas stream and meets the specifications in section 13.0.

7.0 Reagents and Standards

7.1 Calibration Gas. *What calibration gases do I need?* Refer to section 7.1 of Method 7E for the calibration gas requirements. You have five options for the calibration gas. The tests for analyzer calibration error and sampling system bias require span, mid-, and low-level gases.

(a) CO_2 in nitrogen (N_2).

(b) CO_2 in air.

(c) CO_2/SO_2 gas mixture in N_2.

(d) O_2/SO_2 gas mixture in N_2.

(e) $O_2/CO_2/SO_2$ gas mixture in N_2.

7.2 Interference Check. *What reagents do I need for the interference check?* Use the reagents listed in Table 7E–1 of Method 7E to conduct the interference check.

8.0 Sample Collection, Preservation, Storage, and Transport

Emission Test Procedure

8.1 Sampling Site and Sampling Points. You must follow section 8.1 of Method 7E.

8.2 Measurement System Performance Tests. You must follow the calibration gas verification, measurement system preparation, analyzer calibration error test, initial sampling system bias check, response time, Interference Check, and validation of runs procedures in sections 8.2 and 8.3 of Method 7E.

8.3 Sample Collection. Follow the procedures in section 8.4 of Method 7E.

8.4 Validation of Runs. Follow section 8.5 of Method 7E.

9.0 Quality Control

Follow quality control procedures in section 9.0 of Method 7E.

10.0 Calibration and Standardization

Follow the procedures for calibration and standardization in section 10.0 of Method 7E.

11.0 Analytical Procedures

Because sample collection and analysis are performed together (*see* section 8), additional discussion of the analytical procedure is not necessary.

12.0 Calculations and Data Analysis

You must follow the procedures for calculations and data analysis in section 12.0 of Method 7E.

13.0 Method Performance

13.1 The Analytical Range, Sensitivity, Analyzer Calibration Error, Response Time, Interference Test, and Alternative Dynamic Spike Check specifications are the same as in section 13.0 of Method 7E.

13.2 Sampling System Bias. The pre- and post-run sampling system bias must be within ±3 percent of the manufacturer certified concentration for the mid- and span-level calibration gases and less than ±0.25 percent of upper range.

14.0 Pollution Prevention [Reserved]

15.0 Waste Management [Reserved]

16.0 Alternative Procedures

16.1 Dynamic spiking procedure and manufacturer's stability test. These procedures are the same as in section 16 of Method 7E.

17.0 References

1. ''EPA Traceability Protocol for Assay and Certification of Gaseous Calibration Standards'' September 1997 as amended, EPA–600/R–97/121.

18.0 Tables, Diagrams, Flowcharts, and Validation Data

* * * * *

Method 6C—Determination of Sulfur Dioxide Emissions From Stationary Sources (Instrumental Analyzer Procedure)

1.0 Scope and Application

What is Method 6C?

Method 6C is a procedure for measuring sulfur dioxide (SO_2) in stationary source emissions using a continuous instrumental analyzer. Quality assurance and quality control requirements are included to assure that you, the tester, collect data of known quality. You must document your adherence to these specific requirements for equipment, supplies, sample collection and analysis, calculations, and data analysis. This method does not completely describe all equipment, supplies, and sampling and analytical procedures you will need but refers to other methods for some of the details. Therefore, to obtain reliable results, you should also have a thorough knowledge of these additional test methods:

(a) Method 1—Sample and Velocity Traverses for Stationary Sources.

(b) Method 3A—Determination of Oxygen and Carbon Dioxide Concentrations in Emissions from Stationary Sources (Instrumental Analyzer Procedure).

(c) Method 4—Determination of Moisture Content in Stack Gases.

(d) Method 6—Determination of Sulfur Dioxide Emissions from Stationary Sources.

All methods in this list appear in 40 CFR part 60, appendix A.

1.1 Analytes. *What does this method determine?*

Analyte	CAS No.	Sensitivity
SO_2	7446–09–5	*See* discussion in section 1.3.

1.2 Applicability. *When is this method required?* Method 6C is required in specific New Source Performance Standards, Clean Air Marketing rules, and State Implementation Plans and permits where measuring SO_2 concentrations in stationary source emissions is required. Other regulations may also require its use.

1.3 Data Quality Objectives. Refer to section 1.3 of Method 7E.

2.0 Summary of Method

In this method, you continuously sample the emission gas and convey the sample to an analyzer that measures the concentration of SO_2. Properly designed and operated analyzers based on ultraviolet, nondispersive infrared, or fluorescence detection principles have been used successfully. Analyzers based on other detection principles may be acceptable, however you must meet the performance requirements of this method regardless of type of detector principle used.

3.0 Definitions

3.1 The Analyzer Calibration Error, Calibration Curve, Direct Calibration, System Calibration, Calibration Gas, Data Recorder, Gas Analyzer, Measurement System, Range, Response Time, Sampling System Bias, and Span are the same as in sections 3.0 of Method 7E.

3.2 *Interference check* means a test intended to detect analyzer responses to things other than the compound of interest, usually a gas present in the measured gas stream, that is not adequately accounted for in the calibration procedure and hence results in excessive bias.

4.0 Interferences [Reserved]

5.0 Safety

Refer to section 5.0 of Method 7E.

6.0 Equipment and Supplies

Figure 7E–1 of Method 7E is a schematic diagram of an acceptable measurement system. You must use a measurement system for SO_2 that meets the following specifications for the essential components.

6.1 *What do I need for the measurement system?* Sample Probe, Particulate Filter, Heated Sample Line, Sample Lines, Moisture Removal System, Sample Pump, Flow Control/Gas Manifold, Sample Gas Manifold, and Data Recorder. You must follow the noted specifications in section 6.1 of Method 7E.

6.2 SO_2 Analyzer. An instrument that uses an ultraviolet, nondispersive infrared, fluorescence, or other detection principal to continuously measure SO_2 in the gas stream and meets the specifications in section 13.0. The dual-range analyzer provisions of section 6.1.8.1 of Method 7E apply.

6.3 *What additional equipment do I need for the interference check?* Use the apparatus described in section 6.0 of Method 6. Figure 6C–2 illustrates the interference check sampling train. In cases where the emission concentrations are less than 15 ppm, the alternative interference check detailed in section 16.1 should be used.

7.0 Reagents and Standards

7.1 Calibration Gas. *What calibration gases do I need?* Refer to section 7.1 of Method 7E for the calibration gas requirements.

You have five options for your calibration gas.

(a) SO_2 in nitrogen (N_2).

(b) SO_2 in air.

(c) SO_2 and CO_2 in N_2.

(d) SO_2 and O_2 in N_2.

(e) $SO_2/CO_2/O_2$ gas mixture in N_2.

7.2 Additional Calibration Gas Requirements When Using a Fluorescence Analyzer. When you use a fluorescence-based analyzer and calibration gas (c), (d), or (e), the O_2 or CO_2 concentration in your calibration gas must be within 1 percent (absolute) of the O_2 (CO_2) concentration in the effluent sample. If you use a fluorescence-based analyzer and a calibration gas that is SO_2 in air, you may use the nomographs provided by the gas vendor to determine the quenching correction factor. You must know the concentrations of O_2 and CO_2 in the effluent.

7.3 Interference Check. *What additional reagents do I need for the interference check?* Use the reagents described in section 7.0 of Method 6 to conduct the interference check. For gas concentration less than 15 ppm, the test gases for the alternative interference check are listed in Table 7E–3 of Method 7E.

7.3.1 Alternative Analyzer Interference Check. As an alternative to the above, you may conduct an alternative interference check by sequentially introducing the gases listed in Figure 7E–3 of Method 7E (one at a time) both with and without SO_2 into the calibrated analyzer and recording the apparent concentrations after waiting at least 3 times the analyzer response time. This is then repeated with a blend containing a known SO_2 concentration greater than 80 percent of the analyzer's range and calculating the difference between the known value and the apparent concentration. For each potential interferent gas, identify the largest of the 2 absolute values as the potential interference. The interference for all potential interferent gases in the source category must be less than 2.5 percent of the upper range limit to be acceptable. Record the data on a form similar to Figure 6C–8.

8.0 Sample Collection, Preservation, Storage, and Transport

Emission Test Procedure

8.1 Sampling Site and Sampling Points. You must follow section 8.1 of Method 7E.

8.2 Measurement System Performance Tests. You must follow the Calibration Gas Verification, Measurement System Preparation, Analyzer Calibration Error Test, Initial Sampling System Bias Check, and Measurement System Response Time procedures in section 8.2 of Method 7E.

8.3 Interference Check. You must conduct an interference check consisting of at least three runs before or during the initial field test of a particular source category (type of facility). This interference check must be repeated yearly on each individual gas analyzer. When testing under conditions of low concentrations (<15 ppm), the alternative interference check in section 16.1 must be used; it is an acceptable alternative in other applications. For the interference check, build the modified Method 6 sampling train (flow control valve, two midget impingers containing 3 percent H_2O_2, and dry gas meter) shown in Figure 6C–2. Connect the sampling train to the sample bypass discharge vent. Record the dry gas meter reading before you begin sampling. Simultaneously collect modified Method 6 and Method 6C samples. Open the flow control valve in the modified Method 6 train as you begin to sample with Method 6C. Adjust the Method 6 sampling rate to 1 liter per minute (±10 percent). If your modified Method 6 train does not include a pump, you risk biasing the results high if you over-pressurize the midget impingers and cause a leak. You can reduce this risk by cautiously increasing the flow rate as sampling begins. After completing a run, record the final dry gas meter reading, meter temperature, and barometric pressure. Recover and analyze the contents of the midget impingers using the procedures in Method 6. (You do not need to analyze performance audit samples with this interference check.) Determine the average valid gas concentration reported by Method 6C for the run.

8.4 Sample Collection. Follow section 8.1. Sample within 5 percent of the rate you used during the sampling system bias check

8.5 Post-Run Sampling System Bias Check and Alternative Dynamic Spike Procedure. Follow sections 8.5 and 8.6 of Method 7E.

9.0 Quality Control

Follow quality control procedures in section 9.0 of Method 7E.

10.0 Calibration and Standardization

Follow the procedures for calibration and standardization in section 10.0 of Method 7E.

11.0 Analytical Procedures

Because sample collection and analysis are performed together (*see* section 8), additional discussion of the analytical procedure is not necessary.

12.0 Calculations and Data Analysis

You must follow the procedures for calculations and data analysis in section 12.0 of Method 7E as applicable.

13.0 Method Performance

13.1 The Analytical Range, Sensitivity, System Response and Minimum Sampling Times, Analyzer Calibration Error, Sampling System Bias, and Alternative Dynamic Spike Check specifications are the same as in section 13.0 of Method 7E.

13.2 Interference Test. Documentation of successful completion, within the last 12 months at the specific source category, where the difference between the analyzer and the modified Method 6 result is less than 7 percent of the modified Method 6 result for each of a minimum of 3 runs.

13.3 Alternative Interference Check. Same as in section 13.6 of Method 7E.

14.0 Pollution Prevention [Reserved]

15.0 Waste Management [Reserved]

16.0 Alternative Procedures

16.1 Alternative Interference Check. The interference check detailed in section 8.3 of Method 7E may be used as an alternative interference check.

16.2 Dynamic Spiking Procedure, Manufacturer's Stability Test and Annual Primary Interference Recheck (as applicable). These procedures are the same as in section 16 of Method 7E.

17.0 References

1. ''EPA Traceability Protocol for Assay and Certification of Gaseous Calibration Standards'' September 1997 as amend, EPA–600/R–97/121.

18.0 Tables, Diagrams, Flowcharts, and Validation Data

BILLING CODE 6560–50–P

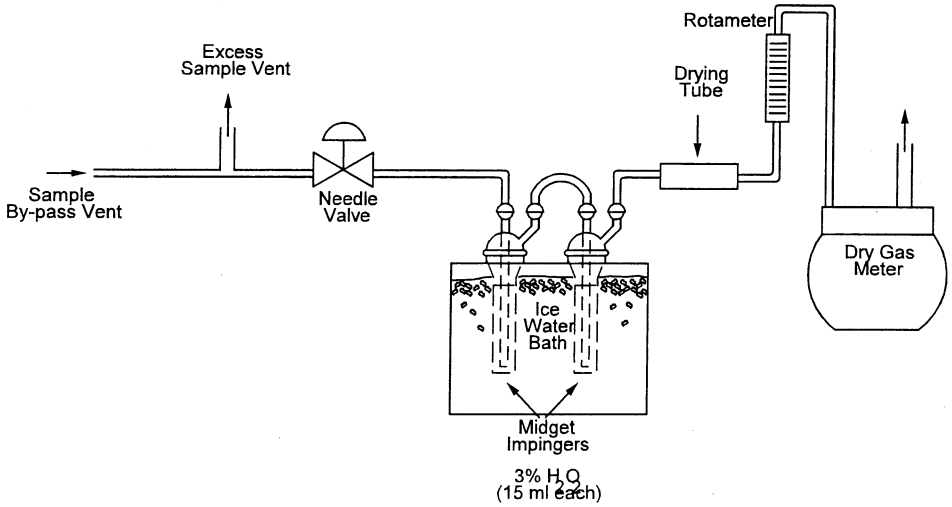

Figure 6C-1. Interference Check Sampling Train.

BILLING CODE 6560–50–C

* * * * *

Method 7E—Determination of Nitrogen Oxides Emissions From Stationary Sources (Instrumental Analyzer Procedure)

1.0 Scope and Application

What Is Method 7E?

Method 7E is a procedure for measuring nitrogen oxides (NO_X) in stationary source emissions using a continuous instrumental analyzer. Quality assurance and quality control requirements are included to assure that you, the tester, collect data of known quality. You must document your adherence to these specific requirements for equipment, supplies, sample collection and analysis, calculations, and data analysis. This method does not completely describe all equipment, supplies, and sampling and analytical procedures you will need but refers to other methods for some of the details. Therefore, to obtain reliable results, you should also have a thorough knowledge of these additional test methods:

(a) Method 1—Sample and Velocity Traverses for Stationary Sources.

(b) Method 4—Determination of Moisture Content in Stack Gases.

1.1 Analytes. *What does this method determine?* (All methods in this list appear in 40 CFR part 60, appendix A.)

Analyte	CAS No.	Sensitivity
Nitric oxide (NO)	10102–43–9	*See* discussion in section 1.3.
Nitrogen dioxide (NO_2)	10102–44–0	

1.2 Applicability. *When is this method required?* Method 7E is required in specific New Source Performance Standards, Clean Air Marketing Rules, and State Implementation Plans and Permits where measuring NO_X concentrations in stationary source emissions is required. Other regulations may also require its use.

1.3 Data Quality Objectives (DQO). *What quality of data is this method designed to produce?* The data quality objectives define the quality of data you need for the test. Method 7E is designed for determining compliance with Federal and State emission standards. For this purpose, data acceptability is evaluated through performance tests whose accuracy is determined relative to the applicable emission standard concentration. Therefore, the quality of data is emphasized at the compliance concentration levels. However, we do not intend the method to penalize you for calibrating to measure accurately emissions well below the emission limit. In applications where there is no emission limitation (*e.g.,* market-based programs), acceptable performance is based on the span instead of the emission standard. You are required to calculate and report an uncertainty estimate for your data. This encourages the use of better technology and techniques but does not require it when not needed by your DQO. This uncertainty provides data quality information for future secondary data users.

1.3.1 Data Quality Assessment. It is possible to meet the method QA/QC requirements and still not be certain you are making the correct data decision. This is a phenomena with all measurements since measurements are inherently an estimate of the true value no matter how precisely and accurately they are made. However, by separating the reporting of measured data and uncertainty estimates, the method provides the data users various options to assess the data quality when the tester deviates from the procedures. For example, the data user might decide to look at the upper uncertainty estimate if the question of concern is ''Am I sure the average emissions are less than an emission limit?'' or at the lower uncertainty estimate if the question of concern is ''Am I sure the average emissions are greater than an emission limit?'' Data of lesser quality may be accepted if the data user deems the testing objectives are met. For example, if the measured average emissions are less than the emission limit but a small fraction of the data exceeded the analyzer range, the data user may choose to accept this data as adequate to show compliance with the emission limit. The regulating agency is considered the data user and therefore makes the final assessment of data quality.

1.3.2 Data Quality Assessment for low emitters. *Is performance relief granted to low-emission units?* Yes, there are interim special sampling system bias performance criteria and allowances to use the alternative interference check and dynamic spike procedures. You should refer to section 13 for an explanation.

1.3.3 *How is the calibration designed when test units are covered by more than one*

emission limit? In most cases where an emission unit is subject to more than one emission limit, the analysis should be designed for the most stringent limit. An emission unit that is shown to be in compliance with the most stringent limit when the analysis is designed in this way is also in compliance with the other applicable limits.

2.0 Summary of Method

In this method, you continuously sample the emission gas and convey the sample to an analyzer that measures the concentration of NO_X. You may measure NO and NO_2 separately or simultaneously together but, for purposes of this method, NO_X is the sum of NO and NO_2. You must adhere to the performance requirements of this method to validate your data.

3.0 Definitions

3.1 *Analyzer calibration error* means the difference between the manufacturer certified calibration gas concentration and the concentration reported by the analyzer in direct calibration mode.

3.2 *Calibration curve* means the relationship between the analyzer's response and the concentration of the gas introduced to the analyzer over the calibration range of the analyzer.

3.2.1 *Direct Calibration* means introducing the calibration gases directly to the analyzer according to manufacturer's published calibration procedure.

3.2.2 *System Calibration* means introducing the calibration gases into the measurement system at the probe and upstream of all sample conditioning components.

3.3 *Calibration gas* means the gas mixture containing NO_X at a concentration of known pedigree and produced and certified in accordance with ''EPA Traceability Protocol for Assay and Certification of Gaseous Calibration Standards,'' September 1997, as amended August 25, 1999, EPA–600/R–97/121. The tests for analyzer calibration error and sampling system bias require a span-, mid-, and low-level calibration gases.

3.4 *Converter Efficiency Gas* means a calibration gas with a known NO_2 concentration.

3.5 *Data recorder* means the equipment that permanently records the concentrations reported by the analyzer.

3.6 *Gas analyzer* means the equipment that senses the gas being measured and generates an output proportional to its concentration.

3.7 *Interference check* means the test intended to detect analyzer responses to things other than the compound of interest, usually a gas present in the measured gas stream, that is not adequately accounted for in the calibration procedure and hence results in excessive bias.

3.8 *Measurement system* means all the equipment used to determine the NO_X concentration. The measurement system comprises six major subsystems: Acquisition, sample transport, sample conditioning, flow control/gas manifold, gas analyzer, and data recorder.

3.9 *Range* means the interval between the nominal minimum and maximum concentration that the gas analyzer manufacturer cites for the analyzer full-scale response. Gas analyzers that have single-range or multiple-range capability with either automated or manual switching are potentially acceptable. The range must be at least 5 percent greater than the concentration of the span-level gas you use to calibrate the analyzer, so that sampling system bias can be determined.

3.10 *Response time* is the time it takes the data acquisition system to read 95 percent of the stable reading from a step change in concentration when the sampling system is operating at its design flow rate.

3.11 *Sampling system bias* means the difference between the manufacturer certified calibration gas concentration and the concentration the analytical system gives for the same gas when it is introduced in system calibration mode, divided by the emission standard.

3.12 *Span* means the highest concentration of the calibration curve and is synonymous with the concentration of the highest calibration gas. In most cases, the span will be higher than the concentration of the emission standard.

4.0 Interferences [Reserved]

5.0 Safety

What safety measures should I consider when using this method? This method may require you to work with hazardous materials and in hazardous conditions. We encourage you to establish safety procedures before using this method. Among other precautions, you should become familiar with the safety recommendations in the gas analyzer user's manual. Occupational Safety and Health Administration (OSHA) regulations may also apply to you.

6.0 Equipment and Supplies

The performance criteria in this method will be met or exceeded most of the time if you are properly using equipment designed for this application.

6.1 *What do I need for the measurement system?* Figure 7E–1 is a diagram of an example measurement system. You may use alternative equipment and supplies provided (1) your sample flow rate is maintained within 5 percent of the design flow rate, (2) the probe, filter, and the sample line from the sample probe to the moisture removal system (if necessary) is constructed of materials which do not absorb or otherwise alter the sample gas and are heated to at least 140 °C (284 °F) or 25 °C (77 °F) above the concentration dew point of the sample, whichever is higher, to prevent condensation, and (3) the interference and sampling system bias criteria are met. An NO_X measurement system that meets the following specifications is likely to meet the interference and sampling system bias requirements and are provided as guidance. The essential components of the measurement system are described below:

6.1.1 Sample Probe (Stinger). Glass, stainless steel, or equivalent, of sufficient length to traverse the sample points. The sampling probe must reach all sample points and be heated to at least 140 °C (284 °F) to prevent condensation or 25 °C (77 °F) above the concentration dew point of the sample, whichever is higher.

6.1.1.1 Particulate Filter. An in-stack or out-of-stack filter. The probe filter and all flow components located at the probe must be heated to at least 140 °C (284 °F) or 25 °C (77 °F) above the dew point of the sample, whichever is higher. The filter media must be included in the sampling system bias test and be made of materials that are nonreactive to the gas being sampled.

6.1.2 Heated Sample Line. The sample line from the probe to the moisture removal system (if necessary) and to the sample pump should be made of stainless steel, teflon, or other material that does not absorb or otherwise alter the sample gas. Heat the sample line between the probe and moisture removal system to at least 140 °C (284 °F) to prevent condensation or 25 °C (77 °F) above the dew point of the sample, whichever is higher.

6.1.3 Sample Lines. Stainless steel or Teflon tubing to transport the sample from the moisture removal system to the flow control gas manifold.

6.1.4 Moisture Removal System. A thermo-electric type condenser or similar device to remove condensate continuously from the sample gas while maintaining minimal contact between the condensate and the sample gas. The gas temperature at the outlet of the drier must be <60 °F (15 °C) as measured in the drier outlet tubing, and the drier outlet gas dew point temperature must be maintained equal to or less than 41 °F (5 °C). The moisture removal system is not necessary for analyzers that measure gas concentrations on a wet basis. For these analyzers (1) heat the sample line and all sample transport components up to the inlet of the analyzer to at least 140 °C (284 °F) or 25 °C (77 °F) above the concentration dew point of the sample, whichever is higher, to prevent condensation, and (2) determine the moisture content and correct the measured gas concentrations to a dry basis using appropriate methods, subject to the approval of the Administrator. You do not need to determine sample moisture content if your analyzer measures concentration on a wet basis when (1) a wet basis CO_2 analyzer operated according to Method 3A is used to obtain simultaneous measurements, and (2) the pollutant/CO_2 measurement system is used to determine emissions in units of the standard. The wet analyzer must pass the same sampling system bias check as the dry measurement system. The sampling system bias check must include the same water (±1 percent absolute) concentration found in the sample.

6.1.5 Sample Pump. A leak-free pump to pull the sample gas through the system at a flow rate sufficient to minimize the response time of the measurement system. The pump may be constructed of any material that is nonreactive to the gas being sampled.

6.1.6 Flow Control/Gas Manifold. An assembly of manual or solenoid valves to allow the introduction of calibration gases either directly to the gas analyzer in direct mode, or into the measurement system, at the probe, in system mode. A calibration valve assembly, three-way valve assembly, or equivalent, for blocking the sample gas flow

and introducing calibration gases directly to the gas analyzers, and a valve to flow calibration gas through the entire measurement system, flooding the sampling probe when in the system mode (for bias check). Use either a flow control valve and rotameter or an equivalent valve. Use a back-pressure regulator, or equivalent, to maintain constant pressure in the sample gas manifold.

6.1.7 Sample Gas Manifold. The sample gas manifold diverts a portion of the sample to the analyzer, delivering the remainder to the by-pass discharge vent. The manifold should also be able to introduce calibration gases directly to the analyzer. The manifold must be made of material that does not react with NO_X or the calibration gas and be configured to safely discharge the bypass gas.

6.1.8 NO_X analyzer. An instrument that continuously measures NO_X in the gas stream and meets the specifications in section 13.0. Analyzers that operate on the principle of chemiluminescence with an NO_2 to NO converter have been used to successfully meet the performance criteria in the past. Analyzers operating on other principles may also be used provided the performance criteria are met.

6.1.8.1 Dual Range Analyzers. Some manufacturers may certify a gas analyzer with a single large range which you may use with proper data recorders as two separate analyzers if you use the proper sets of calibration gases and meet the interference, analyzer calibration error, and sampling system bias checks. However, we caution you that the larger range affects the sensitivity in some analyzers and this may affect your ability to meet the performance requirements when operated on the lower range.

6.1.9 Data Recording. A strip chart recorder, analog computer, digital recorder, or data logger for recording measurement data. The data recording resolution (*i.e.*, readability) must be no larger than 0.5 percent of span. Alternatively, a digital or analog meter having a resolution no larger than 0.5 percent of span may be used, and the readings may be recorded manually. If this alternative is used, the readings must be from equally spaced intervals of no more than 1 minute over the duration of the sampling run.

7.0 Reagents and Standards

7.1 Calibration Gas. *What calibration gases do I need?* Your calibration gas must be certified in accordance with ''EPA Traceability Protocol for Assay and Certification of Gaseous Calibration Standards'' September 1997, as amended August 25, 1999, EPA–600/R–97/121. The calibration gas certification (or recertification) must be complete and the test must be completed before the expiration date. The goal is to bracket the sample concentrations and have at least one calibration gas below and one above the measurements. Use a minimum of the following calibration gas concentrations:

7.1.1 Span-Level Gas. The span-level gas sets the analyzer span which is the maximum concentration that is considered potentially valid for a test.

7.1.2 Mid-Level Gas. The mid-level gas must have a concentration that is 20 to 70 percent of the concentration of the span-level gas.

7.1.3 Low-Level Gas. The low-level gas must have a concentration that is less than 20 percent of the span-level gas.

7.1.4 Converter Efficiency Gas. The converter efficiency gas must have a concentration of NO_2 that is within 50 percent of the measured NO_2 concentration.

7.2 Interference Check. *What additional reagents do I need for the interference check?* Use the test gases listed in table 7E–3 to conduct the interference check.

8.0 Sample Collection, Preservation, Storage, and Transport

Emission Test Procedure

Since you are allowed to choose different options to comply with some of the performance criteria, it is your responsibility to identify the specific options you followed, document your meeting the performance criteria and frequency for that option, or identify any deviations from the method.

8.1 *What sampling site and sampling points do I select?*

8.1.1 Unless otherwise specified in an applicable regulation or by the administrator, use the traverse points listed in and located according to Method 1. Alternatively, you may conduct a stratification test as described in section 8.1.3 to determine if fewer traverse points may be used. For performance testing of continuous emission monitoring systems, follow the sampling site procedures in the appropriate performance specification or applicable regulation.

8.1.2 General Sampling Point Requirements. Traverse all sampling points you choose from above, and sample at each point for an equal length of time. Record the sampling data. If you are comparing the data from individual traverse points as in the stratification test, you must delay recording data at each point for 2 times the system response time. The minimum time you must sample at each point is 2 times the system response time. You must record data at least every minute. Usually the test is designed for sampling longer than 1 minute per point to better characterize the source's temporal variability. If the test is designed such that the sampling time for each point is greater than 10 times the system response time, then you may start recording data at the first traverse point after purging the system at least 2 times the system response time. After recording for the designed period of time, you may move to the next traverse point and continue recording, omitting the requirement to delay recording for 2 times the system response at the subsequent traverse points. However, you must recondition the sampling system for at least 2 times the system response time prior to recording at the next traverse point if you remove the probe from the stack. You may satisfy the multipoint traverse requirement by sampling sequentially using a single-hole probe or a multi-hole probe designed to sample from each hole at the same (±10 percent of mean) flow rate.

8.1.3 Determination of Stratification. If the results of a stratification test show your unit to be unstratified, you may traverse at fewer points than required by Method 1. To test for stratification, use a probe of appropriate length to measure the NO_X and diluent (O_2 or CO_2) concentrations at each traverse point selected according to Method 1. Calculate the individual point and mean NO_X concentrations, corrected for diluent. If the range of average dilution-corrected concentrations for all points is less than or equal to ±5 percent of the mean concentration, you may collect samples from a single point that most closely matches the mean. Alternatively, if the range of the individual traverse point concentrations, corrected for dilution, is equal to or less than ±10 percent of the mean, you may take samples from 3 or more points on one diameter provided the points are located on the diameter of the stack exhibiting the highest average concentration during the stratification test. Space the points at 16.7, 50.0, and 83.3 percent of the measurement line (*i.e.,* divide the diameter into equal length segments and sample at their midpoints.)

8.2 Measurement System Performance Tests. *What initial performance criteria must my system meet before I begin collecting samples?* Before measuring emissions, perform the following procedures:

a. Calibration gas verification;

b. Measurement system preparation and analyzer calibration error test;

c. NO_2 to NO conversion efficiency test, if applicable;

d. Initial sampling system bias check;

e. System response time test; and

f. Interference check.

8.2.1 Calibration gas verification. *How must I verify the concentrations of my calibration gases?* Obtain a certificate from the gas manufacturer and confirm that the documentation includes all information required by the Traceability Protocol. Confirm that the manufacturer certification is complete and current.

8.2.2 Measurement system preparation. *How do I prepare my measurement system?* Assemble, prepare, and precondition the measurement system according to your standard operating procedure. Achieve the correct sampling rate. Ensure that your calibration gases are in the proper range and will result in the measured emissions being between 20 and 100 percent of the span. Perform a direct calibration of the gas analyzer (*see* section 10.1), and conduct the analyzer calibration error test.

8.2.3 Analyzer Calibration Error Test. *How do I confirm my analyzer calibration is correct?* After you have calibrated your analyzer according to the manufacturer recommended procedure, you must conduct an analyzer calibration error test before the first run and again after any failed sampling system bias tests. In this test you introduce the same low-, mid-, and span gases (that you just used to calibrate the analyzer in direct calibration mode) into the measurement system at any point upstream of the analyzer but preferably again in direct calibration mode. You must maintain the correct flow rate at the analyzer, but do not make adjustments for any other purpose. Record the analyzer's response to each calibration gas on a form similar to table 7E–1. For each calibration gas, calculate the analyzer

calibration error as the difference between the measured concentration and the manufacturer certified concentration. The difference should be less than 2 percent of the manufacturer certified concentration for the low-, mid-, and span gases.

8.2.4 NO_2 to NO Conversion Efficiency Test. You must conduct an NO_2 to NO conversion efficiency test on all analyzers whose measurement principal converts NO_2 to NO before analyzing for NO_X. Introduce a known concentration of NO_2 to the analyzer in direct calibration mode and record the stable gas concentration displayed by the analyzer. (**Note:** Because the measurement data uncertainty calculation adjusts for converter efficiencies less than 100 percent and because the converter efficiency may change with concentration, we suggest the known concentration introduced be within a range of 50–150 percent of the average measured concentration.) Alternatively, the procedure for determining conversion efficiency using NO in 40 CFR 86.123–78 may be used. For those analyzers whose measurement principal detects NO_2 in the sample directly without a converter, this requirement is waived because the calibration gas requirements will assure adequate accounting for NO_2.

8.2.5 Initial Sampling System Bias Check. Begin by introducing the span-level calibration gas (or mid-level gas if closer to the emissions concentration) in system calibration mode. Record the gas concentration displayed by the analyzer and the time it takes to reach a stable value on a form similar to Table 7E–2. A value is considered stable when the maximum difference between 3 consecutive recordings is not more than 0.5 percent of certified value and the mean is at least 97 percent of the certified value. Then introduce the zero gas in system calibration mode and similarly record the gas concentration displayed by the analyzer and the time it takes the measurement system to decrease to a stable zero value from the higher value. Operate the measurement system at the normal sampling rate. Make only the adjustments necessary to achieve proper calibration gas flow rates at the analyzer. First, calculate the measurement system response time (*see* section 8.2.6) and then calculate the sampling system bias (*see* section 12.5). *See* sections 13.3 and 13.5 for acceptable performance criteria. If sampling system bias is excessive, take corrective action until an acceptable performance is achieved. You must repeat the analyzer calibration error test and sampling system bias check whenever a sampling system bias check is excessive. You must also repeat the sampling system bias check at the end of each run.

8.2.6 Measurement System Response Time. You must determine the measurement system response time during the initial sampling system bias check. Observe the times required to achieve 95 percent of a stable response for both the low- and high-level gases. The longer interval is the response time.

8.3 Interference Check. Conduct an interference response test of the gas analyzer prior to its initial use in the field. Recheck the analyzer if you make changes that could alter the interference response (*e.g.*, a change in the gas detector). You can introduce the interference test gases (*see* Table 7E–3) into the measurement system separately or as mixtures. This test must be performed both with and without NO_X (NO and NO_2) which should be at a concentration of at least 80 percent of the analyzer range. Measure the total interference response of the system to these gases in ppmv. Record the responses and determine the interference using Table 7E–4. A copy of this data including the date completed and signed certification must be included. This interference test is valid for 1 calendar year unless major analytical components are replaced. If major components are replaced, the annual primary interference gas recheck described in section 16.3 must be performed before returning the analyzer to service. You must conduct the primary interference gas recheck on an annual basis.

8.4 Sample Collection. Collect samples following section 8.1. Sample within 5 percent of the rate you used during the sampling system bias check.

8.5 Post-Run Sampling System Bias Check. *How do I confirm that each sample I collect is valid?* After each run, repeat the sampling system bias check to validate the run. Do not make adjustments (other than to attain the design sampling rate) to the measurement system between the run and completion of the sampling system bias check. If you do not pass this post-run sampling system bias test, then the run does not meet this method?s quality assurance. To meet this method's quality assurance requirements, you must fix the problem, pass another analyzer calibration error test and sampling system bias test before repeating the run. Record the bias test results on a form similar to Table 7E–2.

8.6 Alternative Dynamic Spike Procedure. *If I want to use the dynamic spike procedure to validate my data, what procedure should I follow?* You may comply with the dynamic spiking procedure and requirements provided in section 16.2 during each test as an alternative to the analyzer calibration error test and the pre- and post-run sampling system bias checks.

9.0 Quality Control

What is a summary of the quality control measures I must take?

SUMMARY TABLE OF QA/QC

Status	Process or element	QA/QC specification	Acceptance criteria	Checking frequency	Suggested corrective action
S [1]	Identify Data User		Regulatory Agency or other primary end user of data.	Before designing test.	
M [2]	Analyzer Design	Analyzer range	Sufficiently > than span-level gas to determine sampling system bias.		Use different analyzer or reduce span value.
S		Analyzer resolution or sensitivity.	< 2% of range	Manufacturer design	Use different analyzer.
S		Analyzer response time	< 30 Seconds.		
M		Interference gas check	< 2.5% of upper range limit *See* Table 7E–3.	Valid for 1 year.	
M	Calibration Gases	Traceability protocol (G1, G2).	Valid certificate uncertainty < 2%.		Recertify; new standard.
M		Span-level limit	Chosen so measurements are all ≤ span.	Each run	Use a different cylinder.
M		Mid-level limit	20 to 70% of span-level gas.	Each run	Use a different cylinder.
M		Low-level limit	< 20% of span-level gas	Each run	Use a different cylinder.
S	Data Recorder Design	Data resolution	< 1% of span	Manufacturer design	Replace recorder.
S	Sample Extraction	Probe material	SS or quartz if stack > 500° F.	Each run	Replace material.
M	Sample Extraction	Probe temperature	Heated > 140° C or 25° C greater than the dew point.	Each run	Adjust temperature.

SUMMARY TABLE OF QA/QC—Continued

Status	Process or element	QA/QC specification	Acceptance criteria	Checking frequency	Suggested corrective action
M	Analyzer & Calibration Gas Performance.	Analyzer calibration error.	< 2 percent of the manufacturer certified concentration for the mid- and span-level calibration gases (or 2 percent of span if not subject to an emission standard); for the zero gas less than ±0.25% of span.	Before initial run and after failed sampling system bias test.	Fix problem; retest.
M	System Performance	Sampling system bias	5% of std for high-level and zero gas; where emission std is ≤ 10 ppmv, there is a temporary alternative if the absolute value of the bias is ≤0.50 ppmv.	Before/after each run	Fix problem; retest.
M	System Performance	System response time	Determines minimum sampling time per point.	During initial sampling system bias test.	
M	System Performance	NO_2–NO conversion efficiency.	> 90% of certified value	After every test	Fix problem or replace equipment.
M	System Performance	Minimum sample time	2 times the system response time plus purge time.	Each sample point.	
M	System Performance	Stable sample flow rate (surrogate for maintaining system response time).	< ±5% of required flow	Each run	Adjust flow.
M	Sample Point Selection	Follow Method 1 OR.			
A		Stratification test	< 5% of mean = 1-point < 10% of mean = 3-point	Prior to or during first run.	Relocate or follow Method 1.
A	Multiple Sample Points Simultaneously.	No. of openings in probe	Single or multihole (rake).	Each run	Change the number.
M	Sample Line	Line material & temp (before dryer).	SS ≥140° C, or 25° C greater than the dew point until moisture removed.	Each run	Adjust temperature.
S		Line material & temp(after dryer).	SS or PTFE; no heat req'd after dryer.	Each run.	
S	Calibration Valve	Material	SS	Each run	Replace valve.
S	Sample Pump	Material	Inert to sample constituents.	Verified if sampling system bias test is passed.	Replace pump.
S	Manifolding	Material	Inert to sample constituents.	Verified if bias test is passed.	Replace.
S	Moisture Removal	Equipment type (condenser or permeation dryer).	< ±5% target compound removal.	Verified if bias test is passed.	Replace equipment.
S	Particulate Removal	Inertness of filter	Pass sampling system bias test.	Verified if bias test is passed.	Replace filter.
S		Filter temperature	Maintained > 95 °C.		
M	Data Recording	Frequency	≤ 1 minute average	During run	Remeasure.
M	Data Parameters	Sample concentration range.	All 1-minute averages within analyzer range.	Each run	Note in report.
M	Data Quality Assessment Using Sampling System Bias Data.	Calculate upper and lower uncertainty limits for each *run* using the mean measured data, converter efficiency, and the largest and smallest sampling system bias for that run.	Additional requirement is that the apparent bias must be between ±5% of emission limit equivalent concentration or < 1.5 ppmv. *See* section 12.5 for equations and conditions.	Each Run.	

SUMMARY TABLE OF QA/QC—Continued

Status	Process or element	QA/QC specification	Acceptance criteria	Checking frequency	Suggested corrective action
M–A[3]	Alternative Data Quality Check.	Dynamic spike	>5 1-min avgs. with average 100 ±5% recovery for pretest and 100 ±10% for post-test or ≤0.2 ppmv. See section 12.3 for equation.	Before and after each *test* & in place of pre- and post-*run* sampling system bias tests and interference check.	Redo after correcting problem, retest.
M–A	Data Quality Assessment Using Dynamic spike Recovery data.	Calculate upper and lower uncertainty limits for each *test* using the mean measured data, and converter efficiency and the largest (and smallest) spike recovery.	*See* section 12.6.2 for equations and conditions.	Each *test.*	

[1] S = Suggested.
[2] M = Mandatory.
[3] A = * * *.

10.0 Calibration and Standardization

What Measurement System Calibrations Are Required?

10.1 Initial Analyzer Calibration. You may introduce the calibration gases in any sequence. Make all necessary adjustments to calibrate the gas analyzer and data recorder. If your analyzer measures NO and NO_2 separately, then you must use both NO and NO_2 calibration gases. You may use a non-linear calibration curve to convert your gas analyzer's response to the equivalent gas concentration. However, you must establish the non-linear calibration curve before conducting the analyzer calibration error test. If you use a non-linear calibration curve, you must use it for all sample and calibration measurements. You must also include a copy of the manufacturer's certification of the calibration gases which include the 13 documentation requirements in the EPA Traceability Protocol For Assay and Certification of Gaseous Calibration Standards, September 1997, as amended August 25, 1999 (*http://www.epa.gov/ttn/emc/*) as part of the test report. Then you must pass the analyzer calibration error check. In addition, unless you follow the alternative dynamic spiking option, you must pass the sampling system bias test before you start measurements.

11.0 Analytical Procedures

Because sample collection and analysis are performed together (*see* section 8), additional discussion of the analytical procedure is not necessary.

12.0 Calculations and Data Analysis

12.1 Nomenclature. The terms used in the equations are defined as follows:

B = Sampling system bias.

B_{WS} = Moisture content of sample gas as measured with Method 4 or other approved method, percent/100.

C_{adj} = Pollutant concentration corrected to 15 percent O_2 ppmv.

C_d = Pollutant or diluent concentration adjusted to dry conditions, ppmv or percent.

C_{dir} = Direct calibration concentration (ppmv) of a calibration gas, dry basis, reported by gas analyzer.

C_h = Concentration (ppmv) corresponding to the emission standard (determined in section 12.1.1).

C_s = System calibration concentration (ppmv) of a calibration gas, dry basis, reported by gas analyzer.

C_v = Manufacturer certified concentration (ppmv) of a calibration gas, dry basis.

C_w = Pollutant or diluent concentration measured under moist sample conditions, ppmv, percent, or ng/sm^3 (lb/scf).

$\%CO_2$ = Measured CO_2 concentration measured, dry basis, percent.

$\%CO_{2w}$ = Measured CO_2 concentration measured on a moist sample basis, percent.

DF = Dilution factor of the spike gas; this value shall be ≧10.

E = Mass emission rate of pollutant per gross calorific value of the fuel from Method 19, ng/J (lb/10^6 Btu).

Eff_{NO2} = NO_2 to NO converter efficiency.

F_c = Ratio of the volume of carbon dioxide produced to the gross calorific value of the fuel from Method 19, dsm^3/J (dscf/10^6 Btu).

F_d = Ratio of the volume of dry effluent gas to the gross calorific value of the fuel from Method 19, dsm^3/J (dscf/10^6 Btu).

F_o = Fuel factor based on the ratio of oxygen volume to the ultimate CO_2 volume produced by the fuel at zero percent excess air, dimensionless.

GCV = Gross calorific value of the fuel consistent with the ultimate analysis, kJ/kg (Btu/lb).

K = Conversion factor.

M = Mass of $_{NOx}$.

$\%O_2$ = Measured O_2 concentration dry basis, percent.

$SF_{6(dir)}$ = SF_6 (or tracer gas) concentration measured directly in undiluted spike gas.

$SF_{6(spk)}$ = Diluted SF_6 (or tracer gas) concentration measured in a spiked sample.

$Spike_{dir}$ = Concentration of NO_X in the spike standard measured in direct calibration mode.

X_{CO2} = CO_2 correction factor, percent.

0.209 = Fraction of air that is oxygen, percent/100.

5.9 = 20.9 percent O_2 − 15 percent O_2, the defined O_2 correction value, percent.

12.1.1 Concentration equivalent of the emission standard. *What if my emission standard is not in units of concentration?*

BILLING CODE 6560–250–P

If the process is a combustion process using air	*And the Standard is in these units:*	*Then to get approximate equivalent concentration at stack conditions use the following equation and your best estimate of parameters required*
	ppmv @Y %O2	$C_{equiv} = C_{std}\frac{20.9 - \%O_2}{20.9 - Y}$
	mass/GCV (e.g. lb/million Btu heat input)	$C_{equiv} = \frac{E_{std}}{K*F_d}\frac{20.9 - \%O_2}{20.9}$
	mass per hour	$C_{equiv} = \frac{Emass/hr}{(GCV/hr)(K)F_d}\frac{20.9 - \%O_2}{20.9}$
	mass/unit of electrical output	$C_{equiv} = Eff\frac{Emass/output}{(GCV/hr)(K)F_d}\frac{20.9 - \%O_2}{20.9}$

BILLING CODE 6560–50–C

12.2 Analyzer Calibration Error Test. Use Equation 7E–1 to calculate the analyzer calibration error for each calibration gas.

$$ACE = C_{dir} - C_v \qquad \text{Eq. 7E-1}$$

12.3 Alternative Dynamic Spike Recovery. Use Equation 7E–2 to calculate the alternative dynamic spike recovery.

$$R = \frac{M_{measured} - M_{native}}{M_{added}} \qquad \text{Eq. 7E-2}$$

12.4 Sampling System Bias Check. Use Equation 7E–3 to calculate the sampling system bias for each calibration gas.

$$B = \frac{C_s - C_v}{C_v} \qquad \text{Eq. 7E-3}$$

12.5 NO_2–NO Conversion Efficiency. Use Equation 7E–4 to calculate the NO_2 to NO converter efficiency.

$$Eff_{NO_2} = C_{dir} \div C_v \qquad \text{Eq. 7E-4}$$

12.6 Uncertainty Estimate.

12.6.1 Using the largest (and smallest) bias value obtained in the pre- and/or post-run sampling system bias test, calculate and report an upper and lower uncertainty interval around each run average concentration using Equation 7E–5.

$$U = [1/(1+B)]C_m + [1 - E_{NO_2}]C_{NO_2} \qquad \text{Eq. 7E-5}$$

12.6.2 Using the largest (and smallest) recovery obtained in the pre- and post-test ADSC, calculate and report an upper and lower uncertainty interval around the test average concentration using Equation 7E–6.

$$U = \left[\frac{1}{R}\right]C_m + [1 - E_{NO_2}]C_{NO_2} \qquad \text{Eq. 7E-6}$$

12.7 Miscellaneous calculations.

12.7.1 Moisture Correction. The data you use for most of the calculations must be on a dry basis. Use Equation 7E–7 if any of your measurements need to be corrected to a dry basis.

$$C_d = \frac{C_w}{1 - B_{ws}} \qquad \text{Eq. 7E-7}$$

12.7.2 Using CO_2 as the diluent monitor. You must have an equivalent CO_2 correction factor if pollutant concentrations are to be corrected to 15 percent O_2 and you measure CO_2 concentration in lieu of O2 concentration. Perform the following procedures to calculate the CO_2 correction factor.

12.7.2.1 Using the values obtained from section 12.3.2 of Method 19 and Equation 7E–8, calculate the fuel-specific F_O value for the fuel burned during the test.

$$F_o = 0.209\frac{F_d}{F_c} \qquad \text{Eq. 7E-8}$$

12.7.2.2 Use Equation 7E–9 to calculate the equivalent CO_2 correction factor for correcting measurement data to 15 percent O_2.

$$X_{CO_2} = \frac{20.9-15}{F_o} \qquad \text{Eq. 7E-9}$$

12.7.2.3 Correct the pollutant concentrations to 15 percent O_2 equivalent. Using Equations 7E–10, calculate the NO_X gas concentrations adjusted to 15 percent O_2. The correction to 15 percent O2 is very sensitive to the accuracy of the O_2 or CO_2 concentration measurement. Therefore, oxygen or CO_2 analyzer stability and careful calibration are necessary.

$$C_{adj} = C_d\frac{X_{CO_2}}{\%CO_2} \qquad \text{Eq. 7E-10}$$

12.7.3 Dilution Adjustment of Pollutant Concentration Using O_2 Concentration. Use Equation 7E–11 to calculate the concentration adjusted to 15 percent O_2.

$$C_{adj} = C_d\frac{20.9-15}{20.9-\%O_2} \qquad \text{Eq. 7E-11}$$

12.7.4 Average Adjusted NO_X Concentration. To calculate the average adjusted NO_X concentration, sum the adjusted values for each sample point and divide by the number of points (k) for each run using Equation 7E–12.

$$\overline{C}_{adj} = \sum_1^k\left[\frac{1}{k}\sum_1^k C_{adj}\right] \qquad \text{Eq. 7E-12}$$

12.7.5 NO_X Emission Rate Calculations. Calculate the emission rates for NO_X in units of pollutant mass per quantity of heat input using the pollutant and diluent concentrations and fuel-specific F-factors based on the fuel combustion characteristics. You must convert the measured concentrations of pollutant from parts per million by volume (ppmv) to mass per unit volume. *See* Table 7E–2 for conversion factors.

TABLE 7E–2.—CONVERSION FACTORS FOR CONCENTRATION

From	To	Multiply by conversion factor (CV)
g/sm³	ng/sm³	10^9
mg/sm³	ng/sm³	10^6
lb/scf	ng/sm³	1.602×10^{13}
ppmv (NO_X)	ng/sm³	1.912×10^6
ppmv (NO_X)	lb/scf	1.194×10^{-7}

12.7.5.1 Calculation of Emission Rate Using Oxygen Correction. The O_2 concentration and pollutant concentration must be on a dry basis. Use Equation 7E–13 to calculate the pollutant emission rate in units of mass NO_X per unit of heat input.

$$E = C_dF_d\frac{20.9}{20.9-\%O_2} \qquad \text{Eq. 7E-13}$$

12.7.5.2 Calculation of Emission Rate Using Carbon Dioxide Correction. The CO_2 concentration and the pollutant concentration may be on either a wet basis or a dry basis. Both concentrations must be on the same basis for the calculations. Use Equation 7E–14 or 7E–15 to calculate the pollutant emission rate in units of mass NO_X per unit of heat input.

$$E = C_dF_c\frac{100}{\%CO_2} \qquad \text{Eq. 7E-14}$$

$$E = C_wF_c\frac{100}{\%CO_{2w}} \qquad \text{Eq. 7E-15}$$

12.7.5.3 Calculation of mass emission rate using fuel usage rate and F-Factors. Use Equation 7E–16

$$\text{Emass} = E(GCV)(Qfuel) \qquad \text{Eq. 7E-16}$$

13.0 Method Performance

13.1 Analytical Range. Your span-level calibration gas sets the upper limit of your instrument's calibration. Choose the span-level calibration gas that would result in the sampled gases being on-scale and averaging 20–100 percent of the span. If at any time during a run a measured 1-minute average gas concentration exceeds the span, you must at a minimum identify and report these minutes as deviations of the method. Depending on the data quality objectives of the sampling program, this event may require additional corrective action before proceeding with the test program. *See* section 1.3.1 for discussion.

13.2 Sensitivity. *See* discussion in section 1.3.1.

13.3 System Response and Minimum Sampling Times. The system response time determines the minimum sampling time at each sampling point. There is no minimum system response time specified, however the minimum sampling time per sample point is 2 times the system response time plus purge time. For example, if you use a sampling system with a 2 minute system response time, this means that in addition to purging the system for at least 4 minutes, you must record a minimum of 4 one-minute averages at each sample point.

13.4 Analyzer Calibration Error. The difference between the direct calibration response and the manufacturer certified concentration must be less than ±2 percent of the manufacturer certified concentration for the low-, mid- and span-level calibration gases and ±0.25 percent of analyzer upper range limit for the zero gas.

13.5 Sampling System Bias. The pre- and post-run sampling system bias must be within ±5 percent of the concentration equivalent of the emission standard (or ±5 percent of span if not subject to an emission standard) for the low- and span-level (or mid-level, as applicable) calibration gases. However, for test facilities with emission standards equivalent to 10.0 ppmv or less, if the absolute value of the bias is less than or equal to 0.50 ppmv, then the requirements of the sampling system bias test are satisfied. This provision for low-standard facilities is valid only for tests completed within 3 years of the effective date of this amendment's promulgation.

13.6 Interference Check. The interference response must not be greater than 2.5 percent of the analyzer upper range limit.

13.7 NO2 to NO Conversion Efficiency Test (as applicable). The conversion efficiency must be greater than 90 percent of the certified value of the test gas.

13.8 Alternative Dynamic Spike Check (ADSC). If your analyzer has been certified through the manufacturer's stability test, you may substitute a pre- and post-test ADSC for the interference check and pre- and post-run sampling system bias checks. Recoveries of both pre-test spikes must be within 100 ±5 percent . Recoveries of both the post-test ADSC spikes must be within 100 ±10 percent. If the absolute difference between the calculated spike value (CS) and measured spike value (Cm) is equal to or less than 0.20 ppmv, then the requirements of the ADSC are met. This provision for low-standard facilities is valid only for tests completed within 3 years of the effective date of this amendment's promulgation.

14.0 Pollution Prevention [Reserved]

15.0 Waste Management [Reserved]

16.0 Alternative Procedures

16.1 Dynamic Spiking Procedure. You may choose to validate your test data with this alternative dynamic spiking procedure. You must meet the following requirements to use this option.

16.1.1 You must certify that you followed a written procedure and have demonstrated ability, within the last calender year, to operate the spiking system following that written procedure in either a simulated or actual application. Demonstrated ability means that you have operated the spiking system at a target concentration equal to or less than the target concentration for this test and obtained a data set of 30 1-minute averages with a mass recovery of 100 ±5 percent of the mass of NO_X spiked with a relative standard deviation of those 30 1-minute averages equal or less than 5 percent.

16.1.2 Spiking procedure requirements. You must follow the written procedure that you have demonstrated your ability to perform. The volume of the spike gas added must be less than 10 percent of the total volume. The dynamic spiking procedure must be done before the first run and repeated after the last run of the test program. However, the pre-test requirement is waived if you provide a valid certification that the analyzer has been shown to meet the manufacturer's stability test in section 16.2 below. Both the pre- and post-test must consist of 2 target levels. One level must add between 1 and 2 time the native mass and the other level must add between 5 and 1 times the native stack NO_X mass in the sample stream. The spikes must be prepared from a gas certified by the traceability protocol (G1 or G2) to contain NO_X of known concentration with an uncertainty equal to or

less than 2 percent. The minimum number of datum to represent each target concentration are 5; we strongly suggest more since you must calculate and report an uncertainty range around the measured concentration based on these recoveries. If the recovery is outside 100 ±10 percent, then the reason for the bias should be determined and reported. As a condition of your using this option, you must document and confirm that during the entire test you operated within the ambient temperature and pressure and voltage ranges certified by the manufacturer. You must also list all manufacturer fault and alarm codes and identify any that were activated during the test.

16.1.3 Example spiking procedure using a tracer gas. Introduce the spike/tracer gas at a constant flow rate of 10 percent of the total sample flow. (**Note:** Use the rotameter at the end of the sampling train to estimate the required spike/tracer gas flow rate.) Use a mass flow meter (±2 percent), to monitor the spike flow rate. Record the spike flow rate every 1 minute. Wait for at least 2 times the response time T, then record at least 5 successive 1 minute averages of the spiked sample gas. The spiked concentration shall be within 5 percent of the mean of the 5 measurements. Calculate the dilution factor using the tracer gas as follows:

$$DF = \frac{SF_{6\,(direct)}}{SF_{6\,(spike)}} \qquad \text{Eq. 7E-17}$$

$$CS = \frac{Spike_{dir}}{DF} \qquad \text{Eq. 7E-18}$$

16.2 Manufacturer's Stability Test. Subject each analyzer model to a range of potential effects to demonstrate its stability following the procedures provided in 40 CFR 53.23, 53.55, and 53.56 and provide the information in a summary format. A copy of this information must be included in each test report.

16.3 Annual Primary Interference Gas Recheck. Perform an interference gas check using the 4 primary interference gases identified in the manufacturer's stability test on an annual basis, when indicated as corrective action by an alarm or fault and, whenever major component repairs are required. Record the responses. For each of the 4 primary interference gases, the 95 percent confidence interval determined in the manufacturer stability test must include the abbreviated interference gas check value prior to returning the analyzer to service.

17.0 References

1. ''EPA Traceability Protocol for Assay and Certification of Gaseous Calibration Standards' September 1997 as amended, EPA–600/R–97/121.

18.0 Tables, Diagrams, Flowcharts, and Validation Data

BILLING CODE 6560–50–P

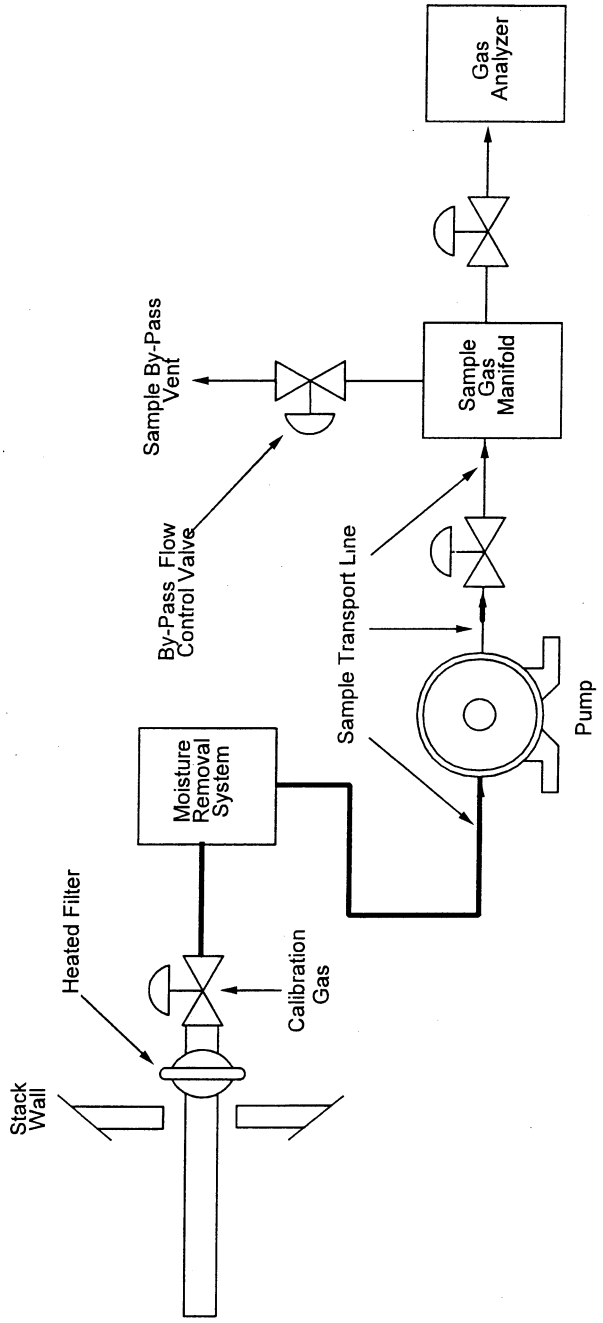

Figure 7E-1. Measurement System.

Figure 7E-2. Testing Flow Chart

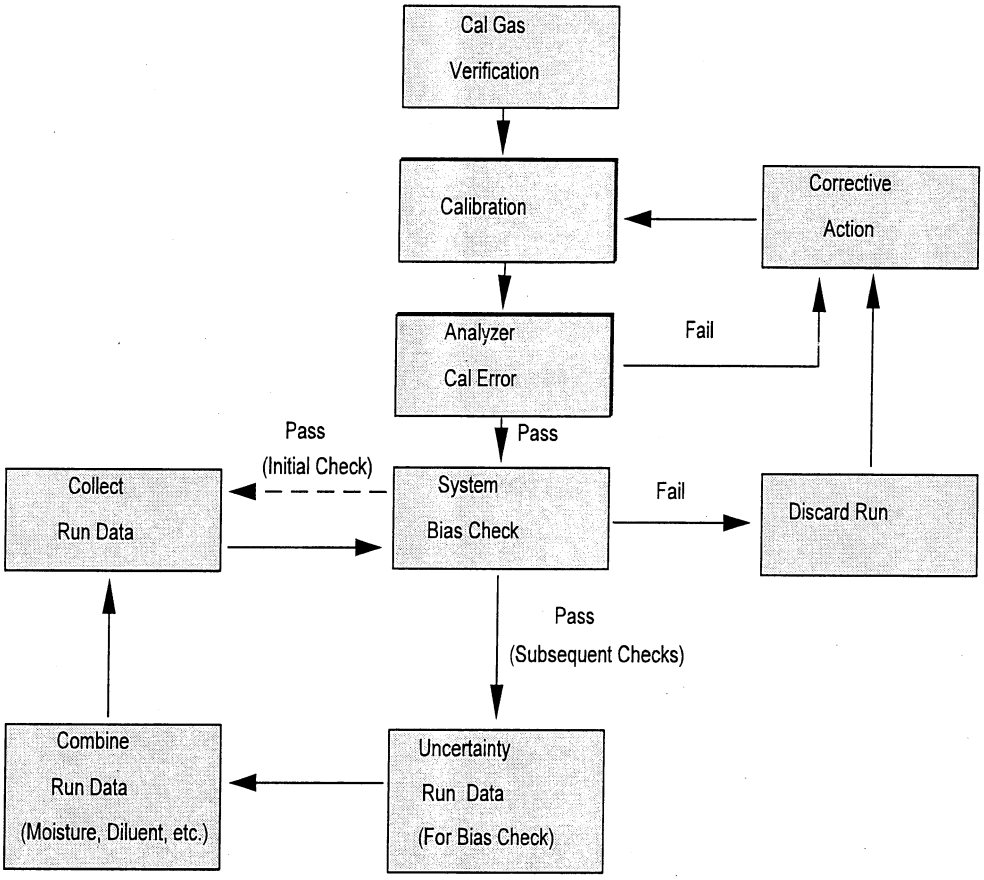

BILLING CODE 6560–50–C

TABLE 7E–1.—ANALYZER CALIBRATION ERROR DATA

Source identification: _____
Test personnel: _____
Date: _____ Time: _____

Analyzer calibration error data for sampling runs: _____
Analyzer model No. _____ Serial No. _____

	Manufacturer certified cylinder value (indicate units)	Analyzer calibration response (indicate units)	Absolute difference (indicate units)	Percent difference
	A	B	|A–B|	[|A–B|]*100
Low calibration gas				
Mid-level caliberation gas				
Span-level calibration gas				

TABLE 7E–2.—SAMPLING SYSTEM BIAS CHECK DATA

Source identification: _____ Run number: _____
Test personnel: _____ Emission std: _____ Concentration equivalent: _____
Date: _____ Response time: _____
Analyzer model No. _____ Serial No. _____

	Calibration gas value (ppmv)	Initial values		Final values	
		System response (ppmv)	System bias (percent of emission std. equivalent)	System response (ppmv)	System bias (percent of emission std. equivalent)
Low-level gas					
Span- (or mid-) level gas					

BILLING CODE 6560–50–P

Table 7E-3. Interference Check

Potential Interferent Gas	Sample Conditioning Type			
		Hot Wet	Dried	Diluted
		Interferent Target Concentration		
CO2		5 and 15%	5 and 15%	Note 1
H2O		25%	1 %	
NO		15 ppmv	15 ppmv	
NO2		15 ppmv	15 ppmv	
N2O		10 ppmv	10 ppmv	
CO		50 ppmv	50 ppmv	
NH3		10 ppmv	10 ppmv	
CH4		50 ppmv	50 ppmv	
SO2		20 ppmv	20 ppmv	
H2		50 ppmv	50 ppmv	
HCl		10 ppmv	10 ppmv	
Total Interference	± 2.5 % of upper range limit or ± 0.5 ppmv for 0-20 ppmv range, or ± 0.2 ppmv for 0-5 range			

Notes: 1) Use the Hot Wet concentrations divided by the minimum dilution ratio specified for the system.

2) Any of the above specific gases can be eliminated or tested at a lower level if the manufacturer has provided reliable means for limiting or scrubbing that gas to a specified level.

Table 7E-4 - Interference Response

Date of Test _____
Analyzer Type _____
Model No. _____
Serial No. _____

Test Gas Type	Concentration (ppm)	Analyzer Output Response	Difference
		Total Difference	
		% of Range Limit	
		2.5 % of Upper Range	

BILLING CODE 6560–50–C

TABLE 7E–5.—MANUFACTURER STABILITY TEST

Test description	Analyzer model test frequency			Acceptance criteria
	Annual (or 1st quarter)	Quarterly or not to exceed 50 production units	Each analyzer	
Thermal Stability	X			Temperature range when drift does not exceed 3% of analyzer range over a 2-hour run when measured with NO_X present @ ≥80% of range.
Fault Conditions	X			Note 1.
Alarm Conditions	X			Note 2.
Interference Gas Test	X	X		1. $I_{(annual)}$ ≤2.5% of range. 2. $I_{(quarterly)} \leq I_{(annual)}$.
Insensitivity to Supply Voltage Variations.	X	X		1. Both ±10% of nominal voltage (or the manufacturer specified range) must produce no more than 2% of range drift at either 0 or with No_X present >80% of range. 2. $Drift_{(quarterly)} \leq Drift_{(annual)}$.
Analyzer Calibration Error	X	X	X	For a low, medium, and span gas, the difference between manufacturer certified value and analyzer response in direct calibration mode, no more than 2% of manufacturer certified value.
Analyzer Response Time	X	X	X	$RT_{(individual)}$ & $RT_{(quarterly)} \leq RT_{(annual)}$.
Intrinsic Source Gas Analyzer Settings/Adjustments.	X	X		1. Identify (annually). 2. $Settings_{(quart)} \leq setting_{(annual)}$.
Primary 4 Interference Gas Test		X	X	1. $I_{(annual4)} \leq 2.5\%$ of range. 2. Each analyzer measured response must be ≤ the response obtained from the annual analyzer test for each of the 4 gases.

Note 1: Identify conditions which, when they occur, are deemed by the manufacturer to result in performance which is not in compliance with this performance specification. These are to be indicated both audibly or visually and electrically. The annual test must document that these indicators correlate with the intended fault condition.

Note 2: Identify conditions which, when they occur, the manufacturer recommends review and/or corrective action by trained service personnel to prevent further deterioration of analyzer performance that could result in performance which is not in compliance with this performance specification. These are to be indicated both audibly or visually and electrically. The annual test must document that these alarms correlate with the intended alarm condition.

* * * * *

Method 10—Determination of Carbon Monoxide Emissions From Stationary Sources (Instrumental Analyzer Procedure)

1.0 Scope and Application

What Is Method 10?

Method 10 is a procedure for measuring carbon monoxide (CO) in stationary source emissions using a continuous instrumental analyzer. Quality assurance and quality control requirements are included to assure that you, the tester, collect data of known quality. You must document your adherence to these specific requirements for equipment, supplies, sample collection and analysis, calculations, and data analysis. This method does not completely describe all equipment, supplies, and sampling and analytical procedures you will need but refers to other methods for some of the details. Therefore, to obtain reliable results, you should also have a thorough knowledge of these additional test methods:

(a) Method 1—Sample and Velocity Traverses for Stationary Sources.

(b) Method 4—Determination of Moisture Content in Stack Gases.

(c) Method 7E—Determination of Nitrogen Oxides Emissions From Stationary Sources (Instrumental Analyzer Procedure).

All methods in this list appear in 40 CFR part 60, appendix A.

1.1 Analytes. *What does this method determine?*

Analyte	CAS No.	Sensitivity
CO	630–08–0	*See* discussion in section 1.3.

1.2 Applicability. *When is this method required?* Method 10 is required in specific New Source Performance Standards and State Implementation Plans and permits where measuring CO concentrations in stationary source emissions is required. Other regulations may also require its use.

1.3 Data Quality Objectives. Refer to section 1.3 of Method 7E.

2.0 Summary of Method

In this method, you continuously or intermittently sample the emission gas and convey the sample to a nondispersive infrared analyzer (NDIR) that measures the concentration of CO. You must adhere to the performance requirements of this method to validate your data.

3.0 Definitions

3.1 The Analyzer Calibration Error, Calibration Curve, Direct Calibration, System Calibration, Calibration Gas, Data Recorder, Gas Analyzer, Interference Check, Measurement System, Range, Response Time, Sampling System Bias, and Span are the same as in sections 3.0 of Method 7E.

4.0 Interferences

Any substance having a strong absorption of infrared energy will interfere to some extent. The following table gives examples. The table shows how the interference ratio can be higher when the measuring device has a low range (0–100 ppm). You can eliminate major interference problems by using silica gel and ascarite traps. If you use ascarite traps, correct the measured gas volume for the CO_2 removed in the trap. Instrument correction is also an acceptable means of compensating for interference.

Device range (ppm)	Interference ratio
1500–3000	3.5% H_20 per 7 ppm CO.
1500–3000	10% CO_2 per 10 ppm CO.
0–100	3.5% H_2O per 25 ppm CO.

Device range (ppm)	Interference ratio
0–100	10% CO_2 per 50 ppm CO.

5.0 Safety

Refer to section 5.0 of Method 7E.

6.0 Equipment and Supplies

Figures 10–1, 10–2, and 10–3 are schematic diagrams of acceptable continuous and integrated measurement systems and the analytical system. You must use a measurement system for CO that meets the following specifications for the essential components.

6.1 *What do I need for the measurement system?* Sample Probe, Particulalte Filter, Heated Sample Line, Sample Lines, Moisture Removal System, Sample Pump, Flow Control/Gas Manifold, Sample Gas Manifold, and Data Recorder. You must follow the noted specifications in section 6.1 of Method 7E.

6.2 CO Analyzer. An instrument that uses nondispersive infrared detection principal to continuously measure CO in the gas stream and meets the specifications in section 13.0. The dual-range analyzer provisions of section 6.1.8.1 of Method 7E apply.

7.0 Reagents and Standards

7.1 Calibration Gas. *What calibration gases do I need?* Refer to section 7.1 of Method 7E for the calibration gas requirements.

7.2 Interference Check. *What additional reagents do I need for the interference check?* Use the test gases listed in Table 7E–5 of Method 7E to conduct the interference check. Conduct the interference check by sequentially introducing the gases listed in Table 7E–5 (one at a time) both with and without CO into the calibrated analyzer and recording the apparent concentrations after waiting at least 3 times the analyzer response time. This is then repeated with a blend containing a known CO concentration greater than 80 percent of the analyzer's range and calculating the difference between the known value and the apparent concentration. For each potential interferent gas, identify the largest of the 2 absolute values as the potential interference. The interference for all potential interferent gases in the source category must be less than 2.5 percent of the range to be acceptable. Record the data on a form similar to Figure 7E–8.

8.0 Sample Collection, Preservation, Storage, and Transport

Emission Test Procedure

8.1 Sampling Site and Sampling Points. You must follow section 8.1 of Method 7E.

8.2 Measurement System Performance Tests. You must follow the Calibration Gas Verification, Measurement System Preparation, Analyzer Calibration Error Test, Initial Sampling System Bias Check, Measurement System Response Time, and Interference Check procedures in sections 8.2 and 8.3 of Method 7E.

8.3 Sample Collection. Follow section 8.1. Sample within 5 percent of the rate you used during the sampling system bias check.

8.4 Post-Run Sampling System Bias Check and Alternative Dynamic Spike Procedure. Follow sections 8.5 and 8.6 of Method 7E.

9.0 Quality Control

Follow quality control procedures in section 9.0 of Method 7E.

10.0 Calibration and Standardization

Follow the procedures for calibration and standardization in section 10.0 of Method 7E.

11.0 Analytical Procedures

Because sample collection and analysis are performed together (*see* section 8), additional discussion of the analytical procedure is not necessary.

12.0 Calculations and Data Analysis

You must follow the procedures for calculations and data analysis in section 12.0 of Method 7E, as applicable.

13.0 Method Performance

13.1 The Analytical Range, Sensitivity, System Response and Minimum Sampling Times, Analyzer Calibration Error, Sampling System Bias, Interference Test and Alternative Dynamic Spike Check specifications are the same as in section 13.0 of Method 7E.

14.0 Pollution Prevention [Reserved]

15.0 Waste Management [Reserved]

16.0 Alternative Procedures

16.1 Alternative Interference Check.

16.2 Dynamic Spiking Procedure, Manufacturer's Stability Test and Annual Primary Interference Recheck (as applicable). These procedures are the same as in section 16 of Method 7E.

17.0 References

1. ''EPA Traceability Protocol for Assay and Certification of Gaseous Calibration Standards'' September 1997 as amended, EPA–600/R–97/121.

18.0 Tables, Diagrams, Flowcharts, and Validation Data

TABLE 10–1.—FIELD DATA

Location:		Date:
Test:		Operator:
Clock Time	Rotameter Reading liters/min (cfm)	Comments

BILLING CODE 6560–50–P

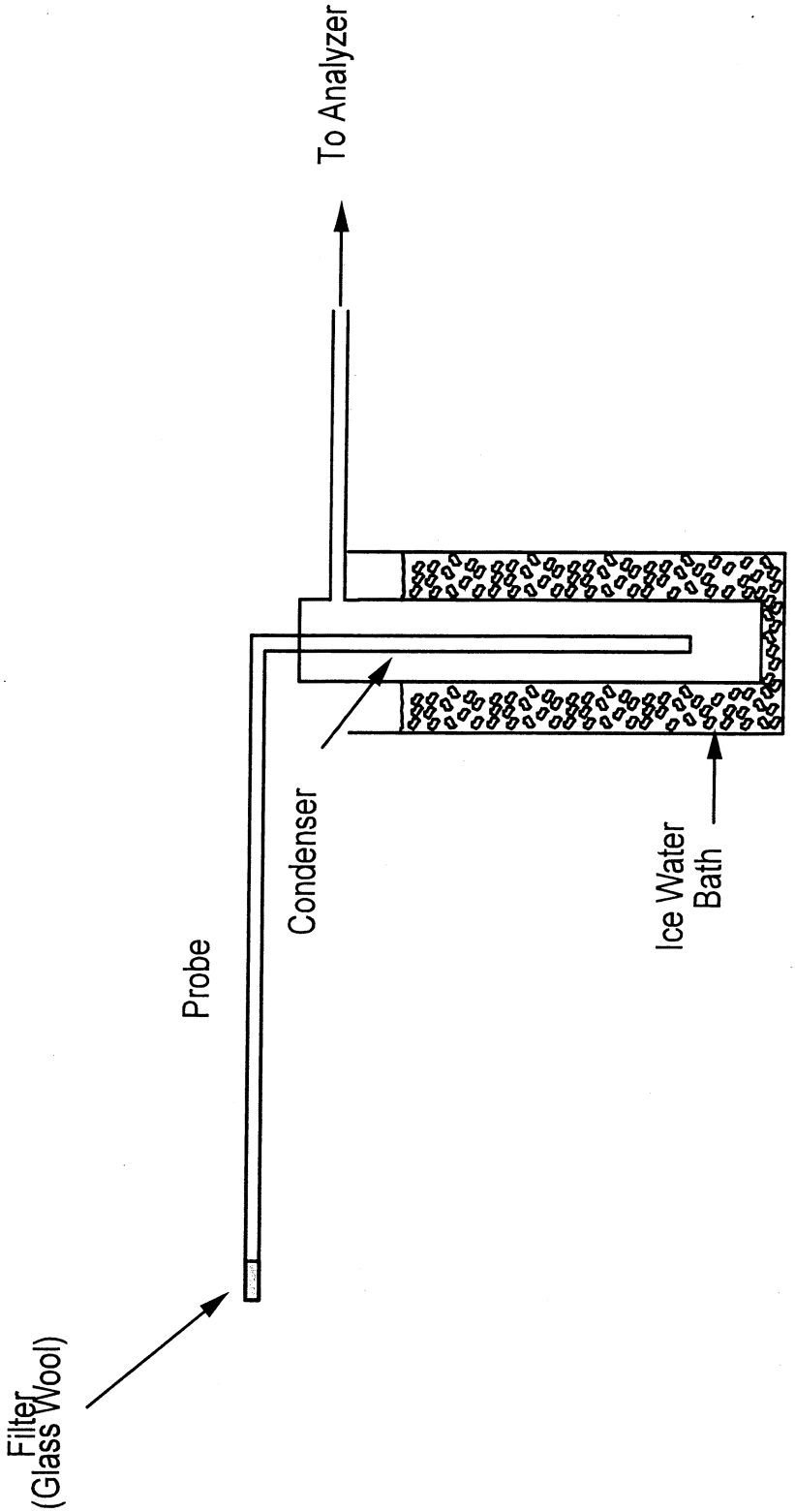

Figure 10-1. Continuous Sampling Train.

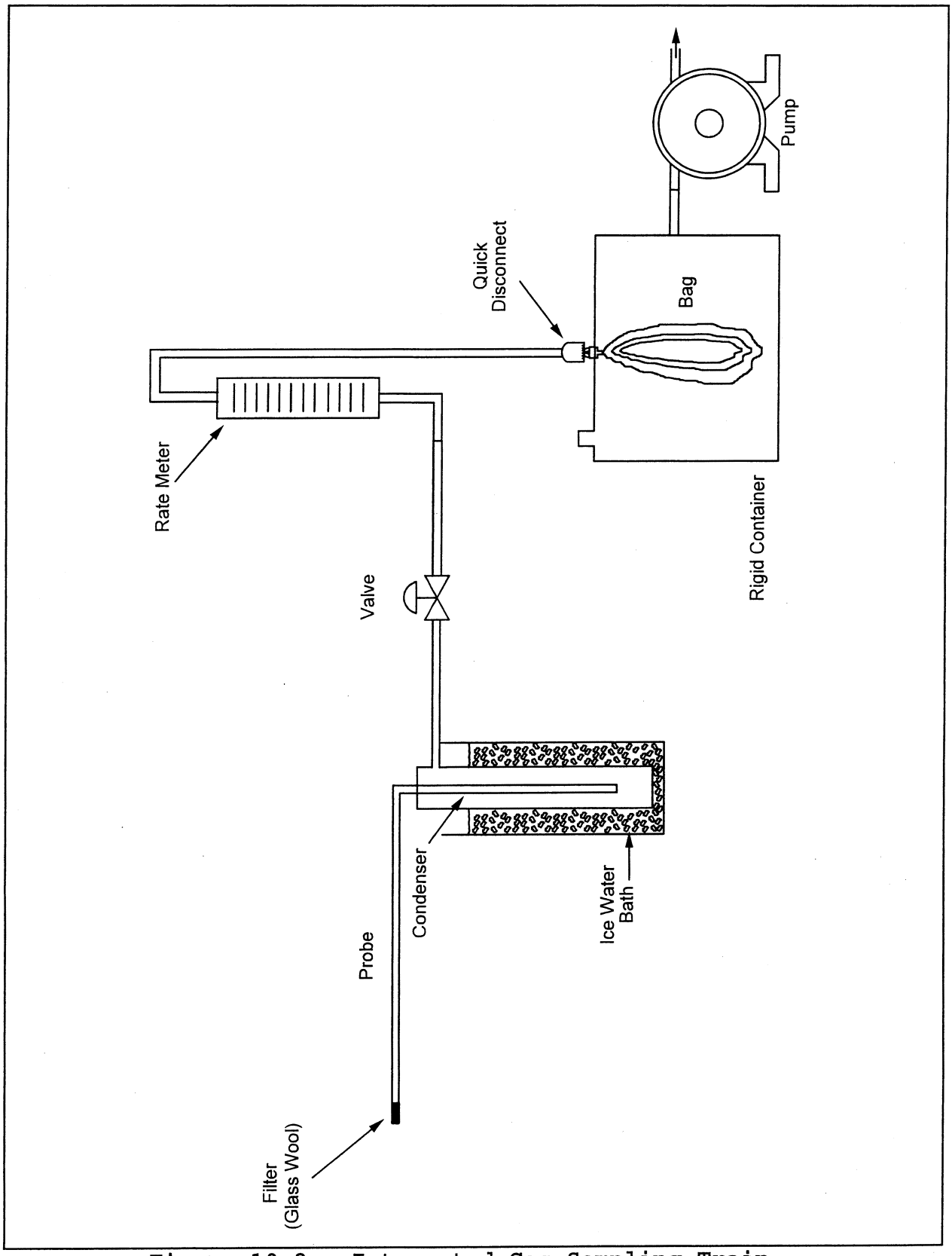

Figure 10-2. Integrated Gas Sampling Train.

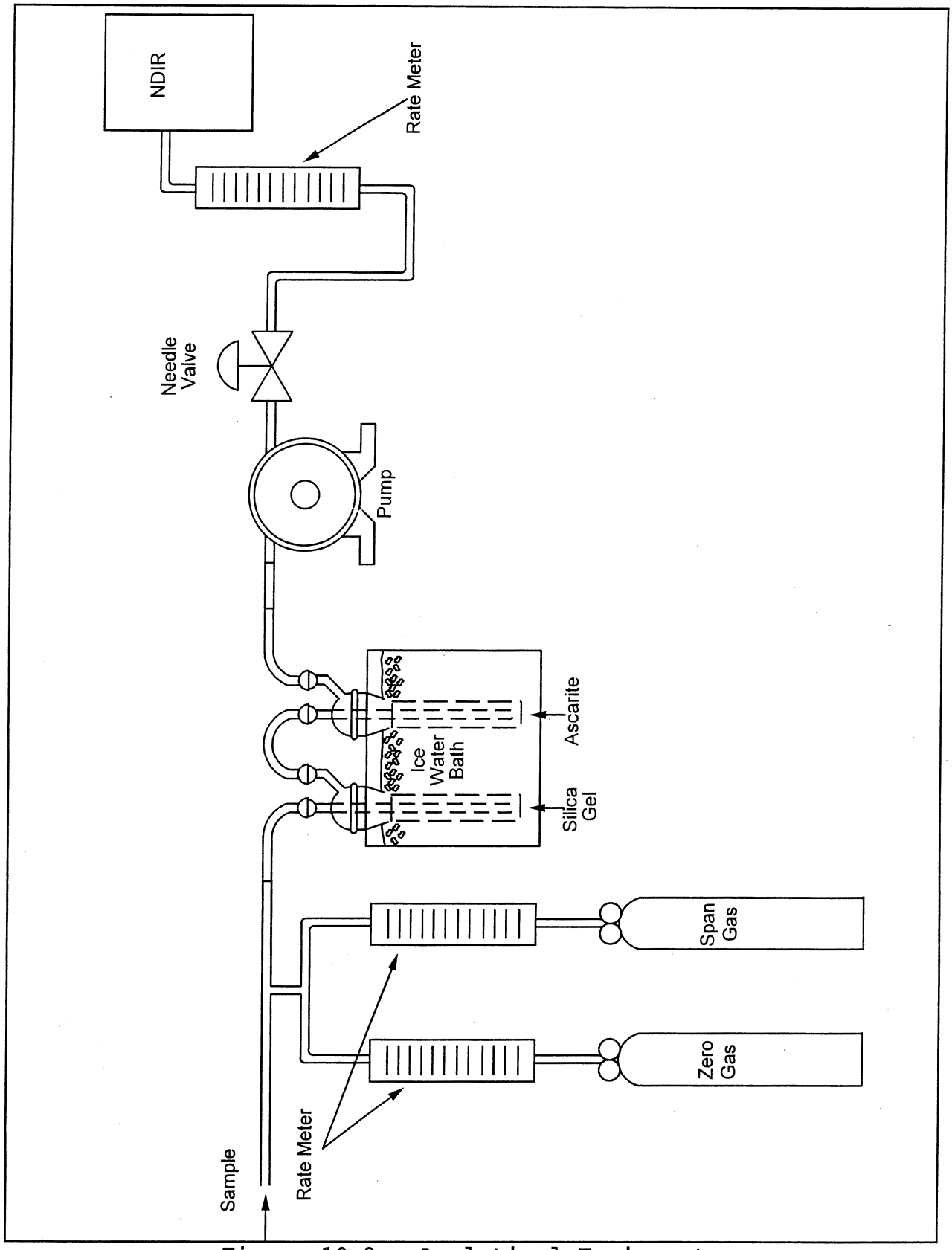

Figure 10-3. Analytical Equipment.

BILLING CODE 6560–50–C

* * * * *

Method 20—Determination of Nitrogen Oxides and Sulfur Dioxide Emissions From Stationary Gas Turbines

1.0 Scope and Application

What Is Method 20?

Method 20 contains the details you must follow when using an instrumental analyzer to determine concentrations of nitrogen oxides, oxygen, and sulfur dioxide in the emissions from stationary gas turbines. This method refers to other methods for specific instructions for equipment and performance requirements, supplies, sample collection and analysis, calculations, and data analysis. All methods that are referenced are in appendix A of 40 CFR part 60.

1.1 Analytes. *What does this method determine?*

Analyte	CAS No.	Sensitivity
Nitrogen oxides (NO_X) as nitrogen dioxide		*See* section 1.3 of Method 7E.
Nitric oxide (NO)	10102–43–9	
Nitrogen dioxide (NO_2)	10102–44–0	
Diluent oxygen (O_2) or carbon dioxide (CO_2)		*See* section 1.3 of Method 3A.
Sulfur dioxide (SO_2)	7446–09–5	*See* section 1.3 of Method 6C.

1.2 Applicability. *When is this method required?* Method 6C is required in specific New Source Performance Standards, Clean Air Marketing rules, and State Implementation Plans and permits where measuring SO_2 concentrations in stationary source emissions is required. Other regulations may also require its use.

1.3 Data Quality Objectives. Refer to section 1.3 of Method 7E.

2.0 Summary of Method

In this method, NO_X, O_2 (or CO_2), and SO_2 are measured using the following methods:

Method 1—Sample and Velocity Traverses for Stationary Sources.

(a) Method 7E—Determination of Nitrogen Oxides Emissions From Stationary Sources (Instrumental Analyzer Procedure).

(b) Method 3A—Determination of Oxygen and Carbon Dioxide Emissions From Stationary Sources (Instrumental Analyzer Procedure).

(c) Method 6C—Determination of Sulfur Dioxide Emissions From Stationary Sources (Instrumental Analyzer Procedure).

3.0 Definitions

Refer to section 3.0 of Method 7E.

4.0 Interferences [Reserved]

5.0 Safety

Refer to section 5.0 of Method 7E.

6.0 Equipment and Supplies

The measurement system design is shown in Figure 20–1. Refer to the appropriate methods listed in section 2.0 for equipment and supplies.

7.0 Reagents and Standards

Refer to the appropriate methods listed in section 2.0 for reagents and standards.

8.0 Sample Collection, Preservation, Storage, and Transport

Emission Test Procedure

8.1 Sampling Site and Sampling Points. You must follow section 8.1 of Method 7E.

8.2 Measurement System Performance Tests. You must follow the Calibration Gas Verification, Measurement System Preparation, Analyzer Calibration Error Test, NO_2 to NO Conversion Efficiency Test (as applicable), Initial Sampling System Bias Check, System Response Time.

8.3 Sample Collection. Follow section 8.4 of Method 7E.

8.4 Post-Run Sampling System Bias Check and Alternative Dynamic Spike Procedure. Follow sections 8.5 and 8.6 of Method 7E.

9.0 Quality Control

Follow quality control procedures in section 9.0 of Method 7E.

10.0 Calibration and Standardization

Follow the procedures for calibration and standardization in section 10.0 of Method 7E.

11.0 Analytical Procedures

Because sample collection and analysis are performed together (*see* section 8), additional discussion of the analytical procedure is not necessary.

12.0 Calculations and Data Analysis

You must follow the procedures for calculations and data analysis in section 12.0 of the appropriate method listed in section 2.0.

13.0 Method Performance

13.1 The Analytical Range, Sensitivity, System Response and Minimum Sampling Times, Analyzer Calibration Error, Sampling System Bias, NO_2 to NO Conversion Efficiency Test (as applicable), Interference Check, and Alternative Dynamic Spike Check specifications are the same as in section 13.0 of Method 7E.

14.0 Pollution Prevention [Reserved]

15.0 Waste Management [Reserved]

16.0 Alternative Procedures

Refer to section 16.0 of the appropriate method listed in section 2.0 for alternative procedures.

17.0 References

Refer to section 17.0 of the appropriate method listed in section 2.0 for references.

18.0 Tables, Diagrams, Flowcharts, and Validation Data

In addition to Figure 20–1, refer to section 18.0 of the appropriate method listed in section 2.0 for tables, diagrams, flowcharts, and validation data.

BILLING CODE 6560–50–P

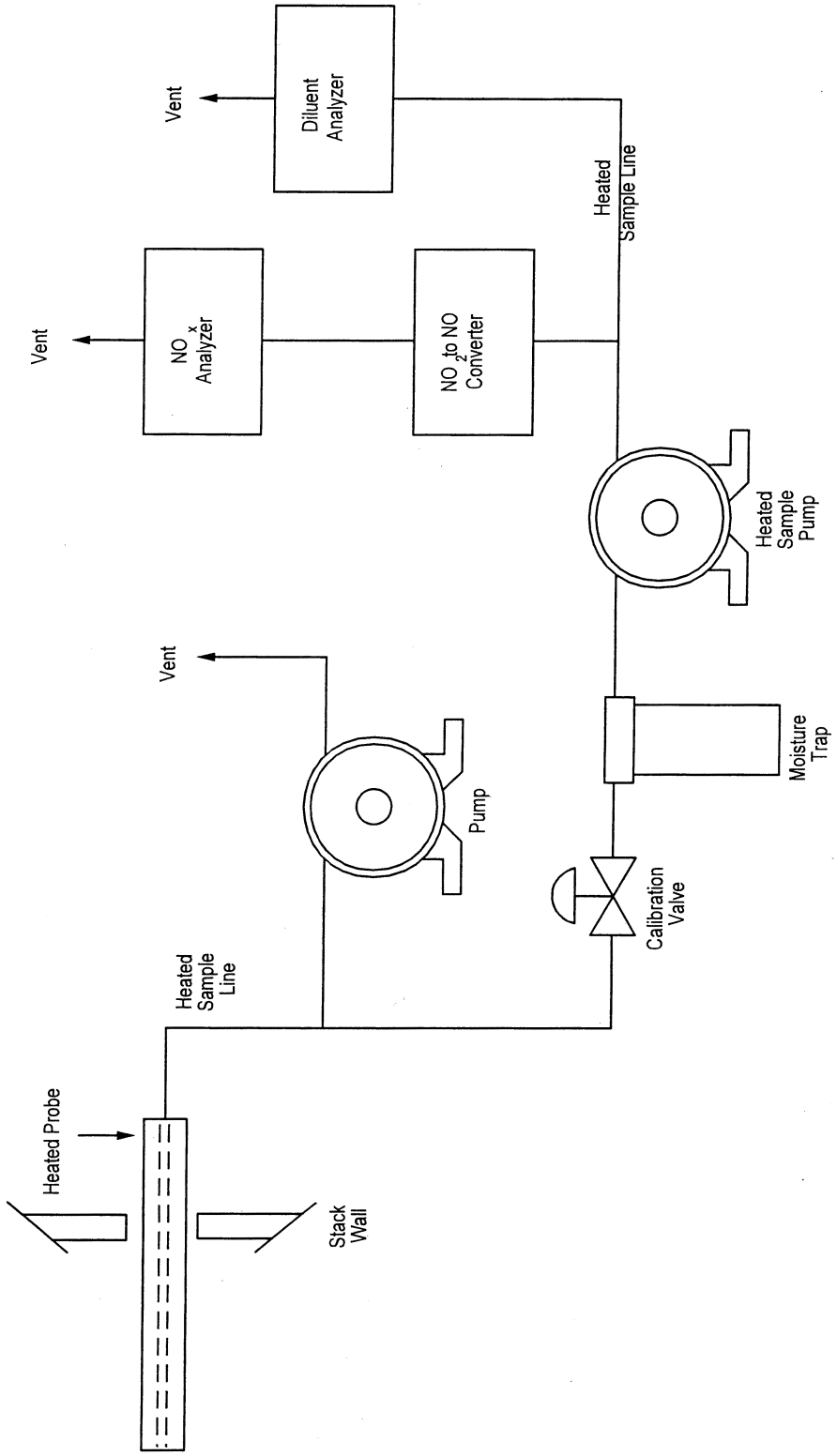

Figure 20-1. Measurement System Design.

* * * * *

[FR Doc. 03–24909 Filed 10–9–03; 8:45 am]
BILLING CODE 6560–50–C