AUTHENTICATED U.S. GOVERNMENT INFORMATION GPO

# Federal Register

12–01–03 Monday
Vol. 68 No. 230 Dec. 1, 2003

Pages 67013–67356

The **FEDERAL REGISTER** (ISSN 0097–6326) is published daily, Monday through Friday, except official holidays, by the Office of the Federal Register, National Archives and Records Administration, Washington, DC 20408, under the Federal Register Act (44 U.S.C. Ch. 15) and the regulations of the Administrative Committee of the Federal Register (1 CFR Ch. I). The Superintendent of Documents, U.S. Government Printing Office, Washington, DC 20402 is the exclusive distributor of the official edition. Periodicals postage is paid at Washington, DC.

The **FEDERAL REGISTER** provides a uniform system for making available to the public regulations and legal notices issued by Federal agencies. These include Presidential proclamations and Executive Orders, Federal agency documents having general applicability and legal effect, documents required to be published by act of Congress, and other Federal agency documents of public interest.

Documents are on file for public inspection in the Office of the Federal Register the day before they are published, unless the issuing agency requests earlier filing. For a list of documents currently on file for public inspection, see *http://www.nara.gov/fedreg.*

**The seal of the National Archives and Records Administration authenticates the Federal Register** as the official serial publication established under the Federal Register Act. Under 44 U.S.C. 1507, the contents of the **Federal Register** shall be judicially noticed.

The **Federal Register** is published in paper and on 24x microfiche. It is also available online at no charge as one of the databases on GPO Access, a service of the U.S. Government Printing Office.

The online edition of the **Federal Register** *www.access.gpo.gov/nara,* available through GPO Access, is issued under the authority of the Administrative Committee of the Federal Register as the official legal equivalent of the paper and microfiche editions (44 U.S.C. 4101 and 1 CFR 5.10). It is updated by 6 a.m. each day the **Federal Register** is published and includes both text and graphics from Volume 59, Number 1 (January 2, 1994) forward.

For more information about GPO Access, contact the GPO Access User Support Team, call toll free 1-888-293-6498; DC area 202-512-1530; fax at 202-512-1262; or via email at *gpoaccess@gpo.gov.* The Support Team is available between 7:00 a.m. and 9:00 p.m. Eastern Time, Monday–Friday, except official holidays.

The annual subscription price for the **Federal Register** paper edition is $699, or $764 for a combined **Federal Register, Federal Register** Index and List of CFR Sections Affected (LSA) subscription; the microfiche edition of the **Federal Register** including the **Federal Register** Index and LSA is $264. Six month subscriptions are available for one-half the annual rate. The charge for individual copies in paper form is $10.00 for each issue, or $10.00 for each group of pages as actually bound; or $2.00 for each issue in microfiche form. All prices include regular domestic postage and handling. International customers please add 40% for foreign handling. Remit check or money order, made payable to the Superintendent of Documents, or charge to your GPO Deposit Account, VISA, MasterCard, American Express, or Discover. Mail to: New Orders, Superintendent of Documents, P.O. Box 371954, Pittsburgh, PA 15250-7954; or call toll free 1-866-512-1800, DC area 202-512-1800; or go to the U.S. Government Online Bookstore site, *bookstore@gpo.gov.*

There are no restrictions on the republication of material appearing in the **Federal Register.**

**How To Cite This Publication:** Use the volume number and the page number. Example: 68 FR 12345.

**Postmaster:** Send address changes to the Superintendent of Documents, Federal Register, U.S. Government Printing Office, Washington DC 20402, along with the entire mailing label from the last issue received.

## SUBSCRIPTIONS AND COPIES

| | |
|---|---|
| **PUBLIC** | |
| **Subscriptions:** | |
| Paper or fiche | **202–512–1800** |
| Assistance with public subscriptions | **202–512–1806** |
| **General online information** | **202–512–1530; 1–888–293–6498** |
| **Single copies/back copies:** | |
| Paper or fiche | **202–512–1800** |
| Assistance with public single copies | **1–866–512–1800 (Toll-Free)** |
| **FEDERAL AGENCIES** | |
| **Subscriptions:** | |
| Paper or fiche | **202–741–6005** |
| Assistance with Federal agency subscriptions | **202–741–6005** |

**What's NEW!**

**Federal Register** Table of Contents via e-mail

Subscribe to FEDREGTOC, to receive the **Federal Register** Table of Contents in your e-mail every day.

If you get the HTML version, you can click directly to any document in the issue.

To subscribe, go to **http://listserv.access.gpo.gov** and select:

*Online mailing list archives*
*FEDREGTOC-L*
*Join or leave the list*

Then follow the instructions.

Printed on recycled paper.

# Contents

**Federal Register**

Vol. 68, No. 230

Monday, December 1, 2003

**Agriculture Department**
*See* Commodity Credit Corporation
*See* Cooperative State Research, Education, and Extension Service
*See* Forest Service
*See* Grain Inspection, Packers and Stockyards Administration
*See* Natural Resources Conservation Service

**Antitrust Division**
NOTICES
National cooperative research notifications:
Grinding Optimization Venture, 67215
IMS Global Learning Consortium, Inc., 67215–67216
Nano-Engineered Thermal Interfaces Enabling Next Generation Microelectronics, 67216
Power Tool Institute Joint Venture Project, 67216
Roll to Roll Processing to Enable the Organic Electronic Revolution, 67216

**Army Department**
*See* Engineers Corps

**Centers for Disease Control and Prevention**
NOTICES
Grants and cooperative agreements; availability, etc.:
Home visitors; training skills improvement practices, 67171–67176
Human immunodeficiency virus (HIV)—
Africa and Caribbean; antiretroviral therapy programs for HIV-infected persons; rapid expansion, 67186–67192
Africa and Caribbean; blood transfusion services; rapid strengthening, 67177–67186

**Centers for Medicare & Medicaid Services**
*See* Inspector General Office, Health and Human Services Department
NOTICES
Agency information collection activities; proposals, submissions, and approvals, 67192–67193

**Children and Families Administration**
NOTICES
Grant and cooperative agreement awards:
Concordia Avondale Campus, 67194

**Coast Guard**
NOTICES
Meetings:
Upper Chesapeake Estuary Area Committee, 67200

**Commerce Department**
*See* Industry and Security Bureau
*See* International Trade Administration
*See* National Oceanic and Atmospheric Administration

**Committee for the Implementation of Textile Agreements**
NOTICES
Textile and apparel categories:
Andean Trade Promotion and Drug Eradication Act; short supply requests—
Viscose rayon filament yarns, 67153

**Commodity Credit Corporation**
NOTICES
Agency information collection activities; proposals, submissions, and approvals, 67133

**Cooperative State Research, Education, and Extension Service**
NOTICES
Grants and cooperative agreements; availability, etc.:
Geospatial Extension Specialists Program, 67133–67144

**Copyright Office, Library of Congress**
RULES
Copyright Arbitration Royalty Panel rules and procedures:
Musical compositions performance by colleges and universities; cost of living adjustment, 67045

**Customs Service**
RULES
Andean Trade Promotion and Drug Eradication Act; implementation
CFR correction, 67337–67352
Correction, 67337–67338

**Defense Department**
*See* Engineers Corps
*See* Navy Department
PROPOSED RULES
Federal Acquisition Regulation (FAR):
Excluded Parties List System enhancement, 67353–67355

**Education Department**
NOTICES
Grants and cooperative agreements; availability, etc.:
Postsecondary education—
US-Brazil Higher Education Consortia Program, 67155–67157

**Energy Department**
*See* Federal Energy Regulatory Commission

**Engineers Corps**
NOTICES
Environmental statements; availability, etc.:
King Cove and Cold Bay, AK; year-round marine-road transportation system, 67153–67154

**Environmental Protection Agency**
RULES
Air quality implementation plans; approval and promulgation; various States:
Nebraska, 67045–67051
NOTICES
Grants, State and local assistance:
Grantee performance evaluation reports—
Various States, 67164
Meetings:
Science Advisory Board, 67164–67165

**Federal Aviation Administration**
RULES
Airworthiness directives:
Boeing, 67024–67025, 67027–67030

Dassault, 67025–67027
Eurocopter France, 67018–67021
McDonnell Douglas, 67021–67024
PROPOSED RULES
Noise certification standards:
Subsonic jet airplanes and subsonic transport category large airplanes, 67329–67336
NOTICES
Aeronautical land-use assurance; waivers:
Waco Regional Airport, TX, 67255
Antidrug and alcohol misuse prevention programs for personnel engaged in specified aviation activities:
Random alcohol and drug testing; minimum annual percentage rates, 67255
Passenger facility charges; applications, etc.:
Altoona-Blair County Airport, PA, 67255
Bismarck, ND, et al., 67255–67258

**Federal Communications Commission**
NOTICES
Agency information collection activities; proposals, submissions, and approvals, 67165–67170

**Federal Election Commission**
RULES
Contribution and expenditure limitations and prohibitions:
Leadership PACs, 67013–67018

**Federal Emergency Management Agency**
RULES
Flood elevation determinations:
North Carolina and New York, 67056–67068
Various States, 67052–67056
Flood insurance; communities eligible for sale:
Various States, 67051–67052
PROPOSED RULES
Flood elevation determinations:
Massachusetts, 67106–67107
North Carolina and Pennsylvania, 67107–67128

**Federal Energy Regulatory Commission**
NOTICES
Meetings:
Saltville Gas Storage Co. L.L.C.; site visit, 67163
Preliminary permits surrender:
Frederick, Mark R., 67164
*Applications, hearings, determinations, etc.:*
Canyon Creek Compression Co., 67157–67158
Chandeleur Pipe Line Co., 67158
Columbia Gas Transmission Corp., 67158–67159
El Past Natural Gas Co., 67159
Enbridge Pipelines L.L.C., 67159
Enogex Inc., 67159–67160
Gulfstream Natural Gas System, L.L.C, 67160
Natural Gas Pipeline Co. of America, 67160
NRG Energy, Inc., 67160–67161
Overthrust Pipeline Co., 67161
Tennessee Gas Pipeline Co., 67161
Texas Eastern Transmission, LP, 67161–67162
Transcontinental Gas Pipe Line Corp., 67162
Western Gas Interstate Co., 67163

**Federal Highway Administration**
NOTICES
Environmental statements; availability, etc.:
Kootenai and Bonner Counties, ID, 67258

**Federal Motor Carrier Safety Administration**
NOTICES
Meetings:
Transportation Research Board; forum, 67258–67259

**Federal Railroad Administration**
NOTICES
Railroad Safety Advisory Committee; working group activity update, 67259–67260

**Federal Reserve System**
NOTICES
Banks and bank holding companies:
Change in bank control, 67170
Formations, acquisitions, and mergers, 67170–67171

**Food and Drug Administration**
PROPOSED RULES
Administrative practice and procedure:
Civil money penalties hearings; maximum penalty amounts and compliance with Federal Civil Penalties Inflation Adjustment Act, 67094–67097
Medical devices:
Dental devices—
Gold based alloys, precious metal alloys and base metal alloys; special controls designation, 67097–67100
NOTICES
Agency information collection activities; proposals, submissions, and approvals, 67194
Animal drugs, feeds, and related products:
Patent extension; regulatory review period determinations—
DERAMAXX, 67194–67195
Food additive petitions:
Vulcan Chemicals, 67195–67196
Reports and guidance documents; availability, etc.:
Dental devices—
Precious metal alloys and base metal alloys; Class II special controls, 67196–67197

**Forest Service**
NOTICES
Environmental statements; notice of intent:
Umpqua National Forest, OR, 67144
Meetings:
Willamette Province Advisory Committee, 67144

**General Services Administration**
PROPOSED RULES
Federal Acquisition Regulation (FAR):
Excluded Parties List System enhancement, 67353–67355

**Grain Inspection, Packers and Stockyards Administration**
NOTICES
Agency designation actions:
Indiana and Nebraska, 67144–67146
Indiana and Virginia, 67146

**Health and Human Services Department**
*See* Centers for Disease Control and Prevention
*See* Centers for Medicare & Medicaid Services
*See* Children and Families Administration
*See* Food and Drug Administration
*See* Inspector General Office, Health and Human Services Department

**Homeland Security Department**
*See* Coast Guard

*See* Customs Service
*See* Federal Emergency Management Agency

**Housing and Urban Development Department**
RULES
Low income housing:
Supportive housing for elderly or persons with disabilities; mixed-finance development, 67315–67327
NOTICES
Agency information collection activities; proposals, submissions, and approvals, 67201–67202

**Industry and Security Bureau**
RULES
Export administration regulations:
Commerce Control List—
Chemical and biological weapons controls; cross flow filtration equipment; Australia Group understandings implementation; correction, 67030–67032
NOTICES
Chemical Weapons Convention; impact on commercial activities involving Schedule 1 chemicals through 2003 CY, 67147–67148
Export privileges, actions affecting:
Ahwaz Steel Commercial & Technical Service Gmbh, 67148–67149
Metal & Mineral Trade Sarl., 67149–67150

**Inspector General Office, Health and Human Services Department**
NOTICES
Program exclusions; list, 67197–67200

**Interior Department**
*See* National Park Service
*See* Surface Mining Reclamation and Enforcement Office
NOTICES
Committees; establishment, renewal, termination, etc.:
Invasive Species Advisory Committee, 67202

**International Trade Administration**
NOTICES
Export trade certificates of review, 67150–67152

**International Trade Commission**
NOTICES
Import investigations:
Universal transmitters for garage door openers, 67214–67215
Meetings; Sunshine Act, 67215

**Justice Department**
*See* Antitrust Division
NOTICES
Pollution control; consent judgments:
Portage Point Inn et al., 67215

**Labor Department**
*See* Mine Safety and Health Administration

**Library of Congress**
*See* Copyright Office, Library of Congress

**Mine Safety and Health Administration**
NOTICES
Product approval requirements; international standards equivalency; review:
International Electrotechnical Commission; intrinsic safety and explosion-proof enclosures, 67216–67217
Safety standard petitions:
Genwal Resources, Inc., et al., 67217–67219

**National Aeronautics and Space Administration**
PROPOSED RULES
Federal Acquisition Regulation (FAR):
Excluded Parties List System enhancement, 67353–67355

**National Highway Traffic Safety Administration**
RULES
Motor vehicle safety standards:
Fuel system integrity, 67068–67086
NOTICES
Grants and cooperative agreements; availability, etc.:
Safety belt use rates, 67260–67266

**National Oceanic and Atmospheric Administration**
RULES
Fishery conservation and management:
Alaska; fisheries of Exclusive Economic Zone—
Pacific cod, 67086–67093
PROPOSED RULES
Fishery conservation and management:
West Coast States and Western Pacific fisheries—
Highy migratory species; correction, 67132
NOTICES
Permits:
Endangered and threatened species, 67152

**National Park Service**
NOTICES
Native American human remains, funerary objects; inventory, repatriation, etc.:
American Museum of Natural History, New York, NY, 67203–67204
Colorado College, Colorado Springs, CO, 67204–67205
Fish and Wildlife Service, Region 7, Anchorage, AK, 67205
Illinois State Museum, Springfield, IL, 67205–67206
Interior Department—
Reclamation Bureau, Phoenix, AZ, 67206–67208
Kansas State Historical Society, Topeka, KS, 67208
Longyear Museum of Anthropology, Colgate University, Hamilton, NY, 67208–67209
Minnesota Indian Affairs Council, Bemidji, MN, 67209–67210
Navy Department, Naval Surface Warfare Center, Panama City, FL, 67210–67211
Nebraska State Museum, University of Nebraska, Lincoln, NE, 67211–67212
Peabody Museum of Archaeology and Ethnology, Harvard University, Cambridge, MA; correction, 67212
Peabody Museum of Archaeology and Ethnology, Harvard University, Cambridge, MA, 67212–67214

**Natural Resources Conservation Service**
NOTICES
Reports and guidance documents; availability, etc.:
National Handbook of Conservation Practices; conservation practice standards, new or revised, 67146–67147

**Navy Department**
NOTICES
Meetings:
Chief of Naval Operations Executive Panel, 67154–67155

**Nuclear Regulatory Commission**
NOTICES
Meetings:
Licensing Support Network Advisory Review Panel, 67219–67220
Reports and guidance documents; availability, etc.:
National origin discrimination as it affects limited English proficient persons; prohibition; policy guidance to Federal financial assistance recipients, 67220–67229
*Applications, hearings, determinations, etc.:*
System Energy Resources, Inc, 67219

**Pension Benefit Guaranty Corporation**
RULES
Single-employer plans:
Allocation of assets—
Valuation of benefits and assets; expected retirement age, 67033–67035
Disclosure to participants; benefits payable in terminated plans, 67032–67033

**Research and Special Programs Administration**
PROPOSED RULES
Pipeline safety:
Gas and hazardous liquid gathering lines; safety regulation; meeting, 67129–67132
Internal inspection devices; information request, 67128–67129

**Securities and Exchange Commission**
NOTICES
Investment Company Act of 1940:
Order applications—
Lehman Brothers Inc. et al, 67229–67231
Meetings; Sunshine Act, 67231–67232
Public Utility Holding Company Act of 1935 filings, 67232–67249
Self-regulatory organizations; proposed rule changes:
Cincinnati Stock Exchange, Inc., 67249
National Association of Securities Dealers, Inc., 67249–67253

**State Department**
RULES
International Traffic in Arms regulations:
Angola, embargo lifted; Iraq, denial policy partially lifted Correction, 67032
NOTICES
Commercial export licenses; notifications to Congress, 67253–67254

**State Justice Institute**
NOTICES
Reports and guidance documents; availability, etc.:
Grants, cooperative agreements, and contracts; guidelines, 67267–67314

**Surface Mining Reclamation and Enforcement Office**
RULES
Permanent program and abandoned mine land reclamation plan submissions:
West Virginia, 67035–67045

**Textile Agreements Implementation Committee**
*See* Committee for the Implementation of Textile Agreements

**Transportation Department**
*See* Federal Aviation Administration
*See* Federal Highway Administration
*See* Federal Motor Carrier Safety Administration
*See* Federal Railroad Administration
*See* National Highway Traffic Safety Administration
*See* Research and Special Programs Administration

**Treasury Department**
PROPOSED RULES
Terrorism Risk Insurance Program
Initial claims procedures, 67100–67106

---

**Separate Parts In This Issue**

**Part II**
State Justice Institute, 67267–67314

**Part III**
Housing and Urban Development Department, 67315–67327

**Part IV**
Transportation Department, Federal Aviation Administration, 67329–67336

**Part V**
Homeland Security Department, Customs Service, 67337–67352

**Part VI**
Defense Department; General Services Administration; National Aeronautics and Space Administration, 67353–67355

---

**Reader Aids**

Consult the Reader Aids section at the end of this issue for phone numbers, online resources, finding aids, reminders, and notice of recently enacted public laws.

To subscribe to the Federal Register Table of Contents LISTSERV electronic mailing list, go to http://listserv.access.gpo.gov and select Online mailing list archives, FEDREGTOC-L, Join or leave the list (or change settings); then follow the instructions.

## CFR PARTS AFFECTED IN THIS ISSUE

A cumulative list of the parts affected this month can be found in the Reader Aids section at the end of this issue.


**11 CFR**
100.....67013
102.....67013

**14 CFR**
39 (6 documents) .....67018, 67020, 67021, 67024, 67025, 67027

**Proposed Rules:**
36.....67330
91.....67330

**15 CFR**
742.....67030
774.....67030

**19 CFR**
10 (2 documents) .....67338
163 (2 documents) .....67338

**21 CFR**

**Proposed Rules:**
17.....67094
872.....67097

**22 CFR**
126.....67032

**24 CFR**
891.....67316

**29 CFR**
4011.....67032
4022.....67033
4044.....67035

**30 CFR**
948.....67035

**31 CFR**

**Proposed Rules:**
50.....67100

**37 CFR**
253.....67045

**40 CFR**
52.....67045

**44 CFR**
64.....67051
65.....67052
67.....67056

**Proposed Rules:**
67 (2 documents) .....67106, 67107

**48 CFR**

**Proposed Rules:**
2.....67354
9.....67354
22.....67354
28.....67354
44.....67354
52.....67354

**49 CFR**
571.....67068
586.....67068

**Proposed Rules:**
192 (2 documents) .....67128, 67129
195.....67129

**50 CFR**
679.....67086

**Proposed Rules:**
660.....67132

# Rules and Regulations

Federal Register

Vol. 68, No. 230

Monday, December 1, 2003

This section of the FEDERAL REGISTER contains regulatory documents having general applicability and legal effect, most of which are keyed to and codified in the Code of Federal Regulations, which is published under 50 titles pursuant to 44 U.S.C. 1510.

The Code of Federal Regulations is sold by the Superintendent of Documents. Prices of new books are listed in the first FEDERAL REGISTER issue of each week.

## FEDERAL ELECTION COMMISSION

### 11 CFR Parts 100 and 102

**[Notice 2003–22]**

### Leadership PACs

**AGENCY:** Federal Election Commission.

**ACTION:** Final rules and transmittal of regulations to Congress.

**SUMMARY:** The Federal Election Commission is revising portions of its regulations to address the relationship between the authorized committee of a Federal candidate or officeholder and entities that are not authorized committees but are associated with the Federal candidate or officeholder. The final rules state that authorized committees and entities that are not authorized committees shall not be deemed to be affiliated. Thus, certain disbursements by those unaffiliated entities will be treated as in-kind contributions to the candidates. Further information is contained in the Supplementary Information that follows.

**EFFECTIVE DATE:** December 31, 2003.

**FOR FURTHER INFORMATION CONTACT:** Ms. Mai T. Dinh, Acting Assistant General Counsel, Mr. J. Duane Pugh Jr., Senior Attorney, or Mr. Anthony T. Buckley, Attorney, 999 E Street, NW., Washington, DC 20463, (202) 694–1650 or (800) 424–9530.

**SUPPLEMENTARY INFORMATION:** The Commission is adopting final rules at 11 CFR 100.5(g)(5) to address the relationship between authorized committees and unauthorized committees that are associated with a Federal candidate or officeholder, more commonly known as ''leadership PACs,'' as well as other entities that are not Federal political committees, but are established, financed, maintained, or controlled by, or acting on behalf of, a Federal candidate or officeholder (collectively ''leadership PACs''). Previously, the Commission has examined this relationship on a case-by-case basis to determine whether transactions between an authorized committee and a leadership PAC constituted in-kind contributions or resulted in affiliation under 11 CFR 100.5(g). In promulgating rules of general applicability, the Commission is changing its case-by-case approach and is deciding to analyze these transactions as in-kind contributions exclusively and not to engage in an affiliation analysis in examining the relationship between an authorized committee and a leadership PAC. As such, under the new rules, an authorized committee and a leadership PAC will not be deemed to be affiliated. Additionally, the adoption of these rules requires a change in the Commission's regulations at 11 CFR 102.2(b)(1)(i), which, in part, governs the disclosure of the names of all unauthorized committees affiliated with an authorized committee.

The Commission published a Notice of Proposed Rulemaking on December 26, 2002, 67 FR 78753 (''NPRM''). Written comments were due by January 31, 2003. Comments were received from: the Campaign and Media Legal Center; the Center for Responsive Politics and Common Cause and Democracy 21 (joint comment); Cleta Mitchell, Esq.; Paul E. Sullivan, Esq.; Republicans Members of the U.S. House of Representatives Tom DeLay, Roy Blunt, Deborah Pryce, David Dreier, John Doolittle, Jack Kingston, Tom Reynolds, Bob Ney, Tom Davis, Phil English, Greg Walden, Buck McKeon, Hal Rogers, and Pete Sessions, and the American Liberty PAC, American Success PAC, Federal Victory Fund, Help America's Leaders PAC, Pacific Northwest Leadership Fund, People for Enterprise, Trade, and Economic Growth, Together for Our Majority PAC, and the 21st Century Fund (joint comment); the Rely on Your Beliefs Fund; and Lyn Utrecht, Esq., Eric Kleinfeld, Esq., Jim Lamb, Esq., and Pat Fiori, Esq. (joint comment). The comments are available at *http://www.fec.gov/register.htm* under ''Leadership PACs.'' The Commission held a public hearing on February 26, 2003, at which it heard testimony from seven witnesses: Donald McGahn, Esq.; Cleta Mitchell, Esq.; Paul E. Sullivan, Esq.; Lawrence M. Noble, Esq.; Paul Sanford, Esq.; Glen Shor, Esq.; and Donald Simon, Esq. Transcripts of the hearing are available at the website identified above. Please note that, for purposes of this document, ''comment'' and ''commenter'' apply to both written comments and oral testimony at the public hearing.

Under the Administrative Procedures Act, 5 U.S.C. 553(d), and the Congressional Review of Agency Rulemaking Act, 5 U.S.C. 801(a)(1), agencies must submit final rules to the Speaker of the House of Representatives and the President of the Senate, and publish them in the **Federal Register** at least 30 calendar days before they take effect. The final rules that follow were transmitted to Congress on November 24, 2003.

### Explanation and Justification

### 11 CFR 100.5 Political Committee

### I. Background

The Federal Election Campaign Act of 1971, as amended (''FECA''), 2 U.S.C. 431 *et seq.*, defines ''authorized committee'' as ''the principal campaign committee or any other political committee authorized by a candidate under section 432(e)(1) of this title to receive contributions or make expenditures on behalf of such candidate.'' 2 U.S.C. § 431(6); *see also* 11 CFR 100.5(f)(1). ''Unauthorized committee'' is defined in the Commission's regulations as ''a political committee which has not been authorized in writing by a candidate to solicit or receive contributions or make expenditures on behalf of such *candidate*, or which has been disavowed pursuant to 11 CFR 100.3(a)(3).'' 11 CFR 100.5(f)(2) (emphasis added). An unauthorized committee may accept contributions in greater amounts than those allowed to be accepted by an authorized committee, *compare* 2 U.S.C. 441a(a)(1)(C) *with* 2 U.S.C. 441a(a)(1)(A), and, if it attains multicandidate committee status,[1] may contribute greater amounts to Federal candidates than those allowed to be contributed by an authorized

[1] A committee achieves multicandidate status when it has been registered under 2 U.S.C. 433 for not less than six months, has received contributions from more than 50 persons, and except for a State political party organization, has made contributions to five or more candidates for Federal office. 2 U.S.C. 441a(a)(4); 11 CFR 100.5(c)(3).

committee. *Compare* 2 U.S.C. 441a(a)(2)(A) *with* 2 U.S.C. 441a(a)(1)(A).

The term ''leadership PAC'' lacks a formal definition. Generally, such PACs ''are formed by individuals who are Federal officeholders and/or Federal candidates. The monies these committees receive are given to other Federal candidates to gain support when the officeholder seeks a leadership position in Congress, or are used to subsidize the officeholder's travel when campaigning for other Federal candidates. The monies may also be used to make contributions to party committees, including State party committees in key states, or donated to candidates for State and local office.'' *Notice of Proposed Rulemaking on Leadership PACs*, 67 FR 78753, 78754 (Dec. 26, 2002) (citations omitted).

Pursuant to 2 U.S.C. 441a(a)(5), ''all contributions made by political committees established or financed or maintained or controlled by any corporation, labor organization, or any other person, including any parent, subsidiary, branch, division, department, or local unit of such corporation, labor organization, or any other person, or by any group of such persons, shall be considered to have been made by a single political committee.''

Under the Commission's regulations, committees that are affiliated, that is, committees that are established, financed, maintained, or controlled by the same corporation, labor organization, person or group of persons, *et al.*, share a single limitation on the amount they can accept from any one contributor. 11 CFR 100.5(g), 110.3(a)(1), 110.3(a)(3)(ii). Typically, under FECA and the Commission's regulations, the Commission has treated ''leadership PACs'' as unauthorized political committees, and usually has not found them to be affiliated with authorized committees sharing contribution limits of affiliated committees.

In 1986 the Commission began a rulemaking to address affiliation in general, including leadership PACs. The Commission determined in 1989, however, to maintain its existing approach, noting that ''the Commission has concluded that this complex area is better addressed on a case-by-case basis.'' *Affiliated Committees, Transfers, Prohibited Contributions, Annual Contribution Limitations and Earmarked Contributions; Final Rule*, 54 FR 34098, 34101 (Aug. 17, 1989). The Commission embarked on this rulemaking in 2002, in part, to clarify its historic approach in examining the relationship and transactions between a candidate's authorized committee and a leadership PAC associated with that candidate. NPRM at 78755.

## II. Alternatives in the NPRM

The NPRM set forth three different ways of addressing the question of affiliation between an authorized committee and a leadership PAC. The first two proposals (Alternatives A and B) would have established factors for finding affiliation, with all of the consequences of affiliation applying as a result. The third proposal (Alternative C) sought to codify the Commission's existing practice.

Alternative A set out individual factors in proposed section 100.5(g)(5)(i), the presence of any one of which would result in affiliation. The factors were: (1) The candidate or officeholder, or their agent has signature authority on the unauthorized committee's checks; (2) funds contributed or disbursed by the unauthorized committee are authorized or approved by the candidate or officeholder or their agent; (3) the candidate or officeholder is clearly identified as described in 11 CFR 100.17 on either the stationery or letterhead of the unauthorized committee; (4) the candidate, officeholder or his campaign staff, office staff, or immediate family members, or any other agent, has the authority to approve, alter or veto the unauthorized committee's solicitations, contributions, donations, disbursements or contracts to make disbursements; and (5) the unauthorized committee pays for travel by the candidate, his campaign staff or office staff in excess of $10,000 per calendar year. The second factor would have been satisfied even if the officeholder or candidate or agent authorized or approved only some and not all of the disbursements.

Alternative B described two separate tests under which affiliation would have been found. Under proposed section 100.5(g)(5)(i)(A), affiliation would have existed if any one of the following factors were present: (1) The candidate or officeholder has signature authority on the entity's checks; (2) the candidate or officeholder must authorize or approve disbursements over a certain minimum amount; (3) the candidate or officeholder signs solicitation letters and other correspondence on behalf of the entity; (4) the candidate or officeholder has the authority to approve, alter or veto the entity's solicitations; (5) the candidate or officeholder has the authority to approve, alter, or veto the entity's contributions, donations, or disbursements; or (6) the candidate or officeholder has the authority to approve the entity's contracts. Under this alternative, the authorized committee and the leadership PAC would have been considered affiliated because the candidate or officeholder exercised sufficient influence to conclude that the candidate or officeholder established, financed, maintained, or controlled the leadership PAC.

If none of the above factors were present, affiliation could still be found under Alternative B of proposed section 100.5(g)(5)(i)(B) if any three of the following factors were present: (1) The campaign staff or immediate family members of the candidate or officeholder have the authority to approve, alter or veto the entity's solicitations; (2) the campaign staff or immediate family members of the candidate or officeholder have the authority to approve, alter, or veto the entity's contributions, donations, or disbursements; (3) the campaign staff or immediate family members of the candidate or officeholder have the authority to approve the entity's contracts; (4) the entity and the candidate or officeholder's authorized committees share, exchange, or sell contributor lists, voter lists, or other mailing lists directly to one another, or indirectly through the candidate or officeholder to one another; (5) the entity pays for the candidate or officeholder's travel anywhere except to or from the candidate or officeholder's home State or district; (6) the entity and the candidate or officeholder's authorized committees share office space, staff, a post office box, or equipment; (7) the candidate or officeholder's authorized committee(s) and the entity share common vendors; and (8) the name or nickname of the candidate or the officeholder, or other unambiguous reference to the candidate or officeholder appears on either the entity's stationery or letterhead.

Alternative C would have largely continued the Commission's current treatment of leadership PACs by treating a leadership PAC as affiliated with a candidate or officeholder's authorized committees unless the leadership PAC undertook activities that would indicate its primary purpose is not to influence the nomination or election of the candidate or officeholder involved. These activities are: (1) Only making disbursements to raise funds for party committees or to influence the nomination or election of persons other than the candidate or officeholder involved; (2) avoiding references to the candidacy or potential candidacy of the sponsoring candidate or officeholder in

any solicitations, communications or other materials of the unauthorized committee; (3) requiring that the candidate or officeholder make no reference to his or her candidacy or potential candidacy during his or her speeches or appearances on behalf of the leadership PAC; and (4) requiring that specified expenses would have to be reimbursed by a presidential campaign committee if the candidate or officeholder becomes a presidential candidate. If the leadership PAC did not conform its activities to these limitations, under Alternative C, it would be deemed to be an authorized committee.

**III. Comments**

*1. Question of Affiliation*

One commenter thought that Alternative A was contrary to FECA and not mandated by the Bipartisan Campaign Reform Act of 2002, Pub. L. 107–155, 116 Stat. 81(2002) (''BCRA''). Another commenter believed that this alternative would defeat the purpose of leadership PACs, and that it was sufficiently onerous that Federal officeholders could not and would not establish them. A third commenter agreed with this latter point, arguing that its terms went beyond what the authors of BCRA envisioned. One commenter disagreed with Alternative A's general structure, arguing that no one single factor is sufficient to prove affiliation absent express authorization by the candidate.

Other commenters disapproved of Alternative A because it did not allow for sufficient opportunities to find affiliation. One commenter stated that the alternative contained only a *per se* list and thus ignored numerous factors that indicated a relationship existed between two committees. Another commenter argued that Alternative A was insufficiently comprehensive to encompass all relationships covered by the statutory term ''established, financed, maintained, or controlled.'' Similarly, one commenter supported many of the factors of Alternative A, but believed it did not include enough factors and was not sufficiently flexible.

With respect to Alternative B, one commenter argued that it also was contrary to FECA and not mandated by BCRA. Another commenter felt that it essentially defeated the purpose of leadership PACs and was sufficiently onerous that the only conclusion to be drawn is that Federal officeholders could not and would not establish them. A third commenter agreed with this latter point, stating that Alternative B was a more burdensome version of Alternative A.

The commenter who disagreed with the general structure of Alternative A concurred that most of the eight factors listed should be considered in determining affiliation, but thought setting a specific number to be met could present problems. Of the three commenters who thought Alternative A was not sufficiently comprehensive, all three supported the structure of Alternative B, but did not feel it included enough factors. Each of these commenters proposed variations on Alternative B that included additional factors. Two of these commenters added a third option for finding affiliation, based on a ''totality of the circumstances.'' The commenter who did not include such an option argued that the rule should only apply to political committees under FECA and political organizations organized under 26 U.S.C. 527.

One commenter stated that Alternative C was a useful starting point for addressing the issue of the status of leadership PACs in the related candidate's own election. Another commenter thought that Alternative C provided a basis for a reasonable set of criteria defining and governing leadership PACs. This commenter suggested that certain amendments to Alternative C would be appropriate: (1) Specifically authorizing leadership PACs to contribute to State and local candidates and political parties within the limits and pursuant to State laws; (2) eliminating provisions that prohibit references to the related Federal candidate in solicitations or public appearances; and (3) requiring candidates and officeholders who become candidates for President and qualify for primary or general election financing to repay to the presidential campaign committee any expenses paid by the leadership PAC for travel, polling, staff, or other expenses made on behalf of the presidential campaign effort. Another commenter stated that Alternative C's proposed conditions are cumbersome and do not significantly improve the Commission's regulatory framework. This commenter suggested that the Commission should presume a leadership PAC is unaffiliated unless its activities are for the purpose of influencing the election of the connected Federal candidate.

Another commenter argued that Alternative C continues a current system that fails to properly consider affiliation, and that the mere absence of a leadership PAC attempt to influence the specific officeholder's election should not be conclusive evidence that the committees are not affiliated. This commenter argued that such a standard ignores the ''established, financed, maintained, or controlled by'' test in FECA. Two other commenters disapproved of Alternative C because it maintains the status quo.

*2. Impact of BCRA*

The Commission also sought comment as to how BCRA impacted a potential rule governing leadership PACs. Five commenters took issue with a suggestion in the NPRM that BCRA might require a finding of affiliation between an authorized committee and a leadership PAC. One commenter noted that one of BCRA's sponsors, Senator John McCain, had stated that, under BCRA's terms, ''[a] Federal officeholder or candidate is prohibited from soliciting contributions for a Leadership PAC that do not comply with Federal hard money source and amount limitations. Thus, the Federal officeholder or candidate could solicit up to $5,000 per year from an individual or PAC for the Federal account of the Leadership PAC and an additional $5,000 from an individual or PAC for the non-Federal account of the Leadership PAC.'' 148 Cong. Rec. S2140 (Mar. 20, 2002). Thus, this commenter argued that BCRA does not contemplate the automatic affiliation of leadership PACs with authorized committees.

This same commenter noted that a number of leaders of the House of Representatives, all of whom voted in favor of BCRA, have leadership PACs. One commenter argued that BCRA does not require or even suggest that the Commission change its approach with respect to leadership PACs and the proper focus is on whether the activities at issue are ''for the purpose of influencing the election of the individual who is connected with the PAC.'' In contrast, other commenters argued for an interpretation that BCRA prohibits Federal candidates and officeholders from maintaining soft money leadership PACs.

The Commission determined in the Soft Money rulemaking that BCRA does not allow a Federal candidate or officeholder to raise up to $5,000 separately for the Federal and non-Federal accounts of leadership PACs directly or indirectly established, financed, maintained, or controlled by that Federal candidate or officeholder. Rather, for their leadership PACs, they are limited to raising a total of $5,000 from any one source, per election cycle. *See Final Rules on Prohibited and Excessive Contributions: Non-Federal Funds or Soft Money,* 67 FR 49064, 49107 (July 29, 2002) (''Although

candidate PACs and Leadership PACs are not specifically mentioned, the legislative history indicates that 2 U.S.C. 441i(e)(1) is intended to prohibit Federal officeholders and candidates from soliciting any funds for these committees that do not comply with FECA's source and amount limitations.'') Therefore Federal candidates will not violate BCRA merely by establishing and raising money for their leadership PACs within the amount limitations and source prohibitions of FECA and BCRA.

*3. Other Concerns*

Two commenters, a leadership PAC and a joint comment from leadership PACs and Members of the House of Representatives, stated that their support of challengers helped those candidates who are often at a fundraising disadvantage when compared to incumbents.[2] One commenter argued that leadership PAC support for open seat candidates is sometimes critical to the viability of these candidates. Another commenter urged that the rule should be clear to ''encourage and validate'' the important role of these committees. This same commenter argued that leadership PACs should be encouraged as an avenue for Federal officeholders to support local and State parties and candidates in a manner that is disclosed to the Commission. This commenter also noted the importance of leadership PACs in their role of replacing the loss of non-Federal funds due to BCRA.

In response to the commenters arguing that BCRA precludes the result of the final rule issued today, the Commission concludes that BCRA's structure and wording answer these concerns. BCRA contemplates Federal candidate control of unauthorized committees. Otherwise, there would be no need to apply ''hard money'' limits. 2 U.S.C. 441i(e)(1). Thus, BCRA cannot be read generally to prohibit leadership PACs or to require that they be affiliated with a candidate's authorized committee. To the contrary, had Congress believed it was mandating a *per se* rule of affiliation between the two types of committees, BCRA would have gone further to require that contributions to those committees be aggregated with contributions to the candidate's authorized committee. BCRA requires no such aggregation.

[2] One commenter cited the Commission recent approval of campaign payment of candidate's salaries under certain circumstances as recognition of the importance of challengers receiving adequate funds.

**IV. Final Rule**

In previous advisory opinions and compliance matters, the Commission has examined leadership PACs whose activities were significantly intertwined with the activities of a Federal candidate's authorized committee. In such circumstances, the Commission had two competing, but equally valid, theories it could pursue. The Commission could consider whether the leadership PAC's actions made it affiliated with the authorized committee, or the Commission could consider the committees unaffiliated and determine whether the leadership PAC made in-kind contributions to the authorized committee. The Commission has declined in several instances to find that a leadership PAC was affiliated with a candidate's authorized committee, even where it was apparent that the committees were controlled by the same person. *See* affiliation factors at 11 CFR 100.5(g). Instead, the Commission exercised its discretion to determine that a leadership PAC made in-kind contributions to the related Federal candidate's campaign. Nonetheless, the Commission maintained its discretion to pursue either of the two competing approaches. In making these findings, the Commission typically found that committees formed by a candidate to further his or her campaign were affiliated; those formed for other purposes were not.

New § 100.5(g)(5) clarifies the relationship between an authorized committee and a leadership PAC by removing the possibility that a candidate's authorized committee can be affiliated with an entity that is not an authorized committee, even if the candidate established, financed, maintained, or controlled that entity.

In promulgating this final rule, the Commission has considered the 25-year history of Commission enforcement and policy precedent (*see, e.g.*, Advisory Opinions 1978–12, 1984–46, 2003–12; MURs 1870, 2897 and 3740) and the comments received in response to the NPRM. Alternatives A and B, with *per se* affiliation factors, would have been too rigid and overbroad. They would have created a basis for affiliation in situations where interaction between an authorized committee and a leadership PAC would not merit such designations if those interactions were undertaken by committees where neither committee was authorized in writing by the candidate. Although Alternative C reflects the Commission's historic approach to leadership PACs, it suggests that the Commission would examine them on a case-by-case basis. While the Commission has discretion to pursue either an affiliation or in-kind contributions analysis under FECA on a case-by-case basis when considering the circumstances surrounding leadership PACs, the Commission has decided, as a matter of policy, to adopt the in-kind contribution analysis as a rule of general applicability as they pertain to leadership PACs. *See Michigan* v. *EPA*, 268 F.3d 1075, 1087 (D.C. Cir. 2001) (discussing agency's discretion to choose rulemaking or case-by-case adjudicative procedure, *citing SEC* v. *Chenery*, 332 U.S. 174, 203 (1947) and *Vermont Yankee Nuclear Power Corp.* v. *Natural Resources Defense Council, Inc.,* 435 U.S. 519, 543 (1978)).

This decision does not affect affiliation between an authorized committee and any joint fundraising committee under 2 U.S.C. 432(e)(3)(ii) and 11 CFR 102.13(c)(1). Nor does it affect the ability of a national committee of a political party to be designated as the principal campaign committee of that party's presidential candidate under 2 U.S.C. 432(e)(3)(i) and 11 CFR 102.13(c)(2). Nor does this rule allow a leadership PAC to provide support to the Federal candidate or officeholder with whom it is associated in amounts different than those available to other similar political committees. Rather, a leadership PAC's provision of funds, goods, or services to *any* authorized committee will be treated as a contribution as defined in 2 U.S.C. 431(8), and thus limited to the amount at either 2 U.S.C. 441a(a)(1)(A) or 441a(a)(2)(A) per election, depending on whether the leadership PAC has attained multicandidate committee status, unless the activity falls within an exception to the definition of ''contribution'' or ''expenditure,'' or is a fair market value exchange of goods or services for the usual and normal charge. *See also* 2 U.S.C. 431(8).

The Commission considered the issue of whether its treatment of leadership PACs comports with the purpose of the affiliation rule: the protection of contribution limitations. In adopting new § 100.5(g)(5), the Commission is applying the affiliation rule separately to distinct types of political committees to enforce different contribution limits. Typically, committees that become affiliated already operate under similar limitations on the amounts of contributions that they can make and accept. The fact of affiliation simply means that they now share one common limitation. One of the complications in affiliating authorized committees with leadership PACs is that these types of committees are subject to different

amount limitations for making and receiving contributions. Requiring them to abide by a single contribution limit means choosing a limitation that is not intended for one of those committees.[3] Consequently, it is logical to view an authorized committee and a leadership PAC as separate committees, and transactions between them that benefit the authorized committee as contributions and not as a basis to find them affiliated.

Further, the consequences of new 11 CFR 100.5(g)(5) with respect to leadership PAC contribution limits are no different after the promulgation of this rule than before. Leadership PACs operating as unauthorized political committees—that is, political committees whose purpose is to support more than one Federal candidate—may receive up to $5000 per year from individuals, other persons, and multicandidate committees, and once they qualify as multicandidate committees, may contribute up to $5000 per candidate per election. *See* 2 U.S.C. 432(e)(3), 441a(a)(1)(C) and 441a(a)(2)(A); 11 CFR 110.1(d) and 110.2(b). Although such leadership PACs are not exposed to the consequences of affiliation with authorized committees, leadership PACs may still be deemed affiliated with other unauthorized committees. *See* 11 CFR 100.5(g)(2), (3), and (4); *see also* Advisory Opinion 1990–16 (where the Commission found that a committee organized under State law and devoted to supporting candidates for election to State and local office, that had previously been the campaign committee of the State's then-governor, was affiliated with a Federal political committee that had been organized by the governor and that had as its purpose supporting candidates for Federal office). Thus, the rule in new 11 CFR 100.5(g)(5) provides no new avenue for circumventing the separate contribution limitations applicable to authorized and unauthorized committees.

The Commission concludes that since its first examination of leadership PACs, these committees cannot be assumed to be acting as authorized committees. Rather, these PACs are worthy of the same treatment as other unauthorized committees that operate without presumptions as to their status. To the extent that leadership PACs are used to pay for costs that could and should otherwise be paid for by a candidate's authorized committee, such payments are in-kind contributions, subject to the Act's contribution limits and reporting requirements.

The Commission also concludes that in instances when leadership PAC activity results in an in-kind contribution to a candidate, Commission regulations adequately regulate such activity. 11 CFR 100.52(a) and (d), 109.20, 109.21, 109.23, 109.37; *see* MUR 5376 (Campaign America/Quayle); Report of the Audit Division on Bauer for President 2000, Inc., FEC Agenda Doc. No. 02–37, dated May 8, 2002 (considered in the Open Sessions on May 16, 2002 and May 23, 2002) (recommendations with respect to Campaign for Working Families PAC); MUR 3367 (Committee for America/Haig). These regulations, which define ''contribution'' and which address coordinated activities, will serve to ensure that leadership PACs are not used improperly to support the ''associated'' candidate's campaign.

The final rule at 11 CFR 100.5(g)(5) properly places the enforcement focus on the activity at issue. To support the proposition that rules governing in-kind contributions properly capture this activity, the Commission need look no further than its recently-issued final rule ''to treat certain expenses incurred by multicandidate committees as in-kind contributions benefiting publicly funded Presidential candidates.'' *Final Rules on Public Financing of Presidential Candidates and Nominating Conventions,* 68 FR 47386, 47407 (Aug. 8, 2003); 11 CFR 9034.10; 11 CFR 110.2(l). Although that rule was aimed at a somewhat different range of activity, the explanation and justification stated, ''For other situations not addressed [in the new regulations governing pre-candidacy activity with a nexus to a Presidential campaign], including when expenditures are paid for by multicandidate committees after candidacy, the general provisions describing in-kind contributions at 11 CFR 100.52(a) and (d), 109.20, 109.21, 109.23, and 109.37 would apply.'' *Final Rules on Public Financing of Presidential Candidates and Nominating Conventions,* 68 FR at 47407. The Commission intends symmetry between its regulations with respect to leadership PACs and its new rules applicable to certain pre-candidacy activity benefiting Presidential candidates by multicandidate committees.

The Commission also noted that the final rules in the *Public Financing of Presidential Candidates and Nominating Conventions,* 68 FR at 47408, ''in no way address situations where the Commission determines that the multicandidate political committee and the candidate's principal campaign committee are affiliated under 11 CFR 100.5(g)(4).'' With the new rule, the Commission has decided to examine these situations with a contribution analysis, instead of an affiliation analysis.

By its terms, new 11 CFR 100.5(g)(5) also applies to entities that are not political committees. Recently, the Commission examined the situation of a State ballot initiative committee that had been established by a Federal candidate and officeholder, but was not a registered Federal committee. AO 2003–12. The Commission found that the relationship between the ballot initiative committee and the Federal candidate and officeholder was sufficiently similar to the relationship between a traditional leadership PAC and its connected Federal candidate to warrant treating the Federal candidate and officeholder and the ballot initiative committee in the same manner as the Commission had historically treated leadership PACs for affiliation purposes. Therefore, under new 11 CFR 100.5(g)(5), the Commission would not examine the transactions between the Federal candidate and officeholder and the ballot initiative committee to determine whether the ballot initiative committee is affiliated with the Federal candidate and officeholder's authorized committee. Rather, the Commission would analyze the facts to determine whether the ballot initiative committee made an in-kind contribution to the Federal candidate and officeholder. Furthermore, the Commission will continue to use the affiliation factors in 11 CFR 300.2(c) to determine whether the Federal candidate and officeholder or his agent directly or indirectly established or finance or maintained or controlled the ballot initiative committee for purposes of the restrictions on the solicitation, receipt, transfer or disbursement of non-Federal funds in 2 U.S.C. 441i(e).

## V. Effect on Previous Advisory Opinions

As the Commission noted earlier, these new rules merely codify the discretion the Commission has exercised when the question of affiliation between an authorized committee and an unauthorized committee has come before it in the past. Thus, the final rules supersede

[3] Indeed, the NPRM sought comment on which of the two separate contribution limitations applicable to authorized and unauthorized committees should obtain in the event the Commission determined such committees would be affiliated. The one commenter who addressed this question believed that the FECA allowed the Commission no discretion in this matter, and that the lower contribution limits applicable to the authorized committee would have to be applied to the leadership PAC.

Advisory Opinions 1978–12, 1984–46, 1987–12, 1990–7, 1991–12, and 1993–22, only to the extent these advisory opinions suggest that an authorized committee can be affiliated with an unauthorized committee.

*11 CFR 102.2 Statement of Organization: Forms and Committee Identification Number*

The Commission's previous reporting regulations at 11 CFR 102.2(b)(1)(i) provided, in part, for the eventuality of an authorized committee being affiliated with an unauthorized committee, and mandated that a principal campaign committee disclose on its statement of organization the names and addresses of all unauthorized committees with which it is affiliated. Because the new rule in 11 CFR 100.5(g)(5) eliminates the possibility of a principal campaign committee, *i.e.* an authorized committee, being affiliated with an unauthorized committee, the provisions of § 102.2(b)(1)(i) addressing such a possibility are no longer valid. Accordingly, the Commission is revising § 102.2(b)(1)(i) to eliminate these provisions. Pursuant to the revised § 102.2(b)(1)(i), a principal campaign committee will still be required to disclose the names and addresses of all other authorized committees that have been authorized by its candidate. While this revision was not addressed in the NPRM, it is a logical and technical change necessitated by the new 11 CFR 100.5(g)(5).

*Certification of No Effect Pursuant to 5 U.S.C. 605(b) (Regulatory Flexibility Act)*

The Commission certifies that the final rules do not have a significant economic impact on a substantial number of small entities. The basis of this certification is that these rules only codify current Commission practice with respect to whether certain entities established, financed, maintained, controlled by, or acting on behalf of, Federal candidates, are affiliated with authorized committees of Federal candidates. Accordingly, these rules do not impose any additional costs on the contributors or the committees. Further, the primary purpose of the proposed revisions is to clarify the Commission's rules regarding affiliation and limits on contributions. This does not impose a significant economic burden because entities affected are already required to comply with the Act's requirements in these areas.

**List of Subjects**

*11 CFR Part 100*

Elections.

*11 CFR Part 102*

Registration, organization, and recordkeeping by political committees.

■ For the reasons set out in the preamble, the Federal Election Commission amends subchapter A of Chapter I of Title 11 of the *Code of Federal Regulations* as follows:

## PART 100—SCOPE AND DEFINITIONS

■ 1. The authority citation for part 100 continues to read as follows:

**Authority:** 2 U.S.C. 431, 434, 438(a)(8).

■ 2. In § 100.5, paragraph (g)(5) is added to read as follows:

**§ 100.5 Political committee (2 U.S.C. 431(4), (5), (6)).**

* * * * *

(g) * * *

(5) Notwithstanding paragraphs (g)(2) through (g)(4) of this section, no authorized committee shall be deemed affiliated with any entity that is not an authorized committee.

## PART 102—REGISTRATION, ORGANIZATION, AND RECORDKEEPING BY POLITICAL COMMITTEES

■ 3. The authority citation for part 102 continues to read as follows:

**Authority:** 2 U.S.C. 432, 433, 434(a)(11), 438(a)(8), 441d.

■ 4. In § 102.2, paragraph (b)(1)(i) is revised to read as follows:

**§ 102.2 Statement of organization: Forms and committee identification number (2 U.S.C. 433(b), (c)).**

* * * * *

(b) * * *

(1) * * *

(i) A principal campaign committee is required to disclose the names and addresses of all other authorized committees that have been authorized by its candidate. Authorized committees need only disclose the name of their principal campaign committee.

* * * * *

Dated: November 24, 2003.

**Bradley A. Smith,**

*Vice Chairman, Federal Election Commission.*

[FR Doc. 03–29752 Filed 11–28–03; 8:45 am]

BILLING CODE 6715–01–P

## DEPARTMENT OF TRANSPORTATION

## Federal Aviation Administration

## 14 CFR Part 39

**[Docket No. 2001–SW–07–AD; Amendment 39–13371; AD 2003–24–02]**

**RIN 2120–AA64**

## Airworthiness Directives; Eurocopter France Model AS332C, L, L1, and L2 Helicopters

**AGENCY:** Federal Aviation Administration, DOT.

**ACTION:** Final rule.

**SUMMARY:** This amendment adopts a new airworthiness directive (AD) for the specified Eurocopter France (Eurocopter) model helicopters that requires inspecting the cockpit pedal unit (pedal unit) adjustment lever (lever) for a crack at specified time intervals by a dye-penetrant inspection and replacing any cracked lever with an airworthy lever before further flight. Modifying the pedal unit is also required and is a terminating action for the requirements of this AD. This amendment is prompted by cracks detected in the lever that creates an unsafe condition. The actions specified by this AD are intended to prevent failure of the lever, loss of access to the brake pedals on the ground or loss of yaw control in flight, and subsequent loss of control of the helicopter.

**DATES:** Effective January 5, 2004.

The incorporation by reference of certain publications listed in the regulations is approved by the Director of the Federal Register as of January 5, 2004.

**ADDRESSES:** The service information referenced in this AD may be obtained from American Eurocopter Corporation, 2701 Forum Drive, Grand Prairie, Texas 75053–4005, telephone (972) 641–3460, fax (972) 641–3527. This information may be examined at the FAA, Office of the Regional Counsel, Southwest Region, 2601 Meacham Blvd., Room 663, Fort Worth, Texas; or at the Office of the Federal Register, 800 North Capitol Street, NW., suite 700, Washington, DC.

**FOR FURTHER INFORMATION CONTACT:** Gary Roach, Aviation Safety Engineer, FAA, Rotorcraft Directorate, Regulations and Guidance Group, Fort Worth, Texas 76193–0110, telephone (817) 222–5130, fax (817) 222–5961.

**SUPPLEMENTARY INFORMATION:** A proposal to amend 14 CFR part 39 to add an AD for Eurocopter France Model AS332C, L, L1, and L2 helicopters was published as an NPRM in the **Federal**

**Register** on October 31, 2001 (66 FR 54960). That NPRM would have required inspecting the pedal unit lever for a crack and replacing any unairworthy lever, P/N 332A27–2344–20, with an airworthy lever. After publication of that NPRM, we determined that we should have incorporated the latest manufacturer's service information into our proposal, eliminated the proposed borescope inspection, and mandated terminating actions. Since those changes expanded the scope of the originally proposed rule, the FAA determined that it was necessary to reopen the comment period to provide additional opportunity for public comment. A supplemental NPRM was published in the **Federal Register** on March 7, 2003 (68 FR 11014). That action proposed to require inspecting the pedal unit lever, part number (P/N) 332A27.2344.20, that has not been modified in accordance with MOD 0726179, for a crack at specified time intervals by a dye-penetrant inspection, and replacing any cracked lever with an airworthy lever before further flight. That action also proposed to provide a terminating action for the AD through a modification of the pedal unit.

The Direction Generale De L'Aviation Civile (DGAC), the airworthiness authority for France, notified the FAA that an unsafe condition may exist on Eurocopter Model AS332C, L, L1, and L2 helicopters. The DGAC advises of several cases of failure of the lever, which might lead to temporary loss of access to the brake pedals during aircraft taxiing or difficulties in ensuring the yaw control of the aircraft in flight.

Eurocopter has issued Eurocopter Alert Service Bulletin No. 67.00.19, dated July 23, 2001, which describes the dye-penetrant inspection of the pedal units, and Eurocopter Alert Service Bulletin No. 67.00.20, dated June 8, 2001, which describes replacing the pilot's and co-pilot's pedal adjustment levers. The DGAC classified these alert service bulletins as mandatory and issued AD Nos. 2000–487–017(A)R1 and 2000–486–077(A)R1, both dated September 5, 2001, to ensure the continued airworthiness of these helicopters in France.

Interested persons have been afforded an opportunity to participate in the making of this amendment. No comments were received on the proposal or the FAA's determination of the cost to the public. The FAA has determined that air safety and the public interest require the adoption of the rule as proposed except the compliance time for the terminating action was proposed to be before June 5, 2003. However, since that date has already passed, we are extending that date to 90 days after the publication of this AD. We have determined that this change will neither increase the economic burden on any operator nor increase the scope of the AD.

On July 10, 2002, we issued a new version of 14 CFR part 39 (67 FR 47997, July 22, 2002), which governs the FAA's AD system. This regulation now includes material that relates to special flight permits, alternative methods of compliance, and altered products. However, for clarity and consistency in this final rule, we have retained the language of the NPRM and SNPRM regarding that material.

The FAA estimates that 3 helicopters of U.S. registry will be affected by this AD, and that it will take approximately 5 work hours to accomplish the dye-penetrant inspection; 5 work hours to remove and replace the pedal unit assembly with a new pedal assembly, or 6 work hours to remove, modify, and replace the modified pedal unit assembly. The average labor rate is $60 per work hour. Required parts will cost approximately $4,990 for replacing a cracked pedal unit assembly with a new pedal unit assembly, or $290 for modifying the installed pedal unit. Based on these figures, the total cost impact of the AD on U.S. operators is estimated to be $16,770 to replace the pedal unit assembly throughout the entire fleet, or $2,730 to modify the pedal unit for the entire fleet, assuming one dye-penetrant inspection regardless of which method of compliance is applicable.

The regulations adopted herein will not have a substantial direct effect on the States, on the relationship between the national Government and the States, or on the distribution of power and responsibilities among the various levels of government. Therefore, it is determined that this final rule does not have federalism implications under Executive Order 13132.

For the reasons discussed above, I certify that this action (1) is not a ''significant regulatory action'' under Executive Order 12866; (2) is not a ''significant rule'' under DOT Regulatory Policies and Procedures (44 FR 11034, February 26, 1979); and (3) will not have a significant economic impact, positive or negative, on a substantial number of small entities under the criteria of the Regulatory Flexibility Act. A final evaluation has been prepared for this action and it is contained in the Rules Docket. A copy of it may be obtained from the Rules Docket at the location provided under the caption **ADDRESSES.**

### List of Subjects in 14 CFR Part 39

Air transportation, Aircraft, Aviation safety, Incorporation by reference, Safety.

### Adoption of the Amendment

Accordingly, pursuant to the authority delegated to me by the Administrator, the Federal Aviation Administration amends part 39 of the Federal Aviation Regulations (14 CFR part 39) as follows:

## PART 39—AIRWORTHINESS DIRECTIVES

■ 1. The authority citation for part 39 continues to read as follows:

**Authority:** 49 U.S.C. 106(g), 40113, 44701.

### § 39.13 [Amended]

■ 2. Section 39.13 is amended by adding a new airworthiness directive to read as follows:

**2003–24–02 Eurocopter France:** Amendment 39–13371. Docket No. 2001–SW–07–AD.

*Applicability:* Model AS332C, L, L1, and L2 helicopters, with a pilot or co-pilot anti-torque pedal adjustment lever (lever), part number (P/N) 332A27.2344.20, that has not been modified in accordance with MOD 0726179, installed, certificated in any category.

**Note 1:** This AD applies to each helicopter identified in the preceding applicability provision, regardless of whether it has been otherwise modified, altered, or repaired in the area subject to the requirements of this AD. For helicopters that have been modified, altered, or repaired so that the performance of the requirements of this AD is affected, the owner/operator must request approval for an alternative method of compliance in accordance with paragraph (e) of this AD. The request should include an assessment of the effect of the modification, alteration, or repair on the unsafe condition addressed by this AD; and if the unsafe condition has not been eliminated, the request should include specific proposed actions to address it.

*Compliance:* Required as indicated, unless accomplished previously.

To prevent failure of the lever, loss of braking ability on the ground or loss of yaw control in flight, and subsequent loss of control of the helicopter, accomplish the following:

(a) For helicopters with 4,450 or more hours time-in-service (TIS), within 50 hours TIS and thereafter at intervals not to exceed 1,500 hours TIS, perform a dye-penetrant inspection of the lever, P/N 332A27.2344.20, in accordance with paragraph 2.B. of the Accomplishment Instructions in Eurocopter Alert Service Bulletin (ASB) No. 67.00.19, dated July 23, 2001, except returning levers and reporting to the manufacturer are not required.

(b) For helicopters with less than 4,450 hours TIS, on or before accumulating 4,500 hours TIS, and thereafter at intervals not to

exceed 1,500 hours TIS, perform a dye-penetrant inspection of the lever, P/N 332A27.2344.20, in accordance with paragraph 2.B. of the Accomplishment Instructions in ASB No. 67.00.19, dated July 23, 2001, except returning levers and reporting to the manufacturer are not required.

(c) Replace any cracked lever with an airworthy lever before further flight.

(d) Before March 1, 2004, modify the pedal unit and replace the adjustment levers in accordance with the Accomplishment Instructions, Paragraph 2, in ASB No. 67.00.20, dated June 8, 2001. Modifying the pedal unit and replacing the adjustment levers in accordance with ASB 67.00.20, dated June 8, 2001, is a terminating action for the requirements of this AD.

(e) An alternative method of compliance or adjustment of the compliance time that provides an acceptable level of safety may be used if approved by the Manager, Safety Management Group, Rotorcraft Directorate, FAA. Operators shall submit their requests through an FAA Principal Maintenance Inspector, who may concur or comment and then send it to the Manager, Safety Management Group.

**Note 2:** Information concerning the existence of approved alternative methods of compliance with this AD, if any, may be obtained from the Safety Management Group.

(f) Special flight permits will not be issued.

(g) The inspections, replacements (if necessary), and modifications shall be done in accordance with Eurocopter Alert Service Bulletin Nos. 67.00.19, dated July 23, 2001, and 67.00.20, dated June 8, 2001. This incorporation by reference was approved by the Director of the Federal Register in accordance with 5 U.S.C. 552(a) and 1 CFR part 51. Copies may be obtained from American Eurocopter Corporation, 2701 Forum Drive, Grand Prairie, Texas 75053–4005, telephone (972) 641–3460, fax (972) 641–3527. Copies may be inspected at the FAA, Office of the Regional Counsel, Southwest Region, 2601 Meacham Blvd., Room 663, Fort Worth, Texas; or at the Office of the Federal Register, 800 North Capitol Street, NW., suite 700, Washington, DC.

(h) This amendment becomes effective on January 5, 2004.

**Note 3:** The subject of this AD is addressed in Direction Generale De L'Aviation Civile (France) AD Nos. 2000–487–017(A)R1 and 2000–486–077(A)R1, both dated September 5, 2001.

Issued in Fort Worth, Texas, on November 17, 2003.

**David A. Downey,**

*Manager, Rotorcraft Directorate, Aircraft Certification Service.*

[FR Doc. 03–29224 Filed 11–28–03; 8:45 am]

BILLING CODE 4910–13–P

## DEPARTMENT OF TRANSPORTATION

## Federal Aviation Administration

## 14 CFR Part 39

**[Docket No. 2003–SW–09–AD; Amendment 39–13363; AD 2003–22–15]**

**RIN 2120–AA64**

## Airworthiness Directives; Eurocopter France Model SA–365N, N1, AS–365N2, and AS 365 N3 Helicopters

**AGENCY:** Federal Aviation Administration, DOT.

**ACTION:** Final rule.

**SUMMARY:** This amendment adopts a new airworthiness directive (AD) for the specified Eurocopter France (Eurocopter) model helicopters that requires inspecting the fuel air vent hoses (air vent hoses) for chafing and fuel leakage in the interference areas, inspecting the length of the latch support attachment screws, installing spacers to prevent interference with the latch support attachment screws, and removing one tyrap clamp support. This amendment is prompted by a report of a fuel leak in the air vent hose at the 9° frame on the pilot's side of the helicopter. The actions specified by this AD are intended to prevent fuel leakage, toxic fumes inside the cabin creating a fire hazard that could lead to a fire and smoke in the cabin, and subsequent loss of control of the helicopter.

**DATES:** Effective January 5, 2004.

The incorporation by reference of certain publications listed in the regulations is approved by the Director of the Federal Register as of January 5, 2004.

**ADDRESSES:** The service information referenced in this AD may be obtained from American Eurocopter Corporation, 2701 Forum Drive, Grand Prairie, Texas 75053–4005, telephone (972) 641–3460, fax (972) 641–3527. This information may be examined at the FAA, Office of the Regional Counsel, Southwest Region, 2601 Meacham Blvd., Room 663, Fort Worth, Texas; or at the Office of the Federal Register, 800 North Capitol Street, NW., suite 700, Washington, DC.

**FOR FURTHER INFORMATION CONTACT:** Ed Cuevas, Aviation Safety Engineer, FAA, Rotorcraft Directorate, Safety Management Group, Fort Worth, Texas 76193–0111, telephone (817) 222–5355, fax (817) 222–5961.

**SUPPLEMENTARY INFORMATION:** A proposal to amend 14 CFR part 39 to include an AD for the specified model helicopters was published in the **Federal Register** on July 16, 2003 (68 FR 41972). That action proposed to require, within 50 hours time-in-service (TIS) or 1 month, whichever occurs first, inspecting the fuel air vent hoses for chafing and fuel leakage in the interference areas and replacing leaking air vent hoses. It also proposed to require inspecting the length of the latch support attachment screws on both passenger doors, and if necessary, installing airworthy attachment screws. Finally, the AD proposed to require installing spacers to prevent interference with the latch support attachment screws and the removal of one tyrap clamp support.

The Direction Generale De L'Aviation Civile (DGAC), the airworthiness authority for France, notified the FAA that an unsafe condition may exist on Eurocopter Model AS 365N, N1, N2, and AS 365 N3 helicopters. The DGAC advises of a report of a fuel leak that was discovered on the cabin floor of an aircraft, at the air vent hose, at the 9° frame, on the pilot's side. The fuel leak was caused by interference between the air vent hose and the attachment screws of the latch support of the right-hand front passenger door.

Eurocopter has issued Alert Telex No. 28.00.31, dated January 14, 2003, that describes:

- Checking the condition of the air vent hoses in the interference areas for damage to the external protection of the air vent hoses and fuel leaks, and if leaks are discovered, replacing the hoses and if the external protection is damaged, replacing the hose at 500 hours time-in-service (TIS);
- Protecting the air vent hoses in the interference areas with adhesive tape;
- Checking the attachment screws of the latch support on the right-hand and left-hand sides for correct length;
- On the right-hand side of the aircraft, installing spacers to prevent any interference between the attachment screws of the latch support and the air vent hose; and
- On the left-hand side of the aircraft, removing one of the tyrap clamp supports that secure the air vent hose to the 9° frame at the latch support.

The DGAC classified this alert telex as mandatory and issued AD 2003–028(A), dated February 5, 2003, to ensure the continued airworthiness of these helicopters in France.

Interested persons have been afforded an opportunity to participate in the making of this amendment. No comments were received on the proposal or the FAA's determination of the cost to the public. The FAA has determined that air safety and the public interest require the adoption of the rule as proposed.

The FAA estimates that this AD will affect 45 helicopters of U.S. registry and the actions will take approximately 3 work hours per helicopter to accomplish at an average labor rate of $60 per work hour. Two additional work hours will be required to replace a hose. Required parts will cost approximately:

- $229 for the air vent hose, part number (P/N) 365A55–3044–07 (3 each estimated);
- $139 for the air vent hose, P/N 365A55–3044–09 (3 each estimated);
- $1 for the spacer, P/N E0688–02 (2 each required per helicopter);
- $1 for the screw, P/N 22256BC040012L (4 each per helicopter);
- $1 for the screw, P/N 22256BC050012L (2 each per helicopter); and
- $.50 for the clamp, P/N E0043–1C0 (2 each per helicopter).

Based on these figures, we estimate the total cost impact of the AD on U.S. operators would be $9,609, assuming that six air vent hoses (3 of each kind) will need to be replaced and 2 spacers, 6 screws, and 2 clamps will be replaced in the entire fleet.

The regulations adopted herein will not have a substantial direct effect on the States, on the relationship between the national Government and the States, or on the distribution of power and responsibilities among the various levels of government. Therefore, it is determined that this final rule does not have federalism implications under Executive Order 13132.

For the reasons discussed above, I certify that this action (1) is not a ''significant regulatory action'' under Executive Order 12866; (2) is not a ''significant rule'' under DOT Regulatory Policies and Procedures (44 FR 11034, February 26, 1979); and (3) will not have a significant economic impact, positive or negative, on a substantial number of small entities under the criteria of the Regulatory Flexibility Act. A final evaluation has been prepared for this action and it is contained in the Rules Docket. A copy of it may be obtained from the Rules Docket at the location provided under the caption **ADDRESSES.**

### List of Subjects in 14 CFR Part 39

Air transportation, Aircraft, Aviation safety, Incorporation by reference, Safety.

### Adoption of the Amendment

■ Accordingly, pursuant to the authority delegated to me by the Administrator, the Federal Aviation Administration amends part 39 of the Federal Aviation Regulations (14 CFR part 39) as follows:

## PART 39—AIRWORTHINESS DIRECTIVES

■ 1. The authority citation for part 39 continues to read as follows:

**Authority:** 49 U.S.C. 106(g), 40113, 44701.

### § 39.13 [Amended]

■ 2. Section 39.13 is amended by adding a new airworthiness directive to read as follows:

**2003–22–15 Eurocopter France:** Amendment 39–13363. Docket No. 2003–SW–09–AD.

*Applicability:* Model SA–365N, N1, AS–365N2, and AS 365 N3 helicopters, certificated in any category.

*Compliance:* Within the next 50 hours time-in-service (TIS) or 1 month, whichever occurs first, unless accomplished previously.

To prevent fuel leakage, toxic fumes inside the cabin creating a fire hazard that could lead to a fire and smoke in the cabin, and subsequent loss of control of the helicopter, accomplish the following:

(a) In accordance with the Accomplishment Instructions, paragraph 2.B.2. of Eurocopter Alert Telex No. 28.00.31, dated January 14, 2003 (Alert Telex):

(1) Inspect the fuel air vent hose (air vent hose) on the right-hand (RH) and left-hand (LH) side of the helicopter for chafing and fuel leakage in the interference areas.

(i) Replace any leaking air vent hose before further flight, and

(ii) Modify any non-leaking air vent hose by wrapping it with adhesive tape before further flight.

(2) For any air vent hose with chafing damage, replace the air vent hose at the next 500-hour TIS inspection.

(b) Inspect the length of each attachment screw of the latch support on the RH and LH sides and, if the length exceeds 12 mm, replace the attachment screw in accordance with the Accomplishment Instructions, paragraph 2.B.3. of the Alert Telex.

(c) Install spacers for the air vent hose on the RH side between the attachment screws of the latch support and the air vent hose in accordance with the Accomplishment Instructions, paragraph 2.B.4. of the Alert Telex.

(d) Remove one of the tyrap clamp supports from the LH side that secures the air vent hose to the 9° frame at the latch support in accordance with the Accomplishment Instructions, paragraph 2.B.5. of the Alert Telex.

(e) Install latch supports on the RH and LH sides, and the covering panels on the 9° frame in accordance with the Accomplishment Instructions, paragraph 2.B.6. of the Alert Telex.

(f) Inspect the doors for correct closing, and if necessary, adjust the position of the microswitches (if installed) and the latches in accordance with the Accomplishment Instructions, paragraph 2.B.6. of the Alert Telex.

(g) To request a different method of compliance or a different compliance time for this AD, follow the procedures in 14 CFR 39.19. Send the proposal to the Manager, Safety Management Group, FAA. Contact the Safety Management Group for information about previously approved alternative methods of compliance.

(h) The previously stated actions shall be done in accordance with Eurocopter Alert Telex No. 28.00.31, dated January 14, 2003. The Director of the Federal Register approved this incorporation by reference in accordance with 5 U.S.C. 552(a) and 1 CFR part 51. Copies may be obtained from American Eurocopter Corporation, 2701 Forum Drive, Grand Prairie, Texas 75053–4005, telephone (972) 641–3460, fax (972) 641–3527. Copies may be inspected at the FAA, Office of the Regional Counsel, Southwest Region, 2601 Meacham Blvd., Room 663, Fort Worth, Texas; or at the Office of the Federal Register, 800 North Capitol Street, NW., suite 700, Washington, DC.

(i) This amendment becomes effective on January 5, 2004.

**Note:** The subject of this AD is addressed in Direction Generale De L'Aviation Civile (France) AD 2003–028(A), dated February 5, 2003.

Issued in Fort Worth, Texas, on October 31, 2003.

**Kim Smith,**

*Acting Manager, Rotorcraft Directorate, Aircraft Certification Service.*

[FR Doc. 03–29223 Filed 11–28–03; 8:45 am]

BILLING CODE 4910–13–P

---

## DEPARTMENT OF TRANSPORTATION

## Federal Aviation Administration

## 14 CFR Part 39

**[Docket No. 2003–NM–08–AD; Amendment 39–13374; AD 2003–24–05]**

**RIN 2120–AA64**

## Airworthiness Directives; McDonnell Douglas Model DC–9–31 and DC–9–32 Airplanes

**AGENCY:** Federal Aviation Administration, DOT.

**ACTION:** Final rule; request for comments.

**SUMMARY:** This amendment adopts a new airworthiness directive (AD), applicable to certain McDonnell Douglas Model DC–9–31 and DC–9–32 airplanes. This action requires installation of ceiling panels and a protective pad in the tailcone emergency exit passageway. The actions specified by this AD are intended to prevent people on board the airplane from striking their heads on exposed metal frames in the tailcone area, which could cause injury and delay or impede their evacuation during an emergency. This action is intended to address the identified unsafe condition.

**DATES:** Effective December 16, 2003.

The incorporation by reference of certain publications listed in the regulations is approved by the Director of the Federal Register as of December 16, 2003.

Comments for inclusion in the Rules Docket must be received on or before January 30, 2004.

**ADDRESSES:** Submit comments in triplicate to the Federal Aviation Administration (FAA), Transport Airplane Directorate, ANM–114, Attention: Rules Docket No. 2003–NM–08–AD, 1601 Lind Avenue, SW., Renton, Washington 98055–4056. Comments may be inspected at this location between 9 a.m. and 3 p.m., Monday through Friday, except Federal holidays. Comments may be submitted via fax to (425) 227–1232. Comments may also be sent via the Internet using the following address: *9-anm-iarcomment@faa.gov.* Comments sent via fax or the Internet must contain ''Docket No. 2003–NM–08–AD'' in the subject line and need not be submitted in triplicate. Comments sent via the Internet as attached electronic files must be formatted in Microsoft Word 97 or 2000 or ASCII text.

The service information referenced in this AD may be obtained from Boeing Commercial Aircraft Group, Long Beach Division, 3855 Lakewood Boulevard, Long Beach, California 90846, Attention: Data and Service Management, Dept. C1–L5A (D800–0024). This information may be examined at the FAA, Transport Airplane Directorate, 1601 Lind Avenue, SW., Renton, Washington; or at the FAA, Los Angeles Aircraft Certification Office, 3960 Paramount Boulevard, Lakewood, California; or at the Office of the Federal Register, 800 North Capitol Street, NW., suite 700, Washington, DC.

**FOR FURTHER INFORMATION CONTACT:** Cheyenne Del Carmen, Aerospace Engineer, Systems and Equipment Branch, ANM–130L, FAA, Los Angeles Aircraft Certification Office, 3960 Paramount Boulevard, Lakewood, California 90712; telephone (562) 627–5338; fax (562) 627–5210.

**SUPPLEMENTARY INFORMATION:** On October 17, 1997, the FAA issued AD 97–22–05, amendment 39–10176 (62 FR 55730, October 28, 1997), applicable to certain McDonnell Douglas Model DC–9–14, DC–9–15, DC–9–15F, DC–9–21, DC–9–31, DC–9–32, DC–9–32 (VC–9C), DC–9–32F, DC–9–34, DC–9–34F, DC–9–32F (C–9A, C–9B), DC–9–41, and DC–9–51 airplanes, to require modification of the emergency internal release system of the tailcone and the accessory compartment. That action was prompted by a report that, due to failure of the tailcone release system, the tailcone did not deploy on an airplane during an emergency evacuation. The actions specified by that AD are intended to ensure that the emergency internal release system of the tailcone performs its intended function in the event of an emergency evacuation. The requirements of that AD are also intended to prevent people on board the airplane from striking their heads on exposed metal frames in the tailcone area, which could cause injury and delay or impede their evacuation during an emergency.

## Actions Since Issuance of Previous Rule

Since the issuance of AD 97–22–05, the FAA was advised that two Model DC–9–31 airplanes with manufacturer's fuselage numbers 1039 and 1046, and two Model DC–9–32 airplanes with manufacturer's fuselage numbers 0268 and 0505, were omitted inadvertently from the effectivity Section 1.A. of McDonnell Douglas DC–9 Service Bulletin 25–331, dated December 10, 1993, which is one of the two service bulletins referenced in AD 97–22–05.

Therefore, we have determined that it is necessary that the modification of the tailcone accessory compartment described in Boeing Service Bulletin DC9–25–331 be accomplished to adequately address the identified unsafe condition (*i.e.*, prevent people on board the airplane from striking their heads on exposed metal frames in the tailcone area, which could cause injury and delay or impede their evacuation during an emergency) on these additional airplanes.

## Explanation of Relevant Service Information

The FAA has reviewed and approved Boeing Service Bulletin DC9–25–331, Revision 02, dated December 10, 2002, which describes procedures for modifying the tailcone accessory compartment.

The modification procedures described in this revision are essentially identical to the procedures in the original issue of the service bulletin, which was referenced in AD 97–22–05 as an appropriate source of service information for accomplishing the required modification of the accessory compartment. However, Revision 02 of the service bulletin adds additional airplanes to the effectivity listing that are subject to the identified unsafe condition. Accomplishment of the actions specified in the service bulletin is intended to adequately address the identified unsafe condition.

Accomplishment of the modification of the tailcone accessory compartment specified in AD 97–22–05 is acceptable for compliance with the requirements of this AD.

## Explanation of Requirements of Proposed Rule

Since an unsafe condition has been identified that is likely to exist or develop on other products of this same type design that may be registered in the United States at some time in the future, this AD is being issued to prevent people on board the airplane from striking their heads on exposed metal frames in the tailcone area, which could cause injury and delay or impede their evacuation during an emergency. This AD requires modification of the tailcone accessory compartment. The actions are required to be accomplished in accordance with Boeing Service Bulletin DC9–25–331, Revision 02, dated December 10, 2002.

Since this AD expands the applicability of AD 97–22–05, the FAA has considered a number of factors in determining whether to issue a new AD or to supersede the ''old'' AD. Although the four additional airplanes included in the applicability of this AD were inadvertently omitted from McDonnell Douglas DC–9 Service Bulletin 25–331, dated December 10, 1993, the other service bulletin referenced in AD 97–22–05 included those additional airplanes in the effectivity. The FAA also has considered the entire fleet size that would be affected by superseding AD 97–22–05 and the consequent workload associated with revising maintenance record entries. In light of this, the FAA has determined that a less burdensome approach is to issue a separate AD applicable only to these additional airplanes. This AD would not supersede AD 97–22–05; airplanes listed in the applicability of AD 97–22–05 are required to continue to comply with the requirements of that AD. This AD is a separate AD action, and is applicable only to Boeing Model DC–9–31 airplanes with manufacturer's fuselage numbers 1039 and 1046, and Model DC–9–32 airplanes with manufacturer's fuselage numbers 0268 and 0505; certificated in any category.

## Cost Impact

None of the airplanes affected by this action are on the U.S. Register. All airplanes included in the applicability of this rule currently are operated by non-U.S. operators under foreign registry; therefore, they are not directly affected by this AD action. However, the FAA considers that this rule is necessary to ensure that the unsafe

condition is addressed in the event that any of these subject airplanes are imported and placed on the U.S. Register in the future.

Should an affected airplane be imported and placed on the U.S. Register in the future, it would require approximately 10 work hours per airplane classified as Group 1, and 9 work hours per airplane classified as Group 2, to accomplish the modification of the accessory compartment. The average labor rate is $65 per work hour. Required parts would cost approximately $8,846 for each Group 1 airplane and $12,622 for each Group 2 airplane. Based on these figures, the cost impact of the modification of this AD on for this modification would be approximately $9,496 for Group 1 airplanes, and $13,207 per airplane classified as Group 2.

## Determination of Rule's Effective Date

Since this AD action does not affect any airplane that is currently on the U.S. register, it has no adverse economic impact and imposes no additional burden on any person. Therefore, prior notice and public procedures hereon are unnecessary and the amendment may be made effective in less than 30 days after publication in the **Federal Register**.

## Comments Invited

Although this action is in the form of a final rule and was not preceded by notice and opportunity for public comment, comments are invited on this rule. Interested persons are invited to comment on this rule by submitting such written data, views, or arguments as they may desire. Communications shall identify the Rules Docket number and be submitted in triplicate to the address specified under the caption **ADDRESSES.** All communications received on or before the closing date for comments will be considered, and this rule may be amended in light of the comments received. Factual information that supports the commenter's ideas and suggestions is extremely helpful in evaluating the effectiveness of the AD action and determining whether additional rulemaking action would be needed.

Submit comments using the following format:

- Organize comments issue-by-issue. For example, discuss a request to change the compliance time and a request to change the service bulletin reference as two separate issues.
- For each issue, state what specific change to the AD is being requested.
- Include justification (*e.g.*, reasons or data) for each request.

Comments are specifically invited on the overall regulatory, economic, environmental, and energy aspects of the rule that might suggest a need to modify the rule. All comments submitted will be available, both before and after the closing date for comments, in the Rules Docket for examination by interested persons. A report that summarizes each FAA-public contact concerned with the substance of this AD will be filed in the Rules Docket.

Commenters wishing the FAA to acknowledge receipt of their comments submitted in response to this rule must submit a self-addressed, stamped postcard on which the following statement is made: ''Comments to Docket Number 2003–NM–08–AD.'' The postcard will be date stamped and returned to the commenter.

## Regulatory Impact

The regulations adopted herein will not have a substantial direct effect on the States, on the relationship between the national Government and the States, or on the distribution of power and responsibilities among the various levels of government. Therefore, it is determined that this final rule does not have federalism implications under Executive Order 13132.

For the reasons discussed above, I certify that this action (1) is not a ''significant regulatory action'' under Executive Order 12866; (2) is not a ''significant rule'' under DOT Regulatory Policies and Procedures (44 FR 11034, February 26, 1979); and (3) will not have a significant economic impact, positive or negative, on a substantial number of small entities under the criteria of the Regulatory Flexibility Act. A final evaluation has been prepared for this action and it is contained in the Rules Docket. A copy of it may be obtained from the Rules Docket at the location provided under the caption **ADDRESSES.**

## List of Subjects in 14 CFR Part 39

Air transportation, Aircraft, Aviation safety, Incorporation by reference, Safety.

## Adoption of the Amendment

■ Accordingly, pursuant to the authority delegated to me by the Administrator, the Federal Aviation Administration amends part 39 of the Federal Aviation Regulations (14 CFR part 39) as follows:

## PART 39—AIRWORTHINESS DIRECTIVES

■ 1. The authority citation for part 39 continues to read as follows:

**Authority:** 49 U.S.C. 106(g), 40113, 44701.

### § 39.13 [Amended]

■ 2. Section 39.13 is amended by adding the following new airworthiness directive:

**2003–24–05 McDonnell Douglas:** Amendment 39–13374. Docket 2003–NM–08–AD.

*Applicability:* Model DC–9–31 airplanes having manufacturer's fuselage numbers 1039 and 1046; and Model DC–9–32 airplanes having manufacturer's fuselage numbers 0268 and 0505; certificated in any category.

**Note 1:** The requirements of this AD become applicable at the time an airplane operating in an all-cargo configuration is converted to a passenger or passenger/cargo configuration.

*Compliance:* Required as indicated, unless accomplished previously.

To prevent people on board the airplane from striking their heads on exposed metal frames in the tailcone area, which could cause injury and delay or impede their evacuation during an emergency, accomplish the following:

**Modification of the Tailcone Accessory Compartment**

(a) For airplanes having manufacturer's fuselage numbers 0268, 0505, 1039, and 1046: Within 12 months after the effective date of this AD, modify the tailcone accessory compartment; per the Accomplishment Instructions of Boeing Service Bulletin DC9–25–331, Revision 02, dated December 10, 2002.

(b) Modifications accomplished before the effective date of this AD per McDonnell Douglas DC–9 Service Bulletin 25–331, dated December 10, 1993, are acceptable for compliance with the requirements of paragraph (a) of this AD.

**Credit for Compliance With AD 97–22–05, Amendment 39–10176**

(c) Accomplishment of the modification of the tailcone accessory compartment specified in AD 97–22–05 is acceptable for compliance with the requirements of this AD.

**Alternative Method of Compliance**

(d) In accordance with 14 CFR 39.19, the Manager, Los Angeles Aircraft Certification Office (ACO), FAA, is authorized to approve alternative methods of compliance (AMOCs) for this AD.

**Incorporation by Reference**

(e) The modification shall be done in accordance with Boeing Service Bulletin DC9–25–331, Revision 02, dated December 10, 2002. This incorporation by reference was approved by the Director of the Federal Register in accordance with 5 U.S.C. 552(a) and 1 CFR part 51. Copies may be obtained from Boeing Commercial Aircraft Group, Long Beach Division, 3855 Lakewood Boulevard, Long Beach, California 90846, Attention: Data and Service Management, Dept. C1–L5A (D800–0024). Copies may be inspected at the FAA, Transport Airplane Directorate, 1601 Lind Avenue, SW., Renton, Washington; or at the FAA, Los Angeles ACO, 3960 Paramount Boulevard, Lakewood,

California; or at the Office of the Federal Register, 800 North Capitol Street, NW., suite 700, Washington, DC.

**Effective Date**

(f) This amendment becomes effective on December 16, 2003.

Issued in Renton, Washington, on November 20, 2003.

**Kalene C. Yanamura,**

*Acting Manager, Transport Airplane Directorate, Aircraft Certification Service.*

[FR Doc. 03–29531 Filed 11–28–03; 8:45 am]

**BILLING CODE 4910–13–P**

---

## DEPARTMENT OF TRANSPORTATION

## Federal Aviation Administration

## 14 CFR Part 39

**[Docket No. 2003–NM–140–AD; Amendment 39–13373; AD 2003–24–04]**

**RIN 2120–AA64**

## Airworthiness Directives; Boeing Model 747–400 and –400F Series Airplanes

**AGENCY:** Federal Aviation Administration, DOT.

**ACTION:** Final rule; request for comments.

**SUMMARY:** This amendment adopts a new airworthiness directive (AD), applicable to certain Boeing Model 747–400 and –400F series airplanes. This action requires replacing the rudder feel, centering, and trim mechanism with a new or serviceable rudder feel, centering, and trim mechanism. This action is necessary to prevent degradation/loss of rudder feel and centering, which could result in increased pilot workload and could lead to loss of control of the airplane. This action is intended to address the identified unsafe condition.

**DATES:** Effective December 16, 2003.

The incorporation by reference of Boeing Service Bulletin 747–27–2392, dated February 20, 2003, as listed in the regulations, is approved by the Director of the Federal Register as of December 16, 2003.

Comments for inclusion in the Rules Docket must be received on or before January 30, 2004.

**ADDRESSES:** Submit comments in triplicate to the Federal Aviation Administration (FAA), Transport Airplane Directorate, ANM–114, Attention: Rules Docket No. 2003–NM–140–AD, 1601 Lind Avenue, SW., Renton, Washington 98055–4056. Comments may be inspected at this location between 9 a.m. and 3 p.m., Monday through Friday, except Federal holidays. Comments may be submitted via fax to (425) 227–1232. Comments may also be sent via the Internet using the following address: *9-anm-iarcomment@faa.gov.* Comments sent via fax or the Internet must contain ''Docket No. 2003–NM–140–AD'' in the subject line and need not be submitted in triplicate. Comments sent via the Internet as attached electronic files must be formatted in Microsoft Word 97 for Windows or ASCII text.

The service information referenced in this AD may be obtained from Boeing Commercial Airplane Group, P.O. Box 3707, Seattle, Washington 98124–2207. This information may be examined at the FAA, Transport Airplane Directorate, 1601 Lind Avenue, SW., Renton, Washington; or at the Office of the Federal Register, 800 North Capitol Street, NW., suite 700, Washington, DC.

**FOR FURTHER INFORMATION CONTACT:** Doug Tsuji, Aerospace Engineer, Systems and Equipment Branch, ANM–130S, FAA, Seattle Aircraft Certification Office, 1601 Lind Avenue, SW., Renton, Washington 98055–4056; telephone (425) 917–6487; fax (425) 917–6590.

**SUPPLEMENTARY INFORMATION:** The FAA has received reports from the manufacturer of Boeing Model 747–400 series airplanes, indicating that there have been two cases of shafts in the rudder feel, centering, and trim mechanisms with either elongated holes or extra holes and drill starts. The shafts were found installed on airplanes in the factory. The cause of the discrepancies in the shafts is due to manufacturing and quality deficiencies at the supplier. This condition, if not corrected, could result in degradation/loss of rudder feel and centering, which could result in increased pilot workload and could lead to loss of control of the airplane.

### Explanation of Relevant Service Information

The FAA has reviewed and approved Boeing Service Bulletin 747–27–2392, dated February 20, 2003, which describes procedures for replacing the rudder feel, centering, and trim mechanism with a new or serviceable rudder feel, centering, and trim mechanism. Accomplishment of the actions specified in the service bulletin is intended to adequately address the identified unsafe condition.

### Explanation of Requirements of the Rule

Since an unsafe condition has been identified that is likely to exist or develop on other airplanes of the same type design that may be registered in the United States at some time in the future, this AD is being issued to prevent degradation/loss of rudder feel and centering, which could result in increased pilot workload and could lead to loss of control of the airplane. This AD requires replacing the rudder feel, centering, and trim mechanism with a new or serviceable rudder feel, centering, and trim mechanism. The actions are required to be accomplished in accordance with the service bulletin described previously.

### Cost Impact

None of the Model 747–400 and –400F series airplanes affected by this action are on the U.S. Register. All airplanes included in the applicability of this rule currently are operated by non-U.S. operators under foreign registry; therefore, they are not directly affected by this AD action. However, the FAA considers that this rule is necessary to ensure that the unsafe condition is addressed in the event that any of these subject airplanes are imported and placed on the U.S. Register in the future.

Should an affected airplane be imported and placed on the U.S. Register in the future, it would require approximately 12 work hours to accomplish the required actions, at an average labor rate of $65 per work hour. Required parts would cost $25,537. Based on these figures, the cost impact of this AD would be $26,317 per airplane.

The manufacturer may cover the cost of replacement parts associated with this AD, subject to warranty conditions. Manufacturer warranty remedies may also be available for labor costs associated with this AD. As a result, the costs attributable to the proposed AD may be less than stated above.

### Determination of Rule's Effective Date

Since this AD action does not affect any airplane that is currently on the U.S. register, it has no adverse economic impact and imposes no additional burden on any person. Therefore, prior notice and public procedures hereon are unnecessary and the amendment may be made effective in less than 30 days after publication in the **Federal Register**.

### Comments Invited

Although this action is in the form of a final rule and was not preceded by notice and opportunity for public comment, comments are invited on this rule. Interested persons are invited to comment on this rule by submitting such written data, views, or arguments as they may desire. Communications shall identify the Rules Docket number and be submitted in triplicate to the

address specified under the caption **ADDRESSES.** All communications received on or before the closing date for comments will be considered, and this rule may be amended in light of the comments received. Factual information that supports the commenter's ideas and suggestions is extremely helpful in evaluating the effectiveness of the AD action and determining whether additional rulemaking action would be needed.

Submit comments using the following format:

- Organize comments issue-by-issue. For example, discuss a request to change the compliance time and a request to change the service bulletin reference as two separate issues.
- For each issue, state what specific change to the AD is being requested.
- Include justification (*e.g.*, reasons or data) for each request.

Comments are specifically invited on the overall regulatory, economic, environmental, and energy aspects of the rule that might suggest a need to modify the rule. All comments submitted will be available, both before and after the closing date for comments, in the Rules Docket for examination by interested persons. A report that summarizes each FAA-public contact concerned with the substance of this AD will be filed in the Rules Docket.

Commenters wishing the FAA to acknowledge receipt of their comments submitted in response to this rule must submit a self-addressed, stamped postcard on which the following statement is made: ''Comments to Docket Number 2003–NM–140–AD.'' The postcard will be date stamped and returned to the commenter.

## Regulatory Impact

The regulations adopted herein will not have a substantial direct effect on the States, on the relationship between the national Government and the States, or on the distribution of power and responsibilities among the various levels of government. Therefore, it is determined that this final rule does not have federalism implications under Executive Order 13132.

For the reasons discussed above, I certify that this action (1) is not a ''significant regulatory action'' under Executive Order 12866; (2) is not a ''significant rule'' under DOT Regulatory Policies and Procedures (44 FR 11034, February 26, 1979); and (3) will not have a significant economic impact, positive or negative, on a substantial number of small entities under the criteria of the Regulatory Flexibility Act. A final evaluation has been prepared for this action and it is contained in the Rules Docket. A copy of it may be obtained from the Rules Docket at the location provided under the caption **ADDRESSES.**

## List of Subjects in 14 CFR Part 39

Air transportation, Aircraft, Aviation safety, Incorporation by reference, Safety.

## Adoption of the Amendment

■ Accordingly, pursuant to the authority delegated to me by the Administrator, the Federal Aviation Administration amends part 39 of the Federal Aviation Regulations (14 CFR part 39) as follows:

## PART 39—AIRWORTHINESS DIRECTIVES

1. The authority citation for part 39 continues to read as follows:

**Authority:** 49 U.S.C. 106(g), 40113, 44701.

### § 39.13 [Amended]

■ 2. Section 39.13 is amended by adding the following new airworthiness directive:

**2003–24–04 Boeing:** Amendment 39–13373. Docket 2003–NM–140–AD.

*Applicability:* Model 747–400 and –400F series airplanes, line numbers 1254 through 1293 inclusive, certificated in any category.

*Compliance:* Required as indicated, unless accomplished previously.

To prevent degradation/loss of rudder feel and centering, which could result in increased pilot workload and could lead to loss of control of the airplane, accomplish the following:

**Service Bulletin References**

(a) The term ''service bulletin'' as used in this AD, means the Accomplishment Instructions of Boeing Service Bulletin 747–27–2392, dated February 20, 2003.

**Corrective Actions**

(b) Within 36 months after the effective date of this AD, replace the feel, centering, and trim mechanism with a new or serviceable rudder feel, centering, and trim mechanism per the service bulletin.

**Alternative Methods of Compliance**

(c) In accordance with 14 CFR 39.19, the Manager, Seattle Aircraft Certification Office, FAA, is authorized to approve alternative methods of compliance for this AD.

**Incorporation by Reference**

(d) The actions shall be done in accordance with Boeing Service Bulletin 747–27–2392, dated February 20, 2003. This incorporation by reference was approved by the Director of the Federal Register in accordance with 5 U.S.C. 552(a) and 1 CFR part 51. Copies may be obtained from Boeing Commercial Airplane Group, PO Box 3707, Seattle, Washington 98124–2207. Copies may be inspected at the FAA, Transport Airplane Directorate, 1601 Lind Avenue, SW., Renton, Washington; or at the Office of the Federal Register, 800 North Capitol Street, NW., suite 700, Washington, DC.

**Effective Date**

(e) This amendment becomes effective on December 16, 2003.

Issued in Renton, Washington, on November 20, 2003.

**Vi L. Lipski,**

*Manager, Transport Airplane Directorate, Aircraft Certification Service.*

[FR Doc. 03–29530 Filed 11–28–03; 8:45 am]

BILLING CODE 4910–13–P

---

## DEPARTMENT OF TRANSPORTATION

## Federal Aviation Administration

## 14 CFR Part 39

**[Docket No. 2003–NM–247–AD; Amendment 39–13375; AD 2003–24–06]**

**RIN 2120–AA64**

## Airworthiness Directives; Dassault Model Mystere-Falcon 200 Series Airplanes

**AGENCY:** Federal Aviation Administration, DOT.

**ACTION:** Final rule; request for comments.

**SUMMARY:** This amendment adopts a new airworthiness directive (AD) that is applicable to all Dassault Model Mystere-Falcon 200 series airplanes. This action requires a one-time inspection of the fire extinguishing pipe for each engine to determine whether holes for dispersal of fire-extinguishing agent are present, and corrective action if necessary. This action is necessary to ensure that the flightcrew is able to extinguish an engine fire, should one occur. Inability to extinguish an engine fire could result in loss of control of the airplane. This action is intended to address the identified unsafe condition.

**DATES:** Effective December 1, 2003.

The incorporation by reference of certain publications listed in the regulations is approved by the Director of the Federal Register as of December 1, 2003.

Comments for inclusion in the Rules Docket must be received on or before December 31, 2003.

**ADDRESSES:** Submit comments in triplicate to the Federal Aviation Administration (FAA), Transport Airplane Directorate, ANM–114, Attention: Rules Docket No. 2003–NM–247–AD, 1601 Lind Avenue, SW., Renton, Washington 98055–4056. Comments may be inspected at this location between 9 a.m. and 3 p.m., Monday through Friday, except Federal

holidays. Comments may be submitted via fax to (425) 227–1232. Comments may also be sent via the Internet using the following address: *39-anm-iarcomment@faa.gov.* Comments sent via the Internet must contain ''Docket No. 2003–NM–247–AD'' in the subject line and need not be submitted in triplicate. Comments sent via fax or the Internet as attached electronic files must be formatted in Microsoft Word 97 or 2000 or ASCII text.

The service information referenced in this AD may be obtained from Dassault Falcon Jet, P.O. Box 2000, South Hackensack, New Jersey 07606. This information may be examined at the FAA, Transport Airplane Directorate, 1601 Lind Avenue, SW., Renton, Washington; or at the Office of the Federal Register, 800 North Capitol Street, NW., suite 700, Washington, DC.

**FOR FURTHER INFORMATION CONTACT:** Tom Rodriguez, Aerospace Engineer, International Branch, ANM–116, FAA, Transport Airplane Directorate, 1601 Lind Avenue, SW., Renton, Washington 98055–4056; telephone (425) 227–1137; fax (425) 227–1149.

**SUPPLEMENTARY INFORMATION:** The Direction Generale de l'Aviation Civile (DGAC), which is the airworthiness authority for France, recently notified the FAA that an unsafe condition may exist on all Dassault Model Mystere-Falcon 200 series airplanes. The DGAC advises that, during a maintenance visit, it was discovered that the fire extinguishing pipes for both engines did not have the holes necessary to disperse fire extinguishing agent. This condition, if not corrected, could result in inability to extinguish an engine fire, should one occur, and consequent loss of control of the airplane.

## Explanation of Relevant Service Information

Dassault has issued Alert Service Bulletin F200–A120, Revision 1, dated November 13, 2003. That service bulletin describes procedures for a one-time general visual inspection of the fire extinguishing pipe for each engine to determine whether six holes for dispersal of fire-extinguishing agent are present between the rear coupling and the front attaching lug of the pipe, and corrective action if necessary. If the holes are not present, corrective action includes replacing the fire extinguishing pipe with a new pipe that has the necessary holes, or drilling the necessary holes in the existing pipe. Accomplishment of the action specified in the service bulletin is intended to adequately address the identified unsafe condition. The DGAC classified this service bulletin as mandatory and issued French emergency airworthiness directive F–2003–419(B), dated November 13, 2003, to ensure the continued airworthiness of these airplanes in France.

## FAA's Conclusions

This airplane model is manufactured in France and is type certificated for operation in the United States under the provisions of section 21.29 of the Federal Aviation Regulations (14 CFR 21.29) and the applicable bilateral airworthiness agreement. Pursuant to this bilateral airworthiness agreement, the DGAC has kept the FAA informed of the situation described above. The FAA has examined the findings of the DGAC, reviewed all available information, and determined that AD action is necessary for products of this type design that are certificated for operation in the United States.

## Explanation of Requirements of Rule

Since an unsafe condition has been identified that is likely to exist or develop on other airplanes of the same type design registered in the United States, this AD is being issued to ensure that the flightcrew is able to extinguish an engine fire, should one occur. Inability to extinguish an engine fire could result in loss of control of the airplane. This AD requires a one-time inspection of the fire extinguishing pipe for each engine to determine whether holes for dispersal of fire-extinguishing agent are present, and corrective action if necessary. The actions are required to be accomplished in accordance with the service bulletin described previously, except as discussed below.

## Difference Between AD, Service Bulletin, and French Airworthiness Directive

Operators should note that, although the referenced service bulletin and French emergency airworthiness directive specify that the inspection of the fire extinguishing pipes must be accomplished before further flight, this AD requires that this inspection be accomplished within 10 days after the effective date of this AD. In developing an appropriate compliance time for this AD, we considered not only the manufacturer's and DGAC's recommendation, but the degree of urgency associated with addressing the subject unsafe condition, and the time necessary to perform the inspection. In light of all of these factors, we find a compliance time of 10 days represents an appropriate interval of time for affected airplanes to continue to operate without compromising safety. This issue has been coordinated with the DGAC, and they have no objection.

Operators should note that, although the Accomplishment Instructions of the referenced service bulletin describe procedures for completing a card recording compliance with the service bulletin and submitting it to the manufacturer, this AD does not require those actions.

## Determination of Rule's Effective Date

Since a situation exists that requires the immediate adoption of this regulation, it is found that notice and opportunity for prior public comment hereon are impracticable, and that good cause exists for making this amendment effective in less than 30 days.

## Comments Invited

Although this action is in the form of a final rule that involves requirements affecting flight safety and, thus, was not preceded by notice and an opportunity for public comment, comments are invited on this rule. Interested persons are invited to comment on this rule by submitting such written data, views, or arguments as they may desire. Communications shall identify the Rules Docket number and be submitted in triplicate to the address specified under the caption **ADDRESSES.** All communications received on or before the closing date for comments will be considered, and this rule may be amended in light of the comments received. Factual information that supports the commenter's ideas and suggestions is extremely helpful in evaluating the effectiveness of the AD action and determining whether additional rulemaking action would be needed.

*Submit comments using the following format:*

- Organize comments issue-by-issue. For example, discuss a request to change the compliance time and a request to change the service bulletin reference as two separate issues.
- For each issue, state what specific change to the AD is being requested.
- Include justification (*e.g.*, reasons or data) for each request.

Comments are specifically invited on the overall regulatory, economic, environmental, and energy aspects of the rule that might suggest a need to modify the rule. All comments submitted will be available, both before and after the closing date for comments, in the Rules Docket for examination by interested persons. A report that summarizes each FAA-public contact concerned with the substance of this AD will be filed in the Rules Docket.

Commenters wishing the FAA to acknowledge receipt of their comments submitted in response to this rule must submit a self-addressed, stamped postcard on which the following statement is made: ''Comments to Docket Number 2003–NM–247–AD.'' The postcard will be date stamped and returned to the commenter.

## Regulatory Impact

The regulations adopted herein will not have a substantial direct effect on the States, on the relationship between the national Government and the States, or on the distribution of power and responsibilities among the various levels of government. Therefore, it is determined that this final rule does not have federalism implications under Executive Order 13132.

The FAA has determined that this regulation is an emergency regulation that must be issued immediately to correct an unsafe condition in aircraft, and that it is not a ''significant regulatory action'' under Executive Order 12866. It has been determined further that this action involves an emergency regulation under DOT Regulatory Policies and Procedures (44 FR 11034, February 26, 1979). If it is determined that this emergency regulation otherwise would be significant under DOT Regulatory Policies and Procedures, a final regulatory evaluation will be prepared and placed in the Rules Docket. A copy of it, if filed, may be obtained from the Rules Docket at the location provided under the caption **ADDRESSES.**

## List of Subjects in 14 CFR Part 39

Air transportation, Aircraft, Aviation safety, Incorporation by reference, Safety.

## Adoption of the Amendment

Accordingly, pursuant to the authority delegated to me by the Administrator, the Federal Aviation Administration amends part 39 of the Federal Aviation Regulations (14 CFR part 39) as follows:

## PART 39—AIRWORTHINESS DIRECTIVES

■ 1. The authority citation for part 39 continues to read as follows:

**Authority:** 49 U.S.C. 106(g), 40113, 44701.

### § 39.13 [Amended]

■ 2. Section 39.13 is amended by adding the following new airworthiness directive:

**2003–24–06 Dassault Aviation:** Amendment 39–13375. Docket 2003–NM–247–AD.

*Applicability:* All Model Mystere-Falcon 200 series airplanes, certificated in any category.

*Compliance:* Required as indicated, unless accomplished previously.

To ensure that the flightcrew is able to extinguish an engine fire, should one occur, accomplish the following:

**One-Time Inspection and Corrective Action**

(a) Within 10 days after the effective date of this AD, perform a one-time general visual inspection of the fire extinguishing pipe for each engine to determine whether six holes for dispersal of fire-extinguishing agent are present between the rear coupling and the front attaching lug of the pipe, per the Accomplishment Instructions of Dassault Alert Service Bulletin F200–A120, Revision 1, dated November 13, 2003; except that it is not required to complete the card recording compliance with the service bulletin and return it to the manufacturer.

(1) If all required holes are present on the fire extinguishing pipes for both engines, no further action is required by this paragraph.

(2) For any fire extinguishing pipe missing any or all required holes, before further flight, replace the pipe with a new pipe that has the required holes, or drill the required holes in the existing pipe, per the Accomplishment Instructions of the service bulletin.

**Note 1:** For the purposes of this AD, a general visual inspection is defined as: ''A visual examination of an interior or exterior area, installation, or assembly to detect obvious damage, failure, or irregularity. This level of inspection is made from within touching distance unless otherwise specified. A mirror may be necessary to enhance visual access to all exposed surfaces in the inspection area. This level of inspection is made under normally available lighting conditions such as daylight, hangar lighting, flashlight, or droplight and may require removal or opening of access panels or doors. Stands, ladders, or platforms may be required to gain proximity to the area being checked.''

**Parts Installation**

(b) As of the effective date of this AD, no person may install, on any airplane, a fire extinguishing pipe for an engine unless it has been inspected per paragraph (a) of this AD and found to have all holes required for dispersal of fire-extinguishing agent.

**Alternative Methods of Compliance**

(c) In accordance with 14 CFR 39.19, the Manager, International Branch, ANM–116, Transport Airplane Directorate, FAA, is authorized to approve alternative methods of compliance for this AD.

**Incorporation by Reference**

(d) The actions shall be done in accordance with Dassault Alert Service Bulletin F200–A120, Revision 1, dated November 13, 2003. This incorporation by reference was approved by the Director of the Federal Register in accordance with 5 U.S.C. 552(a) and 1 CFR part 51. Copies may be obtained from Dassault Falcon Jet, P.O. Box 2000, South Hackensack, New Jersey 07606. Copies may be inspected at the FAA, Transport Airplane Directorate, 1601 Lind Avenue, SW., Renton, Washington; or at the Office of the Federal Register, 800 North Capitol Street, NW., suite 700, Washington, DC.

**Note 2:** The subject of this AD is addressed in French emergency airworthiness directive F–2003–419(B), dated November 13, 2003.

**Effective Date**

(e) This amendment becomes effective on December 1, 2003.

Issued in Renton, Washington, on November 20, 2003.

**Kalene C. Yanamura,**

*Acting Manager, Transport Airplane Directorate, Aircraft Certification Service.*

[FR Doc. 03–29570 Filed 11–28–03; 8:45 am]

BILLING CODE 4910–13–P

---

## DEPARTMENT OF TRANSPORTATION

## Federal Aviation Administration

## 14 CFR Part 39

**[Docket No. 2003–NM–249–AD; Amendment 39–13377; AD 2003–24–08]**

**RIN 2120–AA64**

## Airworthiness Directives; Boeing Model 737–100, –200, –200C, –300, –400, and –500 Series Airplanes

**AGENCY:** Federal Aviation Administration, DOT.

**ACTION:** Final rule; request for comments.

**SUMMARY:** This amendment supersedes an existing airworthiness directive (AD), applicable to all Boeing Model 737–100, –200, –200C, –300, –400, and –500 series airplanes, that currently requires repetitive inspections to find cracks, fractures, or corrosion of each carriage spindle of the left and right outboard mid-flaps; and corrective action, if necessary. That AD also provides for an optional action of overhaul or replacement of the carriage spindles. This amendment requires repetitive gap checks of the inboard and outboard carriage of the outboard mid-flaps to detect fractured carriage spindles; and corrective actions, if necessary. This amendment also reduces the interval for the existing inspections and revises the overhaul procedures. The actions specified in this AD are intended to detect and correct cracked, corroded, or fractured carriage spindles and to prevent severe flap asymmetry, which could result in reduced control or loss of controllability of the airplane. This action is intended to address the identified unsafe condition.

**DATES:** Effective December 4, 2003.

The incorporation by reference of Boeing Alert Service Bulletin 737–

57A1277, Revision 1, dated November 25, 2003, as listed in the regulations, is approved by the Director of the Federal Register as of December 4, 2003.

The incorporation by reference of Boeing Alert Service Bulletin 737–57A1277, dated July 25, 2002, as listed in the regulations, was approved previously by the Director of the Federal Register as of November 15, 2002 (67 FR 66316, October 31, 2002).

Comments for inclusion in the Rules Docket must be received on or before January 30, 2004.

**ADDRESSES:** Submit comments in triplicate to the Federal Aviation Administration (FAA), Transport Airplane Directorate, ANM–114, Attention: Rules Docket No. 2003–NM–249–AD, 1601 Lind Avenue, SW., Renton, Washington 98055–4056. Comments may be inspected at this location between 9 a.m. and 3 p.m., Monday through Friday, except Federal holidays. Comments may be submitted via fax to (425) 227–1232. Comments may also be sent via the Internet using the following address: *9-anm-iarcomment@faa.gov.* Comments sent via fax or the Internet must contain ''Docket No. 2003–NM–249–AD'' in the subject line and need not be submitted in triplicate. Comments sent via the Internet as attached electronic files must be formatted in Microsoft Word 97 or 2000 or ASCII text.

The service information referenced in this AD may be obtained from Boeing Commercial Airplanes, P.O. Box 3707, Seattle, Washington 98124–2207. This information may be examined at the FAA, Transport Airplane Directorate, 1601 Lind Avenue, SW., Renton, Washington; or at the Office of the Federal Register, 800 North Capitol Street, NW., suite 700, Washington, DC.

**FOR FURTHER INFORMATION CONTACT:** Robert Hardwick, Aerospace Engineer, Airframe Branch, ANM–120S, FAA, Seattle Aircraft Certification Office, 1601 Lind Avenue, SW., Renton, Washington 98055–4056; telephone (425) 917–6457; fax (425) 917–6590.

**SUPPLEMENTARY INFORMATION:** On October 22, 2002, the FAA issued AD 2002–22–05, amendment 39–12929 (67 FR 66316, October 31, 2002), applicable to all Boeing Model 737–100, –200, –200C, –300, –400, and –500 series airplanes, to require repetitive inspections to find cracks, fractures, or corrosion of each carriage spindle of the left and right outboard mid-flaps; and corrective action, if necessary. That AD also provides for an optional action of overhaul or replacement of the carriage spindles, which would extend the repetitive inspection interval. That action was prompted by reports indicating fractures of the carriage spindles of the outboard mid-flaps. The actions required by that AD are intended to prevent severe flap asymmetry due to fractures of the carriage spindles on an outboard mid-flap, which could result in reduced control or loss of controllability of the airplane.

## Actions Since Issuance of Previous Rule

Since the issuance of that AD, the FAA has received a report indicating that the inboard and outboard carriage spindles (number 7 and 8 carriage spindles) fractured on the right outboard flap on a Boeing Model 737–200 series airplane during approach to landing. The flight crew reported a loud bang approximately 500 feet above ground level (AGL) followed by the airplane rolling off hard to the right. Significant aileron and rudder inputs were required to maintain level flight. The fractures resulted from stress-corrosion cracking.

Investigation revealed that the fractured carriage spindles had been ultrasonically inspected per AD 2002–22–05 three weeks before the reported incident. Corrosion on the fractured face of the inboard carriage spindle indicated that it had failed on some flight previous to the failure of the outboard carriage spindle, which had almost no corrosion on the fractured surface. The outboard carriage spindle failed when the flaps were deployed to detent 40 and at an altitude of 500 feet AGL.

If both the inboard and outboard carriage spindles fracture in the critical section on an outboard flap when the mid-flaps are deployed beyond detent 15, it could result in loss of controllability of the airplane.

The carriage spindles on all Model 737–100, –200C, –300, –400, and –500 series airplanes are similar to those on the affected Model 737–200 series airplanes. Therefore, all of these models may be subject to the same unsafe condition.

## Other Relevant Rulemaking

The FAA has previously issued a supplemental notice of proposed rulemaking (NPRM) Docket 2002–NM–219–AD (68 FR 62409, November 4, 2003), applicable to all Boeing Model 737–100, –200, –200C, –300, –400, and –500 series airplanes. That action would supersede AD 2002–22–05 to require repetitive inspections to find cracks, fractures, or corrosion of each carriage spindle of the left and right outboard mid-flaps; and corrective action, if necessary. That action also would mandate the previously optional overhaul or replacement of the carriage spindles, which would end the repetitive inspections required by the existing AD. The comment period for that action closes on December 1, 2003.

This AD affects the proposed requirements of that supplemental NPRM. We plan to address any effects of this AD on those proposed requirements in future rulemaking.

## Explanation of Relevant Service Information

The FAA has reviewed and approved Boeing Alert Service Bulletin 737–57A1277, Revision 1, dated November 25, 2003, which describes the following procedures:

- Performing repetitive nondestructive test (NDT) inspections and general visual inspections for each carriage spindle of the left and right outboard mid-flaps to detect cracks, corrosion, or severed carriage spindles; and applicable corrective actions, if necessary. The corrective actions include removing the carriage spindle and installing a new or serviceable carriage spindle.
- Performing repetitive gap checks of the inboard and outboard carriage of the left and right outboard mid-flaps to determine if there is a positive indication of a severed carriage spindle; and corrective actions, if necessary. The corrective actions include removing the carriage spindle and installing a new or serviceable carriage spindle.

The service bulletin also describes procedures for determining whether carriage spindles that are removed can be overhauled, and if so, references appropriate overhaul procedures.

This service bulletin recommends compliance times at the following approximate intervals, depending on the flight cycles or years in service of the carriage spindle:

1. For the gap check, ranging from daily to 15 days; and
2. For the NDT and general visual inspections, ranging from 6 days to 180 days.

## Explanation of Requirements of Rule

Since an unsafe condition has been identified that is likely to exist or develop on other airplanes of this same type design, this AD supersedes AD 2002–22–05 to continue to require repetitive inspections to find cracks, fractures, or corrosion of each carriage spindle of the left and right outboard mid-flaps; and corrective action, if necessary. This AD also requires accomplishment of the actions specified in the Boeing Alert Service Bulletin 737–57A1277 described previously, except as described below.

**Differences Between This AD and Referenced Service Bulletin**

Operators should note that, for the optional overhaul procedures specified in the service bulletin, this AD imposes additional requirements to prevent improper nickel plating and hydrogen embrittlement. Boeing will add these procedures in the next revision of the overhaul manual.

Operators should also note that, although the Accomplishment Instructions of the Boeing Alert Service Bulletin 737–57A1277 describe procedures for reporting inspection findings to the manufacturer, this AD does not require that action. We do not need this information from operators.

**Interim Action**

We consider this AD interim action. We are currently considering requiring overhaul of the carriage spindles of the left and right outboard mid-flaps, which will allow for deferral of the repetitive inspections and gap checks required by this AD for some period of time. However, the planned compliance time for the overhaul would allow enough time to provide notice and opportunity for prior public comment on the merits of the overhaul.

**Determination of Rule's Effective Date**

Since a situation exists that requires the immediate adoption of this regulation, it is found that notice and opportunity for prior public comment hereon are impracticable, and that good cause exists for making this amendment effective in less than 30 days.

**Comments Invited**

Although this action is in the form of a final rule that involves requirements affecting flight safety and, thus, was not preceded by notice and an opportunity for public comment, comments are invited on this rule. Interested persons are invited to comment on this rule by submitting such written data, views, or arguments as they may desire. Communications shall identify the Rules Docket number and be submitted in triplicate to the address specified under the caption **ADDRESSES**. All communications received on or before the closing date for comments will be considered, and this rule may be amended in light of the comments received. Factual information that supports the commenter's ideas and suggestions is extremely helpful in evaluating the effectiveness of the AD action and determining whether additional rulemaking action would be needed.

*Submit comments using the following format:*

- Organize comments issue-by-issue. For example, discuss a request to change the compliance time and a request to change the service bulletin reference as two separate issues.
- For each issue, state what specific change to the AD is being requested.
- Include justification (*e.g.*, reasons or data) for each request.

Comments are specifically invited on the overall regulatory, economic, environmental, and energy aspects of the rule that might suggest a need to modify the rule. All comments submitted will be available, both before and after the closing date for comments, in the Rules Docket for examination by interested persons. A report that summarizes each FAA-public contact concerned with the substance of this AD will be filed in the Rules Docket.

Commenters wishing the FAA to acknowledge receipt of their comments submitted in response to this rule must submit a self-addressed, stamped postcard on which the following statement is made: ''Comments to Docket Number 2003–NM–249–AD.'' The postcard will be date stamped and returned to the commenter.

**Regulatory Impact**

The regulations adopted herein will not have a substantial direct effect on the States, on the relationship between the national Government and the States, or on the distribution of power and responsibilities among the various levels of government. Therefore, it is determined that this final rule does not have federalism implications under Executive Order 13132.

The FAA has determined that this regulation is an emergency regulation that must be issued immediately to correct an unsafe condition in aircraft, and that it is not a ''significant regulatory action'' under Executive Order 12866. It has been determined further that this action involves an emergency regulation under DOT Regulatory Policies and Procedures (44 FR 11034, February 26, 1979). If it is determined that this emergency regulation otherwise would be significant under DOT Regulatory Policies and Procedures, a final regulatory evaluation will be prepared and placed in the Rules Docket. A copy of it, if filed, may be obtained from the Rules Docket at the location provided under the caption **ADDRESSES**.

**List of Subjects in 14 CFR Part 39**

Air transportation, Aircraft, Aviation safety, Incorporation by reference, Safety.

**Adoption of the Amendment**

■ Accordingly, pursuant to the authority delegated to me by the Administrator, the Federal Aviation Administration amends part 39 of the Federal Aviation Regulations (14 CFR part 39) as follows:

## PART 39—AIRWORTHINESS DIRECTIVES

■ 1. The authority citation for part 39 continues to read as follows:

**Authority:** 49 U.S.C. 106(g), 40113, 44701.

**§ 39.13 [Amended]**

■ 2. Section 39.13 is amended by removing amendment 39–12929 (67 FR 66316, October 31, 2002), and by adding a new airworthiness directive (AD), amendment 39–13377, to read as follows:

**2003–24–08 Boeing:** Amendment 39–13377. Docket 2003–NM–249–AD. Supersedes AD 2002–22–05, Amendment 39–12929.

*Applicability:* All Model 737–100, –200, –200C, –300, –400, and –500 series airplanes; certificated in any category.

*Compliance:* Required as indicated, unless accomplished previously.

To detect and correct cracked, corroded, or fractured carriage spindles and to prevent severe flap asymmetry, which could result in reduced control or loss of controllability of the airplane, accomplish the following:

**Requirements of AD 2002–22–05, Amendment 39–12929**

*Repetitive Inspections*

(a) Do general visual and nondestructive test (NDT) inspections of each carriage spindle (two on each flap) of the left and right outboard mid-flaps to find cracks, fractures, or corrosion at the later of the times specified in paragraphs (a)(1) and (a)(2) of this AD, as applicable, per the Work Instructions of Boeing Alert Service Bulletin 737–57A1277, dated July 25, 2002. Repeat the inspection at least every 180 days until paragraph (d) or (f) of this AD is done.

(1) Before the accumulation of 12,000 total flight cycles or 8 years in-service on new or overhauled carriage spindles, whichever is first.

(2) Within 90 days after November 15, 2002 (the effective date of AD 2002–22–05).

**Note 1:** For the purposes of this AD, a general visual inspection is defined as: ''A visual examination of an interior or exterior area, installation, or assembly to detect obvious damage, failure, or irregularity. This level of inspection is made from within touching distance unless otherwise specified. A mirror may be necessary to enhance visual access to all exposed surfaces in the inspection area. This level of inspection is made under normally available lighting conditions such as daylight, hangar lighting, flashlight, or droplight and may require removal or opening of access panels or doors. Stands, ladders, or platforms may be required to gain proximity to the area being checked.''

*Corrective Action*

(b) If any crack, fracture, or corrosion is found during any inspection required by paragraph (a) of this AD: Before further flight, do the applicable actions for that spindle as specified in paragraph (b)(1) or (b)(2) of this AD, per the Work Instructions of Boeing Alert Service Bulletin 737–57A1277, dated July 25, 2002. Then repeat the inspections required by paragraph (a) of this AD every 12,000 flight cycles or 8 years, whichever is first; on the overhauled or replaced spindle only until paragraph (d) or (f) of this AD is done.

(1) If any corrosion is found in the carriage spindle, overhaul the spindle.

(2) If any crack or fracture is found in the carriage spindle, replace with a new or overhauled carriage spindle.

**New Actions Required by This AD**

*Compliance Times for New Actions*

(c) The tables in paragraph 1.E., ''Compliance'' of Boeing Alert Service Bulletin 737–57A1277, Revision 1, dated November 25, 2003, specify the compliance times for this AD. For carriage spindles that have accumulated the number of flight cycles or years in service specified in the ''Threshold'' column of the tables, accomplish the gap check and NDT and general visual inspections specified in paragraphs (d) and (f) of this AD within the corresponding interval after the effective date of this AD, as specified in the ''Interval'' column. Repeat the gap check and NDT and general visual inspections at the same intervals, except:

(1) The gap check does not have to be done at the same time as an NDT inspection; after doing an NDT inspection, the interval for doing the next gap check can be measured from the NDT inspection; and

(2) As carriage spindles gain flight cycles or years in service and move from one category in the ''Threshold'' column to another, they are subject to the repetitive inspection intervals corresponding to the new threshold category.

*Work Package 2: Gap Check*

(d) Perform a gap check of the inboard and outboard carriage of the left and right outboard mid-flaps to determine if there is a positive indication of a severed carriage spindle, in accordance with Work Package 2 of paragraph 3.B., ''Work Instructions'' of Boeing Alert Service Bulletin 737–57A1277, Revision 1, dated November 25, 2003. Accomplishment of the gap check terminates the repetitive inspection requirements of paragraphs (a) and (b) of this AD.

*Work Package 2: Corrective Actions*

(e) If there is a positive indication of a severed carriage spindle during the gap check required by paragraph (d) of this AD, before further flight, remove the carriage spindle and install a new or serviceable carriage spindle in accordance with Work Package 2 of paragraph 3.B., ''Work Instructions'' of Boeing Alert Service Bulletin 737–57A1277, Revision 1, dated November 25, 2003. If, as a result of the detailed inspection described in paragraph 4.b. of Work Package 2 of the service bulletin, a carriage spindle is found not to be severed and no corrosion or crack is present, it can be reinstalled on the mid-flap per the service bulletin.

*Work Package 1: Inspections*

(f) Perform a NDT inspection and general visual inspection for each carriage spindle of the left and right outboard mid-flaps to detect cracks, corrosion, or severed carriage spindles, in accordance with Work Package 1 of paragraph 3.B., ''Work Instructions'' of Boeing Alert Service Bulletin 737–57A1277, Revision 1, dated November 25, 2003. Accomplishment of these inspections terminates the repetitive inspection requirements of paragraphs (a) and (b) of this AD.

*Work Package 1: Corrective Actions*

(g) If any corroded, cracked, or severed carriage spindle is found during any inspection required by paragraph (f) of this AD, before further flight, remove the carriage spindle and install a new or serviceable carriage spindle in accordance with Work Package 1 of paragraph 3.B., ''Work Instructions'' of Boeing Alert Service Bulletin 737–57A1277, Revision 1, dated November 25, 2003.

*Parts Installation*

(h) Except as provided in paragraph (e) of this AD: As of the effective date of this AD, no person may install on any airplane a carriage spindle that has been removed as required by paragraph (e) or (g) of this AD, unless it has been overhauled per paragraph 3.B., ''Work Instructions'' of Boeing Alert Service Bulletin 737–57A1277, Revision 1, dated November 25, 2003; except that, to be eligible for installation under this paragraph, the carriage spindle must have been overhauled per the requirements of paragraph (i) of this AD.

(i) During accomplishment of any overhaul specified in paragraph (h) of this AD, use the procedures specified in paragraphs (i)(1) and (i)(2) of this AD during application of the nickel plating to the carriage spindle in addition to those specified in Boeing 737 Standard Overhaul Practices Manual, Chapter 20–42–09.

(1) The maximum deposition rate of the nickel plating in any one plating/baking cycle must not exceed 0.002-inches-per-hour.

(2) Begin the hydrogen embrittlement relief bake within 10 hours after application of the plating, or less than 24 hours after the current was first applied to the part, whichever is first.

*Exception to Reporting Recommendations in Service Bulletins*

(j) Although the service bulletins recommend that operators report inspection findings to the manufacturer, this AD does not contain such a reporting requirement.

*Alternative Methods of Compliance*

(k)(1) In accordance with 14 CFR 39.19, the Manager, Seattle Aircraft Certification Office (ACO), FAA, is authorized to approve alternative methods of compliance (AMOCs) for this AD.

(2) Alternative methods of compliance, approved previously per AD 2002–22–05, amendment 39–12929, are approved as alternative methods of compliance for paragraphs (a) and (b) of this AD.

(3) An AMOC that provides an acceptable level of safety may be used for any repair required by this AD, if it is approved by a Boeing Company Designated Engineering Representative who has been authorized by the Manager, Seattle ACO, to make such findings.

**Incorporation by Reference**

(l) Unless otherwise specified in this AD, the actions shall be done in accordance with Boeing Alert Service Bulletin 737–57A1277, dated July 25, 2002; and Boeing Alert Service Bulletin 737–57A1277, Revision 1, dated November 25, 2003.

(1) The incorporation by reference of Boeing Alert Service Bulletin 737–57A1277, Revision 1, dated November 25, 2003, is approved by the Director of the Federal Register, in accordance with 5 U.S.C. 552(a) and 1 CFR part 51.

(2) The incorporation by reference of Boeing Alert Service Bulletin 737–57A1277, dated July 25, 2002, was approved previously by the Director of the Federal Register as of November 15, 2002 (67 FR 66316, October 31, 2002).

(3) Copies may be obtained from Boeing Commercial Airplanes, P.O. Box 3707, Seattle, Washington 98124–2207. Copies may be inspected at the FAA, Transport Airplane Directorate, 1601 Lind Avenue, SW., Renton, Washington; or at the Office of the Federal Register, 800 North Capitol Street, NW., suite 700, Washington, DC.

**Effective Date**

(m) This amendment becomes effective on December 4, 2003.

Issued in Renton, Washington, on November 24, 2003.

**Ali Bahrami,**

*Acting Manager, Transport Airplane Directorate, Aircraft Certification Service.*

[FR Doc. 03–29784 Filed 11–25–03; 11:56 am]

BILLING CODE 4910–13–P

## DEPARTMENT OF COMMERCE

## Bureau of Industry and Security

## 15 CFR Parts 742 and 774

**[Docket No. 030806193–3193–01]**

**RIN 0694–AC88**

## Revisions and Clarifications to the Export Administration Regulations—Chemical and Biological Weapons Controls: Australia Group; Chemical Weapons Convention; Correction

**AGENCY:** Bureau of Industry and Security, Commerce.

**ACTION:** Final rule; correction.

**SUMMARY:** On Tuesday, June 10, 2003, the Bureau of Industry and Security (BIS) published a final rule that

amended the Export Administration Regulations (EAR) to implement the understandings reached at the June 2002 plenary meeting of the Australia Group (AG). The June 10, 2003, final rule contained errors in the List of Items Controlled for Export Control Classification Numbers (ECCNs) 2E001 and 2E002 on the Commerce Control List (CCL), as well as an error in the licensing policy provisions of the EAR that apply to items identified on the AG lists. This document corrects those errors.

**DATES:** This correction is effective December 1, 2003.

**FOR FURTHER INFORMATION CONTACT:** James Seevaratnam, Office of Nonproliferation Controls and Treaty Compliance, Bureau of Industry and Security, Telephone: (202) 482–3343.

**SUPPLEMENTARY INFORMATION:** This document corrects the errors contained in the final rule that was published by the Bureau of Industry and Security (BIS) on June 10, 2003 (68 FR 34526). The June 10, 2003, final rule amended the Export Administration Regulations (EAR) (15 CFR Parts 730–799) to implement the understandings reached at the June 2002 plenary meeting of the Australia Group (AG).

Specifically, this document corrects a minor typographical error contained in § 742.2(b)(1) of the EAR, which describes the licensing policies that apply to items identified on the AG lists. In the first sentence of § 742.2(b)(1), the phrase ''use of chemical of biological weapons'' is corrected to read ''use of chemical or biological weapons.''

This document also corrects the errors contained in Export Control Classification Numbers (ECCNs) 2E001 and 2E002 on the Commerce Control List (CCL) (Supplement No. 1 to Part 774 of the EAR). In the heading of ECCN 2E001, the first parenthetical phrase ''(except 2A991, 2A993, or 2A994)'' is corrected to read ''(except 2A983, 2A991, or 2A994)'' and the third parenthetical phrase ''(except 2D991, 2D992, or 2D994)'' is corrected to read ''(except 2D983, 2D991, 2D992, or 2D994)''. In the heading of ECCN 2E002, the first parenthetical phrase ''(except 2A991, 2A993, or 2A994)'' is corrected to read ''(except 2A983, 2A991, or 2A994)''. The corrections to the headings of ECCNs 2E001 and 2E002 are being made, because the June 10, 2003, final rule inadvertently referenced one ECCN (*i.e.,* ECCN 2A993) that had been removed from the CCL by a previous rule and did not reference two other ECCNs (*i.e.,* ECCNs 2A983 and 2D983) that were added to the CCL by that same rule. The rule that removed ECCN 2A993 and added new ECCNs 2A983 and 2D983 amended the EAR to expand controls on explosives detection equipment and related software and technology and was published by BIS on April 3, 2003 (68 FR 16208).

In addition, this document corrects errors made by the June 10, 2003, final rule in the missile technology (MT) controls paragraphs under the License Requirements sections of ECCNs 2E001 and 2E002. In the MT controls paragraph for ECCN 2E001, the phrase ''2B117, 2D001 or 2D101 for MT reasons'' is corrected to read ''2B117, 2B119 to 2B122, 2D001, or 2D101 for MT reasons''. In the MT controls paragraph for ECCN 2E002, the phrase ''2B116 or 2B117 for MT reasons'' is corrected to read ''2B116, 2B117, or 2B119 to 2B122 for MT reasons''. The corrections to these MT controls paragraphs are being made, because the June 10, 2003, final rule inadvertently omitted references to four new ECCNs (*i.e.,* ECCNs 2B119, 2B120, 2B121, and 2B122) that were added to the CCL by a previous rule. The rule that added these four new ECCNs to the CCL amended the EAR to conform the CCL with the reformatted Missile Technology Control Regime (MTCR) Annex of October 14, 1999, and was published by BIS on April 2, 2003 (68 FR 16144).

**Rulemaking Requirements**

1. This rule has been determined to be not significant for purposes of Executive Order 12866.

2. Notwithstanding any other provision of law, no person is required to respond to, nor shall any person be subject to a penalty for failure to comply with, a collection of information subject to the requirements of the Paperwork Reduction Act, unless that collection of information displays a currently valid OMB Control Number. This rule contains collections of information subject to the requirements of the Paperwork Reduction Act of 1980 (44 U.S.C. 3501 *et seq.*). These collections have been approved by the Office of Management and Budget under Control Numbers 0694–0088 and 0694–0117.

3. This rule does not contain policies with Federalism implications as that term is defined in Executive Order 13132.

4. The provisions of the Administrative Procedure Act (5 U.S.C. 553) requiring notice of proposed rulemaking, the opportunity for public participation, and a delay in effective date, are inapplicable because this regulation involves a military and foreign affairs function of the United States (Sec. 5 U.S.C. 553(a)(1)). Further, no other law requires that a notice of proposed rulemaking and an opportunity for public comment be given for this final rule. Because a notice of proposed rulemaking and an opportunity for public comment are not required to be given for this rule under 5 U.S.C. 553 or by any other law, the analytical requirements of the Regulatory Flexibility Act (5 U.S.C. 601 *et seq.*) are not applicable.

Therefore, this regulation is issued in final form. Although there is no formal comment period, public comments on this regulation are welcome on a continuing basis. Comments should be submitted to Willard Fisher, Regulatory Policy Division, Bureau of Industry and Security, U.S. Department of Commerce, Room 2705, 14th Street and Pennsylvania Avenue, NW., Washington, DC 20230.

■ Accordingly, in the final rule, FR Doc. 03–14602, published at 68 FR 34526, make the following corrections:

## PART 742—[CORRECTED]

**§ 742.2 [Corrected]**

■ 1. On page 34529, first column, in § 742.2(b)(1), line 9, at the end of the first sentence, the phrase ''use of chemical of biological weapons'' is corrected to read ''use of chemical or biological weapons''.

## PART 774—[CORRECTED]

**Supplement No. 1 to Part 774—[Corrected]**

■ 2. On page 34532, third column, in ECCN 2E001, the ECCN heading and the MT controls paragraph in the chart of the License Requirements section of the ECCN are corrected to read as follows:

**2E001 ''Technology according to the General Technology Note for the ''development'' of equipment or ''software'' controlled by 2A (except 2A983, 2A991, or 2A994), 2B (except 2B991, 2B993, 2B996 2B997 or 2B998), or 2D (except 2D983, 2D991, 2D992, or 2D994).**

**License Requirements**

* * * * *

| *Control(s)* | *Country Chart* |
|---|---|
| * * * | * * |
| MT applies to ''technology'' for items controlled by 2B004, 2B009, 2B018, 2B104, 2B105, 2B109, 2B116, 2B117, 2B119 to 2B122, 2D001 or 2D101 for MT reasons. | MT Column 1 |

| Control(s) | Country Chart |
|---|---|
| * * * * * | |

■ 3. On page 34533, first column, in ECCN 2E002, the ECCN heading and the MT controls paragraph in the chart of the License Requirements section of the ECCN are corrected to read as follows:

**2E002 ''Technology'' according to the General Technology Note for the ''production'' of equipment controlled by 2A (except 2A983, 2A991, or 2A994) or 2B (except 2B991, 2B993, 2B996, 2B997, or 2B998).**

**License Requirements**

* * * * *

| Control(s) | Country Chart |
|---|---|
| * * * * * | |
| MT applies to ''technology'' for equipment controlled by 2B004, 2B009, 2B018, 2B104, 2B105, 2B109, 2B116, 2B117, or 2B119 to 2B122 for MT reasons. | MT Column 1 |
| * * * * * | |

Dated: September 4, 2003.

**Eileen M. Albanese,**

*Director, Office of Exporter Services, Export Administration.*

[FR Doc. 03–29835 Filed 11–28–03; 8:45 am]

BILLING CODE 3510–33–P

## DEPARTMENT OF STATE

## 22 CFR Part 126

**[Public Notice 4546]**

## Amendment to the International Traffic in Arms Regulations; Correction

November 25, 2003.

**ACTION:** Correction of final rule.

**SUMMARY:** This document makes a correction to the final rule published on November 21, 2003 (*68 FR 65633*). The regulation made changes to the prohibited exports and sales to certain countries at 22 CFR 126.1.

**EFFECTIVE DATE:** November 21, 2003.

**FOR FURTHER INFORMATION CONTACT:** Mary Sweeney, Office of Defense Trade Controls Management, Bureau of Political-Military Affairs, Department of State (202) 663–2700.

**SUPPLEMENTARY INFORMATION:** The Department of State published a final rule (Public Notice 4538) in the **Federal Register** of November 21, 2003, amending § 126.1 of the International Traffic in Arms Regulations.

In rule FR Doc. 03–29158 published on November 21, 2003 (68 FR 65633), make the following corrections.

1. On page 65633, third column, **DATES**: November 21, 2003. Comments will be accepted at any time.'' should read ''**EFFECTIVE DATE**: November 21, 2003.''

2. On page 65633, third column, ''**ADDRESSES**: Interested parties are invited to submit written comments to the Department of State, Directorate of Defense Trade Controls, Office of Defense Trade Controls Management, ATTN: Regulatory Change, Angola and Iraq, 12th Floor, SA–1, Washington, DC 20522–0112.'' should read **ADDRESSES:** Interested parties are invited to submit written comments to the Department of State, Directorate of Defense Trade Controls, Office of Defense Trade Controls Management, ATTN: Regulatory Change, Angola and Iraq, 12th Floor, SA–1, Washington, DC 20522–0112. Comments will be accepted at any time.''

Dated: November 25, 2003.

**Holly West-Owen,**

*Federal Register Liaison, Department of State.*

[FR Doc. 03–29818 Filed 11–28–03; 8:45 am]

BILLING CODE 4710–25–P

## PENSION BENEFIT GUARANTY CORPORATION

## 29 CFR Parts 4011 and 4022

## Disclosure to Participants; Benefits Payable in Terminated Single-employer Plans

**AGENCY:** Pension Benefit Guaranty Corporation.

**ACTION:** Final rule.

**SUMMARY:** This rule amends appendix D to the Pension Benefit Guaranty Corporation's regulation on Benefits Payable in Terminated Single-Employer Plans by adding the maximum guaranteeable pension benefit that may be paid by the PBGC with respect to a plan participant in a single-employer pension plan that terminates in 2004. This rule also amends the PBGC's regulation on Disclosure to Participants by adding information on 2004 maximum guaranteed benefit amounts to Appendix B. The amendment is necessary because the maximum guarantee amount changes each year, based on changes in the contribution and benefit base under section 230 of the Social Security Act. The effect of the amendment is to advise plan participants and beneficiaries of the increased maximum guarantee amount for 2004.

**EFFECTIVE DATE:** January 1, 2004.

**FOR FURTHER INFORMATION CONTACT:** Harold J. Ashner, Assistant General Counsel, Office of the General Counsel, Pension Benefit Guaranty Corporation, 1200 K Street, NW., Washington, DC 20005–4026; 202–326–4024. (TTY/TDD users may call the Federal relay service toll-free at 1–800–877–8339 and ask to be connected to 202–326–4024.)

**SUPPLEMENTARY INFORMATION:** Section 4022(b) of the Employee Retirement Income Security Act of 1974 provides for certain limitations on benefits guaranteed by the PBGC in terminating single-employer pension plans covered under Title IV of ERISA. One of the limitations, set forth in section 4022(b)(3)(B), is a dollar ceiling on the amount of the monthly benefit that may be paid to a plan participant (in the form of a life annuity beginning at age 65) by the PBGC. The ceiling is equal to ''$750 multiplied by a fraction, the numerator of which is the contribution and benefit base (determined under section 230 of the Social Security Act) in effect at the time the plan terminates and the denominator of which is such contribution and benefit base in effect in calendar year 1974 [$13,200].'' This formula is also set forth in § 4022.22(b) of the PBGC's regulation on Benefits Payable in Terminated Single-Employer Plans (29 CFR part 4022). Appendix D to part 4022 lists, for each year beginning with 1974, the maximum guaranteeable benefit payable by the PBGC to participants in single-employer plans that have terminated in that year.

Section 230(d) of the Social Security Act (42 U.S.C. 430(d)) provides special rules for determining the contribution and benefit base for purposes of ERISA section 4022(b)(3)(B). Each year the Social Security Administration determines, and notifies the PBGC of, the contribution and benefit base to be used by the PBGC under these provisions, and the PBGC publishes an amendment to appendix D to part 4022 to add the guarantee limit for the coming year.

The PBGC has been notified by the Social Security Administration that, under section 230 of the Social Security Act, $65,100 is the contribution and benefit base that is to be used to calculate the PBGC maximum guaranteeable benefit for 2004. Accordingly, the formula under section 4022(b)(3)(B) of ERISA and 29 CFR 4022.22(b) is: $750 multiplied by $65,100/$13,200. Thus, the maximum monthly benefit guaranteeable by the PBGC in 2004 is $3,698.86 per month in

the form of a life annuity beginning at age 65. This amendment updates Appendix D to Part 4022 to add this maximum guaranteeable amount for plans that terminate in 2004. (If a benefit is payable in a different form or begins at a different age, the maximum guaranteeable amount is the actuarial equivalent of $3,698.86 per month.)

Section 4011 of ERISA requires plan administrators of certain underfunded plans to provide notice to plan participants and beneficiaries of the plan's funding status and the limits of the PBGC's guarantee. The PBGC's regulation on Disclosure to Participants (29 CFR part 4011) implements the statutory notice requirement. This rule amends Appendix B to the regulation on Disclosure to Participants by adding information on 2004 maximum guaranteed benefit amounts. Plan administrators may, subject to the requirements of that regulation, include this information in participant notices.

General notice of proposed rulemaking is unnecessary. The maximum guaranteeable benefit is determined according to the formula in section 4022(b)(3)(B) of ERISA, and these amendments make no change in its method of calculation but simply list 2004 maximum guaranteeable benefit amounts for the information of the public.

The PBGC has determined that this action is not a ''significant regulatory action'' under the criteria set forth in Executive Order 12866.

Because no general notice of proposed rulemaking is required for this regulation, the Regulatory Flexibility Act of 1980 does not apply (5 U.S.C. 601(2)).

**List of Subjects**

*29 CFR Part 4011*

Employee benefit plans.
Pension insurance, Reporting and recordkeeping requirements.

*29 CFR Part 4022*

Pension insurance, Pensions, Reporting and recordkeeping requirements.

■ In consideration of the foregoing, 29 CFR parts 4011 and 4022 are amended as follows:

## PART 4011—DISCLOSURE TO PARTICIPANTS

■ 1. The authority citation for part 4011 continues to read as follows:

**Authority:** 29 U.S.C. 1302(b)(3), 1311.

■ 2. Appendix B to part 4011 is amended by adding a new entry in numerical order to the table to read as follows.

APPENDIX B TO PART 4011.—TABLE OF MAXIMUM GUARANTEED BENEFITS

| If a plan terminates in— | The maximum guaranteed benefit for an individual starting to receive benefits at the age listed below is the amount (monthly or annual) listed below: | | | | | | | |
|---|---|---|---|---|---|---|---|---|
| | Age 65 | | Age 62 | | Age 60 | | Age 55 | |
| | Monthly | Annual | Monthly | Annual | Monthly | Annual | Monthly | Annual |
| * | * | * | * | | * | * | | * |
| 2004 | $3,698.86 | $44,386.32 | $2,922.10 | $35,065.20 | $2,404.26 | $28,851.12 | $1,664.49 | $19,973.88 |

* * * * *

## PART 4022—BENEFITS PAYABLE IN TERMINATED SINGLE-EMPLOYER PLANS

■ 3. The authority citation for Part 4022 continues to read as follows:

**Authority:** 29 U.S.C. 1302, 1322, 1322b, 1341(c)(3)(D), and 1344.

■ 4. Appendix D to part 4022 is amended by adding a new entry to the table to read as follows. The introductory text is reproduced for the convenience of the reader and remains unchanged.

### Appendix D to Part 4022.—Maximum Guaranteeable Monthly Benefit

The following table lists by year the maximum guaranteeable monthly benefit payable in the form of a life annuity commencing at age 65 as described by § 4022.22(b) to a participant in a plan that terminated in that year:

| Year | Maximum guaranteeable monthly benefit |
|---|---|
| * * * * | * |
| 2004 | 3,698.86 |

Issued in Washington, DC, this 21st day of November, 2003.

**Joseph H. Grant,**

*Deputy Executive Director and Chief Operating Officer, Pension Benefit Guaranty Corporation.*

[FR Doc. 03–29642 Filed 11–28–03; 8:45 am]

BILLING CODE 7708–01–P

## PENSION BENEFIT GUARANTY CORPORATION

## 29 CFR Part 4044

## Allocation of Assets in Single-Employer Plans; Valuation of Benefits and Assets; Expected Retirement Age

**AGENCY:** Pension Benefit Guaranty Corporation.

**ACTION:** Final rule.

**SUMMARY:** This rule amends the Pension Benefit Guaranty Corporation's regulation on Allocation of Assets in Single-Employer Plans by substituting a new table that applies to any plan being terminated either in a distress termination or involuntarily by the PBGC with a valuation date falling in 2004, and is used to determine expected retirement ages for plan participants. This table is needed in order to compute the value of early retirement benefits and, thus, the total value of benefits under the plan.

**EFFECTIVE DATE:** January 1, 2004.

**FOR FURTHER INFORMATION CONTACT:** Harold J. Ashner, Assistant General Counsel, Office of the General Counsel, Pension Benefit Guaranty Corporation, 1200 K Street, NW., Washington, DC 20005–4026; 202–326–4024. (TTY/TDD users may call the Federal relay service toll-free at 1–800–877–8339 and ask to be connected to 202–326–4024.)

**SUPPLEMENTARY INFORMATION:** The PBGC's regulation on Allocation of Assets in Single-Employer Plans (29 CFR part 4044) sets forth (in subpart B) the methods for valuing plan benefits of terminating single-employer plans

covered under Title IV of the Employee Retirement Income Security Act of 1974. Under ERISA section 4041(c), guaranteed benefits and benefit liabilities under a plan that is undergoing a distress termination must be valued in accordance with part 4044, subpart B. In addition, when the PBGC terminates an underfunded plan involuntarily pursuant to ERISA Section 4042(a), it uses the subpart B valuation rules to determine the amount of the plan's underfunding.

Under § 4044.51(b), early retirement benefits are valued based on the annuity starting date, if a retirement date has been selected, or the expected retirement age, if the annuity starting date is not known on the valuation date. Sections 4044.55 through 4044.57 set forth rules for determining the expected retirement ages for plan participants entitled to early retirement benefits. Appendix D of part 4044 contains tables to be used in determining the expected early retirement ages.

Table I in appendix D (Selection of Retirement Rate Category) is used to determine whether a participant has a low, medium, or high probability of retiring early. The determination is based on the year a participant would reach ''unreduced retirement age'' (*i.e.*, the earlier of the normal retirement age or the age at which an unreduced benefit is first payable) and the participant's monthly benefit at unreduced retirement age. The table applies only to plans with valuation dates in the current year and is updated annually by the PBGC to reflect changes in the cost of living, etc.

Tables II–A, II–B, and II–C (Expected Retirement Ages for Individuals in the Low, Medium, and High Categories respectively) are used to determine the expected retirement age after the probability of early retirement has been determined using Table I. These tables establish, by probability category, the expected retirement age based on both the earliest age a participant could retire under the plan and the unreduced retirement age. This expected retirement age is used to compute the value of the early retirement benefit and, thus, the total value of benefits under the plan.

This document amends appendix D to replace Table I–03 with Table I–04 in order to provide an updated correlation, appropriate for calendar year 2004, between the amount of a participant's benefit and the probability that the participant will elect early retirement. Table I–04 will be used to value benefits in plans with valuation dates during calendar year 2004.

The PBGC has determined that notice of and public comment on this rule are impracticable and contrary to the public interest. Plan administrators need to be able to estimate accurately the value of plan benefits as early as possible before initiating the termination process. For that purpose, if a plan has a valuation date in 2004, the plan administrator needs the updated table being promulgated in this rule. Accordingly, the public interest is best served by issuing this table expeditiously, without an opportunity for notice and comment, to allow as much time as possible to estimate the value of plan benefits with the proper table for plans with valuation dates in early 2004.

The PBGC has determined that this action is not a ''significant regulatory action'' under the criteria set forth in Executive Order 12866.

Because no general notice of proposed rulemaking is required for this regulation, the Regulatory Flexibility Act of 1980 does not apply (5 U.S.C. 601(2)).

**List of Subjects in 29 CFR Part 4044**

Pension insurance, Pensions.

■ In consideration of the foregoing, 29 CFR part 4044 is amended as follows:

## PART 4044—[AMENDED]

■ 1. The authority citation for part 4044 continues to read as follows:

**Authority:** 29 U.S.C. 1301(a), 1302(b)(3), 1341, 1344, 1362.

■ 2. Appendix D to part 4044 is amended by removing Table I–03 and adding in its place Table I–04 to read as follows:

**Appendix D to Part 4044.—Tables Used To Determine Expected Retirement Age**

TABLE I–04.—SELECTION OF RETIREMENT RATE CATEGORY

[For plans with valuation dates after December 31, 2003, and before January 1, 2005]

| Participant reaches URA in year— | Participant's Retirement Rate Category is— | | | |
|---|---|---|---|---|
| | Low[1] if monthly benefit at URA is less than— | Medium[2] if monthly benefit at URA is | | High[3] if monthly benefit at URA is greater than— |
| | | From | To | |
| 2005 | 473 | 473 | 2,000 | 2,000 |
| 2006 | 483 | 483 | 2,042 | 2,042 |
| 2007 | 494 | 494 | 2,087 | 2,087 |
| 2008 | 505 | 505 | 2,133 | 2,133 |
| 2009 | 516 | 516 | 2,182 | 2,182 |
| 2010 | 528 | 528 | 2,233 | 2,233 |
| 2011 | 540 | 540 | 2,284 | 2,284 |
| 2012 | 553 | 553 | 2,336 | 2,336 |
| 2013 | 566 | 566 | 2,390 | 2,390 |
| 2014 or later | 579 | 579 | 2,445 | 2,445 |

[1] Table II–A.
[2] Table II–B.
[3] Table II–C.

* * * * *

Issued in Washington, DC, this 21st day of November, 2003.

**Joseph H. Grant,**

*Deputy Executive Director and Chief Operating Officer, Pension Benefit Guaranty Corporation.*

[FR Doc. 03–29641 Filed 11–28–03; 8:45 am]

BILLING CODE 7708–01–P

## DEPARTMENT OF THE INTERIOR

## Office of Surface Mining Reclamation and Enforcement

## 30 CFR Part 948

**[WV–091–FOR]**

## West Virginia Regulatory Program

**AGENCY:** Office of Surface Mining Reclamation and Enforcement (OSM), Interior.

**ACTION:** Final rule; approval of amendment.

**SUMMARY:** We are announcing our approval of an amendment to the West Virginia surface coal mining regulatory program (the West Virginia program) under the Surface Mining Control and Reclamation Act of 1977 (SMCRA or the Act). The amendment we are approving consists of changes to the West Virginia Surface Mining Reclamation Rules as contained in House Bill 2663. The amendment is intended to improve the operational efficiency of the West Virginia program.

**EFFECTIVE DATE:** December 1, 2003.

**FOR FURTHER INFORMATION CONTACT:** Mr. Roger W. Calhoun, Director, Charleston Field Office, 1027 Virginia Street East, Charleston, West Virginia 25301. Telephone: (304) 347–7158. Internet: *chfo@osmre.gov.*

**SUPPLEMENTARY INFORMATION:**

I. Background on the West Virginia Program
II. Submission of the Amendment
III. OSM's Findings
IV. Summary and Disposition of Comments
V. OSM's Decision
VI. Procedural Determinations

### I. Background on the West Virginia Program

Section 503(a) of SMCRA permits a State to assume primacy for the regulation of surface mining and reclamation operations on non-Federal and non-Indian lands within its borders by demonstrating that its State program includes, among other things, ''a State law which provides for the regulation of surface coal mining and reclamation operations in accordance with the requirements of the Act * * *; and rules and regulations consistent with regulations issued by the Secretary pursuant to the Act.'' See 30 U.S. C. 1253(a)(1) and (7). On the basis of these criteria, the Secretary of the Interior conditionally approved the West Virginia program on January 21, 1981. You can find background information on the West Virginia program, including the Secretary's findings, the disposition of comments, and conditions of approval in the January 21, 1981, **Federal Register** (46 FR 5915). You can also find later actions concerning West Virginia's program and program amendments at 30 CFR 948.10, 948.12, 948.13, 948.15, and 948.16.

### II. Submission of the Amendment

By letter dated May 2, 2001 (Administrative Record Number WV–1209), the West Virginia Department of Environmental Protection (WVDEP) submitted a proposed amendment to the West Virginia program. The program amendment consists of changes to the West Virginia Surface Mining Reclamation Rules at Code of State Regulations (CSR) 38–2, as amended by House Bill 2663.

We announced receipt of the proposed amendment in the May 24, 2001, **Federal Register** (66 FR 28682). In the same document, we opened the public comment period and provided an opportunity for a public hearing or meeting on the adequacy of the proposed amendment (Administrative Record Number WV–1213). The public comment period closed on June 25, 2001. At the request of two commenters, we extended the comment period through July 13, 2003 (Administrative Record Numbers WV–1222 and WV–1223). We received comments from four environmental organizations and two Federal agencies.

We did not request comments on the proposed changes to CSR 38–2–3.14.b.12, concerning the partial removal of coal processing refuse piles, because that activity pertains to the removal of coal refuse that does not meet the definition of coal. In 1990, we stated that ''the removal, transport and use (without onsite reprocessing) of coal mine refuse which does not meet the definition of ''coal'' set forth in 30 CFR 700.5; *i.e.*, ASTM Standard D 388–77, is not subject to regulation [under SMCRA].'' 55 FR 21314; May 23, 1990. Therefore, it is not subject to regulation under SMCRA, and will not be considered here. We note that the removal of abandoned coal refuse piles was the subject of a later amendment that was addressed in a final rule notice published in the May 1, 2002, **Federal Register** (67 FR 21920) (Administrative Record Number WV–1300).

In the proposed rule notice published on May 24, 2001, we incorrectly stated that the definition of ''cumulative impact area'' at CSR 38–2–2.39 is new and subject to public comment. The definition of ''cumulative impact area'' is not new, and is already part of the approved West Virginia program.

On July 1, 2003, WVDEP sent us a letter containing clarification concerning the proposed deletion of the definition of ''cumulative impact,'' the addition of a definition of ''material damage to the hydrologic balance outside the permit areas,'' and the addition of a provision qualifying certain coal removal during reclamation as government-financed construction that is exempt from a permit (Administrative Record Number WV–1365). The State's July 1, 2003, letter was in response to questions that we posed in a list dated February 26, 2003 (Administrative Record Number WV–1365). We announced receipt of the State's clarification letter in the **Federal Register** on July 31, 2003 (68 FR 44910). In the same document, we reopened the comment period to provide the public an opportunity to review and comment on the State's letter and whether the amendment, as further clarified in the State's letter dated July 1, 2003, satisfies the applicable program approval criteria of 30 CFR 732.15 (Administrative Record Number WV–1369). The public comment period closed on August 15, 2003. At the request of a Federal agency, we extended the public comment period through August 29, 2003 (Administrative Record Number WV–1371). We received comments from three environmental organizations and two Federal agencies.

Several of the proposed changes to the West Virginia regulations that were submitted as part of this amendment were intended to address required program amendments codified in the Federal regulations at 30 CFR 948.16(xx), (qqq), (zzz), (ffff), (gggg), (hhhh), (jjjj), (nnnn) and (pppp). We expedited our review of the specific amendments relating to those required amendments and published our decisions on them in the **Federal Register** on May 1, 2002 (67 FR 21904). Specifically, our findings on the following provisions that were submitted with this amendment and were addressed in our May 1, 2002, decision include: CSR 38–2–14.8.a.6 (948.16(xx)); CSR 38–2–12.2.e (948.16(qqq)); CSR 38–2–3.12.a.1 (948.16(zzz)); CSR 38–2–16.2.c.4 (948.16(ffff)); CSR 38–2–16.2.c.4 (948.16(gggg)); CSR 38–2–16.2.c.4

(948.16(hhhh)); CSR 38–2–12.4.e (948.16(jjjj)); CSR 38–2–3.14.a (948.16(nnnn)); and CSR 38–2–24.4 (948.16(pppp)). Our findings on the remaining amendments submitted to us on May 2, 2001, are presented below.

## III. OSM's Findings

Following are the findings we made pursuant to SMCRA and the Federal regulations at 30 CFR 732.15 and 732.17 concerning the proposed amendments to the West Virginia program. Any revisions that we do not specifically discuss below concern nonsubstantive wording or editorial changes and are approved here without discussion.

*1. CSR 38–2–2.39 Definition of ''Cumulative Impact''*

The definition of ''cumulative impact'' at CSR 38–2–2.39 is being deleted. The deleted definition provided as follows:

> 2.39. Cumulative Impact means the hydrologic impact that results from the cumulation of flows from all coal mining sites to common channels or aquifers in a cumulative impact area. Individual mines within a given cumulative impact area may be in full compliance with effluent standards and all other regulatory requirements, but as a result of the co-mingling of their off-site flows, there is a cumulative impact. The Act does not prohibit cumulative impacts but does emphasize that they be minimized. When the magnitude of cumulative impact exceeds threshold limits or ranges as predetermined by the Division, they constitute material damage.

There is no Federal counterpart to the definition of ''cumulative impact'' at CSR 38–2–2.39 that the State proposes to delete. Under SMCRA at section 505, the States have the discretion to add laws or regulations to their programs as long as those laws or regulations are not inconsistent with SMCRA. Conversely, the States also have the discretion to remove laws or regulations from their approved programs so long as the removal does not render the program inconsistent with SMCRA. Therefore, the criterion we must apply in deciding whether to approve the proposed deletion is whether or not the deletion would render the West Virginia program less stringent than SMCRA or less effective than the Federal regulations. That criterion is different than the question of whether the deletion of the definition of ''cumulative impact'' may alter the existing CHIA process in West Virginia in a way that is adverse to some commenters' interests as they have asserted (see Section IV, Summary and Disposition of Comments). Rather, we are rendering a decision only on the question of whether the deletion of the definition of ''cumulative impact'' renders the West Virginia program less stringent than SMCRA or less effective than the Federal regulations.

As the WVDEP noted in its July 1, 2003, letter to OSM, the West Virginia program contains a counterpart to the Federal definition of ''cumulative impact area.'' That definition was determined earlier to be consistent with the counterpart Federal definition of the term ''cumulative impact area'' at 30 CFR 701.5. The West Virginia program also has approved counterparts to all of the Federal CHIA-related requirements, and those provisions are not at issue here. However, there is no Federal requirement that State programs contain a definition of ''cumulative impact.'' For these reasons, we find that the deletion of the definition of ''cumulative impact'' does not render the West Virginia program less stringent than SMCRA nor less effective than the Federal regulations and can be approved. We express no further opinion on whether or how the deletion of this definition may alter the current CHIA process in West Virginia, because such procedural changes are within the State's discretion under the existing Federal regulations.

*2. CSR 38–2–3.22.e Cumulative Hydrologic Impact Assessment (CHIA)*

The CHIA provision at CSR 38–2–3.22.e is being amended by adding the following definition of material damage:

> 3.22.e. .* * * Material damage to the hydrologic balance outside the permit areas means any long term or permanent change in the hydrologic balance caused by surface mining operation(s) which has a significant adverse impact on the capability of the affected water resource(s) to support existing conditions and uses.

There is no Federal counterpart to the proposed State definition of ''material damage to the hydrologic balance outside the permit areas.'' Nor is there a Federal requirement that States develop a definition of material damage. In addition, SMCRA at section 505(b) provides that any State statutory or regulatory provision which is in effect or may become effective after the enactment of SMCRA and that provides for the control and regulation of surface mining and reclamation operations for which no provision is contained in SMCRA shall not be construed to be inconsistent with SMCRA. In a **Federal Register** notice dated September 26, 1983, OSM addressed comments on the Federal CHIA regulations at 30 CFR 780.21(g) and 784.14(f) (48 FR 43956). OSM concluded that, because the gauges for measuring material damage may vary from area to area, and even from operation to operation, the criteria for determining material damage should be left to the States (48 FR 43956, 43972–43973).

It is expected that State and Federal regulatory authorities will develop criteria to measure material damage for the purposes of the CHIAs. Currently, all 24 State coal regulatory programs and the Federal regulatory programs in Tennessee, Washington, and the Federal Indian lands program have implemented a CHIA process. All of these programs include making decisions on whether or not material damage outside the permit area would occur. As such, each has established some basis or criteria for making those decisions. Seeking Federal approval of such criteria is discretionary, and many States have developed and applied such criteria without OSM approval. Only one State (Wyoming), has previously codified a definition of material damage and has had that definition approved by OSM. We approved Wyoming's definition of material damage in the original program approval on November 26, 1980, as follows: ''material damage to the hydrologic balance is a significant long-term or permanent adverse change to the hydrologic regime.'' We note that Wyoming's approved definition includes a long-term aspect as does the proposed West Virginia definition of material damage to the hydrologic balance outside the permit areas.

While West Virginia has submitted its definition of material damage for approval, that action does not alter the fact that it, like any other State, has the discretion to develop and implement material damage criteria without seeking or awaiting OSM approval of that criteria. The WVDEP's July 1, 2003, letter acknowledges that the State intends to use a narrative-based use standard in making its CHIAs and is asking for OSM to formally sanction that narrative-based standard. Furthermore, the WVDEP also stated in its July 1, 2003, letter, that the State approach will consider both water quality numerical limits and water resources uses designated by the water quality programs in making the CHIAs required by the mining program. In essence, the State proposes to adopt both a use-based narrative standard and a numeric standard for evaluating material damage to the hydrologic balance under its CHIA process.

As mentioned above in Finding 1, the West Virginia program has approved counterparts to all the Federal CHIA-related requirements. However, there is no Federal requirement that States must develop a specific definition of material damage. The proposed definition does not on its face negate, supersede, alter, or conflict with any of the approved

State rules related to the CHIA process or their Federal counterparts. For these reasons, we find that the proposed State definition of material damage does not render the West Virginia program less stringent than SMCRA nor less effective than the Federal regulations and can be approved.

*3. CSR 38–2–3.31 Federal, State, County, Municipal, or Other Local Government-Financed Highway or Other Construction Exemption*

By submitting the following changes on May 1, 2002, and March 18, 2003, the State proposes to amend CSR 38–2–3.31 (Administrative Record Numbers WV–1209 and WV–1352).

In its March 18, 2003, amendment submittal, subsection 3.31.a is amended to provide that, ''Funding at less than fifty percent (50%) may qualify if the construction is undertaken as an approved government reclamation contract.'' We announced receipt of the proposed amendment to subsection 3.31.a in a proposed rule that was published in the **Federal Register** on April 14, 2003, (68 FR 17898). Although the rest of the submittal has been acted upon, we have not rendered a decision on the proposed amendment to subsection 3.31.a.

Subsection 3.31.c is new, and provides the following: ''Funding less than fifty percent (50%) may qualify if the construction is undertaken as part of an approved reclamation project in accordance with WV Code § 22–3–28.'' This amendment was submitted on May 1, 2002, and is intended to revise the West Virginia program to add the additional flexibility afforded by the revised Federal definition of the term ''government-financed construction'' at 30 CFR 707.5. For more information concerning the revised Federal definition and the Federal Abandoned Mine Land (AML) Enhancement Rule, see the February 12, 1999, **Federal Register** (64 FR 7469).

In its July 1, 2003, clarification letter to OSM, WVDEP stated that the ''change to allow coal removal in conjunction with a reclamation project is designed to encourage/result in low cost or no-cost reclamation as provided for in the Federal program (see 30 CFR 707.5).'' The WVDEP asserted that the State rule contains the same language as the Federal regulations, except that the State refers to the W. Va. Code and the Federal counterpart refers to title IV. Indeed, the Federal definition of ''Government-financed construction'' at 30 CFR 707.5 provides, in part, that funding at less than 50 percent may qualify if the construction is undertaken as an approved reclamation project under title IV of the Act. That is, the Federal definition of ''government-financed construction'' limits government funding at less than 50 percent to only those construction projects that are undertaken as approved abandoned mine land reclamation projects under title IV of SMCRA.

The WVDEP also stated that the W. Va. Code 22–3–28(e) is a subsection of W. Va. Code 22–3–28. Subsection (e), the WVDEP stated, is the only subsection of W. Va. Code 22–3–28 that mentions government-financed reclamation. Therefore, the WVDEP asserts, it is obvious that subsection (e) is the only applicable subsection to which the proposed CSR 38–2–3.31(c) could apply.

The WVDEP is currently in the process of revising the State AML Reclamation Plan to add counterparts to the Federal requirements at 30 CFR 874.17 which require specific consultations and concurrences with the Title V regulatory authority for AML construction projects receiving less than 50 percent government financing. In addition, the WVDEP intends to submit a revision to the State's AML rules during the 2004 regular legislative session that will add a counterpart to the Federal definition of ''government-financed construction'' at 30 CFR 707.5.

As discussed in the February 9, 1999, May 5, 2000, and May 1, 2002, **Federal Register** notices, we deferred taking similar action on proposed revisions to the State's statutory and regulatory provisions regarding government-financed construction (64 FR 6201, 64 FR 6204, 65 FR 26130 and 67 FR 21920). We took this action because the Federal AML Enhancement Rule had not been finalized and the State had not amended its rules. Even with the proposed changes mentioned above, the State has not completely revised its rules to include all of the AML Enhancement requirements at 30 CFR 707.5 and 874.17. In addition, in a recent ruling, the U.S. Court of Appeals concluded that the Federal AML Enhancement Rule is a reasonable interpretation of SMCRA. However, the Court found that, in promulgating the rule, OSM issued an interpretation that does not appear reasonable and remanded the case for further explanation. See *Kentucky Resources Council, Inc.* v. *Gale A. Norton, Secretary of the Interior, U.S. District Court of Appeals for the District of Columbia Circuit, Civil Action No. 01–5263, June 12, 2003.* Therefore, we are deferring our decision on the amendments at CSR 38–2–3.31.a and c until the State adds counterparts to the Federal regulations at 30 CFR 707.5 and 874.17 as discussed above.

*4. CSR 38–2–3.32.g. Permit Issuance—Unanticipated Event or Condition*

This provision is amended by adding new language at the end of the existing one-sentence paragraph, and by adding three new subdivisions. As amended, the provision is as follows:

3.32.g. The prohibition of subdivision 3.32.c shall not apply to a permit application due to any violation resulting from an unanticipated event or condition at a surface mine eligible for remining under permit held by the applicant that meets the requirements of 30 CFR 773.15(4)(i). An event will be presumed to be unanticipated for purposes of this paragraph if it:

3.32.g.1. Arose after remining permit was issued.

3.32.g.2. Was related to prior mining; and

3.32.g.3. Was not identified in the remining permit.

We find that as amended, CSR 38–2–3.32.g is substantively identical to and no less effective than the Federal requirements at 30 CFR 773.13 and can be approved. We note that the proposed language contains a citation error, in that ''30 CFR 773.15(4)(i)'' should be ''30 CFR 785.25.'' It is our understanding that the citation error will be corrected at a future date. Our finding that this provision is no less effective than the Federal regulations is based upon that understanding.

*5. CSR 38–2–5.2.a. Intermittent or Perennial Stream Buffer Zone*

This provision is amended by deleting the words, ''normal flow or gradient of the stream, adversely affect fish migration or related environmental values, materially damage the.'' In addition the words ''and'' and ''or other environmental resources'' are added. As amended, the provision is as follows:

5.2.a. Intermittent or Perennial Stream. No land within one hundred feet (100′) of an intermittent or perennial stream shall be disturbed by surface mining operations including roads unless specifically authorized by the Director. The Director will authorize such operations only upon finding that surface mining activities will not adversely affect the water quantity and quality or other environmental resources of the stream and will not cause or contribute to violations of applicable State or Federal water quality standards. The area not to be disturbed shall be designated a buffer zone and marked accordingly.

We find that as amended, section CSR 38–2–5.2.a. is substantively identical to and no less effective than the counterpart Federal regulations at 30 CFR 816.57(a)(1) and (b) and can be approved. We note that the State counterpart to the Federal regulations at 30 CFR 816.57(a)(2) concerning stream channel diversions was previously

approved and is located at CSR 38–2–5.3.

*6. CSR 38–2–11.3.a.3. Surety Bonds*

This provision is new, and provides as follows:

11.3.a.3. Surety received after July 1, 2001, must be recognized by the treasurer of state as holding a current certificate of authority from the United States Department of the Treasury as an acceptable surety on federal bonds.

There is no counterpart to this new State provision in the Federal surface mining regulations. However, before a surety company can issue a bond for a Federal project, it must be certified by the U.S. Department of the Treasury. For further information, see Department of the Treasury's Listing of Approved Sureties, Department Circular 570. Therefore, we find that the new provision does not render the West Virginia program inconsistent with the Federal bonding and insurance regulations at 30 CFR part 800 and can be approved.

## IV. Summary and Disposition of Comments

*Public Comments*

We asked for public comments on the State's amendment in the **Federal Register** on May 24, 2001 (66 FR 28682) (Administrative Record Number WV–1213). We received comments from the West Virginia Rivers Coalition (Administrative Record Number WV–1228), and combined comments from Hominy Creek Preservation Association, Inc., Ohio River Valley Environmental Coalition, Inc., and Citizen Coal Council (Administrative Record Number WV–1227). We also asked for comments on the State's clarification letter in the **Federal Register** on July 31, 2003 (Administrative Record Number WV–1368). By letter dated August 15, 2003, the Hominy Creek Preservation Association, Inc., Ohio River Valley Environmental Coalition, Inc., and Citizen Coal Council submitted combined comments in response to the WVDEP's July 1, 2003, letter of explanation concerning the CHIA amendments (Administrative Record Number WV–1370).

1. A commenter stated that, despite the State's assertion that the amendments become effective on August 1, 2001, the Federal regulations provide that no amendments may take effect until OSM approves the change as a program amendment. We concur with this comment. According to the Federal regulations at 30 CFR 732.17(g) concerning State program amendments, no changes to laws or regulations that make up the approved State program shall take effect for purposes of a State program until approved as an amendment. However, as noted above in Finding 2, because the Federal rules do not define material damage, a State has discretion to develop and implement material damage criteria without seeking or awaiting OSM approval of that criteria.

2. A commenter asserted that the State did not include a ''reasoned analysis'' as to why it was making the changes to delete the definition of ''cumulative impact'' at CSR 38–2–2.39 and to add the definition of ''material damage to the hydrologic balance outside the permit area'' at CSR 38–2–3.22.e. Despite its July 1, 2003, clarification letter, the commenter asserted, the State has still not offered a rational explanation for the proposed amendment. This comment is beyond the scope of our criteria in approving proposed State program amendments. Whether or not the State has provided a ''reasoned analysis'' of proposed changes is an issue for the State rulemaking process. Our criterion is only to the issue of whether or not the proposed changes are consistent with the Federal requirements.

3. A commenter stated that the definition of ''cumulative impact'' at CSR 38–2–2.39 is needed because the term ''cumulative impact'' is used at CSR 38–2–3.32.d.5. Subsection 3.32.d.5 provides that no permit application or significant revision may be approved until, among other things, the WVDEP has made an assessment of the probable ''cumulative impacts'' of all anticipated coal mining on the hydrologic balance in the cumulative impact area, and has determined that the proposed operation has been designed to prevent material damage to the hydrologic balance outside the permit area. The commenter stated that for CSR 38–2–3.32.d.5 to retain meaning, the term ''cumulative impact'' must continue to be defined. We disagree with this comment, because the State retains the definition of ''cumulative impact area'' at CSR 38–2–2.39, which explains the concept of cumulative impact to mean the area, including the permit area, within which impacts resulting from the proposed operation may interact with the impacts of all anticipated mining on surface and groundwater systems. As addressed in a prior approval, the State's definition of cumulative impact area is substantively identical to the Federal definition of cumulative impact area at 30 CFR 701.5.

The commenter stated that the definition of ''cumulative impact'' is also important because it clarifies that ''individual mines within a given cumulative impact area may be in full compliance with effluent standards and all other regulatory requirements, but as a result of the co-mingling of their off-site flows, there is cumulative impact.'' By deleting the definition, the commenter asserted, this clarification is omitted from the rules, making it more difficult in the future to hold individual mines accountable if they impact nearby water resources. In response, despite the deletion of the definition of ''cumulative impact,'' the WVDEP continues to require, at CSR 38–2–14.5, that all surface mining and reclamation activities shall be conducted to prevent material damage to the hydrologic balance outside the permit area. In its July 1, 2003, letter, the WVDEP stated that it will consider the numerical limits and water resource use designated by the water quality programs to make its CHIAs. As discussed above in Finding 1, the deletion of the definition of ''cumulative impact'' does not render the West Virginia program less effective than the Federal regulations which do not contain a definition of ''cumulative impact.''

In addition, the commenter stated, the original definition of ''cumulative impact'' requires that cumulative impacts be minimized. The proposed deletion, the commenter stated, does away with this goal, further weakening the proposed new regulations. We disagree. The State performance standards at CSR 38–2–14.5 concerning hydrologic balance provide that all surface mining and reclamation activities shall be conducted to minimize the disturbance of the hydrologic balance within the permit and adjacent area, and to prevent material damage to the hydrologic balance outside the permit area.

The commenter also stated that the deletion of the definition of ''cumulative impact'' at CSR 38–2–2.39 and the addition of the definition of ''material damage to the hydrologic balance'' at CSR 38–2–3.22.e. combine to redefine ''material damage.'' The commenter stated that the proposed definition of ''material damage to the hydrologic balance'' refers to ''existing conditions and uses'' without stating whether this phrase refers to ''existing uses'' as defined in the Clean Water Act (CWA) or a plain English definition such as ''those conditions currently found.'' If a new definition of ''material damage'' is to be adopted, it should be clearly tied to ''existing uses'' and ''designated uses'' as defined in the CWA, the commenter stated. In response, the State's July 1, 2003, letter clearly links ''existing uses'' to the State's legislative rule at CSR 46–1 concerning

requirements governing stream uses and numerical water quality standards that apply to those streams. While the proposed definition of material damage only mentions existing uses, the State's water quality standards at CSR 46–1 take into consideration both existing and designated uses of streams. Therefore, as required by CSR 46–1, both existing and designated uses will be considered when determining what constitutes material damage to the hydrologic balance. In any case, such changes are within the discretion of the State under the Federal regulations.

The commenter stated that if OSM approves a new definition of ''material damage,'' it should be modified as follows: ''Material damage to the hydrologic balance outside the permit areas means any long term or permanent change in the hydrologic balance caused by surface mining operation(s) which has a significant adverse impact on the capability of the affected water resource(s) to support existing uses and designated uses as defined by the Clean Water Act and as implemented by the state's water quality standards.'' Otherwise, the commenter stated, the definition as currently written would have as a goal the maintenance of existing conditions—even if impacted water bodies are already impaired—rather than the goal of protecting existing and designated uses as required by the Clean Water Act. The proposed changes would facilitate the further degradation of polluted streams, the commenter asserted. In response, we believe that the State has, as explained in its July 1, 2003, letter, linked its CHIA requirements to the States identified uses of West Virginia streams and the numerical water quality standards that apply to those streams. Therefore, the State will consider both existing and designated uses when making its determination of material damage.

4. A commenter stated that the deletion of the definition of ''cumulative impact'' would authorize WVDEP to perform CHIAs that do not predetermine threshold limits or ranges in defining material damage and that do not include each applicable numeric water quality standard and effluent limitation among those limits and ranges. These amendments, the commenter stated, are not in accordance with the provisions of SMCRA, nor are they consistent with the Federal regulations governing hydrologic protection. The changes thus fail to meet the criteria for approval set forth at 30 CFR 732.15(a) and 732.17(h)(10), the commenter stated. The commenter also stated, in response to the WVDEP's July 1, 2003, letter, that it is essential that WVDEP set forth some objective criteria to use in performing CHIA's. Unless WVDEP sets specific limits or ranges of cumulative impact (whether based on biological, chemical, or other parameters), there can be no ''objective criteria'' to determine whether a surface coal mining operation has or has not materially damaged the ''use'' of a water body. Indeed, the commenter stated, to implement effectively the ''use''-based material damage standard that WVDEP proposes, the agency will necessarily have to establish threshold limits or ranges of parameters that measure actual stream ''use'' in order to determine objectively whether the hydrologic effect of a particular operation meets or violates any narrative ''use'' standard in 46 CSR 1. At a minimum, the commenter stated, monitoring plans for permits approved on the basis of a biologically-based ''use'' standard would necessarily have to establish specific thresholds and ranges of biological activity in making such determinations. Thus, repeal of the current requirement to predetermine ''threshold limits or ranges'' of cumulative impact that constitute material damage to the hydrologic balance cannot be justified by either the goal of establishing ''objective criteria'' or the goal of shifting to use-based standard for material damage.

We disagree with the assertion that the proposed changes are not consistent with SMCRA or the Federal regulations. It is our understanding that under the proposed amendments, the WVDEP will conduct CHIAs by considering the West Virginia legislative rules at CSR 46–1 to identify both the existing and designated uses and the established numerical water quality standards for the streams and stream segments in the cumulative impact area. The numerical water quality standards identified in CSR 46–1 are, as WVDEP stated in its July 1, 2003, letter, intended to protect the respective stream uses that are identified in CSR 46–1. Therefore, it is the numerical water quality standards that are the objective criteria that the WVDEP will use in its assessment of whether the proposed mining operation is designed to prevent material damage outside the permit area in accordance with CSR 38–2–3.22.e. As noted in its July 1, 2003, letter, the State also plans to adopt a use-based narrative standard to assess material damage to the hydrologic balance. The WVDEP stated that this approach considers the numerical limits and water resource use designated by the water programs when making CHIAs. In any case, West Virginia has the discretion under the Federal regulations to establish or modify its CHIA process, without seeking OSM's approval, so long as it remains consistent with Federal regulations. Therefore, to the extent that these changes may broaden the State's discretion in its CHIA process, it is still consistent with Federal regulations.

The commenter also stated that, at a minimum, OSM must require WVDEP to explain how the WVDEP will require permittees to monitor affected water bodies in a manner that produces data that can be ''used to determine the impact of the operation on the hydrologic balance'' as CSR 38–2–3.22.g and 38–2–3.22.h require. The proposed shift to a ''use''-based definition of material damage appears to make irrelevant any measurement of the chemical or physical parameters mentioned in the hydrologic monitoring provisions of the approved program, because those parameters do not (at least directly) measure changes in the capability of a water body to support a specific ''use.'' Since WVDEP does not propose a change in the specifically required monitoring parameters, the commenter stated, how will the WVDEP ensure that permittees develop meaningful data for determining whether material damage has occurred? In response, the State's shift to a ''use''-based definition of material damage does not mean that the State has abandoned the use of numerical water quality standards. Rather, the WVDEP has indicated that the State is using the ''use'' designations of West Virginia streams as identified in CSR 46–1 to identify the designated use of a stream or stream segment, and to determine the numerical water quality standards for those streams and stream segments. The use of CSR 46–1 allows the WVDEP CHIA reviewers to clearly identify the numerical water quality standards for West Virginia streams. The WVDEP stated in its July 1, 2003, letter that the State rules provide a narrative standard, based upon use, for the reviewers to apply when making CHIA findings.

The commenter stated that, as noted in detail in their initial comments on the proposed amendments (see Administrative Record Number WV–1227), the proposed deletion of the ''cumulative impact'' definition appears aimed at eliminating rather than establishing ''objective criteria'' for determining whether a mining operation causes material damage to the hydrologic balance. The commenter also stated that without the existing requirement to predetermine threshold limits or ranges, WVDEP's proposed definition of ''material damage''

establishes decidedly subjective criteria that will unquestionably prove unenforceable. We disagree with this comment, because the State regulations at CSR 46–1 clearly identify the specific numerical water quality standards that apply to West Virginia's streams and stream segments.

The commenter also stated that none of the terms used in the definition of ''material damage'' (such as ''long term,'' ''permanent,'' and ''capability'') is an objective criterion. Even if WVDEP had defined these terms, the commenter stated, the WVDEP's definitions of the terms would not have necessarily precluded the West Virginia Surface Mine Board or the West Virginia courts from settling on different definitions. The vague nature of the terms in the proposed ''material damage'' definition requires OSM to conclude that approval of the proposed program amendments would render the West Virginia program less effective than its Federal counterpart. First, there is no Federal counterpart to the proposed definition, nor is there a Federal requirement that the State establish objective criteria, or submit them to OSM for approval. We agree with the comment that some of the words in the definition of ''material damage to the hydrologic balance outside the permit areas'' may appear to be vague and subject to interpretation. However, the numerical water quality standards presented in the regulations at CSR 46–1, which take into consideration stream uses, are clear. Therefore, despite the vagueness of some words in the definition, the State has clear numeric and use based standards that the WVDEP has stated it will consider when performing a CHIA determination.

In referring to the statements in the WVDEP's July 1, 2003, letter, the commenter stated that nothing in the rulemaking record supports the WVDEP's suggestion that the existing ''cumulative impact'' definition leaves ''the threshold(s) to be assigned to the unguided discretion of an individual reviewer.'' In actual practice, when WVDEP reviewers have assigned ''threshold limits or ranges'' under the existing regulation, they have drawn them from the established numeric West Virginia water quality standards in Appendix E to CSR 46–1. WVDEP cites not even one instance, the commenter stated, in which an ''individual reviewer'' has assigned any ''threshold'' that does not appear in Appendix E. Even if there have been such instances, the rational remedy would be to confine the assignable threshold limits or ranges to those set forth in Appendix E, rather than doing away with limits or ranges altogether. An unrealized potential for abuse does not constitute a rational justification for repealing West Virginia's ''cumulative impact'' definition, particularly in view of the State's ability to prevent abuse without doing away with ''threshold limits or ranges'' entirely, the commenter stated. The commenter is seeking OSM intervention into the innerworkings of the State's CHIA process that Federal regulations have left to the discretion of the States. In response, this comment acknowledges WVDEP's current reliance on the water quality standards in Appendix E of CSR 46–1. We believe that this is what the WVDEP stated that it will do as part of its CHIA process in its July 1, 2003, letter. That is, it stated that ''[t]he WVDEP approach considers the numerical limits and water resource use designated by the water quality programs to make the assessment required by the mining program.'' Requiring all CHIA reviewers to use the specific standards at CSR 46–1 should also eliminate WVDEP's concern that such standards would be developed individually by the unguided discretion of individual reviewers.

The commenter stated that WVDEP's claim that the proposed program amendments will prevent development or utilization of thresholds or parameters for effluent discharges other than those established by the CWA program is a complete non sequitur. The threshold limits or ranges required by the current definition of ''cumulative impact'' concern determinations of ''material damage to the hydrologic balance.'' When predetermined, such threshold limits or ranges apply to the water quality of water bodies that receive effluent discharges from surface coal mining and reclamation operations, not to effluent discharges themselves. Thus, it is irrational to suggest that abandonment of the requirement to predetermine threshold limits and ranges preclude development or utilization of thresholds or parameters for effluent discharges that might prove inconsistent with the CWA. Moreover, the commenter stated, even if predetermination of ''threshold limits or ranges'' might conceivably dictate effluent limitations that conflict with West Virginia's program under the CWA, the only rational solution to that problem would be to confine the selection of limits or ranges to those that are consistent with proper implementation of the CWA, not to abandon threshold limits or ranges altogether. In response, we believe that by considering the numerical water quality standards in CSR 46–1, as the WVDEP so indicated in its July 1, 2003, letter, the WVDEP is in effect confining its consideration to those water quality standards that are consistent with proper implementation of the CWA. Furthermore, the State's water quality standards protect both aquatic life and human health by designating uses and establishing specific parameters and limits or ranges to protect such uses during mining.

The commenter stated that, absent a showing that the State's enforcement of SMCRA's hydrologic protection requirements has suffered from the absence of a ''use''-based material damage definition (rather than non-enforcement of the existing ''cumulative impact'' definition), the WVDEP's desire to shift to the sort of definition it previously rejected (and which OSM has found inappropriate for inclusion in its national regulations, the commenter stated) is arbitrary and capricious, the commenter stated. We disagree with this comment. As we stated above in Finding 2, OSM concluded that, because the gauges for measuring material damage may vary from area to area, and from operation to operation, the criteria for determining material damage should be left to the States (48 FR 43956, 43972–43973; September 26, 1983). It is not inappropriate for the State to amend its procedures or criteria for performing CHIAs and to amend those procedures as it deems necessary. Seeking Federal approval of CHIA criteria is discretionary.

5. A commenter stated that WVDEP's perceived need to establish a definition of ''material damage'' that is consistent with the administration and implementation of West Virginia's counterpart to the Clean Water Act, while rational in and of itself, does not provide a rational justification for repealing the definition of ''cumulative impact'' or shifting to an exclusively ''use''-based definition of material damage. The commenter stated that West Virginia has adopted numeric water quality standards that function hand-in-glove with the State's narrative, ''use''-based water quality criteria. The only rational method of ensuring that the CHIA process and enforcement of SMCRA's hydrologic protection requirements are consistent with the administration and implementation of West Virginia's counterpart to the Clean Water Act, the commenter stated, would be to confine the ''threshold limits or ranges'' that WVDEP may predetermine under the ''cumulative impact'' definition to (1) The numeric water quality standards applicable to each affected water body and (2) such additional limits or ranges as WVDEP

may determine necessary to enforce applicable narrative water quality criteria. Here again, the commenter stated, the perceived need to ensure compatibility with the Clean Water Act simply does not justify doing away with ''threshold limits or ranges'' that are an integral part of the State's program under the Clean Water Act. In response, as we stated above in Finding 2, the WVDEP's July 1, 2003, letter acknowledges that the State intends to use a narrative-based use standard in making its CHIAs. The WVDEP also stated in its July 1, 2003, letter, that the State approach will consider both water quality numerical limits and water resources uses designated by the water quality programs in making the CHIA required by the mining program.

6. A commenter stated that Congress imposed the CHIA requirement to ensure that regulatory authorities do not approve permit applications for mines that would make worse pollution overloads that already exist. Congress certainly intended, the commenter stated, that SMCRA regulatory authorities would perform CHIAs and make material damage findings that are consistent with the letter and underlying purpose of section 303(d) of the Clean Water Act, 33 U.S.C. 1313(d), which requires the imposition of sharply reduced effluent limits or the denial of National Pollutant Discharge Elimination System (NPDES) permits in order to restore the quality of streams overloaded with pollutants. The commenter referred to 30 U.S.C. 1292(a)(3) (requiring construction of SMCRA to avoid superseding, amending, modifying, or repealing the Clean Water Act).

In response, the WVDEP's July 1, 2003, letter did not address the specific points made here by the commenter. However, CSR 46–1 clearly sets forth the numerical water quality standards for streams and stream segments in West Virginia. Additionally, CSR 46–1 does not provide for or allow the discharge of pollutants that would make worse pollution overloads that already exist. Furthermore, CSR 38–2–14.15.b, like 30 CFR 816/817.42, clearly provides that discharges from areas disturbed by surface mining shall not violate effluent limitations or cause a violation of applicable water quality standards. Therefore, we cannot agree that it is the WVDEPs intention to allow discharges from mines that would not comply with effluent limitations or make worse pollution overloads that already exist.

7. A commenter stated that approval of the amendments at CSR 38–2–2.39 and CSR 38–2–3.22.e. would impair or preclude effective citizen participation in and OSM oversight of the administration and enforcement of the West Virginia program. The commenter asserts that the amendments at CSR 38–2–2.39 and CSR 38–2–3.22.e. replace predetermined, quantitative material damage criteria with a vague, subjective definition that would surely confound any citizen's effort to independently detect or prove a violation of the standard. The cost and restricted availability of experts whom a citizen would necessarily have to retain in any attempt to prove a violation of such an amorphous standard will almost certain chill public participation in its enforcement well below the freezing level.

We disagree with this comment. None of the amendments that the State is proposing affect in any way the public participation provisions of the approved West Virginia program. In addition, as it stated in its July 1, 2003, letter, the WVDEP will consider the existing and designated uses and numerical water quality standards for West Virginia streams and stream segments at CSR 46–1 when making CHIAs. These numerical water quality standards are the predetermined, quantitative standards with specific parameters and limits or ranges that WVDEP's CHIA reviewers will consider in making CHIA determinations, and that the public can use to monitor compliance.

8. One commenter addressed the amendments to CSR 38–2–5.2 concerning intermittent or perennial streams. The commenter stated that, ''the changes delete three explicit requirements, and substitute in their place the requirement that the activities will not adversely affect ''the water quantity and quality or other environmental resources of the stream'.'' The commenter stated that the amended rule is sufficiently vague that the practice of burying intermittent or perennial streams may arguably be approvable by the WVDEP, because burying streams would not directly contradict the letter of the rule. The commenter stated that, ''this clear attempt to weaken the existing rule should be disapproved.''

As we discussed above in Finding 5, we have determined that as amended, the revisions to section CSR 38–2–5.2.a. concerning intermittent or perennial streams render that provision substantively identical to the counterpart Federal regulations at 30 CFR 816.57(a)(1) and (b). Therefore, we found that the amendments can be approved. We also noted in Finding 5, that the State counterpart to the Federal regulations at 30 CFR 816.57(a)(2) concerning stream channel diversions was previously approved and is located at CSR 38–2–5.3.

*Federal Agency Comments*

Under 30 CFR 732.17(h)(11)(i) and section 503(b) of SMCRA, we requested comments on the amendments from various Federal agencies with an actual or potential interest in the West Virginia program by letters dated May 30, 2001 and July 25, 2003 (Administrative Record Numbers WV–1215 and WV–1367, respectively).

By letter dated June 25, 2001 (Administrative Record Number WV–1224), the U.S. Fish and Wildlife Service (USFWS) provided the following comments.

1. CSR 38–2–2.39 Definition of Cumulative Impact

The USFWS stated that the deletion of the definition of ''cumulative impact'' as meaning the hydrologic impact that results from the cumulation of flows from all coal mining sites to common channels or aquifers is a serious concern to the USFWS. The USFWS also stated that it is also concerned with the deletion of the language of that definition that states cumulative impact should be minimized.

The USFWS stated that cumulative impact assessments are required by the National Environmental Policy Act (NEPA) and by the Council on Environmental Quality's (CEQ) regulations requiring agencies to address cumulative effects. As stated in the CEQ regulations for implementing NEPA, the USFWS stated, cumulative effects are defined as the impact on the environment which results from the incremental impact of the action when added to other past, present, and reasonably foreseeable future actions regardless of what agency or person undertakes such other actions. ''We have ongoing concern,'' USFWS stated, ''for the cumulative impacts occurring from individual mountaintop mining operations on the ecological functioning of entire watersheds and believe that the law should address this very important issue more thoroughly rather than with less scrutiny.'' The USFWS recommended that these changes not be approved.

In response, the deletion of the definition of ''cumulative impact'' does not mean that the WVDEP will not be conducting cumulative hydrologic impact assessments. CSR 38–2–3.22.e continues to require the WVDEP to conduct a CHIA that is sufficient to determine whether the proposed mining operation has been designed to prevent material damage to the hydrologic balance outside the permit area. In

addition, the State regulations continue to require the permit applicant to provide probable hydrologic consequences (PHC) information (at 38–2–3.22.a) and to provide surface and groundwater monitoring plans (CSR 38–2–3.22.g and 3.22.h, respectively). The State's regulations continue to contain, at CSR 38–2–2.39, the definition of cumulative impact area. In addition, the State explained in its July 1, 2003, letter, that the WVDEP's CHIA process considers the numerical limits and water resource uses designated at CSR 46–1 to make the required CHIA. Therefore, under the approved State program, the State will continue to evaluate cumulative hydrologic impacts. Furthermore, actions of State regulatory authorities under their approved State coal regulatory programs are not subject to NEPA review.

2. CSR 38–2–3.22.e Definition of Material Damage to the Hydrologic Balance

The USFWS stated that in the new language added to CSR 38–2–3.22.e., the terms ''long term'' and ''significant adverse impact'' are not defined and therefore are open to individual interpretation. The USFWS recommended that this subsection contain a definition of these terms. Also, the USFWS stated, this definition effectively eliminates any consideration of short-term impacts to the hydrologic balance with no regard to the degree of those impacts. The USFWS further stated that it considers the elimination of any consideration of short-term impacts to be ''a serious shortcoming in protection of fish and wildlife resources.'' The USFWS recommended that these changes not be approved.

In response, there are, indeed, undefined words in the definition of ''material damage to the hydrologic balance outside the permit areas.'' However, the State's use of such words as ''long term'' and ''significant adverse impact'' in defining material damage does not render the State's definition less effective than SMCRA or the Federal regulations, because there is no Federal counterpart to this term. In accordance with SMCRA and the Federal regulations, the State provision requires a CHIA to determine whether the proposed operation has been designed to prevent material damage outside the permit area. Finally, the State's proposed definition does not supersede or prohibit compliance with any State or Federal water quality standards. Furthermore, short-term impacts will be considered. The NPDES effluent limitations established for a proposed permit will apply, as will all applicable State and Federal water quality standards. As we noted above in Finding 2, we determined that the definition of ''material damage to the hydrologic balance outside the permit areas'' does not render the West Virginia program less effective than the Federal CHIA regulations and can be approved.

3. CSR 38–2–5.2.a Intermittent or Perennial Stream

The USFWS stated that it opposes the changes to this provision. The USFWS specifically objected to the deletion of the language that required that mining activity within one hundred feet of an intermittent or perennial stream not adversely affect the normal flow or gradient of the stream, adversely affect fish migration or related environmental values or materially damage water quantity or quality. The USFWS stated that given that hundreds of miles of West Virginia's headwater streams have been permanently filled as a result of surface coal mining, it believes that protection of aquatic resources should be strengthened in the West Virginia program. The USFWS recommended that these changes not be approved. In response, and as we stated above in Finding 5, as amended, section CSR 38–2–5.2.a. is substantively identical to the counterpart Federal regulations at 30 CFR 816.57(a)(1) and (b) and can be approved. We also noted that the State counterpart to the Federal regulations at 30 CFR 816.57(a)(2) concerning stream diversions was previously approved and is located at CSR 38–2–5.3.

By letter dated August 27, 2003, and an e-mail message dated August 19, 2003 (Administrative Record Numbers WV–1375 and WV–1374, respectively), the U.S. Department of Labor, Mine Safety and Health Administration (MSHA) responded and stated that it has reviewed the additions and changes, and has determined that there is no inconsistency with MSHA's regulations. Most of the changes pertain to hydrologic impacts of mining and do not affect MSHA programs.

*Environmental Protection Agency (EPA) Comments/Concurrence*

Under 30 CFR 732.17(h)(11)(ii), we are required to obtain written concurrence from EPA for those provisions of the program amendment that relate to air or water quality standards issued under the authority of the Clean Water Act (33 U.S.C. 1251 *et seq.*) or the Clean Air Act (42 U.S.C. 7401 *et seq.*).

On May 29, 2003, we asked for concurrence on the amendments from EPA (Administrative Record Number WV–1214). On November 23, 2001 (Administrative Record Number WV–1252) EPA sent us its written concurrence with comments. EPA stated that there are no apparent inconsistencies with the CWA, NPDES regulations, or other statutes and regulations under the authority of EPA. EPA said that it is providing its concurrence with the understanding that implementation of the amendments must comply with the CWA, NPDES regulations, and other statutes and regulations under its authority. On July 25, 2003, we asked the EPA for its concurrence on the July 1, 2003, letter from the WVDEP that provided further clarification concerning proposed amendments regarding cumulative impact, material damage, and government-financed construction at CSR 38–2–2.39, 3.22.e, and 3.31.c, respectively (Administrative Record Number WV–1368). On August 19, 2003, EPA sent us its written concurrence with comments (Administrative Record Number WV–1372).

In its August 19, 2003, letter, EPA stated that WVDEP's clarification letter addresses ''cumulative impact'' and ''material damage,'' two of the issues that the EPA had concerns and recommendations. EPA stated that it feels that its recommendations on these issues as well as others addressed in its November 23, 2001, letter still have merit and should be considered for inclusion. Nevertheless, EPA stated, WVDEP's July 1, 2003, clarification letter stresses its commitment to require compliance with water quality standards, EPA's main concern.

EPA provided the following comments on the proposed amendments in its November 23, 2001, letter.

1. CSR 38–2–2.39 Definition of Cumulative Impact

EPA recommended that the definition of cumulative impact not be deleted, and that wording be added to the definition to clarify that it includes impacts from past, present, and reasonably foreseeable future activities. EPA stated that it is concerned that the deletion of the definition would leave that term cumulative impact vague and would subject it to individual interpretation. EPA stated that this could result in less environmental focus during preparation of a CHIA which is required for new mining operations. EPA stated that where cumulative impacts are large enough to cause non-compliance with water quality standards, including the anti-degradation policy, they constitute a violation of the CWA, even if the NPDES permits require compliance with

applicable technology-based effluent guideline limits.

As we noted above in Finding 1, the deletion of the definition of ''cumulative impact'' does not render the West Virginia program less effective because there is no Federal definition of cumulative impact as the term relates to CHIA. We also noted that the State's existing definition of ''cumulative impact area'' at CSR 38–2–2.39 clearly states that cumulative impact area means the area, including the permit area, within which impacts resulting from the proposed mining operation may interact with the impacts of all anticipated mining on surface and groundwater systems. The State's definition of ''cumulative impact area'' was determined earlier to be substantively identical to the counterpart Federal definition of ''cumulative impact area'' at 30 CFR 701.5. We believe that the impacts due to past mining are captured via the surface and ground water baseline data required by CSR 38–2–3.22. Therefore, in its CHIA assessment, the State will be considering the impacts from past, present, and anticipated future mining operations in the cumulative impact area. The WVDEP's July 1, 2003, letter further clarified that other sections of the State rules require the applicant to show no material outside the permit area and to assess cumulative impacts within the cumulative impact area. We concur with EPA's comment that where cumulative impacts are large enough to cause non-compliance with water quality standards, including the anti-degradation policy, they could constitute a violation of the CWA, even if the NPDES permits require compliance with applicable technology-based effluent guideline limits.

2. CSR 38–2–3.22.e Definition of ''Material Damage'' Added to This Provision

EPA recommended that the definition of material damage be expanded to include ''violation of water quality standards.'' EPA stated that water quality standards require protection of designated uses as well as existing uses, compliance with anti-degradation policy, and do not exempt short term adverse impacts. We agree that water quality standards require protection of designated uses as well as existing uses, compliance with anti-degradation policy, and do not exempt short term adverse impacts. In its July 1, 2003, letter, the WVDEP stated that the WVDEP approach considers the numerical water quality limits and the water resource use designated by the water quality programs. The WVDEP further stated that the uses are outlined in the State's rules at CSR 46–1. Under SMCRA and the Federal regulations, the purpose of the CHIA is to determine, for permit approval purposes, whether the proposed operation has been designed to prevent material damage to the hydrologic balance outside the permit area. We believe, as discussed above in Finding 2, that the State's program amendment does not render the West Virginia program less effective than the Federal CHIA provisions and can be approved.

3. CSR 38–2–3.32.g Unanticipated Event or Condition

EPA stated that, although unanticipated remining discharges may not be a cause for blocking future SMCRA permits, it wants to make sure that it is understood that remining companies are not exempt from NPDES permit violations which may arise from unanticipated discharges. EPA stated that where there may be a question about a potential unanticipated discharge during remining, such as release of water caused by breaking into an adjacent abandoned mine pool, EPA recommended that pre-remining exploration, boreholing, and reviewing of old mine maps be conducted to minimize this possibility. We concur that remining operations are not exempt from NPDES permit violations that arise from unanticipated discharges, and that appropriate pre-mining exploration should be conducted to minimize the possibility of breaking into adjacent abandoned mine pools. The State's approved program would allow such exploration if it is deemed necessary during remining operations.

4. CSR 38–2–5.2.a Intermittent or Perennial Stream Buffer Zones

EPA recommended that the entire current definition be retained, since it is more comprehensive about measures for environmental protection. EPA also stated that the most important part of the definition has been kept—the requirement for compliance with water quality standards. EPA stated that the proposed wording which prohibits adverse effects on water quantity and quality and other environmental resources should provide an added measure of environmental protection, with one exception—the proposed change from ''or'' to ''and'' in reference to ''water quantity or quality.'' EPA stated that the proposed word ''and'' implies that there must be adverse effects to both water quantity and quality before the activities are prohibited. EPA recommended keeping the word ''or'' which clarifies that adverse effects to either water quantity or quality are prohibited. EPA also stated that the proposed deletion of adverse effects on stream gradient and fish migration, as a reason for prohibiting surface mining activities, appears to be designed to accommodate construction of valley fills. EPA stated that filling of the waters of the U.S. requires authorization under Section 404 of the CWA. As we stated above in Finding 5, the State's proposed stream buffer zone requirements at CSR 38–2–5.2.a (along with CSR 38–2–5.3) are substantively identical to the counterpart Federal regulations at 30 CFR 816/817.57(a) and, therefore, can be approved. In addition, there is nothing in the proposed amendment that prevents or prohibits compliance with section 404 of the Clean Water Act.

## V. OSM's Decision

Based on the findings above, we are approving the amendments to the West Virginia program sent to us on May 2, 2001, and clarified by letter dated July 1, 2003. However, we are deferring our decision on the amendments at CSR 38–2–3.31.a and c regarding funding for government-financed construction until the State adds counterparts to the Federal regulations at 30 CFR 707.5 and 874.17.

To implement this decision, we are amending the Federal regulations at 30 CFR part 948, which codify decisions concerning the West Virginia program. We find that good cause exists under 5 U.S.C. 553(d)(3) to make this final rule effective immediately. Section 503(a) of SMCRA requires that a State program demonstrate that such State has the capability of carrying out the provisions of the Act and meeting its purposes. Making this rule effective immediately will expedite that process. SMCRA requires consistency of State and Federal standards.

## VI. Procedural Determinations

*Executive Order 12630—Takings*

This rule does not have takings implications. This determination is based on the analysis performed for the counterpart Federal regulation.

*Executive Order 12866—Regulatory Planning and Review*

This rule is exempt from review by the Office of Management and Budget under Executive Order 12866.

*Executive Order 12988—Civil Justice Reform*

The Department of the Interior has conducted the reviews required by section 3 of Executive Order 12988 and has determined that this rule meets the

applicable standards of subsections (a) and (b) of that section. However, these standards are not applicable to the actual language of State regulatory programs and program amendments because each program is drafted and promulgated by a specific State, not by OSM. Under sections 503 and 505 of SMCRA (30 U.S.C. 1253 and 1255) and the Federal regulations at 30 CFR 730.11, 732.15, and 732.17(h)(10), decisions on proposed State regulatory programs and program amendments submitted by the States must be based solely on a determination of whether the submittal is consistent with SMCRA and its implementing Federal regulations and whether the other requirements of 30 CFR parts 730, 731, and 732 have been met.

*Executive Order 13132—Federalism*

This rule does not have Federalism implications. SMCRA delineates the roles of the Federal and State governments with regard to the regulation of surface coal mining and reclamation operations. One of the purposes of SMCRA is to ''establish a nationwide program to protect society and the environment from the adverse effects of surface coal mining operations.'' Section 503(a)(1) of SMCRA requires that State laws regulating surface coal mining and reclamation operations be ''in accordance with'' the requirements of SMCRA, and section 503(a)(7) requires that State programs contain rules and regulations ''consistent with'' regulations issued by the Secretary pursuant to SMCRA.

*Executive Order 13175—Consultation and Coordination With Indian Tribal Governments*

In accordance with Executive Order 13175, we have evaluated the potential effects of this rule on Federally-recognized Indian tribes and have determined that the rule does not have substantial direct effects on one or more Indian tribes, on the relationship between the Federal Government and Indian tribes, or on the distribution of power and responsibilities between the Federal Government and Indian tribes. The basis for this determination is our decision is on a State regulatory program and does not involve Federal regulations involving Indian lands.

*Executive Order 13211—Regulations That Significantly Affect the Supply, Distribution, or Use of Energy*

On May 18, 2001, the President issued Executive Order 13211 which requires agencies to prepare a Statement of Energy Effects for a rule that is (1) Considered significant under Executive Order 12866, and (2) likely to have a significant adverse effect on the supply, distribution, or use of energy. Because this rule is exempt from review under Executive Order 12866 and is not expected to have a significant adverse effect on the supply, distribution, or use of energy, a Statement of Energy Effects is not required.

*National Environmental Policy Act*

This rule does not require an environmental impact statement because section 702(d) of SMCRA (30 U.S.C. 1292(d)) provides that agency decisions on proposed State regulatory program provisions do not constitute major Federal actions within the meaning of section 102(2)(C) of the National Environmental Policy Act (42 U.S.C. 4332(2)(C)).

*Paperwork Reduction Act*

This rule does not contain information collection requirements that require approval by OMB under the Paperwork Reduction Act (44 U.S.C. 3507 *et seq.*).

*Regulatory Flexibility Act*

The Department of the Interior certifies that this rule will not have a significant economic impact on a substantial number of small entities under the Regulatory Flexibility Act (5 U.S.C. 601 *et seq.*). The State submittal, which is the subject of this rule, is based upon counterpart Federal regulations for which an economic analysis was prepared and certification made that such regulations would not have a significant economic effect upon a substantial number of small entities. In making the determination as to whether this rule would have a significant economic impact, the Department relied upon the data and assumptions for the counterpart Federal regulations.

*Small Business Regulatory Enforcement Fairness Act*

This rule is not a major rule under 5 U.S.C. 804(2), the Small Business Regulatory Enforcement Fairness Act. This rule: (a) Does not have an annual effect on the economy of $100 million; (b) Will not cause a major increase in costs or prices for consumers, individual industries, Federal, State, or local government agencies, or geographic regions; and (c) Does not have significant adverse effects on competition, employment, investment, productivity, innovation, or the ability of U.S.-based enterprises to compete with foreign-based enterprises. This determination is based upon the analysis performed under various laws and executive orders for the counterpart Federal regulations.

*Unfunded Mandates*

This rule will not impose an unfunded mandate on State, local, or tribal governments or the private sector of $100 million or more in any given year. This determination is based upon the analysis performed under various laws and executive orders for the counterpart Federal regulations.

**List of Subjects in 30 CFR Part 948**

Intergovernmental relations, Surface mining, Underground mining.

Dated: November 17, 2003.

**Brent Wahlquist,**

*Regional Director, Appalachian Regional Coordinating Center.*

■ For the reasons set out in the preamble, title 30, chapter VII, subchapter T of the Code of Federal Regulations is amended as set forth below:

## PART 948—WEST VIRGINIA

■ 1. The authority citation for part 948 continues to read as follows:

**Authority:** 30 U.S.C. 1201 *et seq.*

■ 2. Section 948.15 is amended by adding a new entry to the table in chronological order by ''Date of publication of final rule'' to read as follows:

**§ 948.15 Approval of West Virginia regulatory program amendments.**

* * * * *

| Original amendment submission date | Date of publication of final rule | Citation/description of approved provisions |
|---|---|---|
| * * | * * | * * * |
| May 2, 2001, July 1, 2003 | December 1, 2003 | CSR 38–2–2.39 (a deletion), 3.22.e, 3.31.a (deferral), 3.32.g, 5.2.a, and 11.3.a.3. |

[FR Doc. 03–29757 Filed 11–28–03; 8:45 am]
BILLING CODE 4310–05–P

## LIBRARY OF CONGRESS

## Copyright Office

## 37 CFR Part 253

**[Docket No. 2003–3 CARP NCBRA]**

## Cost of Living Adjustment for Performance of Musical Compositions by Colleges and Universities

**AGENCY:** Copyright Office, Library of Congress.

**ACTION:** Final rule.

**SUMMARY:** The Copyright Office of the Library of Congress announces a cost of living adjustment of 2% in the royalty rates paid by colleges, universities, or other nonprofit educational institutions that are not affiliated with National Public Radio for the use of copyrighted published nondramatic musical compositions in the BMI, ASCAP and SESAC repertoires. The cost of living adjustment is based on the change in the Consumer Price Index from October, 2002 to October, 2003.

**EFFECTIVE DATE:** January 1, 2004.

**FOR FURTHER INFORMATION CONTACT:** Tanya M. Sandros, Senior Attorney, Copyright Arbitration Royalty Panel, P.O. Box 70977, Southwest Station, Washington, DC 20024. Telephone: (202) 707–8380. Telefax: (202) 252–3423.

**SUPPLEMENTARY INFORMATION:** Section 118 of the Copyright Act, 17 U.S.C., creates a compulsory license for the use of published nondramatic musical works and published pictorial, graphic, and sculptural works in connection with noncommercial broadcasting. Terms and rates for this compulsory license, applicable to parties who are not subject to privately negotiated licenses, are published in 37 CFR part 253 and are subject to adjustment at five-year intervals. 17 U.S.C. 118(c).

The most recent proceeding to consider the terms and rates for the section 118 license occurred in 2002. 67 FR 15414 (April 1, 2002). Final regulations governing the terms and rates of copyright royalty payments with respect to certain uses by public broadcasting entities of published nondramatic musical works, and published pictorial, graphic, and sculptural works for the license period beginning January 1, 2003, and ending December 31, 2007, were published in the **Federal Register** on December 17, 2002. 67 FR 77170 (December 17, 2002).

Pursuant to these regulations, on December 1 of each year the Librarian shall publish a notice of the change in the cost of living as determined by the Consumer Price Index (all consumers, all items) during the period from the most recent Index published prior to the previous notice, to the most recent Index published prior to December 1, of that year. 37 CFR 253.10(a). The regulations also require that the Librarian publish a revised schedule of rates for the public performance of musical compositions in the ASCAP, BMI, and SESAC repertoires by public broadcasting entities licensed to colleges and universities, reflecting the change in the Consumer Price Index. 37 CFR 253.10(b). Accordingly, the Copyright Office of the Library of Congress is hereby announcing the change in the Consumer Price Index and performing the annual cost of living adjustment to the rates set out in § 253.5(c).

The change in the cost of living as determined by the Consumer Price Index (all consumers, all items) during the period from the most recent Index published before December 1, 2002, to the most recent Index published before December 1, 2003, is 2% (2002's figure was 181.3; the figure for 2003 is 185.0, based on 1982–1984=100 as a reference base). Rounding off to the nearest dollar, the royalty rates for the use of musical compositions in the repertories of ASCAP, BMI, and SESAC are $254, $254, and $82, respectively.

### List of Subjects in 37 CFR Part 253

Copyright, Radio, Television.

### Final Regulation

■ For the reasons set forth in the preamble, part 253 of title 37 of the Code of Federal Regulations is amended as follows:

## PART 253—USE OF CERTAIN COPYRIGHTED WORKS IN CONNECTION WITH NONCOMMERCIAL EDUCATIONAL BROADCASTING

■ 1. The authority citation for part 253 continues to read as follows:

**Authority:** 17 U.S.C. 118, 801(b)(1) and 803.

■ 2. Section 253.5 is amended by revising paragraphs (c)(1) through (c)(3) as follows:

**§ 253.5 Performance of musical compositions by public broadcasting entities licensed to colleges and universities.**

* * * * *

(c) * * *

(1) For all such compositions in the repertory of ASCAP, $254 annually.

(2) For all such compositions in the repertory of BMI, $254 annually.

(3) For all such compositions in the repertory of SESAC, $82 annually.

* * * * *

Dated: November 21, 2003.

**Marybeth Peters,**

*Register of Copyrights.*

[FR Doc. 03–29824 Filed 11–28–03; 8:45 am]
BILLING CODE 1410–33–P

## ENVIRONMENTAL PROTECTION AGENCY

## 40 CFR Part 52

**[NE–193–1193; FRL–7592–1]**

## Approval and Promulgation of Air Quality Implementation Plans; Nebraska Update to Materials Incorporated by Reference

**AGENCY:** Environmental Protection Agency (EPA).

**ACTION:** Final rule; notice of administrative change.

**SUMMARY:** EPA is updating the materials submitted by Nebraska that are incorporated by reference (IBR) into the state implementation plan (SIP). The regulations affected by this update have been previously submitted by the state agency and approved by EPA. This update affects the SIP materials that are available for public inspection at the Office of the Federal Register (OFR), Office of Air and Radiation Docket and Information Center, and the Regional Office.

**EFFECTIVE DATE:** This action is effective December 1, 2003.

**ADDRESSES:** SIP materials which are incorporated by reference into 40 CFR part 52 are available for inspection at the following locations: Environmental Protection Agency, Region VII, 901 North 5th Street, Kansas City, Kansas 66101; Office of Air and Radiation Docket and Information Center, Room B–108, 1301 Constitution Avenue, NW (Mail Code 6102T), Washington, DC 20460, and Office of the Federal Register, 800 North Capitol Street NW., Suite 700, Washington, DC.

**FOR FURTHER INFORMATION CONTACT:** Evelyn VanGoethem at (913) 551–7659, or by e-mail at *vangoethem.evelyn@epa.gov.*

**SUPPLEMENTARY INFORMATION:** The SIP is a living document which the state can revise as necessary to address the unique air pollution problems in the state. Therefore, EPA from time to time

must take action on SIP revisions containing new and/or revised regulations as being part of the SIP. On May 22, 1997 (62 FR 27968), EPA revised the procedures for incorporating by reference Federally-approved SIPs, as a result of consultations between EPA and the Office of **Federal Register** (OFR). The description of the revised SIP document, IBR procedures and ''Identification of plan'' format are discussed in further detail in the May 22, 1997, **Federal Register** document.

On February 12, 1999, EPA published a document in the **Federal Register** (64 FR 7091) beginning the new IBR procedure for Nebraska. Today EPA is updating the IBR material.

EPA is also making minor corrections to the table in § 52.1420(c) as follows:

On February 14, 1996 (61 FR 5701), EPA approved and incorporated by reference revisions to Lincoln-Lancaster County Air Pollution Control Program, Article 2, Section 9. We are correcting the state effective date for Section 9, Article 2 to reflect that previous approval.

On February 14, 1996 (61 FR 5701), EPA approved and incorporated by reference revisions to City of Omaha, Chapter 41, Article IV, for 41–61. We are correcting the entries for 41–61 to reflect that previous approval.

EPA has determined that today's rule falls under the ''good cause'' exemption in section 553(b)(3)(B) of the Administrative Procedures Act (APA) which, upon finding ''good cause,'' authorizes agencies to dispense with public participation and section 553(d)(3) which allows an agency to make a rule effective immediately (thereby avoiding the 30-day delayed effective date otherwise provided for in the APA). Today's rule simply codifies provisions which are already in effect as a matter of law in Federal and approved State programs. Under section 553 of the APA, an agency may find good cause where procedures are ''impractical, unnecessary, or contrary to the public interest.'' Public comment is ''unnecessary'' and ''contrary to the public interest'' since the codification only reflects existing law. Immediate notice in the CFR benefits the public by updating citations.

**Statutory and Executive Order Reviews**

Under Executive Order 12866 (58 FR 51735, October 4, 1993), this action is not a ''significant regulatory action'' and therefore is not subject to review by the Office of Management and Budget. For this reason, this action is also not subject to Executive Order 13211, ''Actions Concerning Regulations That Significantly Affect Energy Supply, Distribution, or Use'' (66 FR 28355, May 22, 2001). This action merely approves state law as meeting Federal requirements and imposes no additional requirements beyond those imposed by state law. Accordingly, the Administrator certifies that this rule will not have a significant economic impact on a substantial number of small entities under the Regulatory Flexibility Act (5 U.S.C. 601 *et seq.*). Because this rule approves pre-existing requirements under state law and does not impose any additional enforceable duty beyond that required by state law, it does not contain any unfunded mandate or significantly or uniquely affect small governments, as described in the Unfunded Mandates Reform Act of 1995 (Pub. L. 104–4).

This rule also does not have tribal implications because it will not have a substantial direct effect on one or more Indian tribes, on the relationship between the Federal Government and Indian tribes, or on the distribution of power and responsibilities between the Federal Government and Indian tribes, as specified by Executive Order 13175 (65 FR 67249, November 9, 2000). This action also does not have Federalism implications because it does not have substantial direct effects on the States, on the relationship between the national government and the States, or on the distribution of power and responsibilities among the various levels of government, as specified in Executive Order 13132 (64 FR 43255, August 10, 1999). This action merely approves a state rule implementing a Federal standard, and does not alter the relationship or the distribution of power and responsibilities established in the Clean Air Act. This rule also is not subject to Executive Order 13045, ''Protection of Children from Environmental Health Risks and Safety Risks'' (62 FR 19885, April 23, 1997), because it is not economically significant.

In reviewing SIP submissions, EPA's role is to approve state choices, provided that they meet the criteria of the Clean Air Act. In this context, in the absence of a prior existing requirement for the State to use voluntary consensus standards (VCS), EPA has no authority to disapprove a SIP submission for failure to use VCS. It would thus be inconsistent with applicable law for EPA, when it reviews a SIP submission, to use VCS in place of a SIP submission that otherwise satisfies the provisions of the Clean Air Act. Thus, the requirements of section 12(d) of the National Technology Transfer and Advancement Act of 1995 (15 U.S.C. 272 note) do not apply. This rule does not impose an information collection burden under the provisions of the Paperwork Reduction Act of 1995 (44 U.S.C. 3501 *et seq.*).

The Congressional Review Act, 5 U.S.C. 801 *et seq.*, as added by the Small Business Regulatory Enforcement Fairness Act of 1996, generally provides that before a rule may take effect, the agency promulgating the rule must submit a rule report, which includes a copy of the rule, to each House of the Congress and to the Comptroller General of the United States. EPA will submit a report containing this rule and other required information to the U.S. Senate, the U.S. House of Representatives, and the Comptroller General of the United States prior to publication of the rule in the **Federal Register**. A major rule cannot take effect until 60 days after it is published in the **Federal Register**. This action is not a ''major rule'' as defined by 5 U.S.C. 804(2).

Under section 307(b)(1) of the Clean Air Act, petitions for judicial review of this action must be filed in the United States Court of Appeals for the appropriate circuit by January 30, 2004. Filing a petition for reconsideration by the Administrator of this final rule does not affect the finality of this rule for the purposes of judicial review nor does it extend the time within which a petition for judicial review may be filed, and shall not postpone the effectiveness of such rule or action. This action may not be challenged later in proceedings to enforce its requirements. (*See* section 307(b)(2).)

**List of Subjects 40 CFR Part 52**

Environmental protection, Air pollution control, Carbon monoxide, Incorporation by reference, Intergovernmental relations, Lead, Nitrogen dioxide, Ozone, Particulate matter, Reporting and recordkeeping requirements, Sulfur oxides, Volatile organic compounds.

Dated: November 17, 2003.

**Martha R. Steincamp,**

*Acting Regional Administrator, Region 7.*

■ Chapter I, title 40, Code of Federal Regulations, is amended as follows:

## PART 52—[AMENDED]

■ 1. The authority for citation for part 52 continues to read as follows:

**Authority:** 42 U.S.C. 7401 *et seq.*

## Subpart CC—Nebraska

■ 2. In § 52.1420 paragraphs (b), (c), (d) and (e) are revised to read as follows:

### § 52.1420 Identification of plan.

* * * * *

(b) *Incorporation by reference.* (1) Material listed in paragraphs (c), (d) and (e) of this section with an EPA approval date prior to November 5, 2003, was approved for incorporation by reference by the Director of the Federal Register in accordance with 5 U.S.C. 552(a) and 1 CFR part 51. Material is incorporated as it exists on the date of the approval, and notice of any change in the material will be published in the **Federal Register**. Entries in paragraphs (c), (d) and (e) of this section with EPA approval dates after November 5, 2003, will be incorporated by reference in the next update to the SIP compilation.

(2) EPA Region VII certifies that the rules/regulations provided by EPA in the SIP compilation at the addresses in paragraph (b)(3) are an exact duplicate of the officially promulgated state rules/regulations which have been approved as part of the SIP as of November 5, 2003.

(3) Copies of the materials incorporated by reference may be inspected at the Environmental Protection Agency, Region VII, Air Planning and Development Branch, 901 North 5th Street, Kansas City, Kansas 66101; the Office of the Federal Register, 800 North Capitol Street, NW., Suite 700, Washington, DC.; or at the EPA, Air and Radiation Docket and Information Center, Room B–108, 1301 Constitution Avenue, NW. (Mail Code 6102T), Washington, DC 20460.

(c) EPA-approved regulations.

EPA-APPROVED NEBRASKA REGULATIONS

| Nebraska citation | Title | State effective date | EPA approval date | Explanation |
|---|---|---|---|---|
| | **STATE OF NEBRASKA Department of Environmental Quality** | | | |
| | **Title 129—Nebraska Air Quality Regulations** | | | |
| 129–1 | Definitions | 11/20/02 | 09/05/03, 68 FR 52694. | |
| 129–2 | Definition of Major Source | 07/10/02 | 07/08/03, 68 FR 40530. | |
| 129–3 | Region and Subregions | 6/26/94 | 1/04/95, 60 FR 372. | |
| 129–4 | Ambient Air Quality Standards | 04/01/02<br>07/10/02 | 07/08/03, 68 FR 40530. | |
| 129–5 | Operating Permit | 11/20/02 | 09/05/03, 68 FR 52694 | Section 001.02 is not SIP approved. |
| 129–6 | Emissions Reporting | 11/20/02 | 09/05/03, 68 FR 52694. | |
| 129–7 | Operating Permits—Application | 8/22/2000 | 5/29/02, 67 FR 37327. | |
| 129–8 | Operating Permit Content | 8/22/2000 | 5/29/02, 67 FR 37327. | |
| 129–9 | General Operating Permits for Class I and II Sources. | 5/29/95 | 10/18/95, 60 FR 53872. | |
| 129–10 | Operating Permits for Temporary Sources. | 9/7/97 | 1/20/00, 65 FR 3134. | |
| 129–11 | Operating Permits—Emergency; Defense. | 5/29/95 | 10/18/95, 60 FR 53872. | |
| 129–12 | Operating Permit Renewal and Expiration. | 5/29/95 | 2/09/96, 61 FR 4899. | |
| 129–13 | Class I Operating Permit—EPA Review; Affected States Review; Class II Permit. | 5/29/95 | 10/18/95, 60 FR 53872. | |
| 129–14 | Permits—Public Participation | 5/29/95 | 10/18/95, 60 FR 53872. | |
| 129–15 | Operating Permit Modification; Reopening for Cause. | 5/29/95 | 10/18/95, 60 FR 53872. | |
| 129–16 | Stack Heights; Good Engineering Practice (GEP). | 12/15/1998 | 5/29/02, 67 FR 37327. | |
| 129–17 | Construction Permits—When Required. | 07/10/02 | 07/08/03, 68 FR 40530 | Refer to January 23, 2002, NDEQ letter to EPA regarding change to 129–17–014. Approved by EPA on May 29, 2002. |
| 129–19 | Prevention of Significant Deterioration of Air Quality. | 12/15/1998 | 5/29/02, 67 FR 37327 | |
| 129–20 | Particulate Emissions; Limitations and Standards (Exceptions Due to Breakdowns or Scheduled Maintenance: See Chapter 35). | 04/01/02<br>07/10/02 | 07/08/03, 68 FR 40530. | |
| 129–21 | Controls for Transferring, Conveying, Railcar and Truck Loading at Rock Processing Operations in Cass County. | 07/10/02 | 07/08/03, 68 FR 40530 | |
| 129–22 | Incinerators; Emission Standards | 9/7/97 | 1/20/00, 65 FR 3134 | |
| 129–24 | Sulfur Compound Emissions, Existing Sources Emission Standards. | 6/26/94 | 1/04/95, 60 FR 372 | |
| 129–25 | Nitrogen Oxides (Calculated as Nitrogen Dioxide); Emissions Standards for Existing Stationary Sources. | 9/7/97 | 1/20/00, 65 FR 3134 | |
| 129–30 | Open Fires, Prohibited; Exceptions | 11/20/02 | 09/05/03, 68 FR 52694 | |
| 129–32 | Dust; Duty to Prevent Escape of | 6/26/94 | 1/04/95, 60 FR 372 | |
| 129–33 | Compliance; Time Schedule for | 6/26/94 | 1/04/95, 60 FR 372 | |
| 129–34 | Emission Sources; Testing; Monitoring. | 8/22/2000 | 5/29/02, 67 FR 37327 | |

EPA-APPROVED NEBRASKA REGULATIONS—Continued

| Nebraska citation | Title | State effective date | EPA approval date | Explanation |
|---|---|---|---|---|
| 129–35 | Compliance; Exceptions Due to Startup, Shutdown, or Malfunction. | 9/7/97 | 1/20/00, 65 FR 3134 | |
| 129–36 | Control Regulations; Circumvention, When Excepted. | 6/26/94 | 1/04/95, 60 FR 372 | |
| 129–37 | Compliance; Responsibility | 6/26/94 | 1/04/95, 60 FR 372 | |
| 129–38 | Emergency Episodes; Occurrence and Control, Contingency Plans. | 6/26/94 | 1/04/95, 60 FR 372 | |
| 129–39 | Visible Emissions from Diesel-powered Motor Vehicles. | 6/26/94 | 1/04/95, 60 FR 372 | |
| 129–40 | General Conformity | 5/29/95 | 2/12/96, 61 FR 5297 | |
| 129–41 | General Provision | 12/15/1998 | 5/29/02, 67 FR 37327. | |
| 129–42 | Consolidated with Chapter 41 | 5/29/95 | 2/09/96, 61 FR 4899. | |
| 129–43 | Consolidated with Chapter 41 | 5/29/95 | 2/09/96, 61 FR 4899. | |
| 129–44 | Consolidated with Chapter 41 | 5/29/95 | 2/09/96, 61 FR 4899. | |
| Appendix I | Emergency Emission Reductions | 6/26/94 | 1/04/94, 60 FR 372. | |
| Appendix II | Hazardous Air Pollutants (HAPS) | 9/7/97 | 1/20/00, 65 FR 3134. | |
| **Title 115—Rules of Practice and Procedure** | | | | |
| 115–1 | Definitions of Terms | 8/08/93 | 1/04/95, 60 FR 372. | |
| 115–2 | Filing and Correspondence | 8/08/93 | 1/04/95, 60 FR 372. | |
| 115–3 | Public Records Availability | 8/08/93 | 1/04/95, 60 FR 372. | |
| 115–4 | Public Records Confidentiality | 8/08/93 | 1/04/95, 60 FR 372. | |
| 115–5 | Public Hearings | 8/08/93 | 1/04/95, 60 FR 372. | |
| 115–6 | Voluntary Compliance | 8/08/93 | 1/04/95, 60 FR 372. | |
| 115–7 | Contested Cases | 8/08/93 | 1/04/95, 60 FR 372. | |
| 115–8 | Emergency Proceeding Hearings | 8/08/93 | 1/04/95, 60 FR 372. | |
| 115–9 | Declaratory Rulings | 8/08/93 | 1/04/95, 60 FR 372. | |
| 115–10 | Rulemaking | 8/08/93 | 1/04/95, 60 FR 372. | |
| 115–11 | Variances | 8/08/93 | 1/04/95, 60 FR 372. | |
| **Lincoln-Lancaster County Air Pollution Control Program Article 1—Administration and Enforcement** | | | | |
| Section 1 | Intent | 5/16/95 | 2/14/96, 61 FR 5701. | |
| Section 2 | Unlawful Acts—Permits Required | 5/16/95 | 2/14/96, 61 FR 5701. | |
| Section 3 | Violations—Hearing—Orders | 5/16/95 | 2/14/96, 61 FR 5701. | |
| Section 4 | Appeal Procedure | 5/16/95 | 2/14/96, 61 FR 5701. | |
| Section 5 | Variance | 5/16/95 | 2/14/96, 61 FR 5701. | |
| Section 7 | Compliance—Actions to Enforce—Penalties for Non-Compliance. | 5/16/95 | 2/14/96, 61 FR 5701. | |
| Section 8 | Procedure for Abatement | 5/16/95 | 2/14/96, 61 FR 5701. | |
| Section 9 | Severability | 5/16/95 | 2/14/96, 61 FR 5701. | |
| **Article 2—Regulations and Standards** | | | | |
| Section 1 | Definitions | 8/11/98 | 1/20/00, 65 FR 3134. | |
| Section 2 | Major Sources—Defined | 8/11/98 | 1/20/00, 65 FR 3134. | |
| Section 4 | Ambient Air Quality Standards | 5/16/95 | 2/14/96, 61 FR 5701. | |
| Section 5 | Operating Permits—When Required | 8/11/98 | 1/20/00, 65 FR 3134. | |
| Section 6 | Emissions Reporting—When Required. | 8/11/98 | 1/20/00, 65 FR 3134. | |
| Section 7 | Operating Permits—Application | 8/11/98 | 1/20/00, 65 FR 3135. | |
| Section 8 | Operating Permit—Content | 8/11/98 | 1/20/00, 65 FR 3135 | |
| Section 9 | General Operating Permits for Class I and II Sources. | 5/16/95 | 2/14/96, 61 FR 5701 | |
| Section 10 | Operating Permits for Temporary Services. | 5/16/95 | 2/14/96, 61 FR 5701 | |
| Section 11 | Emergency Operating Permits—Defense. | 5/16/95 | 2/14/96, 61 FR 5701 | |
| Section 12 | Operating Permit Renewal and Expiration. | 5/16/95 | 2/14/96, 61 FR 5701 | |
| Section 14 | Permits—Public Participation | 5/16/95 | 2/14/96, 61 FR 5701 | |
| Section 15 | Operating Permit Modifications—Reopening for Cause. | 8/11/98 | 1/20/00, 65 FR 3135 | |
| Section 16 | Stack—Heights—Good Engineering Practice (GEP). | 5/16/95 | 2/14/96, 61 FR 5701 | |
| Section 17 | Construction Permits—When Required. | 8/11/98 | 1/20/00, 65 FR 3135 | |
| Section 19 | Prevention of Significant Deterioration of Air Quality. | 5/16/95 | 2/14/96, 61 FR 5701 | |
| Section 20 | Particulate Emissions—Limitations and Standards. | 3/31/97 | 1/20/00, 65 FR 3135 | |

EPA-APPROVED NEBRASKA REGULATIONS—Continued

| Nebraska citation | Title | State effective date | EPA approval date | Explanation |
|---|---|---|---|---|
| Section 22 | Incinerator Emissions | 5/16/95 | 2/14/96, 61 FR 5701 | |
| Section 24 | Sulfur Compound Emissions—Existing Sources—Emission Standards. | 5/16/95 | 2/14/96, 61 FR 5701 | |
| Section 25 | Nitrogen Oxides (Calculated as Nitrogen Dioxide)—Emissions Standards for Existing Stationary Sources. | 5/16/95 | 2/14/96, 61 FR 5701 | |
| Section 32 | Dust—Duty to Prevent Escape of | 3/31/97 | 1/20/00, 65 FR 3135 | |
| Section 33 | Compliance—Time Schedule for | 5/16/95 | 2/14/96, 61 FR 5701 | |
| Section 34 | Emission Sources—Testing—Monitoring. | 5/16/95 | 2/14/96, 61 FR 5701 | |
| Section 35 | Compliance—Exceptions Due to Startup Shutdown or Malfunction. | 5/16/95 | 2/14/96, 61 FR 5701 | |
| Section 36 | Control Regulations—Circumvention—When Expected. | 5/16/95 | 2/14/96, 61 FR 5701 | |
| Section 37 | Compliance—Responsibility of Owner/Operator Pending Review by Director. | 5/16/95 | 2/14/96, 61 FR 5701 | |
| Section 38 | Emergency Episodes—Occurrence and Control— Contingency Plans. | 5/16/95 | 2/14/96, 61 FR 5701 | |
| Appendix | Emergency Emission Reduction Regulations. | 5/16/95 | 2/14/96, 61 FR 5701 | |
| **City of Omaha Chapter 41—Air Quality Control Article I In General** | | | | |
| 41–2 | Adoption of State Regulations with Exceptions. | 4/1/98 | 1/20/00, 65 FR 3135. | |
| 41–4 | Enforcement—Generally | 5/29/95 | 2/14/96, 61 FR 5701. | |
| 41–5 | Same Health Department | 5/29/95 | 2/14/96, 61 FR 5701. | |
| 41–6 | Residential Exemptions | 5/29/95 | 2/14/96, 61 FR 5701. | |
| 41–9 | Penalties | 5/29/95 | 2/14/96, 61 FR 5701. | |
| 41–10 | Civil Enforcement | 5/29/95 | 2/14/96, 61 FR 5701. | |
| **Article II—Permitting of Air Contaminant Sources** | | | | |
| 41–23 | Prerequisite to Approval | 5/29/95 | 2/14/96, 61 FR 5701. | |
| 41–27 | Signature Required; Guarantee | 5/29/95 | 2/14/96, 61 FR 5701. | |
| 41–38 | Funds | 5/29/95 | 2/14/96, 61 FR 5701. | |
| 41–40 | Fees—When Delinquent | 5/29/95 | 2/14/96, 61 FR 5701. | |
| **Article IV—Waste Incinerators Division 1. Generally** | | | | |
| 41–60 | Definitions | 5/29/95 | 2/14/96, 61 FR 5701. | |
| 41–61 | Violations | 5/29/95 | 2/14/96, 61 FR 5701. | |
| **Article IV—Waste Incinerators Division 2. Emissions** | | | | |
| 41–70 | New or Modified Facilities | 5/29/95 | 2/14/96, 61 FR 5701. | |
| 41–71 | Existing Facilities | 5/29/95 | 2/14/96, 61 FR 5701. | |
| 41–72 | Emission Testing | 5/29/95 | 2/14/96, 61 FR 5701. | |
| **Article IV—Waste Incinerators Division 3. Design** | | | | |
| 41–80 | New or Modified Waste Incinerators | 5/29/95 | 2/14/96, 61 FR 5701. | |
| 41–81 | Existing Incinerators | 5/29/95 | 2/14/96, 61 FR 5701. | |

(d) EPA-approved state source-specific permits.

EPA-APPROVED NEBRASKA SOURCE—SPECIFIC PERMITS

| Name of source | Permit No. | State effective date | EPA approval date | Explanation |
|---|---|---|---|---|
| (1) Gould, Inc. | 677 | 11/9/83 | 1/31/85, 50 FR 4510. | |

EPA-APPROVED NEBRASKA SOURCE—SPECIFIC PERMITS—Continued

| Name of source | Permit No. | State effective date | EPA approval date | Explanation |
|---|---|---|---|---|
| (2) Asarco, Inc. | 1520 | 6/6/96 | 3/20/97, 62 FR 13329 | The EPA did not approve paragraph 19. |

(e) EPA-approved nonregulatory provisions and quasi-regulatory measures.

EPA-APPROVED NEBRASKA NONREGULATORY PROVISIONS

| Name of nonregulatory SIP provision | Applicable geographic or nonattainment area | State submittal date | EPA approval date | Explanation |
|---|---|---|---|---|
| (1) Air Quality Implementation Plan | Statewide | 1/28/72 | 5/31/72, 37 FR 10842. | |
| (2) Confirmation That the State Does Not Have Air Quality Control Standards Based on Attorney General's Disapproval.. | Statewide | 4/25/72 | 5/31/72, 37 FR 10842. | |
| (3) Request for Two-Year Extension to Meet the Primary $NO_X$ Standard.. | Omaha | 1/24/72 | 7/27/72, 37 FR 15080. | |
| (4) Clarification of Section 11 of the State's Plan.. | Statewide | 2/16/72 | 7/27/72, 37 FR 15080. | |
| (5) Letters Clarifying the Application of the States Emergency Episode Rule.. | Omaha | 10/2/72 | 5/14/73, 38 FR 12696. | |
| (6) Analysis of Ambient Air Quality in Standard Metropolitan Statistical Areas and Recommendations for Air Quality Maintenance Areas. | Omaha, Lincoln, Sioux City. | 5/9/74 | 6/2/75, 40 FR 23746. | |
| (7) Amended State Law (LB1029) Giving the Department of Environmental Quality Authority to Require Monitoring of Emissions, Reporting of Emissions and Release of Emissions Data. | Statewide | 2/10/76 | 6/23/76, 41 FR 25898. | |
| (8) Air Monitoring Plan | Statewide | 6/19/81 | 10/6/81, 46 FR 49122. | |
| (9) TSP Nonattainment Plan | Douglas and Cass Counties. | 9/25/80<br>8/9/82 | 3/28/83, 48 FR 12715. | |
| (10) Plan for Intergovernmental Consultation and Coordination and for Public Notification.. | Statewide | 8/9/82 | 7/5/83, 48 FR 30631. | |
| (11) Lead Plan | Statewide except Omaha. | 1/9/81<br>8/5/81<br>1/11/83 | 11/29/83, 48 FR 53697. | The plan was approved except that portion pertaining to Omaha. |
| (12) Lead Nonattainment Plan | Omaha | 7/24/84<br>11/17/83<br>8/1/84 | 1/31/85, 50 FR 4510. | |
| (13) CO Nonattainment Plan | Omaha | 4/3/85 | 9/15/86, 51 FR 32640. | |
| (14) CO Nonattainment Plan | Lincoln | 4/3/85 | 9/19/86, 51 FR 33264. | |
| (15) Revised Lead Nonattainment Plan | Omaha | 2/2/87 | 8/3/87, 52 FR 28694. | |
| (16) Letter Pertaining to $NO_X$ Rules and Analysis Which Certifies the Material Became Effective on February 20, 1991.. | Statewide | 3/8/91 | 7/2/91, 56 FR 30335. | State submittal date is date of the letter. |
| (17) Small Business Assistance Program | Statewide | 11/12/92 | 8/30/93, 58 FR 45452. | |
| (18) Class II Operating Permit Program Including Letter Committing to Submit Information to RACT/BACT/LAER Clearinghouse, Letter Regarding Availability of State Operating Permits to the EPA and Specified Emissions Limits in Permits, and Letter Regarding the Increase in New Source Review Thresholds.. | Statewide | 2/16/94 | 1/4/95, 60 FR 372. | |

EPA-APPROVED NEBRASKA NONREGULATORY PROVISIONS—Continued

| Name of nonregulatory SIP provision | Applicable geographic or nonattainment area | State submittal date | EPA approval date | Explanation |
|---|---|---|---|---|
| (19) Letter from City of Omaha Regarding Authority to Implement Section 112(l) and Letter from the State Regarding Rule Omissions and PSD Program Implementation.. | Omaha, Lincoln ..... | 9/13/95, 11/9/95 | 2/14/96, 61 FR 5725. | State submittal dates are dates of letters. |
| (20) Lincoln Municipal Code, Chapter 8.06.140 and 8.06.145.. | City of Lincoln ..... | 2/5/99 | 1/20/00, 65 FR 3135. | |
| (21) Lancaster Co. Resolution 5069, Sections 12 and 13.. | Lancaster County ... | 2/5/99 | 1/20/00, 65 FR 3135. | |
| (22) Nebraska Lead Maintenance SIP ..... | Omaha ..... | 1/18/01 | 4/20/01, 66 FR 20199. | |

[FR Doc. 03–29692 Filed 11–28–03; 8:45 am]
BILLING CODE 6560–50–P

## DEPARTMENT OF HOMELAND SECURITY

### Federal Emergency Management Agency

### 44 CFR Part 64

**[Docket No. FEMA–7821]**

### Suspension of Community Eligibility

**AGENCY:** Federal Emergency Management Agency, Emergency Preparedness and Response Directorate, Department of Homeland Security.

**ACTION:** Final rule.

**SUMMARY:** This rule identifies communities, where the sale of flood insurance has been authorized under the National Flood Insurance Program (NFIP), that are suspended on the effective dates listed within this rule because of noncompliance with the floodplain management requirements of the program. If the Federal Emergency Management Agency (FEMA) receives documentation that the community has adopted the required floodplain management measures prior to the effective suspension date given in this rule, the suspension will be withdrawn by publication in the **Federal Register**.

**EFFECTIVE DATES:** The effective date of each community's suspension is the third date (''Susp.'') listed in the third column of the following tables.

**ADDRESSES:** If you wish to determine whether a particular community was suspended on the suspension date, contact the appropriate FEMA Regional Office or the NFIP servicing contractor.

**FOR FURTHER INFORMATION CONTACT:** Mike Grimm, Mitigation Division, 500 C Street, SW.; Room 412, Washington, DC 20472, (202) 646–2878.

**SUPPLEMENTARY INFORMATION:** The NFIP enables property owners to purchase flood insurance which is generally not otherwise available. In return, communities agree to adopt and administer local floodplain management aimed at protecting lives and new construction from future flooding. Section 1315 of the National Flood Insurance Act of 1968, as amended, 42 U.S.C. 4022, prohibits flood insurance coverage as authorized under the National Flood Insurance Program, 42 U.S.C. 4001 *et seq.*; unless an appropriate public body adopts adequate floodplain management measures with effective enforcement measures. The communities listed in this document no longer meet that statutory requirement for compliance with program regulations, 44 CFR part 59 *et seq.* Accordingly, the communities will be suspended on the effective date in the third column. As of that date, flood insurance will no longer be available in the community. However, some of these communities may adopt and submit the required documentation of legally enforceable floodplain management measures after this rule is published but prior to the actual suspension date. These communities will not be suspended and will continue their eligibility for the sale of insurance. A notice withdrawing the suspension of the communities will be published in the **Federal Register**.

In addition, the Federal Emergency Management Agency has identified the special flood hazard areas in these communities by publishing a Flood Insurance Rate Map (FIRM). The date of the FIRM if one has been published, is indicated in the fourth column of the table. No direct Federal financial assistance (except assistance pursuant to the Robert T. Stafford Disaster Relief and Emergency Assistance Act not in connection with a flood) may legally be provided for construction or acquisition of buildings in the identified special flood hazard area of communities not participating in the NFIP and identified for more than a year, on the Federal Emergency Management Agency's initial flood insurance map of the community as having flood-prone areas (section 202(a) of the Flood Disaster Protection Act of 1973, 42 U.S.C. 4106(a), as amended). This prohibition against certain types of Federal assistance becomes effective for the communities listed on the date shown in the last column. The Administrator finds that notice and public comment under 5 U.S.C. 553(b) are impracticable and unnecessary because communities listed in this final rule have been adequately notified.

Each community receives a 6-month, 90-day, and 30-day notification addressed to the Chief Executive Officer that the community will be suspended unless the required floodplain management measures are met prior to the effective suspension date. Since these notifications have been made, this final rule may take effect within less than 30 days.

*National Environmental Policy Act.* This rule is categorically excluded from the requirements of 44 CFR Part 10, Environmental Considerations. No environmental impact assessment has been prepared.

*Regulatory Flexibility Act.* The Administrator has determined that this rule is exempt from the requirements of the Regulatory Flexibility Act because the National Flood Insurance Act of 1968, as amended, 42 U.S.C. 4022, prohibits flood insurance coverage unless an appropriate public body adopts adequate floodplain management measures with effective enforcement measures. The communities listed no longer comply with the statutory requirements, and after the effective date, flood insurance will no longer be available in the communities unless they take remedial action.

*Regulatory Classification*. This final rule is not a significant regulatory action under the criteria of section 3(f) of Executive Order 12866 of September 30, 1993, Regulatory Planning and Review, 58 FR 51735.

*Paperwork Reduction Act*. This rule does not involve any collection of information for purposes of the Paperwork Reduction Act, 44 U.S.C. 3501 *et seq.*

*Executive Order 12612, Federalism.* This rule involves no policies that have federalism implications under Executive Order 12612, Federalism, October 26, 1987, 3 CFR, 1987 Comp.; p. 252.

*Executive Order 12778, Civil Justice Reform*. This rule meets the applicable standards of section 2(b)(2) of Executive Order 12778, October 25, 1991, 56 FR 55195, 3 CFR, 1991 Comp.; p. 309.

**List of Subjects in 44 CFR Part 64**

Flood insurance, Floodplains.

■ Accordingly, 44 CFR part 64 is amended as follows:

## PART 64—[AMENDED]

■ 1. The authority citation for Part 64 continues to read as follows:

**Authority:** 42 U.S.C. 4001 et seq.; Reorganization Plan No. 3 of 1978, 3 CFR, 1978 Comp.; p. 329; E.O. 12127, 44 FR 19367, 3 CFR, 1979 Comp.; p. 376.

### § 64.6 [Amended]

■ 2. The tables published under the authority of § 64.6 are amended as follows:

| State and location | Community No. | Effective date authorization/cancellation of sale of flood insurance in community | Current effective map date | Date certain Federal assistance no longer available in special flood hazard areas |
|---|---|---|---|---|
| Region V: | | | | |
| Ohio: Medina County, Unincorporated Areas. | 390378 | September 6, 1978, Emerg.; August 15, 1983, Reg.; December 2, 2003, Susp. | 12/2/2003 | 12/2/2003 |
| Region VII: | | | | |
| Kansas: Gridley, City of, Coffey County. | 200064 | April 4, 2001, Emerg.; December 2, 2003, Reg.; December 2, 2003, Susp. | -do-* | -do- |
| Region III: | | | | |
| Pennsylvania: College, Township of, Centre County. | 420259 | April 19, 1973, Emerg.; July 4, 1989, Reg.; December 16, 2003, Susp. | 12/16/2003 | 12/16/2003 |
| Harris, Township of, Centre County. | 420262 | June 6, 1973, Emerg.; June 5, 1989, Reg.; December 16, 2003, Sus.. | -do- | -do- |

*-do- = Ditto.
Code for reading third column: Emerg. = Emergency; Reg. = Regular; Susp. = Suspension.

**Anthony S. Lowe,**

*Mitigation Division Director, Emergency Preparedness and Response Directorate.*

[FR Doc. 03–29797 Filed 11–28–03; 8:45 am]

BILLING CODE 9110–12–P

## DEPARTMENT OF HOMELAND SECURITY

## Federal Emergency Management Agency

## 44 CFR Part 65

**[Docket No. FEMA–D–7547]**

## Changes in Flood Elevation Determinations

**AGENCY:** Federal Emergency Management Agency (FEMA), Emergency Preparedness and Response Directorate, Department of Homeland Security.

**ACTION:** Interim rule.

**SUMMARY:** This interim rule lists communities where modification of the Base (1% annual chance) Flood Elevations (BFEs) is appropriate because of new scientific or technical data. New flood insurance premium rates will be calculated from the modified BFEs for new buildings and their contents.

**DATES:** These modified BFEs are currently in effect on the dates listed in the table and revise the Flood Insurance Rate Map(s) (FIRMs) in effect prior to this determination for each listed community.

From the date of the second publication of these changes in a newspaper of local circulation, any person has ninety (90) days in which to request through the community that the Director reconsider the changes. The modified elevations may be changed during the 90-day period.

**ADDRESSES:** The modified BFEs for each community are available for inspection at the office of the Chief Executive Officer of each community. The respective addresses are listed in the table below.

**FOR FURTHER INFORMATION CONTACT:** Doug Bellomo, P.E., Hazard Identification Section, Emergency Preparedness and Response Directorate, FEMA, 500 C Street, SW., Washington, DC 20472, (202) 646–2903.

**SUPPLEMENTARY INFORMATION:** The modified BFEs are not listed for each community in this interim rule. However, the address of the Chief Executive Officer of the community where the modified BFE determinations are available for inspection is provided.

Any request for reconsideration must be based upon knowledge of changed conditions, or upon new scientific or technical data.

The modifications are made pursuant to Section 201 of the Flood Disaster Protection Act of 1973, 42 U.S.C. 4105, and are in accordance with the National Flood Insurance Act of 1968, 42 U.S.C. 4001 *et seq.*, and with 44 CFR part 65.

For rating purposes, the currently effective community number is shown and must be used for all new policies and renewals.

The modified BFEs are the basis for the floodplain management measures that the community is required to either adopt or to show evidence of being already in effect in order to qualify or to remain qualified for participation in the National Flood Insurance Program (NFIP).

These modified elevations, together with the floodplain management criteria required by 44 CFR 60.3, are the minimum that are required. They should not be construed to mean that the community must change any existing ordinances that are more stringent in their floodplain management requirements. The community may at any time enact stricter requirements of its own, or

pursuant to policies established by other Federal, state or regional entities.

The changes in BFEs are in accordance with 44 CFR 65.4.

*National Environmental Policy Act.* This rule is categorically excluded from the requirements of 44 CFR Part 10, Environmental Consideration. No environmental impact assessment has been prepared.

*Regulatory Flexibility Act.* The Mitigation Division Director of the Emergency Preparedness and Response Directorate certifies that this rule is exempt from the requirements of the Regulatory Flexibility Act because modified BFEs are required by the Flood Disaster Protection Act of 1973, 42 U.S.C. 4105, and are required to maintain community eligibility in the NFIP. No regulatory flexibility analysis has been prepared.

*Regulatory Classification.* This interim rule is not a significant regulatory action under the criteria of Section 3(f) of Executive Order 12866 of September 30, 1993, Regulatory Planning and Review, 58 FR 51735.

*Executive Order 12612, Federalism.* This rule involves no policies that have federalism implications under Executive Order 12612, Federalism, dated October 26, 1987.

*Executive Order 12778, Civil Justice Reform.* This rule meets the applicable standards of Section 2(b)(2) of Executive Order 12778.

**List of Subjects in 44 CFR Part 65**

Flood insurance, floodplains, reporting and recordkeeping requirements.

■ Accordingly, 44 CFR Part 65 is amended to read as follows:

## PART 65—[AMENDED]

■ 1. The authority citation for Part 65 continues to read as follows:

**Authority:** 42 U.S.C. 4001 *et seq.*; Reorganization Plan No. 3 of 1978, 3 CFR, 1978 Comp., p. 329; E.O. 12127, 44 FR 19367, 3 CFR, 1979 Comp., p. 376.

### § 65.4 [Amended]

■ 2. The tables published under the authority of § 65.4 are amended as follows:

| State and county | Location | Dates and name of newspaper where notice was published | Chief executive officer of community | Effective date of modification | Community number |
|---|---|---|---|---|---|
| Alabama: | | | | | |
| Houston | City of Dothan | July 18, 2003, July 25, 2003; *The Dothan Eagle*. | The Honorable Chester L. Sowell, III, Mayor of the City of Dothan, P.O. Box 2128, Dothan, Alabama 36302. | July 10, 2003 | 010104 E |
| Tuscaloosa | City of Northport | September 19, 2003, September 26, 2003; *The Tuscaloosa News*. | The Honorable Harvey Fretwell, Mayor of the City of Northport, P.O. Box 569, Northport, Alabama 35476. | December 26, 2003 | 010202 E |
| Tuscaloosa | City of Tuscaloosa. | September 19, 2003, September 26, 2003; *The Tuscaloosa News*. | The Honorable Alvin P. Dupont, Mayor of the City of Tuscaloosa, P.O. Box 2089, Tuscaloosa, Alabama 35403. | December 26, 2003 | 010203 E |
| Connecticut: | | | | | |
| Fairfield | Town of Greenwich. | September 12, 2003, September 19, 2003; *Greenwich Time*. | Mr. Richard V. Bergstresser, Town of Greenwich First Selectman, Greenwich Town Hall, 101 Field Point Road, Greenwich, Connecticut 06830. | September 5, 2003 | 090008 C |
| Fairfield | Town of Greenwich. | September 29, 2003, October 6, 2003; *Greenwich Time*. | Mr. Richard V. Bergstresser, Town of Greenwich First Selectman, Greenwich Town Hall, 101 Field Point Road, Greenwich, Connecticut 06830. | September 22, 2003 | 090008 C |
| New Havan | Town of Madison | September 12, 2003, September 19, 2003; *The Hartford Courant*. | Mr. Thomas S. Scarpati, Town of Madision First Selectman, Town Hall, 8 Campus Drive, Madison, Connecticut 06443. | December 19, 2003 | 090079 D |
| Windham | Town of Windham. | August 11, 2003, August 18, 2003; *The Chronicle*. | Mr. Michael Paulhaus, Town of Windham First Selectman, 979 Main Street, Willimantic, Connecticut 06226–2200. | August 4, 2003 | 090119 D |
| Delaware: | | | | | |
| New Castle | Unincorporated Areas. | July 24, 2003, July 31, 2003; *The News Journal*. | Mr. Thomas P. Gordon, New Castle County Executive, New Castle County Government Center, 87 Reads Way, New Castle, Delaware 19720. | October 30, 2003 | 105085 G |
| Florida: | | | | | |
| Orange | Unincorporated Areas. | July 18, 2003, July 25, 2003; *Orlando Sentinel*. | M. Krishnamurthy, Ph.D., P.E., Orange County Stormwater Management Manager, 4200 South John Young Parkway, Orlando, Florida 32839. | July 10, 2003 | 120179 E |
| Osceola | Unincorporated Areas. | September 15, 2003, September 22, 2003; *The Ledger*. | Mr. Edwin E. Hunzeker, Osceola County Manager, 1 Courthouse Square, Suite 4700, Kissimmee, Florida 34741–5488. | December 22, 2003, | 120189 F |

| State and county | Location | Dates and name of newspaper where notice was published | Chief executive officer of community | Effective date of modification | Community number |
|---|---|---|---|---|---|
| Polk | Unincorporated Areas. | September 15, 2003, September 22, 2003; *The Ledger*. | Mr. Jim W. Keene, Polk County Manager, 330 West Church Street, P.O. Box 9005, Drawer CA01, Bartow, Florida 33831–9005. | December 22, 2003 | 120261 F |
| Georgia: | | | | | |
| Cobb | Unincorporated Areas. | August 1, 2003, August 8, 2003; *Marietta Daily Journal*. | Mr. Samuel S. Owens, Chairman of the Cobb County Board of Commissioners, 100 Cherokee Street, Suite 300, Marietta, Georgia 30090–9680. | July 15, 2003 | 130052 F |
| Cobb | Unincorporated Areas. | August 1, 2003, August 8, 2003; *Marietta Daily Journal*. | Mr. Samuel S. Olens, Chairman of the Cobb County Board of Commissioners, 100 Cherokee Street, Marietta, Georgia 30090–9680. | November 7, 2003 | 130052 F |
| Columbia | Unincorporated Areas. | July 17, 2003, July 24, 2003; *The Augusta Chronicle*. | Mr. Steve Szablewski, Columbia County Administrator, 630 Ronald Reagan Drive, Evans, Georgia 30809. | July 10, 2003 | 130059 B |
| Fulton | Unincorporated Areas. | August 1, 2003, August 8, 2003; *Fulton County Daily Report*. | Mr. Thomas C. Andrews, Fulton County Manager, Fulton County Government Center, 141 Pryor Street, 10th Floor, Atlanta, Georgia 30303. | November 7, 2003 | 135160 E |
| Gwinnett | Unincorporated Areas. | September 4, 2003, September 11, 2003; *Gwinnett Daily Post*. | Mr. F. Wayne Hill, Chairman of the Gwinnett County Board of Commissioners, Justice and Administration Center, 75 Langley Drive, Lawrenceville, Georgia 30045. | December 11, 2003 | 130322 C |
| Whitfield | Unincorporated Areas. | August 15, 2003, August 22, 2003; *The Daily Citizen-News*. | Mr. Mike Babb, Chairman of the Whitfield County Board of Commissioners, P.O. Box 248, Dalton, Georgia 30772. | November 21, 2003 | 130193 C |
| Kentucky: | Lexington-Fayette Urban County Government. | August 6, 2003, August 13, 2003; *The Lexington Herald-Leader*. | The Honorable Teresa Isaac, Mayor of the Lexington-Fayette Urban County Government, 200 East Main Street, 12th Floor, Lexington, Kentucky 40507. | July 29, 2003 | 210067 C |
| Maryland: | | | | | |
| Montgomery | Unincorporated Areas. | July 28, 2003, August 4, 2003; *The Montgomery Journal*. | Mr. Douglas M. Duncan, Montgomery County Executive, Executive Office Building, 101 Monroe Street, Rockville, Maryland 20850. | November 3, 2003 | 240049 C |
| Massachusetts: | | | | | |
| Barnstable | Town of Bourne | September 24, 2003, October 1, 2003; *Cape Cod Times*. | Mr. Mark A. Tirrell, Chairman of the Town of Bourne Board of Selectmen, Bourne Town Hall, 24 Perry Avenue, Buzzards Bay, Massachusetts 02532. | September 17, 2003 | 255210 F |
| Barnstable | Town of Bourne | September 24, 2003, October 1, 2003; *Cape Cod Times*. | Mr. Mark A. Tirrell, Chairman of the Town of Bourne Board of Selectmen, Bourne Town Hall, 24 Perry Avenue, Buzzards Bay, Massachusetts 02532. | September 17, 2003 | 255210 E |
| Mississippi: | | | | | |
| Harrison | City of Biloxi | October 3, 2003, October 10, 2003; *The Sun Herald*. | The Honorable A.J. Holloway, Mayor of the City of Biloxi, P.O. Box 429, 140 Lameuse Street, Biloxi, Mississippi 39530. | September 26, 2003 | 285252 C |
| New Hampshire: | | | | | |
| Cheshire | City of Keene | October 3, 2003, October 20, 2003; *The Keene Sentinel*. | The Honorable Michael Blastos, Mayor of the City of Keene, City Hall, 3 Washington Street, Keene, New Hampshire 03431. | September 25, 2003 | 330023 D |
| New Jersey: | | | | | |

| State and county | Location | Dates and name of newspaper where notice was published | Chief executive officer of community | Effective date of modification | Community number |
|---|---|---|---|---|---|
| Union | Township of Scotch Plains. | September 5, 2003, September 12, 2003; *The Courier-News*. | The Honorable Martin L. Marks, Mayor of the Township of Scotch Plains, Municipal Building, 430 Park Avenue, Scotch Plains, New Jersey 07076. | December 12, 2003 | 340474 C |
| Somerset | Borough of Watchung. | September 5, 2003, September 12, 2003; *The Courier-News*. | The Honorable Albert S. Ellis, Mayor of the Borough of Watchung, 15 Mountain Boulevard, Watchung, New Jersey 07069. | Decemmber 12, 2003 | 340447 C |
| New York: | | | | | |
| Dutchess | Town of Dover | July 10, 2003, July 17, 2003; *Harlem Valley Times*. | Ms. Jill Way, Supervisor of the Town of Dover, Dover Town Hall, 126 East Duncan Hill Road, Dover Plains, New York 12522. | January 2, 2004 | 361335 A |
| North Carolina: | | | | | |
| Gaston | City of Gastonia | August 18, 2003, August 25, 2003; *The Gaston Gazette*. | The Honorable Jennifer T. Stultz, Mayor of the City of Gastonia, P.O. Box 1748, 181 South Street, Gastonia, North Carolina 28053–1748. | November 24, 2003 | 370100 E |
| Pennsylvania: | | | | | |
| Montgomery | Township of Plymouth. | August 29, 2003, September 5, 2003; *The Times Herald*. | Ms. Karen Weiss, Township of Plymouth Manager, 700 Belvoir Road, Plymouth Meeting, Pennsylvania 19462. | August 20, 2003 | 420955 E |
| Rhode Island: | | | | | |
| Bristol | Town of Bristol | September 12, 2003, September 19, 2003; *Providence Journal*. | Mr. Joseph F. Parella, Bristol Town Administrator, Town Hall, Bristol, Rhode Island 02809–2208. | September 5, 2003 | 445393 F |
| South Carolina: | | | | | |
| Charleston | City of Charleston. | September 15, 2003, September 22, 2003; *Post and Courier*. | The Honorable Joseph P. Riley, Jr., Mayor of the City of Charleston, P.O. Box 652, Charleston, South Carolina 29401. | December 22, 2003 | 455412 G |
| Charleston | Unincorporated Areas. | September 15, 2003, September 22, 2003; *Post and Courier*. | Mr. Roland H. Windham, Jr., Charleston County Administrator, 4045 Bridge View Drive, North Charleston, South Carolina 29405. | December 22, 2003 | 455413 G |
| Richland | Unincorporated Areas. | August 19, 203, August 26, 2003; *The State*. | Mr. T. Cary McSwain, Richland County Administrator, 2020 Hampton Street, P.O. Box 192, Columbia, South Carolina 29202. | November 25, 2003 | 450170 G |
| Tennessee: | | | | | |
| Nashville and Davidson. | Metropolitan Government. | August 6, 2003, August 13, 2003; *The Tennessean*. | The Honorable William Purcell, Mayor of the Metropolitan Government of Nashville and Davidson County, 107 Metropolitan Courthouse, Nashville, Tennessee 37201. | August 29, 2003 | 470040 F |
| Williamson | Unincorporated Areas. | August 6, 2003, August 13, 2003; *The Review Appeal*. | Mr. Roger S. Anderson, Williamson County Executive, 1320 West Main Street, Suite 100, Franklin, Tennessee 37064. | August 29, 2003 | 470204 E |
| Virginia: | | | | | |
| Dickenson | Unincorporated Areas. | October 1, 2003, October 8, 2003; *The Dickenson Star*. | Mr. Keith L. Viers, Dickenson County Administrator, Administrative Office, P.O. Box 1098, Clintwood, Virginia 24228. | January 7, 2004 | 510253 C |
| Prince William. | Unincorporated Areas. | August 11, 2003, August 18, 2003; *Potomac News*. | Mr. Craig Gerhart, Prince William County Executive, 1 County Complex Court, Prince William, Virginia 22192. | November 17, 2003 | 510119 D |

| State and county | Location | Dates and name of newspaper where notice was published | Chief executive officer of community | Effective date of modification | Community number |
|---|---|---|---|---|---|
| Russell ..... | Unincorporated Areas. | October 1, 2003, October 8, 2003; *Lebanon News*. | Mr. Frank Horton, Chairman of the Russell County Board of Supervisors, P.O. Box 1208, Lebanon, Virginia 24266. | January 7, 2004 ..... | 510317 B |

(Catalog of Federal Domestic Assistance No. 83.100, ''Flood Insurance.'')

Dated: November 18, 2003.

**Anthony S. Lowe,**

*Mitigation Division Director, Emergency Preparedness and Response Directorate.*

[FR Doc. 03–29794 Filed 11–28–03; 8:45 am]

**BILLING CODE 9110–12–P**

## DEPARTMENT OF HOMELAND SECURITY

## Federal Emergency Management Agency

## 44 CFR Part 67

## Final Flood Elevation Determinations

**AGENCY:** Federal Emergency Management Agency (FEMA), Emergency Preparedness and Response Directorate, Department of Homeland Security.

**ACTION:** Final rule.

**SUMMARY:** Base (1% annual chance) Flood Elevations (BFEs) and modified BFEs are made final for the communities listed below. The BFEs and modified BFEs are the basis for the floodplain management measures that each community is required either to adopt or to show evidence of being already in effect in order to qualify or remain qualified for participation in the National Flood Insurance Program (NFIP).

**EFFECTIVE DATES:** The date of issuance of the Flood Insurance Rate Map (FIRM) showing BFEs and modified BFEs for each community. This date may be obtained by contacting the office where the maps are available for inspection as indicated on the table below.

**ADDRESSES:** The final BFEs for each community are available for inspection at the office of the Chief Executive Officer of each community. The respective addresses are listed in the table below.

**FOR FURTHER INFORMATION CONTACT:** Doug Bellomo, P.E., Hazard Identification Section, Emergency Preparedness and Response Directorate, FEMA, 500 C Street SW., Washington, DC 20472, (202) 646–2903.

**SUPPLEMENTARY INFORMATION:** FEMA makes the final determinations listed below for the modified BFEs for each community listed. These modified elevations have been published in newspapers of local circulation and ninety (90) days have elapsed since that publication. The Mitigation Division Director of the Emergency Preparedness and Response Directorate, has resolved any appeals resulting from this notification.

This final rule is issued in accordance with Section 110 of the Flood Disaster Protection Act of 1973, 42 U.S.C. 4104, and 44 CFR Part 67.

The Agency has developed criteria for floodplain management in floodprone areas in accordance with 44 CFR Part 60.

Interested lessees and owners of real property are encouraged to review the proof Flood Insurance Study and FIRM available at the address cited below for each community.

The BFEs and modified BFEs are made final in the communities listed below. Elevations at selected locations in each community are shown.

*National Environmental Policy Act.* This rule is categorically excluded from the requirements of 44 CFR Part 10, Environmental Consideration. No environmental impact assessment has been prepared.

*Regulatory Flexibility Act.* The Mitigation Division Director of the Emergency Preparedness and Response Directorate certifies that this rule is exempt from the requirements of the Regulatory Flexibility Act because final or modified BFEs are required by the Flood Disaster Protection Act of 1973, 42 U.S.C. 4104, and are required to establish and maintain community eligibility in the NFIP. No regulatory flexibility analysis has been prepared.

*Regulatory Classification.* This final rule is not a significant regulatory action under the criteria of Section 3(f) of Executive Order 12866 of September 30, 1993, Regulatory Planning and Review, 58 FR 51735.

*Executive Order 12612, Federalism.* This rule involves no policies that have federalism implications under Executive Order 12612, Federalism, dated October 26, 1987.

*Executive Order 12778, Civil Justice Reform.* This rule meets the applicable standards of Section 2(b)(2) of Executive Order 12778.

### List of Subjects in 44 CFR Part 67

Administrative practice and procedure, flood insurance, reporting and recordkeeping requirements.

■ Accordingly, 44 CFR Part 67 is amended as follows:

## PART 67—[AMENDED]

■ 1. The authority citation for Part 67 continues to read as follows:

**Authority:** 42 U.S.C. 4001 *et seq.*; Reorganization Plan No. 3 of 1978, 3 CFR, 1978 Comp., p. 329; E.O. 12127, 44 FR 19367, 3 CFR, 1979 Comp., p. 376.

### § 67.11 [Amended]

■ 2. The tables published under the authority of § 67.11 are amended as follows:

| Source of flooding and location | #Depth in feet above ground. *Elevation in feet (NGVD) •Elevation in feet (NAVD) |
|---|---|
| **NORTH CAROLINA** | |
| **Franklin County (FEMA Docket No. D–7562)** | |
| *Basin 10, Stream 14:* | |
| Approximately 150 feet downstream of the County boundary ..... | •306 |
| Approximately 1.3 miles upstream of the County boundary ..... | •379 |
| **Franklin County (Unincorporated Areas)** | |
| *Bear Swamp Creek:* | |
| Approximately 1,500 feet downstream of Dyking Road ..... | •212 |
| Approximately 2.1 miles upstream of Dyking Road ..... | •229 |
| **Franklin County (Unincorporated Areas)** | |
| *Beaverdam Creek (Basin 11, Stream 3):* | |
| At the confluence with Moccasin Creek ..... | •226 |
| Approximately 200 feet upstream of the confluence with Moccasin Creek ..... | •226 |

| Source of flooding and location | #Depth in feet above ground. * Elevation in feet (NGVD) •Elevation in feet (NAVD) |
|---|---|
| **Franklin County (Unincorporated Areas)** | |
| *Big Branch Creek:* | |
| At the confluence with Cedar Creek | •193 |
| Approximately 1 mile upstream of Sam Horton Road | •243 |
| **Franklin County (Unincorporated Areas)** | |
| *Big Peachtree Creek:* | |
| At the County boundary | •204 |
| Approximately 1.2 miles upstream of Gardner Road | •234 |
| **Franklin County (Unincorporated Areas)** | |
| *Big Peachtree Creek Tributary:* | |
| At the confluence with Big Peachtree Creek | •208 |
| Approximately 0.9 mile upstream of the confluence with Big Peachtree Creek | •231 |
| **Franklin County (Unincorporated Areas)** | |
| *Billys Creek:* | |
| Approximately 1,180 feet upstream of the confluence with the Tar River | •226 |
| Approximately 1.9 miles upstream of the confluence with the Tar River | •243 |
| **Franklin County (Unincorporated Areas)** | |
| *Brandy Creek:* | |
| At the confluence with Cedar Creek | •275 |
| Approximately 425 feet upstream of Park Avenue | •381 |
| **Franklin County (Unincorporated Areas), Town of Youngsville** | |
| *Brandy Creek Tributary:* | |
| At the confluence with Brandy Creek | •310 |
| Approximately 0.7 mile upstream of the confluence with Brandy Creek | •333 |
| **Franklin County (Unincorporated Areas)** | |
| *Buffalo Creek South:* | |
| Approximately 0.5 mile upstream of the confluence with the Tar River | •213 |
| Approximately 2.7 miles upstream of West River Road | •247 |
| **Franklin County (Unincorporated Areas)** | |
| *Buffalo Creek:* | |
| At the confluence with Sandy Creek | •271 |
| Approximately 2.5 miles upstream of U.S. 401 | •355 |
| **Franklin County (Unincorporated Areas)** | |
| *Buffalo Creek Tributary 1:* | |
| At the confluence with Buffalo Creek | •283 |
| Approximately 700 feet upstream of Tollie Weldon Road | •327 |
| **Franklin County (Unincorporated Areas)** | |
| *Camping Creek:* | |
| At the confluence with Cedar Creek | •231 |
| Approximately 0.7 mile upstream of Hart Road | •300 |
| **Franklin County (Unincorporated Areas)** | |
| *Camping Creek Tributary 1:* | |
| At the confluence with Camping Creek | •264 |
| Approximately 0.7 mile upstream of the confluence with Camping Creek | •286 |
| *Cedar Creek:* | |
| Approximately 0.8 mile upstream of the confluence with the Tar River | •193 |
| Approximately 1.1 miles upstream of Pocomoke Road | •427 |
| *Cedar Creek Tributary 1:* | |
| At the confluence with Cedar Creek | •212 |
| Approximately 1.5 miles upstream of Bennette Perry Road | •252 |
| **Franklin County (Unincorporated Areas)** | |
| *Cedar Creek Tributary 2:* | |
| At the confluence with Cedar Creek | •269 |
| Approximately 0.8 mile upstream of Hill Road | •338 |
| **Franklin County (Unincorporated Areas)** | |
| *Cedar Creek Tributary 3:* | |
| At the confluence with Cedar Creek | •305 |
| Approximately 0.4 mile downstream of Long Mill Road | •380 |
| **Franklin County (Unincorporated Areas)** | |
| *Crooked Creek:* | |
| Approximately 80 feet downstream of NC 98 | •174 |
| Approximately 0.9 mile upstream of Moores Pond Road | •375 |
| **Franklin County (Unincorporated Areas), Town of Bunn** | |
| *Crooked Creek Tributary 1:* | |
| At the confluence with Crooked Creek | •193 |
| Approximately 1.4 miles upstream of Pearces Road | •241 |
| **Franklin County (Unincorporated Areas), Town of Bunn** | |
| *Crooked Creek Tributary 2:* | |
| At the confluence with Crooked Creek | •234 |
| Approximately 1.2 miles upstream of the confluence with Crooked Creek | •270 |
| **Franklin County (Unincorporated Areas)** | |
| *Crooked Creek Tributary 3:* | |
| At the confluence with Crooked Creek | •266 |
| Approximately 0.6 mile upstream of U.S. 401 | •330 |
| **Franklin County (Unincorporated Areas)** | |
| *Crooked Creek Tributary 4:* | |
| At the confluence with Crooked Creek Tributary 3 | •270 |
| Approximately 0.9 mile upstream of the confluence with Crooked Creek Tributary 3 | •325 |
| **Franklin County (Unincorporated Areas)** | |
| *Cypress Creek:* | |
| At the confluence with the Tar River | •171 |
| Approximately 1.6 miles upstream of NC 56 | •260 |
| Approximately 1.2 miles upstream of the confluence with the Tar River | •170 |
| **Franklin County (Unincorporated Areas), Town of Youngsville** | |
| *Deer Branch:* | |
| At the confluence with Sandy Creek | •185 |
| Approximately 1,200 feet upstream of NC 58 | •249 |
| **Franklin County (Unincorporated Areas)** | |
| *Devils Cradle Creek:* | |
| At the confluence with Sandy Creek | •251 |
| Approximately 1.9 miles upstream of NC 39 | •379 |
| **Franklin County (Unincorporated Areas)** | |
| *Fishing Creek:* | |
| Approximately 1,450 feet upstream of NC 561 | •165 |
| Approximately 1.1 miles upstream of NC 561 | •166 |
| **Franklin County (Unincorporated Areas)** | |
| *Flatrock Creek:* | |
| At the confluence with Devils Cradle Creek | •264 |
| Approximately 2.6 miles upstream of Lake View Road | •398 |
| **Franklin County (Unincorporated Areas)** | |
| *Fox Creek:* | |
| Approximately 0.5 mile upstream of NC 56/NC 581 | •204 |
| Approximately 0.9 mile upstream of NC 561 | •225 |
| **Franklin County (Unincorporated Areas), Town of Louisburg** | |
| *Giles Creek:* | |
| At the confluence with Tooles Creek | •238 |
| Approximately 0.9 mile upstream of the confluence with Tooles Creek | •254 |
| **Franklin County (Unincorporated Areas)** | |
| *Hattles Branch:* | |
| At the confluence with Richland Creek | •314 |

| Source of flooding and location | #Depth in feet above ground. * Elevation in feet (NGVD) •Elevation in feet (NAVD) |
|---|---|
| Approximately 100 feet downstream of South College Street | •396 |
| **Franklin County (Unincorporated Areas)** | |
| *Horse Creek:* | |
| At the downstream County boundary | •342 |
| Approximately 225 feet upstream of Nottingham Court | •387 |
| **Franklin County (Unincorporated Areas)** | |
| *Jumping Run:* | |
| Approximately 0.6 mile downstream of East River Road | •195 |
| Approximately 975 feet upstream of East River Road | •204 |
| **Franklin County (Unincorporated Areas)** | |
| *Little River:* | |
| At the downstream County boundary | •325 |
| Approximately 900 feet upstream of Martindale Drive | •430 |
| **Franklin County (Unincorporated Areas), Town of Youngsville** | |
| *Little Shocco Creek:* | |
| At the confluence with Shocco Creek | •206 |
| Approximately 2.3 miles upstream of Rod Alston Road | •258 |
| **Franklin County (Unincorporated Areas)** | |
| *Long Branch:* | |
| At the confluence with Cypress Creek | •236 |
| Approximately 1.4 miles upstream of the confluence with Cypress Creek | •265 |
| **Franklin County (Unincorporated Areas)** | |
| *Lynch Creek:* | |
| Approximately 0.5 mile downstream of Dyking Road | •213 |
| At the County boundary | •332 |
| **Franklin County (Unincorporated Areas)** | |
| *Middle Creek:* | |
| Approximately 1,200 feet upstream of Green Hill Road | •242 |
| Approximately 1.8 miles upstream of Green Hill Road | •257 |
| **Franklin County (Unincorporated Areas)** | |
| *Moccasin Creek:* | |
| At Interstate 264 | •219 |
| Approximately 0.7 mile upstream of Henry Baker Road | •307 |
| **Franklin County (Unincorporated Areas)** | |
| *Moccasin Creek Tributary 3:* | |
| At the confluence with Moccasin Creek | •269 |
| Approximately 0.4 mile upstream of Old Halifax Road | •368 |
| **Franklin County (Unincorporated Areas)** | |
| Norris Creek: | |
| At the confluence with Crooked Creek | •181 |
| Approximately 450 feet upstream of Bethlehem Church | •331 |
| **Franklin County (Unincorporated Areas)** | |
| *Norris Creek Tributary 1:* | |
| At the confluence with Norris Creek | •197 |
| Approximately 0.9 mile upstream of Johnson Town Road | •237 |
| **Franklin County (Unincorporated Areas)** | |
| *Press Prong Tributary 1:* | |
| At the County boundary | •241 |
| Approximately 0.9 mile upstream of Tant Road | •273 |
| **Franklin County (Unincorporated Areas)** | |
| *Red Bud Creek:* | |
| Approximately 1.4 miles downstream of NC 58 | •194 |
| Approximately 4.2 miles upstream of NC 58 | •254 |
| **Franklin County (Unincorporated Areas)** | |
| *Richland Creek:* | |
| At the County boundary | •301 |
| Approximately 1.0 mile upstream of the confluence of Hattles Branch | •358 |
| **Franklin County (Unincorporated Areas), Town of Youngsville** | |
| *Sandy Creek:* | |
| At the downstream County boundary | •184 |
| Approximately 1 mile upstream of Hightower Road | •281 |
| **Franklin County (Unincorporated Areas)** | |
| *Sandy Creek Tributary 1:* | |
| At the confluence with Sandy Creek | •187 |
| Approximately 1.3 miles upstream of Reed Road | •209 |
| **Franklin County (Unincorporated Areas)** | |
| *Sandy Creek Tributary 2:* | |
| At the confluence with Sandy Creek | •193 |
| Approximately 0.8 mile upstream of the confluence with Sandy Creek | •209 |
| **Franklin County (Unincorporated Areas)** | |
| *Sandy Creek Tributary 3:* | |
| At the confluence with Sandy Creek | •205 |
| Approximately 630 feet upstream of Douglas Williams Road | •263 |
| **Franklin County (Unincorporated Areas)** | |
| *Sandy Creek Tributary 4:* | |
| At the confluence with Sandy Creek Tributary 3 | •207 |
| Approximately 230 feet upstream of JB Leonard Road | •231 |
| **Franklin County (Unincorporated Areas)** | |
| *Sandy Creek Tributary 5:* | |
| At the confluence with Sandy Creek | •206 |
| Approximately 1.3 miles upstream of NC 561 | •314 |
| **Franklin County (Unincorporated Areas)** | |
| *Sandy Creek Tributary 6:* | |
| At the confluence with Sandy Creek | •212 |
| Approximately 500 feet upstream of Raymond Tharrington Road | •257 |
| **Franklin County (Unincorporated Areas)** | |
| *Sandy Creek Tributary 7:* | |
| At the confluence with Sandy Creek | •236 |
| Approximately 1.4 miles upstream of Person Road | •500 |
| **Franklin County (Unincorporated Areas)** | |
| *Sandy Creek Tributary 8:* | |
| At the confluence with Sandy Creek Tributary 7 | 248 |
| Approximately 1.1 miles upstream of the confluence with Sandy Creek Tributary 7 | •284 |
| **Franklin County (Unincorporated Areas)** | |
| *Sandy Creek Tributary 9:* | |
| At the confluence with Sandy Creek | •250 |
| Approximately 0.4 mile upstream of the confluence with Sandy Creek | •251 |
| **Franklin County (Unincorporated Areas)** | |
| *Sandy Creek Tributary 10:* | |
| At the confluence with Sandy Creek | •265 |
| Approximately 0.8 mile upstream of the confluence with Sandy Creek | •279 |
| **Franklin County (Unincorporated Areas)** | |
| *Sandy Creek Tributary 13:* | |
| At the confluence with Sandy Creek | •215 |
| Approximately 0.6 mile upstream of the confluence of Sandy Creek Tributary 15 | •270 |
| **Franklin County (Unincorporated Areas)** | |
| *Sandy Creek Tributary 14:* | |
| At the confluence with Sandy Creek Tributary 13 | •231 |
| Approximately 1.2 miles upstream of the confluence with Sandy Creek Tributary 13 | •277 |

| Source of flooding and location | #Depth in feet above ground. *Elevation in feet (NGVD) •Elevation in feet (NAVD) |
|---|---|
| **Franklin County (Unincorporated Areas)** | |
| *Sandy Creek Tributary 15:* | |
| At the confluence with Sandy Creek Tributary 13 | •262 |
| Approximately 0.4 mile upstream of the confluence with Sandy Creek Tributary 13 | •270 |
| **Franklin County (Unincorporated Areas)** | |
| *Shocco Creek:* | |
| At the confluence of Fishing Creek | •166 |
| Approximately 4.1 miles upstream of NC 58 | •206 |
| **Franklin County (Unincorporated Areas)** | |
| *Sycamore Creek:* | |
| Approximately 1,000 feet downstream of East River Road | •200 |
| Approximately 1,400 feet downstream of Ronald Tharrington Road | •236 |
| **Franklin County (Unincorporated Areas)** | |
| *Tar River:* | |
| Approximately 390 feet downstream of the confluence of Cypress Creek | •170 |
| Approximately 600 feet upstream of the confluence of Cypress Creek | •170 |
| **Franklin County (Unincorporated Areas)** | |
| *Tar River Tributary 1:* | |
| Approximately 500 feet upstream of the confluence with the Tar River | •197 |
| Approximately 0.9 mile upstream of George Leonard Road | •209 |
| **Franklin County (Unincorporated Areas)** | |
| *Taylors Creek:* | |
| Approximately 750 feet upstream of the confluence with the Tar River | •234 |
| Approximately 1.6 miles upstream of the confluence with the Tar River | •240 |
| **Franklin County (Unincorporated Areas)** | |
| *Tooles Creek:* | |
| At the confluence with Lynch Creek | •213 |
| Approximately 100 feet downstream of Joe Ward Road | •310 |
| **Franklin County (Unincorporated Areas)** | |
| *Turkey Creek:* | |
| Approximately 800 feet upstream of the confluence of Turkey Creek Tributary 1 | •253 |
| Approximately 1.4 miles upstream of Interstate 64 | •320 |
| **Franklin County (Unincorporated Areas)** | |
| *Turkey Creek Tributary 1:* | |
| Approximately 450 feet upstream of the confluence with Turkey Creek | •253 |
| Approximately 0.5 mile upstream of Interstate 64 | •319 |
| **Franklin County (Unincorporated Areas)** | |
| *Wolfharbor Branch:* | |
| At the confluence with Turkey Creek | •261 |
| Approximately 1.5 miles upstream of Carlyle Road | •335 |
| **Franklin County (Unincorporated Areas)** | |
| *Wolfpen Branch:* | |
| Approximately 0.6 mile upstream of the confluence with the Tar River | •197 |
| Approximately 450 feet downstream of NC 39 | •212 |
| **Franklin County (Unincorporated Areas), Town of Louisburg** | |
| **Franklin County (Unincorporated Areas)** | |
| **Maps available for inspection** at the Franklin County GIS Department, 215 East Nash Street, Louisburg, North Carolina. | |
| **Town of Bunn** | |
| **Maps available for inpsection** at the Bunn Town Hall, 601 Main Street, Bunn, North Carolina. | |
| **Town of Franklinton** | |
| **Maps available for inspection** at the Franklinton Town Hall, 7 West Mason Street, Franklinton, North Carolina. | |
| **Town of Louisburg** | |
| **Maps available for inpsection** at the Louisburg Town Hall, 110 West Nash Street, Louisburg North Carolina. | |
| **Town of Youngsville** | |
| **Maps available for inpsection** at the Youngsville Town Hall, 118 North Carolina. | |
| **Greene County (FEMA Docket No. D–7562)** | |
| *Contentnea Creek:* | |
| At the Greene/Pitt County boundary | •31 |
| Approximately 1.2 miles upstream of Hugo Road | •33 |
| **Towns of Hookerton and Snow Hill, Greene County (Unincorporated Areas)** | |
| *Appletree Swamp:* | |
| At 1 Arm Edwards Road | •75 |
| At the Greene/Wayne County boundary | •86 |
| **Greene County (Unincorporated Areas)** | |
| *Appletree Swamp Tributary:* | |
| At the confluence with Appletree Swamp | •83 |
| Approximately 0.5 mile upstream of the confluence with Appletree Swamp | •88 |
| **Greene County (Unincorporated Areas)** | |
| *Button Branch:* | |
| At the Greene/Wayne County boundary | •69 |
| Approximately 1,500 feet upstream of Wayne Road | •84 |
| **Greene County (Unincorporated Areas)** | |
| *Fort Run:* | |
| Approximately 0.8 mile upstream of the confluence with Contentnea Creek | •51 |
| Approximately 0.8 mile upstream of Gurganus Road | •87 |
| **Greene County (Unincorporated Areas)** | |
| *Lewis Branch:* | |
| At the confluence with Fort Run | •64 |
| Approximately 0.8 mile upstream of the confluence with Fort Run | •75 |
| **Greene County (Unincorporated Areas)** | |
| *Middle Swamp:* | |
| At the upstream side of U.S. Route 258 | •63 |
| Approximately 2.0 miles upstream of U.S. Route 258 | •68 |
| **Greene County (Unincorporated Areas)** | |
| *Rainbow Creek:* | |
| Approximately 0.6 mile upstream of the confluence with Contentnea Creek | •38 |
| Approximately 0.6 mile upstream of U.S. Route 258 | •76 |
| **Greene County (Unincorporated Areas)** | |
| *Reeders Fork:* | |
| At the confluence with Tyson Marsh | •56 |
| Approximately 0.3 mile upstream of Burrfield Road | •86 |
| **Greene County (Unincorporated Areas)** | |
| *Reedy Branch:* | |
| At the confluence with Tyson Marsh | •60 |
| Approximately 1.4 miles upstream of the confluence with Tyson Marsh | •77 |
| **Greene County (Unincorporated Areas)** | |
| *Sandy Run:* | |
| Approximately 0.5 mile upstream of Sterfarm Road | •44 |
| Approximately 800 feet downstream of State Route 1324 | •74 |

| Source of flooding and location | #Depth in feet above ground. * Elevation in feet (NGVD) •Elevation in feet (NAVD) |
|---|---|
| **Greene County (Unincorporated Areas)** | |
| *Tyson Marsh:* | |
| Approximately 1,600 feet upstream of Highway 58 | •49 |
| Approximately 0.5 mile upstream of Gray Turnage Road | •78 |
| **Town of Snow Hill, Greene County (Unincorporated Areas)** | |
| *Watery Branch:* | |
| Approximately 0.5 mile upstream of the confluence with Contentnea Creek | •62 |
| At the Greene/Wayne County boundary | •74 |
| **Greene County (Unincorporated Areas)** | |
| *Wheat Swamp:* | |
| Approximately 0.5 mile upstream of the confluence with Contentnea Creek | •36 |
| Approximately 1.2 miles upstream of Sugg Road | •77 |
| **Greene County (Unincorporated Areas)** | |
| *Wheat Swamp Tributary:* | |
| At the confluence with Wheat Swamp | •40 |
| At the Greene/Lenoir County boundary | •40 |
| **Greene County (Unincorporated Areas)** | |
| **Town of Hookerton** | |
| **Maps available for inspection** at the Hookerton Town Hall, 227 East Main Street, Hookerton, North Carolina. | |
| **Town of Snow Hill** | |
| **Maps available for inspection** at the Snow Hill Town Hall, 201 North Greene Street, Snow Hill, North Carolina. | |
| **Unincorporated Areas of Greene County** | |
| **Maps available for inspection** at the Greene County Inspections Office, 229 Kingold Boulevard, Snow Hill, North Carolina. | |
| **Mecklenburg County** | |
| *Back Creek:* | |
| Approximately 125 feet downstream of the confluence of Back Creek Tributary | •614 |
| Approximately 0.7 mile upstream of W. T. Harris Boulevard | •714 |
| **City of Charlotte, Mecklenburg County (Unincorporated Areas)** | |
| *Back Creek Tributary:* | |
| At the confluence with Back Creek | •617 |
| Approximately 250 feet upstream of Back Creek Church Road | •695 |
| **Mecklenburg County (Unincorporated Areas)** | |
| *Beaverdam Creek:* | |
| At the confluence with Lake Wylie | •571 |
| Approximately 2 miles upstream of Dixie River Road | •639 |
| **Mecklenburg County (Unincorporated Areas)** | |
| *Beaverdam Creek Tributary:* | |
| At the confluence with Beaverdam Creek | •576 |
| Approximately 1.2 miles upstream of the confluence with Beaverdam Creek | •603 |
| **Mecklenburg County (Unincorporated Areas)** | |
| *Blankmanship Branch:* | |
| At the South Carolina State boundary | •616 |
| Approximately 50 feet upstream of Steele Creek Road | •636 |
| **Mecklenburg County (Unincorporated Areas)** | |
| *Briar Creek:* | |
| At the confluence with Little Sugar Creek | •593 |
| Approximately 500 feet upstream of Plaza Road | •708 |
| *City of Charlotte* | |
| *Briar Creek Tributary 1:* | |
| At the confluence with Briar Creek | •594 |
| Approximately 400 feet upstream of Colony Road | •618 |
| *City of Charlotte* | |
| *Briar Creek Tributary 2:* | |
| At the confluence with Briar Creek | •692 |
| Approximately 530 feet upstream of Galway Drive | •707 |
| *City of Charlotte* | |
| *Caldwell Creek:* | |
| At the Cabarrus County Line | •623 |
| Approximately 0.9 mile upstream of Cabarrus County Line | •664 |
| **Mecklenburg County (Unincorporated Areas)** | |
| *Caldwell Station:* | |
| At the confluence with McDowell Creek | •699 |
| Approximately 0.4 mile upstream of Statesville Road | •719 |
| **Town of Huntersville, Mecklenburg County (Unincorporated Areas)** | |
| *Campbell Creek:* | |
| At the confluence with McAlpine Creek | •592 |
| Approximately 0.4 mile upstream of Statesville Road | •715 |
| *City of Charlotte* | |
| *Cane Creek:* | |
| At the confluence with South Prong Clarke Creek | •651 |
| Approximately 2.2 miles upstream of the confluence with South Prong Clark Creek | •700 |
| **Town of Huntersville, Mecklenburg County (Unincorporated Areas)** | |
| *Catawba River:* | |
| Approximately 1.8 miles upstream of York County/South Carolina boundary | •570 |
| At Cowans Ford Dam | •670 |
| **Mecklenburg County (Unincorporated Areas)** | |
| *Catawba River Tributary 1:* | |
| At the confluence with Catawba River | •574 |
| Approximately 1.1 miles upstream of the confluence with the Catawba River | •600 |
| **Mecklenburg County (Unincorporated Areas)** | |
| *Catawba River Tributary 2:* | |
| Approximately 0.6 mile upstream of the confluence of Catawba River | •578 |
| Approximately 0.7 mile upstream of Hardwood Lane | •634 |
| **Mecklenburg County (Unincorporated Areas)** | |
| Catawba River Tributary 3: | |
| At the confluence with Catawba River | •664 |
| Approximately 75 feet upstream of Cashion Road | •691 |
| **Mecklenburg County (Unincorporated Areas)** | |
| *Clarke Creek:* | |
| Approximately 1,680 feet downstream of the confluence of Ramah Creek | •630 |
| At the confluence of South Prong Clarke Creek/North Prong Clarke Creek | •637 |
| **Mecklenburg County (Unincorporated Areas)** | |
| *Clarke Creek Tributary:* | |
| Approximately 0.4 mile downstream of Highland Creek Parkway | •630 |
| Approximately 1.1 miles upstream of Highland Creek Parkway | •708 |
| **City of Charlotte, Mecklenburg County (Unincorporated Areas)** | |
| *Clarks Creek:* | |
| At the confluence of Mallard Creek | •631 |
| Approximately 530 feet upstream of Dearmon Road | •739 |
| **City of Charlotte, Mecklenburg County (Unincorporated Areas)** | |
| *Clarks Creek Tributary 1:* | |
| At the confluence with Clarks Creek | •710 |

| Source of flooding and location | #Depth in feet above ground. * Elevation in feet (NGVD) •Elevation in feet (NAVD) |
|---|---|
| Approximately 0.5 mile upstream of Hucks Road | •741 |
| **City of Charlotte, Mecklenburg County (Unincorporated Areas)** | |
| *Clarks Creek Tributary 1A:* | |
| At the confluence with Clarks Creek Tributary 1 | •727 |
| Approximately 1,900 feet upstream of Davis Lake Parkway | •780 |
| **City of Charlotte, Mecklenburg County (Unincorporated Areas)** | |
| *Clear Creek:* | |
| At County boundary | •535 |
| Approximately 1.0 mile upstream of the confluence of Clear Creek Tributary | •661 |
| **Town of Mint Hill, Mecklenburg County (Unincorporated Areas)** | |
| *Clear Creek Tributary:* | |
| Approximately 400 feet upstream of the confluence with Clear Creek | •624 |
| Approximately 1,650 feet upstream of Truelight Church Road | •683 |
| **Town of Mint Hill, Mecklenburg County (Unincorporated Areas)** | |
| *Clems Branch:* | |
| At the Lancaster County boundary | •567 |
| Approximately 150 feet upstream of Lancaster Highway | •588 |
| **Mecklenburg County (Unincorporated Areas)** | |
| *Coffey Creek:* | |
| At the confluence with Sugar Creek | •575 |
| Approximately 0.7 mile upstream of West Boulevard | •663 |
| **City of Charlotte, Mecklenburg County (Unincorporated Areas)** | |
| *Dairy Branch:* | |
| Approximately 250 feet upstream of confluence with Little Sugar Creek | •622 |
| Approximately 170 feet upstream of Scott Avenue | •657 |
| **City of Charlotte** | |
| *Derita Branch:* | |
| At confluence with Little Sugar Creek | •690 |
| Approximately 0.6 mile upstream of West Craighead Road | •729 |
| **City of Charlotte** | |
| *Dixon Branch:* | |
| At the confluence with Long Creek | •711 |
| Approximately 1,450 feet upstream of the confluence of Dixon Branch Tributary | •731 |
| **Mecklenburg County (Unincorporated Areas)** | |
| *Dixon Branch Tributary:* | |
| At the confluence with Dixon Branch | •725 |
| Approximately 0.27 mile upstream of Statesville Road | •749 |
| **Mecklenburg County (Unincorporated Areas)** | |
| *Doby Creek:* | |
| At the confluence with Mallard Creek | •610 |
| Approximately 1.4 miles upstream of Governors Village Middle School | •708 |
| **City of Charlotte** | |
| *Doby Creek Tributary:* | |
| At the confluence with Doby Creek | •612 |
| Approximately 640 feet upstream of IBM Drive | •655 |
| **City of Charlotte, Mecklenburg County (Unincorporated Areas)** | |
| *Duck Creek:* | |
| At the County boundary | •575 |
| Approximately 1.0 mile upstream of County boundary | •607 |
| **Mecklenburg County (Unincorporated Areas)** | |
| *Edwards Branch:* | |
| At the confluence with Briar Creek | •656 |
| Approximately 400 feet upstream of Sheffield Drive | •700 |
| **City of Charlotte** | |
| *Ferrelltown Creek:* | |
| At the confluence with Clarke Creek | •633 |
| Approximately 1.4 miles upstream of the confluence with Clarke Creek: | •666 |
| **Mecklenburg County (Unincorporated Areas)** | |
| *Flat Branch:* | |
| At the confluence with Sixmile Creek | •589 |
| Approximately 0.8 mile upstream of Tom Short Road | •640 |
| **City of Charlotte, Mecklenburg County (Unincorporated Areas)** | |
| *Fourmile Creek:* | |
| At the confluence with McAlpine Creek | •541 |
| At downstream side of E. John Street | •666 |
| **City of Charlotte, Town of Matthews, Mecklenburg County (Unincorporated Areas)** | |
| *Gar Creek:* | |
| Approximately 1,250 feet downstream of Beatties Ford Road | •664 |
| Approximately 1,300 feet upstream of Kerns Road | •709 |
| **Mecklenburg County (Unincorporated Areas)** | |
| *Goose Creek:* | |
| At the County boundary | •627 |
| Approximately 1.2 miles upstream of Lawyers Road | •682 |
| **Town of Mint Hill, Mecklenburg County (Unincorporated Areas)** | |
| *Gum Branch:* | |
| At the confluence with Long Creek | •641 |
| Approximately 350 feet upstream of Old Plank Road | •712 |
| **City of Charlotte, Mecklenburg County (Unincorporated Areas)** | |
| *Gutter Branch:* | |
| At the confluence with Long Creek | •649 |
| Approximately 0.9 mile upstream of Oakdale Road | •721 |
| **Mecklenburg County (Unincorporated Areas)** | |
| *Irvins Creek:* | |
| At the confluence with McAlpine Creek | •584 |
| Approximately 350 feet upstream of Lawyers Road | •709 |
| **City of Charlotte, Town of Mint Hill, Town of Matthews, Mecklenburg County (Unincorporated Areas)** | |
| *Irvins Creek Tributary 1:* | |
| At the confluence with Irvins Creek | •587 |
| Approximately 800 feet upstream of Windsor Park bridge | •671 |
| **City of Charlotte, Town of Matthews** | |
| *Irvins Creek Tibutary 2:* | |
| At the confluence with Irvins Creek | •670 |
| Approximately 0.6 mile upstream of Lawyers Road | •700 |
| **Town of Mint Hill** | |
| *Irwin Creek:* | |
| At the confluence with Sugar Creek | •607 |
| Approximately 0.9 mile upstream of Nevin Road | •739 |
| **City of Charlotte** | |
| *Irwin Creek Tibutary 1:* | |
| At the confluence with Irwin Creek | •615 |
| Approximately 0.6 mile upstream of Fieldcrest Road | •647 |
| **City of Charlotte** | |
| *Kennedy Branch:* | |
| At the confluence with Irwin Creek | •665 |
| Approximately 180 feet upstream of Slater Road | •731 |
| **City of Charlotte** | |
| *Kings Branch:* | |
| At the confluence with Sugar Creek | •552 |
| Approximately 150 feet upstream of Interstate 77 | •631 |

| Source of flooding and location | #Depth in feet above ground. * Elevation in feet (NGVD) •Elevation in feet (NAVD) |
|---|---|
| **City of Charlotte** | |
| *Little Hope Creek:* | |
| Approximately 400 feet upstream of the confluence with Little Sugar Creek | •593 |
| Approximately 200 feet upstream of Woodlawn Road | •627 |
| **City of Charlotte** | |
| *Little Hope Creek Tributary:* | |
| At the confluence with Little Hope Creek | •615 |
| Approximately 260 feet upstream of Bradbury Drive | •623 |
| **City of Charlotte** | |
| *Little Paw Creek:* | |
| Approximately 1,300 feet upstream of the confluence with Lake Wylie | •573 |
| Approximately 0.8 mile upstream of Mt. Olive Church Road | •655 |
| **Mecklenburg County (Unincorporated Areas)** | |
| *Little Sugar Creek:* | |
| At the North Carolina/South Carolina State Border | •538 |
| Approximately 750 feet upstream of Kentbrook Drive | •720 |
| **City of Charlotte, Mecklenburg County (Unincorporated Areas)** | |
| *Long Creek:* | |
| At the confluence with Catawba River | •578 |
| Approximately 0.46 mile upstream of Statesville Road | •754 |
| **City of Charlotte, Mecklenburg County (Unincorporated Areas)** | |
| *Long Creek Tibutary 1:* | |
| At the confluence with Long Creek | •589 |
| Approximately 0.6 mile upstream of confluence with Long Creek | •589 |
| **Mecklenburg County (Unincorporated Areas)** | |
| *Long Creek Tributary 2:* | |
| At the confluence with Long Creek | •628 |
| Approximately 1,950 feet upstream of the confluence with Long Creek | •652 |
| **City of Charlotte** | |
| *Long Creek Tributary 3:* | |
| At the confluence with Long Creek | •639 |
| Approximately 0.5 mile upstream of Gum Branch Road | •639 |
| **City of Charlotte** | |
| *Mallard Creek:* | |
| Approximately 2.6 miles downstream of Pavilion Drive | •578 |
| Approximately 450 feet upstream of Old Potters Road | •733 |
| **City of Charlotte, Mecklenburg County (Unincorporated Areas)** | |
| *Mallard Creek Tributary:* | |
| At the confluence with Mallard Creek | •673 |
| Approximately 1,500 feet upstream of Hubbard Road | •683 |
| **City of Charlotte** | |
| *McAlpine Creek:* | |
| At the State boundary | •527 |
| Approximately 0.5 mile upstream of Marlwood Circle | •690 |
| **City of Charlotte, Mecklenburg County (Unincorporated Areas)/Town of Mint Hill** | |
| *McAlpine Creek: Tributary 1:* | |
| At the confluence with McAlpine Creek | •539 |
| Approximately 0.7 mile upstream of U.S. Highway 521 | •555 |
| **City of Charlotte, Mecklenburg County (Unincorporated Areas)** | |
| *McAlpine Creek Tributary 1A:* | |
| At the confluence with McAlpine Creek Tributary 1 | •539 |
| Approximately 500 feet upstream of Ballantyne Commons Parkway | •568 |
| **Mecklenburg County (Unincorporated Areas)** | |
| *McAlpine Creek Tributary 3:* | |
| At the confluence with McAlpine Creek: | •561 |
| Approximately 550 feet upstream of Providence Road | •596 |
| **City of Charlotte** | |
| *McAlpine Creek Tributary 6:* | |
| At the confluence with McAlpine Creek | •668 |
| Approximately 1.1 miles upstream of the confluence with McAlpine Creek | •702 |
| **City of Charlotte, Mecklenburg County (Unincorporated Areas)** | |
| *McCullough Creek:* | |
| At the confluence with Sugar Creek | •540 |
| Approximately 450 feet upstream of Nations Ford Road | •565 |
| **City of Charlotte, Mecklenburg County (Unincorporated Areas)** | |
| *McDowell Creek:* | |
| At the confluence with Mountain Island Lake | •655 |
| Approximately 400 feet upstream of Statesville Road | •741 |
| **Towns of Huntersville and Cornelius, Mecklenburg County (Unincorporated Areas)** | |
| *McDowell Creek Tributary 1* | |
| At the confluence with McDowell Creek | •665 |
| Approximately 0.7 mile upstream of McIlwaine Road | •671 |
| **Mecklenburg County (Unincorporated Areas)** | |
| *McDowell Creek Tributary 2:* | |
| At the confluence with McDowell Creek | •666 |
| Approximately 0.5 mile upstream of the confluence with McDowell Creek | •668 |
| **Mecklenburg County (Unincorporated Areas)** | |
| *McIntyre Creek:* | |
| Approximately 250 feet upstream of the confluence with Long Creek | •662 |
| Approximately 520 feet upstream of Lawnmeadow Drive | •745 |
| **City of Charlotte, Mecklenburg County (Unincorporated Areas)** | |
| *McKee Creek:* | |
| Approximately 1,650 feet downstream of Reedy Creek Road | •602 |
| Approximately 600 feet upstream of Denbur Drive | •662 |
| **Mecklenburg County (Unincorporated Areas)** | |
| *McMullen Creek:* | |
| At the confluence with McAlpine Creek | •534 |
| Approximately 0.8 mile upstream of Addison Drive | •685 |
| **City of Charlotte, Town of Pineville, Mecklenburg County (Unincorporated Areas)** | |
| *McMullen Creek Tributary:* | |
| At the confluence with McMullen Creek | •667 |
| Approximately 150 feet upstream of S. Sharon Amity Road | •687 |
| **City of Charlotte** | |
| *North Prong Clarke Creek:* | |
| At the confluence with Clarke Creek | •637 |
| Approximately 1,500 feet upstream of Ramah Church Road | •685 |
| **Town of Huntersville, Mecklenburg County (Unincorporated Areas)** | |
| *Paw Creek:* | |
| At First Norfolk Southern Railroad Crossing | •572 |

| Source of flooding and location | #Depth in feet above ground. * Elevation in feet (NGVD) •Elevation in feet (NAVD) |
|---|---|
| Approximately 0.06 mile upstream of Second Norfolk Southern Railroad Crossing | •717 |
| **City of Charlotte, Mecklenburg County (Unincorporated Areas)** | |
| *Paw Creek Tributary:* | |
| At the confluence with Paw Creek | •607 |
| Approximately 0.8 mile upstream of the confluence with Paw Creek | •655 |
| **Mecklenburg County (Unincorporated Areas)** | |
| *Paw Creek Tributary 1A:* | |
| At the confluence with Paw Creek | •647 |
| Approximately 50 feet upstream of Freedom Drive | •674 |
| **City of Charlotte** | |
| *Polk Ditch:* | |
| At the confluence with Walker Branch | •569 |
| Approximately 300 feet upstream of Highway 49 | •602 |
| **City of Charlotte, Mecklenburg County (Unincorporated Areas)** | |
| *Ramah Creek:* | |
| At the confluence with Clarke Creek | •630 |
| Approximately 300 feet upstream of Highway 73 | •722 |
| **Mecklenburg County (Unincorporated Areas)** | |
| *Rea Branch:* | |
| At the confluence with McAlpine Creek | •547 |
| Approximately 210 feet upstream of Sequoia Red Lane | •568 |
| **City of Charlotte** | |
| *Reedy Creek:* | |
| Approximately 0.4 mile downstream of Reedy Creek Road | •608 |
| Approximately 0.75 mile upstream of Plaza Road Extension | •664 |
| **City of Charlotte, Mecklenburg County (Unincorporated Areas)** | |
| *Reedy Creek Tributary 1:* | |
| At the County boundary | •625 |
| Approximately 1,680 feet upstream of County boundary | •634 |
| **Mecklenburg County (Unincorporated Areas)** | |
| *Reedy Creek Tributary 2:* | |
| At the confluence with Reedy Creek | •626 |
| Approximately 1.2 miles upstream of Robinson Church Road | •664 |
| **Mecklenburg County (Unincorporated Areas)** | |
| *Reedy Creek Tributary 3:* | |
| At the confluence with Reedy Creek | •639 |
| Approximately 100 feet upstream of Chapparall Lane | •710 |
| **City of Charlotte, Mecklenburg County (Unincorporated Areas)** | |
| *Rocky Branch:* | |
| At the confluence with Four Mile Creek | •558 |
| Approximately 700 feet upstream of Providence Road | •627 |
| **City of Charlotte** | |
| *Rocky River:* | |
| Approximately 250 feet upstream of the confluence of West Branch Rocky River | •647 |
| Approximately 2.3 miles upstream of East Rocky River Road | •687 |
| **Town of Davidson, Mecklenburg County (Unincorporated Areas)** | |
| *Rocky River Tributary:* | |
| Approximately 560 feet downstream of Interstate 85 | •604 |
| Approximately .5 mile upstream of Interstate 85 | •622 |
| **Mecklenburg County (Unincorporated Areas)** | |
| *Sardis Branch:* | |
| At the confluence with McAlpine Creek | •573 |
| Approximately 810 feet upstream of Sardis Road | •636 |
| **City of Charlotte, Mecklenburg County (Unincorporated Areas)** | |
| *Sherman Branch:* | |
| At the confluence with Clear Creek | •571 |
| Approximately 0.5 mile upstream of Cabarrus Road | •614 |
| **Mecklenburg County (Unincorporated Areas)** | |
| *Sixmile Creek:* | |
| At the Lancaster County/South Carolina boundary | •575 |
| Approximately 0.6 mile upstream of Tiley Morris Road | •664 |
| **City of Charlotte, Mecklenburg County (Unincorporated Areas)** | |
| *South Prong Clarke Creek:* | |
| At the confluence with Clarke Creek | •637 |
| Approximately 1.4 miles upstream of Asbury Chapel Road | •676 |
| **Mecklenburg County (Unincorporated Areas)** | |
| *South Prong West Branch Rocky River:* | |
| At the confluence with West Branch Rocky River | •656 |
| Approximately 1.7 miles upstream of Davidson-Concorde Road | •706 |
| **Town of Davidson, Mecklenburg County (Unincorporated Areas)** | |
| *South Prong West Branch Rocky River Tributary:* | |
| At the confluence with South Prong West Branch Rocky River | •680 |
| Approximately 0.9 mile upstream of the confluence with South Prong West Branch Rocky River | •702 |
| **Mecklenburg County (Unincorporated Areas)** | |
| *Steele Creek:* | |
| At the State boundary | •569 |
| Approximately 100 feet upstream of Brown-Grier Road | •628 |
| **City of Charlotte, Mecklenburg County (Unincorporated Areas)** | |
| *Stevens Creek:* | |
| At the Union County boundary | •627 |
| Approximately 0.5 mile upstream of Thompson Road | •682 |
| **Town of Mint Hill, Mecklenburg County (Unincorporated Areas)** | |
| *Stevens Creek Tributary:* | |
| At the confluence with Stevens Creek | •643 |
| Approximately 0.5 mile upstream of Thompson Road | •662 |
| **Town of Mint Hill** | |
| *Stewart Creek:* | |
| At the confluence with Irwin Creek | •640 |
| Approximately 650 feet upstream of Capps Hill Mine Road | •726 |
| **City of Charlotte, Mecklenburg County (Unincorporated Areas)** | |
| *Stewart Creek Tributary 1:* | |
| At the confluence with Stewart Creek | •640 |
| Approximately 1,500 feet upstream of Berryhill Road | •663 |
| **City of Charlotte** | |
| *Stewart Creek Tributary 2:* | |
| At the confluence with Stewart Creek | •651 |
| At the upstream side of Interstate 85 | •706 |
| **City of Charlotte** | |
| *Stewart Creek Tibutary 3:* | |
| At the confluence with Stewart Creek | •675 |
| Approximately 0.4 mile upstream of Hoskins Road | •724 |
| **City of Charlotte** | |
| *Stony Creek:* | |
| At the confluence with Mallard Creek | •591 |

| Source of flooding and location | #Depth in feet above ground. * Elevation in feet (NGVD) •Elevation in feet (NAVD) |
|---|---|
| Approximately 0.5 mile upstream of Mallard Creek Road | •701 |
| **City of Charlotte, Mecklenburg County (Unincorporated Areas)** | |
| *Stony Creek Tributary:* | |
| Approximately 650 feet upstream of the confluence with Stony Creek | •640 |
| Approximately 1 mile upstream of Mallard Creek Road | •714 |
| **City of Charlotte, Mecklenburg County (Unincorporated Areas)** | |
| *Stowe Branch:* | |
| At the confluence with Lake Wylie | •571 |
| Approximately 140 feet upstream of Shopton Road | •598 |
| **Mecklenburg County (Unincorporated Areas)** | |
| *Sugar Creek:* | |
| Approximately 0.8 mile downstream of the confluence of McCullough Branch | •538 |
| At the confluence of Taggart Creek | •607 |
| **City of Charlotte, Town of Pineville, Mecklenburg County (Unincorporated Areas)** | |
| *Swan Run:* | |
| At the confluence with McAlpine Creek | •561 |
| Approximately 1 mile upstream of Sharon View Road | •597 |
| **City of Charlotte** | |
| *Taggart Creek:* | |
| At the confluence with Sugar Creek | •607 |
| At the upstream side of Denver Avenue | •682 |
| **City of Charlotte, Mecklenburg County (Unincorporated Areas)** | |
| *Ticer Branch:* | |
| At the confluence with Paw Creek | •578 |
| Approximately 0.5 mile upstream of Wilkinson Boulevard | •645 |
| **City of Charlotte, Mecklenburg County (Unincorporated Areas)** | |
| *Toby Creek:* | |
| At the confluence with Mallard Creek | •599 |
| Approximately 0.7 mile upstream of West Rocky River Road | •679 |
| **City of Charlotte** | |
| *Torrence Creek:* | |
| At the confluence with McDowell Creek | •672 |
| Approximately 0.5 mile upstream of I–77 | •733 |
| **Town of Huntersville, Mecklenburg County (Unincorporated Areas)** | |
| *Torrence Creek Tributary 1:* | |
| At the confluence with Torrence Creek | •673 |
| Approximately 1,000 feet upstream of Statesville Road | •727 |
| **Town of Huntersville, Mecklenburg County (Unincorporated Areas)** | |
| *Torrence Creek Tributary 2:* | |
| At the confluence with Torrence Creek | •678 |
| Approximately 400 feet upstream of I–77 | •721 |
| **Town of Huntersville, Mecklenburg County (Unincorporated Areas)** | |
| *Walker Branch:* | |
| At the State boundary | •569 |
| Approximately 0.3 mile upstream of Highway 49 | •596 |
| **Mecklenburg County (Unincorporated Areas)** | |
| *Walker Branch Tributary:* | |
| At the confluence with Walker Branch | •583 |
| Approximately 2,500 feet upstream of Steele Creek Road | •609 |
| **City of Charlotte, Mecklenburg County (Unincorporated Areas)** | |
| *West Branch Rocky River:* | |
| Approximately 0.5 mile upstream of the confluence with Rocky River | •647 |
| Approximately 1,200 feet upstream of Grey Road | •687 |
| **Town of Davidson, Mecklenburg County (Unincorporated Areas)** | |
| *West Branch Rocky River Tributary:* | |
| At the confluence with West Branch Rocky River | •672 |
| Approximately 900 feet upstream of Davis Road | •707 |
| **Town of Davidson, Mecklenburg County (Unincorporated Areas)** | |
| **City of Charlotte** | |
| **Maps available for inspection** at the Mecklenburg County Stormwater Planning Department, 700 North Tryon Street, Charlotte, North Carolina. | |
| **Town of Cornelius** | |
| **Maps available for inspection** at the Cornelius Planning Department, 21445 Catawba Avenue, Cornelius, North Carolina. | |
| **Town of Davidson** | |
| **Maps available for inspection** at the Davidson Town Hall/Planning Department, 216 South Main Street, Davidson, North Carolina. | |
| **Town of Huntersville** | |
| **Maps available for inspection** at the Town of Huntersville Planning Department, 101 Huntersville ''Concord Road, Huntersville, North Carolina. | |
| **Town of Matthews** | |
| **Maps available for inspection** at the Matthews Town Hall, 232 Matthews Station Street, Matthews, North Carolina. | |
| **Mecklenburg County (Unincorporated Areas)** | |
| **Maps available for inspection** at the Mecklenburg County Storm Water Planning Department, 700 North Tryon Street, Charlotte, North Carolina. | |
| **Town of Mint Hill** | |
| **Maps available for inspection** at the Mint Hill Town Hall, 7151 Matthews Mint Hill Road, Mint Hill, North Carolina. | |
| **Town of Pineville** | |
| **Maps available for inspection** at the Mecklenburg County Storm Water Planning Department, 700 North Tryon Street, Charlotte, North Carolina. | |
| **Pitt County (FEMA Docket Nos. D–7536 and D–7562)** | |
| *Back Swamp:* | |
| At the confluence with Swift Creek | •40 |
| Approximately 1,600 feet upstream of Hanrahan Road | •63 |
| **Town of Grifton, Town of Ayden, Pitt County (Unincorporated Areas)** | |
| *Bates Branch:* | |
| Approximately 425 feet downstream of Tucker Road | •43 |
| Approximately 100 feet upstream of Tucker Road | •46 |
| **Village of Simpson** | |
| *Bells Branch:* | |
| At the confluence with Hardee Creek | •20 |

| Source of flooding and location | #Depth in feet above ground. * Elevation in feet (NGVD) •Elevation in feet (NAVD) |
|---|---|
| Approximately 2,000 feet upstream of confluence | •20 |
| **City of Greenville, Pitt County (Unincorporated Areas)** | |
| *Briery Swamp:* | |
| At the confluence with Tranaters Creek | •22 |
| Approximately 0.4 mile upstream of Staton Mill Road | •61 |
| **Pitt County (Unincorporated Areas)** | |
| *Briery Swamp Tributary:* | |
| At the confluence with Briery Swamp | •36 |
| Approximately 0.8 mile upstream of NC 903 | •44 |
| **Pitt County (Unincorporated Areas)** | |
| *Buckleberry Canal:* | |
| Approximately 0.5 mile upstream of Neuse River | •23 |
| Approximately 1.0 mile upstream of Stokestown-St. Johns Road | •27 |
| **Pitt County (Unincorporated Areas)** | |
| *Cheeks Mill Creek:* | |
| Approximately 0.5 mile upstream of the confluence with the Tar River | •37 |
| A backwater area from a point approximately 1.8 miles upstream of the confluence with the Tar River | •39 |
| **Pitt County (Unincorporated Areas)** | |
| *Chicod Creek:* | |
| At the confluence with the Tar River | •14 |
| Approximately 1,250 feet upstream of South Grimesland Bridge Road | •39 |
| **Pitt County (Unincorporated Areas)** | |
| *Clayroot Swamp:* | |
| At the confluence with Swift Creek | •19 |
| Approximately 1,300 feet upstream of Voa Site B Road | •42 |
| **Pitt County (Unincorporated Areas)** | |
| *Clayroot Swamp Tributary 1:* | |
| At the confluence with Clayroot Swamp | •34 |
| Approximately 0.5 mile upstream of Stokestown-St. Johns Road | •46 |
| **Pitt County (Unincorporated Areas)** | |
| *Conetoe Creek:* | |
| At the confluence with the Tar River | •31 |
| At the confluence of Crisp Creek | •48 |
| **Pitt County (Unincorporated Areas)** | |
| *Contentnea Creek:* | |
| At the confluence with Neuse River | •24 |
| At the confluence of Little Contentnea Creek | •31 |
| **Town of Grifton, Pitt County (Unincorporated Areas)** | |
| *Cow Swamp:* | |
| At the confluence with Chicod Creek | •19 |
| Approximately 2.6 miles upstream of Black Jack-Simpson Road | •46 |
| **Pitt County (Unincorporated Areas)** | |
| *Creeping Swamp:* | |
| At the confluence with Clayroot Swamp | •21 |
| Approximately 0.9 mile upstream of Cayton Road | •47 |
| **Pitt County (Unincorporated Areas)** | |
| *Crisp Creek:* | |
| At the confluence with Conetoe Creek | •48 |
| Approximately 0.5 mile downstream of Interstate 64 | •51 |
| **Pitt County (Unincorporated Areas), Town of Bethel** | |
| *Cross Swamp:* | |
| At the confluence with Cow Swamp | •33 |
| Approximately 0.6 mile upstream of Black Jack-Grimesland Road | •37 |
| **Pitt County (Unincorporated Areas)** | |
| *Flat Swamp:* | |
| At the confluence with Tranters Creek | •39 |
| Approximately 0.4 mile upstream of James Road | •42 |
| *Fork Swamp:* | |
| At the confluence with Swift Creek | •34 |
| Approximately 1,770 feet upstream of Fire Tower Road | •59 |
| *City of Greenville, Town of Winterville, Pitt County (Unincorporated Areas)* | |
| *Fork Swamp Tributary 1:* | |
| At the confluence with Fork Swamp | •52 |
| Approximately 0.7 mile upstream of Old Tar Road | •61 |
| **City of Greenville, Town of Winterville, Pitt County (Unincorporated Areas)** | |
| *Fork Swamp Tributary 2:* | |
| At the confluence with Fork Swamp | •53 |
| Approximately 0.8 mile upstream of the confluence with Fork Swamp | •58 |
| **City of Greenville, Pitt County (Unincorporated Areas)** | |
| *Fornes Run:* | |
| At the confluence with Green Mill Run | •21 |
| Approximately 1,850 feet upstream of the confluence with Green Mill Run | •27 |
| **City of Greenville** | |
| *Green Mill Run:* | |
| At the confluence with the Tar River | •21 |
| Approximately 270 feet upstream of Allen Road | •70 |
| **City of Greenville, Pitt County (Unincorporated Areas)** | |
| *Grindle Creek:* | |
| Approximately 2.0 miles upstream of the confluence with the Tar River | •14 |
| Approximately 500 feet upstream of U.S. 13/NC 11 | •39 |
| **Pitt County (Unincorporated Areas)** | |
| *Grindle Creek Tributary:* | |
| At the confluence with Grindle Creek | •20 |
| Approximately 0.6 mile upstream of railroad | •30 |
| **Pitt County (Unincorporated Areas)** | |
| *Gum Swamp:* | |
| At the confluence with Swift Creek | •56 |
| Approximately 1.1 miles upstream of the confluence with Swift Creek | •63 |
| **City of Greenville, Pitt County (Unincorporated Areas)** | |
| *Hardee Creek:* | |
| At the confluence with the Tar River | •20 |
| Approximately 1.1 miles upstream of Herman Garris Road | •57 |
| **City of Greenville, Pitt County (Unincorporated Areas)** | |
| *Hardee Creek Tributary:* | |
| Approximately 810 feet upstream of the confluence with Hardee Creek | •37 |
| Approximately 425 feet upstream of Joseph Street | •43 |
| **City of Greenville** | |
| *Harris Mill Run:* | |
| At the confluence with the Tar River | •25 |
| Approximately 0.4 mile upstream of Interstate 264 | •60 |
| **City of Greenville, Pitt County (Unincorporated Areas)** | |
| *Horse Swamp:* | |
| At the confluence with Swift Creek | •49 |
| Approximately 1,375 feet upstream of Jolly Road | •52 |
| **Pitt County (Unincorporated Areas)** | |
| *Hunting Run:* | |
| At the confluence with Grindle Creek | •21 |
| Approximately 1.5 miles upstream of the confluence with Grindle Creek | •29 |
| **Pitt County (Unincorporated Areas)** | |
| *Indian Well Swamp:* | |
| At the confluence with Clayroot Swamp | •31 |
| Approximately 0.4 mile upstream of Grover Hardee Road | •38 |

| Source of flooding and location | #Depth in feet above ground. * Elevation in feet (NGVD) •Elevation in feet (NAVD) |
|---|---|
| **Pitt County (Unincorporated Areas)** | |
| *Indian Well Swamp Tributary:* | |
| At the confluence with Indian Well Swamp | •37 |
| Approximately 800 feet upstream of Stanley Road | •42 |
| **Pitt County (Unincorporated Areas)** | |
| *Island Swamp:* | |
| At the confluence with Chicod Creek | •35 |
| Approximately 0.9 mile upstream of South Grimesland Bridge Road | •44 |
| **Pitt County (Unincorporated Areas)** | |
| *Jacob Branch:* | |
| Approximately 0.1 mile downstream of Stantonsburg Road | •64 |
| Approximately 0.4 mile upstream of Hog Market Road | •83 |
| **Pitt County (Unincorporated Areas)** | |
| *Johnsons Mill Run:* | |
| At the confluence with the Tar River | •25 |
| Approximately 80 feet downstream of Staton House Road | •32 |
| **Pitt County (Unincorporated Areas), City of Greenville** | |
| *Johnsons Mill Run Tributary:* | |
| At the confluence with Johnsons Mill Run | •26 |
| Approximately 900 feet downstream of Barrus Construction Road | •31 |
| **Pitt County (Unincorporated Areas), City of Greenville** | |
| *Juniper Branch:* | |
| At the confluence with Chicod Creek | •15 |
| Approximately 0.4 mile upstream of Ivy Road | •47 |
| **Pitt County (Unincorporated Areas)** | |
| *Kitten Creek:* | |
| At the confluence with Otters Creek | •36 |
| Approximately 1.6 miles upstream of Dilda Church Road | •77 |
| **Pitt County (Unincorporated Areas), Town of Fountain** | |
| *Langs Mill Run:* | |
| Approximately 125 feet upstream of Stantonsburg Road | •64 |
| At County boundary | •95 |
| **Town of Fountain, Town of Farmville, Pitt County (Unincorporated Areas)** | |
| *Lateral No. 1:* | |
| Approximately 150 feet upstream of the confluence with Parkers Creek | •23 |
| At Interstate 13 | •24 |
| **City of Greenville** | |
| *Lawrence Run:* | |
| At the confluence with Tyson Creek | •33 |
| Approximately 1.8 miles upstream of NC 121 | •58 |
| **Pitt County (Unincorporated Areas)** | |
| *Little Contentnea Creek:* | |
| At the confluence of Contentnea Creek | •31 |
| Approximately 500 feet upstream of Highway 264 | •73 |
| **Pitt County (Unincorporated Areas)** | |
| *Little Contentnea Creek Tributary 1:* | |
| Approximately 0.5 mile upstream of the confluence with Little Contentnea Creek | •33 |
| Approximately 1,275 feet upstream of North Carolina State Route 102 | •42 |
| **Pitt County (Unincorporated Areas)** | |
| *Little Contentnea Creek Tributary 2:* | |
| At the confluence with Little Contentnea Creek | •50 |
| Approximately 0.6 mile upstream of Nash Joyner Road | •68 |
| **Pitt County (Unincorporated Areas)** | |
| *Little Contentnea Creek Tributary 3:* | |
| At the confluence with Little Contentnea Creek Tributary 2 | •61 |
| Approximately 200 feet downstream of Bell Arthur Road | •68 |
| **Pitt County (Unincorporated Areas)** | |
| *Meadow Branch:* | |
| At the confluence with Briery Swamp | •22 |
| Approximately 0.7 mile upstream of Sheppard Mill Road | •47 |
| **Pitt County (Unincorporated Areas)** | |
| *Middle Swamp Creek:* | |
| Approximately 0.5 mile downstream of U.S. Highway 258 | •59 |
| Approximately 175 feet upstream of U.S. 264 Alternate | •76 |
| **Town of Farmville, Pitt County (Unincorporated Areas)** | |
| *Mill Branch:* | |
| At the confluence with Whichard Branch | •41 |
| Approximately 0.4 mile upstream of Staton Mill Road | •59 |
| **Pitt County (Unincorporated Areas)** | |
| *Neuse River:* | |
| Approximately 1,500 feet southwest of Cannon Price Road along the Pitt/Craven County boundary | •22 |
| At the confluence with Contentnea Creek | •24 |
| **Pitt County (Unincorporated Areas)** | |
| *North Fork Green Mill Run:* | |
| Approximately 175 feet upstream of the confluence with Green Mill Run | •56 |
| Approximately 1,100 feet upstream of Spring Forest Road | •69 |
| **City of Greenville, Pitt County (Unincorporated Areas)** | |
| *Otter Creek:* | |
| At the confluence with the Tar River | •33 |
| Approximately 0.8 mile downstream of Edgewood Church Road | •51 |
| **Pitt County (Unincorporated Areas), Town of Falkland** | |
| *Otter Creek Tributary:* | |
| At the confluence with Otter Creek | •48 |
| Approximately 200 feet upstream of the confluence with Otter Creek | •48 |
| **Pitt County (Unincorporated Areas)** | |
| *Parkers Creek:* | |
| At the confluence with the Tar River | •22 |
| Approximately 800 feet upstream of Staton Road | •26 |
| **City of Greenville** | |
| *Pea Branch:* | |
| At the confluence with Tranters Creek | •15 |
| Approximately 400 feet upstream of Satterthwaite Road | •26 |
| **Pitt County (Unincorporated Areas)** | |
| *Pinelog Branch:* | |
| At the confluence with Little Contentnea Creek | •52 |
| At the downstream side of Railroad | •52 |
| **Pitt County (Unincorporated Areas)** | |
| *Poley Branch:* | |
| At the confluence with Tranters Creek | •15 |
| Approximately 2,000 feet upstream of Sheppard Mill Road | •25 |
| **Pitt County (Unincorporated Areas)** | |
| *Swift Creek:* | |
| At the confluence of Clayroot Swamp | •19 |

| Source of flooding and location | #Depth in feet above ground. *Elevation in feet (NGVD) •Elevation in feet (NAVD) |
|---|---|
| Approximately 0.4 mile upstream of Davenport Farm Road | •59 |
| **City of Greenville, Towns of Winterville and Ayden, Pitt County (Unincorporated Areas)** | |
| *Swift Creek Tributary 1:* | |
| At the confluence with Swift Creek | •47 |
| Approximately 525 feet upstream of Jolly Road | •56 |
| **Town of Ayden, Pitt County (Unincorporated Areas)** | |
| *Swift Creek Tributary 2:* | |
| At the confluence with Swift Creek | •53 |
| Approximately 0.6 mile upstream of Red Forbes Road | •61 |
| **Town of Winterville, Pitt County (Unincorporated Areas)** | |
| *Tar River:* | |
| Approximately 1.8 miles upstream of the confluence with Bear Creek | •9 |
| At the county boundary | •37 |
| **Pitt County (Unincorporated Areas), Town of Falkland, City of Greenville** | |
| *Thomas Canal:* | |
| At the confluence with Conetoe Creek | •46 |
| Approximately 900 feet upstream of Bowers Road | •49 |
| **Pitt County (Unincorporated Areas) Town of Bethel** | |
| *Thorofare Swamp:* | |
| At the confluence with Clayroot Swamp | •37 |
| Approximately 1.3 miles upstream of confluence with Clayroot Swamp | •41 |
| **Pitt County (Unincorporated Areas)** | |
| *Tranters Creek:* | |
| Approximately 2.5 miles upstream of the confluence with the Tar River | •9 |
| Approximately 1.3 miles upstream of the confluence with Flat Swamp | •49 |
| **Pitt County (Unincorporated Areas)** | |
| *Tributary to Little Contentnea Creek Tributary 1:* | |
| At confluence with Little Contentnea Creek Tributary 1 | •33 |
| Approximately 0.5 mile upstream of the confluence with Little Contentnea Creek Tributary 1 | •39 |
| **Pitt County (Unincorporated Areas)** | |
| *Tyson Creek:* | |
| At the confluence with the Tar River | •30 |
| Approximately 1.3 miles upstream of Seven Pines Road | •65 |
| **Pitt County (Unincorporated Areas), Town of Falkland** | |
| *Ward Run:* | |
| At the confluence with Little Contentnea Creek | •81 |
| At County boundary | •92 |
| **Pitt County (Unincorporated Areas)** | |
| *Whichard Branch:* | |
| At the confluence with Grindle Creek | •32 |
| Approximately 0.8 mile upstream of David Nobles Road | •53 |
| **Pitt County (Unincorporated Areas)** | |
| **Town of Ayden** | |
| **Maps available for inspection** at the Ayden Town Planning Department, 4061 East Avenue, Ayden, North Carolina. | |
| **Town of Bethel** | |
| **Maps available for inspection** at County Planning Department, Development Services Building, 1717 West 5th Street, Greenville, North Carolina. | |
| **Town of Falkland** | |
| **Maps available for inspection** at the Town of Falkland Community Building, Main Street, Falkland, North Carolina. | |
| **Town of Farmville** | |
| **Maps available for inspection** at the Farmville Town Hall, 200 North Main Street, Farmville, North Carolina. | |
| **Town of Fountain** | |
| **Maps available for inspection** at the Fountain Town Hall, 6777 West Wilson, Fountain, North Carolina. | |
| **City of Greenville** | |
| **Maps available for inspection** at the Greenville Community Planning Development Building, 306 South Green Street, Greenville, North Carolina. | |
| **Town of Grifton** | |
| **Maps available for inspection** at the Grifton Town Hall, 528 Queen Street, Grifton, North Carolina. | |
| **Pitt County Unincorporated Areas** | |
| **Maps available for inspection** at the Pitt County Planning Department, Development Services Building, 1717 West 5th Street, Greenville, North Carolina. | |
| **Village of Simpson** | |
| **Maps available for inspection** at the Pitt County Planning Department, Development Services Building, 1717 West 5th Street, Greenville, North Carolina. | |
| **Town of Winterville** | |
| **Maps available for inspection** at the Winterville Planning Department, 2571 Railroad Street, Winterville, North Carolina. | |
| **NEW YORK** | |
| **Schoharie County (FEMA Docket No. D–7562)** | |
| *Cobleskill Creek:* | |
| At the confluence with Schoharie Creek | •596 |
| Approximately 0.51 mile upstream of State Route 7 | •927 |
| **Town of Schoharie, Town and Village of Cobleskill, Town of Richmondville, Town of Esperance** | |
| *Fly Creek:* | |
| At the confluence with Schoharie Creek | •591 |
| Approximately 1,870 feet upstream of U.S. Route 20 | •710 |
| **Town of Esperance** | |
| *Fox Creek:* | |
| Approximately 0.6 mile upstream of the confluence with Schoharie Creek | •606 |
| Approximately 1,850 feet downstream of Debritko Road | •653 |
| **Town of Schoharie, Village of Schoharie, Town of Wright** | |
| *Line Creek:* | |
| At the confluence with Schoharie Creek | •642 |
| Approximately 1,655 feet upstream of West Middleburgh Road | •788 |
| **Town of Middleburgh, Town of Fulton** | |
| *Mill Creek:* | |
| At the confluence with Cobleskill Creek | •899 |
| Approximately 0.63 mile upstream of Quarry Street | •1,067 |
| **Town and Village of Cobleskill** | |
| *Schoharie Creek:* | |
| At downstream Schoharie County boundary | •541 |

| Source of flooding and location | #Depth in feet above ground. * Elevation in feet (NGVD) •Elevation in feet (NAVD) |
|---|---|
| Approximately 0.45 mile upstream of Town of Fulton and Middleburgh corporate limits | •668 |
| **Town and Village of Esperance, Town of Fulton, Town and Village of Middleburgh, Town and Village of Schoharie** | |
| *School House Creek:* | |
| At confluence with Stoney Creek | •638 |
| Approximately 0.61 mile upstream of Straub Lane | •792 |
| **Village and Town of Middleburgh** | |
| *Stoney Creek:* | |
| At confluence with Schoharie Creek | •638 |
| Approximately 1,620 feet upstream of U.S. Route 145 | •758 |
| **Village and Town of Middleburgh** | |
| **Town of Cobleskill** | |
| **Maps available for inspection** at the Cobleskill Town Office, 2668 State Route 7, Suite 37, Cobleskill, New York. | |
| **Village of Cobleskill** | |
| Maps available for inspection at the Cobleskill Village Planning Department, 378 Mineral Springs Road, Suite 5, Cobleskill, New York. | |
| **Town of Esperance** | |
| **Maps available for inspection** at the Esperance Town Hall, 104 Charleston Street, Esperance, New York. | |
| **Village of Esperance** | |
| Maps available for inspection at the Esperance Village Hall, Church Street, Esperance, New York. | |
| **Town of Fulton** | |
| Maps available for inspection at the Fulton Town Office, 1168 Bear Ladder Road, West Fulton, New York. | |
| **Town of Middleburgh** | |
| Maps available for inspection at the Middleburgh Town Hall, 146 Railroad Avenue, Middleburgh, New York. | |
| **Village of Middleburgh** | |
| **Maps available for inspection** at the Middleburgh Village Municipal Building, 309 Main Street, Middleburgh, New York. | |
| **Town of Richmondville** | |
| **Maps available for inspection** at the Richmondville Town Clerk's Office, 340 Main Street, Richmondville, New York. | |
| **Town of Schoharie** | |
| **Maps available for inspection** at the Schoharie Town Office, 289 Main Street, Schoharie, New York. | |
| **Village of Schoharie** | |
| **Maps available for inspection** at the Schoharie Village Office, 256 Main Street, Schoharie, New York. | |
| **Town of Wright** | |
| **Maps available for inspection** at the Wright Town Hall, 105 School Street, Suite 1, Gallupville, New York. | |

(Catalog of Federal Domestic Assistance No. 83.100, ''Flood Insurance'')

Dated: November 18, 2003.

**Anthony S. Lowe,**

*Mitigation Division Director, Emergency Preparedness and Response Directorate.*

[FR Doc. 03–29796 Filed 11–28–03; 8:45 am]

**BILLING CODE 6718–04–P**

## DEPARTMENT OF TRANSPORTATION

## National Highway Traffic Safety Administration

## 49 CFR Parts 571 and 586

**[Docket No. NHTSA–03–16523]**

**RIN 2127–AF36**

## Federal Motor Vehicle Safety Standards; Fuel Systems Integrity

**AGENCY:** National Highway Traffic Safety Administration (NHTSA), Department of Transportation (DOT).

**ACTION:** Final rule.

**SUMMARY:** In this document, NHTSA is upgrading the rear impact test in the Federal motor vehicle safety standard on fuel system integrity. To simulate being struck in the rear by another vehicle, that standard currently specifies that the full width of the rear of the test vehicle be impacted with a flat, rigid barrier at speeds up to 48 km/h (30 mph). This final rule replaces that full rear impact test procedure with an offset rear impact test procedure specifying that only a portion of the width of the rear of the test vehicle be impacted at 80 km/h (50 mph). Under the new rear impact procedure, a lighter, deformable barrier is used. The barrier is very similar to the one used for dynamic testing in the agency's side impact protection standard, except that the rear impact barrier's face is mounted slightly lower to simulate the diving of the front end of a vehicle during pre-crash braking. The agency has concluded that the new, more stringent rear impact test procedure will save lives and prevent injuries.

This final rule replaces the standard's lateral (side) impact test procedure with the procedure specified in the agency's side impact protection standard at an impact speed range of 53 ± 1 km/h. The agency has concluded that this change will provide a more realistic test, increase safety, and reduce testing costs.

**DATES:** This final rule is effective January 30, 2004. Voluntary compliance is permitted on or after that date. If you wish to submit a petition for reconsideration of this rule, your petition must be received by January 15, 2004.

**ADDRESSES:** You may submit petitions for reconsideration [identified by DOT DMS Docket Number] by any of the following methods:

- Web Site: *http://dms.dot.gov.* Follow the instructions for submitting comments on the DOT electronic docket site.
- Fax: (202) 493–2251.
- *Mail:* Docket Management Facility; U.S. Department of Transportation, 400 Seventh Street, SW., Nassif Building, Room PL–401, Washington, DC 20590–001.
- *Hand Delivery:* Room PL–401 on the plaza level of the Nassif Building, 400 Seventh Street, SW., Washington, DC, between 9 a.m. and 5 p.m., Monday through Friday, except Federal Holidays.
- *Federal eRulemaking Portal:* Go to *http://www.regulations.gov.* Follow the online instructions for submitting comments.

*Instructions:* All submissions must include the agency name and docket number or Regulatory Identification Number (RIN) for this rulemaking. Note that all comments received will be posted without change to *http://dms.dot.gov,* including any personal information provided. Please see the Privacy Act heading under Regulatory Notices. *Docket:* For access to the docket to read background documents or comments received, go to *http://*

*dms.dot.gov* at any time or to Room PL–401 on the plaza level of the Nassif Building, 400 Seventh Street SW., Washington, DC, between 9 a.m. and 5 p.m., Monday through Friday, except Federal Holidays

**FOR FURTHER INFORMATION CONTACT:** For technical and other non-legal issues, you may call Dr. William J.J. Liu, Office of Crashworthiness Standards, Telephone: (202) 366–2264, Fax: (202)–366–4329.

For legal issues, you may call Mr. Chris Calamita, Office of Chief Counsel Telephone: (202) 366–2992, Fax: (202)–366–3820.

You may send mail to both of these officials at the National Highway Traffic Safety Administration, 400 Seventh Street SW., Washington, DC 20590.

You may call Docket Management at (202)–366–9324. You may visit the Docket on the plaza level at 400 Seventh Street SW., Washington, DC, from 10 a.m. to 5 p.m., Monday through Friday.

**SUPPLEMENTARY INFORMATION:**

**Table of Contents**

I. Background
A. Existing Standard
B. Safety Problem
II. 1995 Advance Notice of Proposed Rulemaking
III. 2000 Notice of Proposed Rulemaking
A. Proposed Rear Impact Test Procedure
B. Proposed Side Impact Test Procedure
C. Door System Integrity
D. Lead Time
E. Costs and Benefits
F. Request for Comments on Additional Issues
IV. Summary of Comments
A. Rear Impact Test Procedure Upgrade
B. Side Impact Test Procedure Upgrade
C. Door System Integrity
D. Lead Time
1. Rear Impact Test Upgrade
2. Side Impact Test Upgrade
E. Costs and Benefits
F. Additional Issues
1. Real World Data
2. Head and Neck Injury Criteria
3. Seat Back Failure
4. Use of 5th Percentile Female Dummies
5. Test Vehicle Loading Conditions
6. Lowering the Barrier Face
7. Pole Side Impact Test
8. Prohibiting Fuel Leakage in Frontal Impact Crash Tests
9. Compliance Responsibility of Second-Stage Manufacturers
10. Fuel Siphoning
V. Final Rule
A. Summary of the Final Rule
B. Rear Impact Test Procedure
C. Side Impact Test Procedure
D. Door System Integrity
E. Lead Time
1. Rear Impact Test Upgrade
2. Side Impact Test Upgrade
F. Benefits
G. Costs
H. Additional Issues
1. Real World Data
2. Head and Neck Injury Criteria
3. Seat Back Failure
4. Use of 5th Percentile Female Dummies
5. Test Vehicle Loading Conditions
6. Lowering the Barrier Face
7. Pole Side Impact Test
8. Prohibiting Fuel Leakage in Frontal Impact Crash Tests
9. Compliance Responsibility of Second-Stage Manufacturers
10. Fuel Siphoning
VI. Rulemaking Analyses and Notices

## I. Background

### *A. Existing Standard*

Standard No. 301, *Fuel system integrity,* sets performance requirements for the fuel systems of vehicles with a gross vehicle weight rating (GVWR) of 4,536 kg (10,000 pounds) or less. The standard, which was issued in the 1970s, limits the amount of fuel spillage from fuel systems of vehicles during and after being subjected to a frontal, rear, or side impact test.

In the frontal impact test, the test vehicle is driven forward into a fixed barrier at 48 km/h (30 mph). In the rear impact test, a 1,814 kg (4,000 pound) barrier moving at 48 km/h (30 mph) is guided into the full width of the rear of a stationary test vehicle. In the side impact test, a 1,814 kg (4,000 pound) barrier moving at 32 km/h (20 mph) is guided into the side of a stationary test vehicle. The standard sets three separate limits on fuel spillage from crash-tested vehicles: 28 grams (1 ounce) by weight, during the time period beginning with the start of the impact and ending with the cessation of vehicle motion; a total of 142 grams (5 ounces) by weight during the 5-minute time period beginning with the cessation of vehicle motion; and 28 grams (1 ounce) by weight during any 1-minute interval in the 25-minute period beginning with the end of the 5-minute period.

Similar fuel spillage limits apply to vehicles tested in accordance with the standard's static rollover test procedure.[1] The rollover test is conducted after frontal, rear, and side impact tests.

### *B. Safety Problem*

Preserving fuel system integrity in a crash is critical to preventing occupant exposure to fire. Although vehicle fires are relatively rare events (occurring in less than 1 percent of vehicles in towaway crashes), they tend to be severe in terms of the number of casualties caused. According to an analysis of data in the agency's Fatality Analysis Reporting System (FARS) in 2001, 3.5% percent (1,449 fatalities) of light vehicle occupant fatalities occurred in crashes involving fire.[2] Overall, the fire itself was deemed to be the most harmful event in the vehicle for about 24 percent (341) of these fatalities.

An analysis of 1993–2001 National Automotive Sampling System (NASS) data indicated that each year an average of about 15,820 occupants were exposed to a post-crash fire in passenger cars and light vehicles (vans, pickup trucks, and multipurpose passenger vehicles) with a GVWR of 4,536 kg (10,000 pounds) or less that were towed away after the fire. Of those occupants, about 736 (6 percent) received moderate or severe burns (AIS 2 and greater). Three-quarters of those with moderate and more severe burns had second or third degree burns over more than 90 percent of the body. Moreover, the agency notes that maximum-severity (AIS 6) burns are nearly always fatal. These statistics underscore the importance of preserving fuel system integrity in a crash in order to prevent vehicle fires.

## II. 1995 Advance Notice of Proposed Rulemaking

On April 12, 1995, NHTSA published an Advance Notice of Proposed Rulemaking (ANPRM) announcing the agency's plans to consider upgrading Standard No. 301.[3] The agency explained that it was considering using a three-phase approach to upgrade the requirements of the standard. Phase 1 would focus on requirements for component performance (*e.g.,* fuel tanks, fuel pumps, and electrical systems); Phase 2 would address system performance (*e.g.,* shutting down fuel supply and potential ignition sources in the event of a breach in the fuel system); and Phase 3 would address issues related to environmental and aging effects (*e.g.,* the potential relationship of vehicle aging to fire occurrence). The

[1] Under S5.6, *Fuel spillage; rollover.,* when a vehicle is rotated along its longitudinal axis to each successive increment of 90 degrees, fuel spillage from the onset of rotational motion must not exceed 142 grams (5 ounces) for the first 5 minutes of testing, at each successive 90 degree increment. For the remaining test period at each increment of 90 degrees, fuel spillage during any one minute interval must not exceed 28 g (1 ounce).

[2] These fatalities included fatalities due to burns and/or impact injuries, but not due to asphyxiation.

[3] 60 FR 18566. Previously, the agency published a Request for Comments notice stating that NHTSA was ''considering initiating rulemaking to upgrade the protection currently provided by'' Standard No. 301. 57 FR 59041, December 14, 1992; Docket No. 92–66, Notice 1. The notice also requested answers to specific questions related to test impact speeds, impact barriers, effect of vehicle aging on the likelihood of fire, contribution of occupant entrapment to the likelihood of fire-related injuries, *etc.*

agency sought comment on this approach as well as several other issues.

NHTSA received comments from component and vehicle manufacturers, industry associations, consumer advocacy organizations, and other organizations. After reviewing these comments and further analysis, the agency made the following decisions.

First, after examining the effectiveness of fuel pump shut-off devices in reducing post-crash vehicle fires, the agency decided not to pursue rulemaking with respect to fuel system component performance. The agency's review of NASS data did not reveal a significant difference in the rate or severity of post-crash fire occurrence in vehicles with and vehicles without fuel pump shut-off devices. Research conducted under the General Motors (GM) C/K settlement agreement [4] confirmed this finding during crash testing with and without fuel pump shut-off devices. During crash testing, there was no difference in the rate of fuel leakage or severity of post-crash fire occurrence between vehicles equipped with shut-off switches (Ford) and those without (GM, Chrysler and Honda).

Second, the agency decided not to pursue rulemaking related to environmental and aging effects. The agency agreed with vehicle manufacturer comments that further studies were needed to define the problems associated with environmental and aging effects and determine whether rulemaking would be appropriate to address them. The agency stated that it might revisit this issue upon further study. As part of the GM settlement, GM contracted with Southwest Research Institute to conduct research on the environmental factors and aging effects on fuel system components. This report showed some effects of corrosion on metal components and some effects of hot arid conditions on rubber components, and little effect on plastic components. The findings were inconclusive, but did not indicate serious problems affecting fuel system crash performance. No further agency action is planned at this time.[5]

Third, the agency decided to investigate the feasibility and practicability of upgrading Standard No. 301's rear and side impact requirements. The agency reviewed real world crash data to determine what types of rear impact crashes resulted in ''moderate,'' ''severe,'' and ''very severe'' fires.[6] Next, the agency analyzed the data to determine whether it was the fire or the impact of the crash that caused the fatalities and injuries in the fire-related crashes. NHTSA then examined the data to determine the characteristics of rear crashes that were causing fire-related fatalities and injuries and developed a new crash test procedure to simulate the most frequent crash scenario that leads to fire and fire-related fatalities and injuries in rear impact crashes. The agency then performed seventeen crash tests using the new crash test procedure.[7]

## III. 2000 Notice of Proposed Rulemaking

### *A. Proposed Rear Impact Test Procedure*

After reviewing the comments on the 1995 ANPRM and analyzing the real world crash data and data from the seventeen crash tests with the new crash test procedure, the agency published a Notice of Proposed Rulemaking (NPRM) on November 13, 2000.[8] In the NPRM, the agency tentatively concluded that the proposed rear impact test procedure would reduce fire-related fatalities and injuries from rear impact crashes. Thus, the agency proposed to replace Standard No. 301's current rear impact test procedure with one that would specify impacting the rear of the test vehicle at 80 ± 1 km/h (50 mph) with a 1,368 kg (3,015 pound) moving deformable barrier (MDB) at a 70 percent overlap with the test vehicle. That barrier is very similar to that used under Standard No. 214, *Side impact protection,* in dynamic side impact testing except that the face of the MDB used in rear impact testing under Standard No. 301 would be 50 mm (2 inches) lower than the face of the Standard No. 214 barrier to simulate pre-crash braking.[9]

The agency noted that the proposed test procedure would simulate a type of rear vehicle-to-vehicle collision that can result in post-crash fire in an otherwise survivable crash: a high speed offset rear strike to the vehicle that results in fuel leakage from a breach in the fuel system and, potentially, a rapidly spreading fire that results in fatalities and injuries. The agency also noted that NASS estimates show that the majority of fatal and nonfatal occupant burn injuries in rear impact crashes occurred in crashes in the 34 to 48 km/h (21 to 30 mph) delta-v range. The agency stated that the elements of the proposed offset rear impact test procedure were accordingly chosen to simulate vehicle-to-vehicle crashes with a delta-v range of 32 to 48 km/h (20 to 30 mph).

The agency tentatively concluded that the proposed offset rear impact test procedure was practicable. The agency stated:

> Crash test results indicate that large, medium, and small vehicles could be designed to meet the standard under the proposed upgraded rear impact procedure. In those tests, some small as well as large existing light-duty vehicles already meet the proposed upgrade. Several larger light-duty vehicles, including passenger cars, multipurpose passenger vehicles, and light trucks, all passed the proposed upgrade. In addition, several small vehicles, the Mazda Miata, Chevrolet Metro, Nissan Sentra, and Honda Civic, passed the proposed upgrade. While we are aware that some existing smaller vehicles leaked fuel when tested under the proposed upgraded test procedure (*e.g.*, the 1996 Suzuki Sidekick, Dodge Neon, and Geo Prizm, and the 1998 Chevrolet Cavalier, VW Jetta, and Ford Escort), we believe that relatively minor, inexpensive design changes would correct the vast majority of the failures.[10] For example, the fuel lines in the Dodge Neon could be rerouted, and the area on top of the tank around the fuel sender unit plastic sealing plate could be reinforced on the VW Jetta.[11]

NHTSA did not propose to require manufacturers to place each vehicle's

[4] On December 2, 1994, the Secretary of Transportation announced a settlement of an investigation by NHTSA of an alleged safety defect in certain GM pickup trucks with fuel tanks mounted outside the frame rails. Under that settlement, GM contributed over $51.3 million for a variety of safety initiatives. Among other things, the settlement funded research on ways to reduce the occurrence and effects of post-crash fires. All relevant results of this research are being placed in dockets NHTSA–98–3585, NHTSA–98–3588, Docket No. 96–GMRSCH–GR, and Docket No. 95–20–GR.

[5] *http://dms.dot.gov/search/document.cfm?doucmentid=183754&docketid=3588* Docket Number NHTSA–1988–3588–177 (Miller, Michael et al. ''First, Second and Third Progress Reports and Final Report—Inspection of Aging Vehicles and Testing Components'')

[6] A ''moderate'' fire is defined as fire damage to between 25 and 50 percent of the vehicle surface; a ''severe'' fire is fire damage to between 50 and 75 percent of the vehicle surface; and a ''very severe'' fire is fire damage to more than 75 percent of the vehicle surface.

[7] The rear impact tests used a 1,368 kg (3,015 pound) moving deformable barrier (MDB) with the barrier lowered by 50 mm (2 inches) to simulate pre-crash braking. The MDB impacted the test vehicle at 80 km/h (50 mph) parallel to the longitudinal centerline of the test vehicle with a 70 percent overlap on the side of the vehicle where the fuel filler neck was located. However, the new rear impact test allows the MDB to strike the rear with the overlap on either side of the vehicle for all possible worst case scenarios, including dual fuel tank designs with filler necks on both sides and filler neck in the center of the rear.

[8] 65 FR 67693, Docket No. NHTSA–2000–8248.

[9] Standard No. 214, Side Impact Protection, specifies that the bottom of the face of the barrier is 11 inches above the ground and the bottom of the bumper is 13 inches above the ground. See Figure 2.

[10] The Ford Mustang test series demonstrated the technical feasibility of redesigning a 1993 Ford Mustang so that it would pass the proposed upgrade test procedure (the 1996 Ford Mustang test). It demonstrated that structural and component design are critical, regardless of the fuel tank location, for passing the upgrade.

[11] 65 FR at 67701.

fuel tank forward of the rear axle, as suggested by Advocates for Highway and Auto Safety (Advocates) in its comment on the ANPRM, because the agency believed such a requirement would be unnecessary and too design restrictive. The agency noted that the fuel tank of the 1996 Ford Mustang, which passed the proposed upgraded test procedure, is located behind the rear axle. The agency stated that this test demonstrated that structural and component designs are more critical factors than fuel tank location in maintaining fuel system integrity.

NHTSA also did not propose to use a heavier barrier (*e.g.*, a 4,000-pound barrier) to simulate impacts by light trucks and sport utility vehicles, again as suggested by Advocates, because in an 80 km/h (50 mph) rear impact offset crash test, a 3,015-pound barrier effectively reproduces the damage profile seen in real world crashes that most often lead to fires. The agency stated that if a heavier barrier were used, the proposed rear impact crash test would no longer reproduce that profile. The agency also noted that it had conducted its research crash tests with a 3,015-pound barrier, and that further research and development would have to be conducted before a heavier barrier could be proposed for use in any test procedure.

*B. Proposed Side Impact Test Procedure*

NHTSA proposed to replace the current lateral (side) impact crash test in Standard No. 301 with the side impact crash test currently specified in Standard No. 214. The Standard No. 214 side impact crash test specifies that a stationary vehicle be struck on either side by a 1,368 kg (3,015 pound) MDB moving at a speed of 54 km/h.[12]

The agency reasoned that test analyses show that the Standard No. 214 side impact crash test exposes a tested vehicle to higher crush energy and crash forces, and to greater changes in velocity, than the existing Standard No. 301 side test. Test data also show the Standard No. 214 test exposes the fuel system components to greater forces.

Moreover, the agency reasoned that replacing the Standard No. 301 side test with the Standard No. 214 side impact test would reduce certification testing costs for manufacturers because they would only have to conduct one type of side impact test instead of two. The agency also noted that commenters on the ANPRM supported this change, stating that the change would be beneficial from both a safety and a cost perspective.

*C. Door System Integrity*

In the NPRM, the agency also stated that it was considering adding a post-crash door openability test requirement to Standard No. 206.[13] NHTSA noted that NASS data indicate that potential escape from a post-crash vehicle fire was made more difficult for occupants with moderate or more serious burns because, among other reasons, they were sitting next to a door that was jammed shut by crash forces. The agency also noted that real-world crash reports indicate that there were instances in which fire suddenly started several minutes after the vehicle was impacted. Thus, the agency concluded that it is critical that occupants be able to exit the vehicle quickly and easily after a crash that could lead to a fire. The agency requested comment on whether such a requirement was necessary and, if so, what type of requirements would be appropriate, objective, and repeatable.

*D. Lead Time*

NHTSA proposed a lead time of three years for the proposed upgraded rear impact test and one year for the change to the Standard No. 214 side impact test. The agency stated that a three-year lead time appeared to be necessary for the proposed upgraded rear impact test because: (1) All of a manufacturer's makes and models would have to be tested under the upgraded test to determine compliance; and (2) for those vehicles that did not comply, countermeasures would have to be incorporated into designs and then implemented in engineering and manufacturing. The agency stated that only one year of lead time was needed for the new side impact test because few, if any, design changes would be necessary.

NHTSA stated that between the date the final rule was issued and the date it took effect, manufacturers would be allowed the option of certifying vehicles under the existing Standard No. 301 tests or under the new tests. However, manufacturers would have to irrevocably select a test when they certified the vehicle.

*E. Costs and Benefits*

The agency prepared a Preliminary Regulatory Evaluation (PRE) describing the costs and benefits of the proposed upgraded test procedures.[14] NHTSA estimated that the average cost for vehicles that need to be modified to comply with Standard No. 301's requirements under the proposed test procedures would be $5 per vehicle. The agency also estimated that 46 percent of the vehicle fleet would have to be so modified.[15] Since approximately 15.2 million vehicles are sold in the United States each year, the agency estimated that the total cost of the proposed rule would be $35 million each year.

NHTSA estimated that the proposed rule would save from 8 to 21 lives annually, once all vehicles on the road meet Standard No. 301's requirements under the proposed upgraded test procedures.

*F. Request for Comments on Additional Issues*

In the NPRM, the agency also requested comments on several issues. The questions are repeated below.

1. Are there any real-world data, other than the data that the agency has already analyzed for this proposed upgrade, that may better describe the relationship between the risk of occupant injury due to fire and crash severity?

2. Vehicle manufacturers. How many of your vehicle models would need some redesign to comply with the proposed offset rear impact and side impact test procedures? Describe the type and extent of design changes. What costs would be associated with those redesigns? Would you have any significant problems completing necessary redesigns within the three-year lead time? If so, please identify those problems and indicate how much lead time you would need.

3. What impact would the proposed changes have on vehicle safety?

4. Are the proposals sufficient and appropriate for the different sizes and types of vehicles?

5. In the various crash tests that were performed during the research for this rulemaking, the values of head and neck injury criteria measured by the responses of the two front Hybrid III anthropomorphic test devices were

[12] Currently, Standard No. 214 specifies an impact speed of 54 km/h. In the NPRM, the agency proposed to change that specification in Standard No. 214 to 53 ± 1 km/h and adopt it for Standard No. 301. The agency noted that the new specification was very close to the speed (52.9 ± 0.8 km/h) at which NHTSA's Office of Vehicle Safety Compliance was conducting Standard No. 214 tests. As explained later, we are adopting this proposal. In addition, we are also adopting the proposal to delete several paragraphs of outdated requirements in Standard No. 214 that related solely to vehicles manufactured in the mid-1990s.

[13] Standard No. 206 specifies requirements for door locks and door retention components.

[14] A copy of the PRE was placed in the docket. See Docket No. NHTSA–2000–8248, entry 2.

[15] A NHTSA-sponsored cost study indicated that none of the proposed remedies for the noncompliant vehicles will require major structural redesign that will change the vehicle's structural stiffness (NHTSA Docket No. NHTSA–008248–4, Nov. 16, 2000).

much higher than acceptable thresholds. Direct contact of the head of the dummy with the interior of the vehicle compartment, which occurred when the front seat rotated backward excessively due to the rear impact, contributed to these high values. These high values raise concerns about head and neck protection of the occupants. The rear impact testing also raised concerns about the seat back strength, as most seat backs collapsed in those tests. What do the high HIC values and neck loadings registered by the test dummies in those tests indicate about the real world potential for trauma injury to vehicle occupants in rear impacts? Could future vehicles be designed to provide both the improved fuel system integrity necessary to meet the more stringent requirements proposed in this NPRM and, at the same time, provide improved occupant protection in such impacts?

6. How do seat back failures influence the injury potential in rear impacts? Please provide data and other information that would aid the agency in determining the need for improving seat back strength and the appropriate requirements for doing so.

7. Should the agency require vehicles to retain fuel system integrity in tests with 5th percentile female dummies, as well as with 50th percentile male dummies, as is currently required?

8. NHTSA is proposing to eliminate the second sentence in S7.1.6(b) from Standard No. 301. That sentence reads: ''If the weight on any axle, when the vehicle is loaded to unloaded vehicle weight plus dummy weight, exceeds the axle's proportional share of the test weight, the remaining weight shall be placed so that the weight on that axle remains the same.'' Given the specifications in S7.1.6(a) concerning the placement of rated cargo and luggage capacity weight in the luggage area and the placement of dummies, is the second sentence in S7.1.6(b) needed for conducting Standard No. 301 compliance tests?

9. For the rear offset MDB test conditions, the agency is proposing that the barrier be the same as the one shown in Figure 2 of Standard No. 214 and specified in 49 CFR Part 587, with one exception. The exception is that the face of the barrier would be positioned in the rear impact test so that it is 50 mm (2 inches) lower than the barrier face height specified in the current Figure 2 of Standard No. 214.[16]

10. With respect to side impact crashes that result in fire, this proposal to upgrade Standard No. 301 addresses vehicle-to-vehicle crashes. There are approximately two to eight times as many side collision fires (depending on vehicle type) when the object struck is another vehicle compared to a narrow object such as a pole. However, the side collision fire rate for cars, light trucks, and vans is highest when a narrow object is struck. Would it therefore be reasonable to consider a pole side impact test as part of a subsequent upgrading of Standard No. 301?

11. Should the agency amend Standard No. 301 to prohibit fuel leakage in any crash test under Standard No. 208?

## IV. Summary of Comments

NHTSA received comments to the NPRM from seven vehicle manufacturers (Subaru, DaimlerChrysler, Porsche, Volkswagen, Ford, Honda, and General Motors), two vehicle manufacturer associations (Alliance of Automobile Manufacturers[17] and National Truck Equipment Association), three engineering firms (American Automotive Design, Dynamic Safety, and Syson-Hille and Associates), a test laboratory (Transportation Research Center), the Insurance Institute for Highway Safety, and a consumer advocate group, Advocates for Highway and Auto Safety. Their comments are summarized below by issue.

### *A. Rear Impact Test Procedure Upgrade*

None of the commenters opposed the proposed rear impact test procedure upgrade.

The Alliance suggested that significant vehicle redesign will likely be required to meet the high speed rear crash requirements. Volkswagen (VW) stated that the rear end structure of small cars will need to be made stiffer, which could result in increased acceleration imposed on occupants in more common lower speed rear crashes. Honda commented that increased vehicle body and fuel tank deformation would occur, even on vehicles that pass the fuel leak requirements.

DaimlerChrysler (DC) stated its belief ''that the proposal is likely to require significant changes to vehicle structure and design, which are yet to be fully defined and realized.'' DC argued that the proposed upgrade is a ''major rulemaking effort which will present many challenges to the industry that may not yet be fully identified.''

DC also expressed concerns with using a MDB at the proposed impact speed (80 km/h). DC stated that in impacts between a MDB and a vehicle at 80 km/h, DC has observed complete crushing of the barrier face and ensuing contact with the rigid cart backer plate and contact between the cart uprights and the impacted vehicle. DC recommended that NHTSA reevaluate the proposed test procedure upgrade to determine if the anticipated benefits could be achieved with a lower impact speed (such as 56–64 km/h), or provide design changes to the MDB and cart system.

GM and Ford observed bottoming of the barrier face to the backing plate and contact between the barrier uprights and the vehicle in some rear impact crash tests. GM also stated that the barrier face can underride the struck vehicle and, upon rebound, the upright that contacted the vehicle can become ''caught'' on vehicle structure (*e.g.*, bumper, frame cross member, etc.), with undetermined effects on the struck vehicle. GM and Ford suggested that some changes to the MDB might be necessary. Ford recommended that the agency investigate ''rounding the corners of the deformable portion of the barrier and increasing its depth.'' Ford stated that its testing indicated that the right angle corners of the barrier face can ''hang up on trim,'' potentially affecting test repeatability.

Honda commented that it had conducted rear impact crash tests in accordance with the proposed test procedure. Honda noted that the MDB sometimes over-rode the rear of the test vehicle, and that in these instances, the rear frame structure of the vehicle could not absorb crash energy sufficiently to meet the fuel leaking requirements of Standard No. 301. Honda also noted, ''Even in instances when the rear frame functioned somewhat to absorb energy, the increased speed and the off-set impact caused extensive deformation of the fuel tank.'' Honda stated that a vehicle in compliance with the proposed upgrade would have to absorb twice as much energy as a vehicle in compliance with Standard No. 301 as currently written. Honda argued that under the proposed upgrade, significant changes would have to be made to each of its vehicle models.

VW noted that the proposed rear impact would be to either side of the vehicle. VW recommended that this be

[16] The question also noted that positioning the barrier face in that manner might make it necessary to slightly change the center of gravity and moment of inertia specifications. NHTSA's subsequent analysis indicated that there will be no measurable effect on the center of gravity and the moment of inertia of the MDB by lowering the face of the barrier two inches (NHTSA Docket No. NHTSA–008248–3, November 16, 2000).

[17] The members of the Alliance of Automobile Manufacturers are: BMW Group, DaimlerChrysler, Fiat, Ford Motor Company, General Motors, Isuzu, Mazda, Mitsubishi Motors, Nissan, Porsche, Toyota, Volkswagen, and Volvo.

changed so that the impact is on the side of the vehicle where the fuel filler pipe or filler neck is located. VW argued that impacting the side of the vehicle where the fuel filler pipe or filler neck is located would represent the worst case condition and establish a more objective requirement for enforcement purposes.

VW also commented that in order to assure compliance with the higher speed rear impact test, the vehicle rear end structure would have to be made stiffer, particularly in smaller cars. VW stated that this would tend to increase the potential for whiplash type injuries in lower speed crashes. VW recommended that NHTSA address this issue before issuing a final rule.

Ford commented that it has conducted voluntary, in-house 80 km/h vehicle-to-vehicle rear impact crash tests to evaluate fuel system integrity since the mid-1980s. Ford supported the agency's proposed test upgrade, stating, ''Ford believes this test can provide a robust evaluation of a fuel system's integrity.''

Syson-Hille commented that other vehicle manufacturers, such as GM, began conducting 80 km/h vehicle-to-vehicle rear impact crash tests in the 1980s, and that Mercedes-Benz marketing materials note that its vehicles have been designed to provide fuel system integrity in offset rear impact crashes since the early 1980s.

The Insurance Institute for Highway Safety (IIHS), Advocates for Highway and Auto Safety (Advocates), and American Automotive Design (AAD), urged NHTSA to require the use of a 4,000-pound rigid barrier, instead of the 3,015-pound MDB. IIHS and Advocates urged this based on their view that the Standard No. 214 barrier does not reflect the characteristics of pickup trucks and sport utility vehicles (SUV) and thus may not reproduce the patterns or extent of deformation seen when those types of vehicles strike cars in the side or rear.

*B. Side Impact Test Procedure Upgrade*

None of the commenters opposed the proposed side impact test procedure upgrade.

DC recommended that, as in the proposed rear impact test procedure, the agency specify that the MDB be lowered 50 mm (2 inches) in the proposed side impact test procedure. DC stated that data indicate that pre-impact braking occurs in 54 percent of side impacts.

*C. Door System Integrity*

Vehicle manufacturers generally opposed adding a post-crash test door operability requirement to Standard No. 206. The Alliance and GM agreed with and supported the logic regarding a post-crash test door operability requirement. However, the Alliance and GM stated that Standard No. 206 addresses component level performance, while a post-crash test door operability requirement would address vehicle level performance. The Alliance stated that adding such a requirement to Standard No. 206 would necessitate the addition of vehicle crash test requirements to the standard as well. The Alliance also stated,

> Prior to proposing such requirements in future rulemakings, NHTSA would need to develop and define an objective set of meaningful and measurable requirements pertaining to the applicability of doors (front rear, sliding, *etc.*), number of doors (per row, per vehicle, *etc.*), and methodology by which operability would be assessed (without the use of tools is an insufficient measure, as NHTSA has concluded in past rulemaking efforts).

GM stated that such a requirement would be more appropriate if it were added to crash tests that are already required for other safety standards, such as Standard No. 208, *Occupant crash protection,* Standard No. 214, *Side impact protection,* or Standard No. 301. GM noted that it currently performs door operability evaluations following most barrier tests.[18] GM argued that NHTSA should develop meaningful, appropriate, objective, and repeatable requirements for post-crash test door operability after further research and through separate rulemaking.

DC argued that NHTSA has not provided sufficient evidence to demonstrate the need for adding a post-crash test door operability requirement to Standard No. 206. DC recommended that NHTSA conduct research to determine such a requirement's real world benefits, feasibility, and effects on vehicle design, cost, and weight. DC suggested that if NHTSA persists in such a rulemaking, the agency require only one operable door per vehicle.

Advocates supported adding a post-crash test door operability requirement to Standard No. 206. Advocates stated:

> Advocates believes that ensuring that doors can be opened after crashes is not a safety problem involving only fire-related collisions. It is a major safety issue long overdue for agency regulatory attention. Many thousands of crashes every year result in vehicle deformation preventing door opening. In these crashes, numerous people are seriously injured whose lives could be saved or the severity of their injuries substantially reduced if rescue squads could quickly reach them without recourse either to the use of Jaws of Life or to being forced to extricate a seriously injured person through a window or windshield, a common practice.

Syson-Hille also supported a post-crash test door operability requirement. Syson-Hille recommended that the agency require at least one door on two-door vehicles and three doors on four-door vehicles to be operable after a crash test.

*D. Lead Time*

1. Rear Impact Test Upgrade

The vehicle manufacturers all supported the three-year lead time proposed in the NPRM for the rear impact test upgrade, but recommended that the agency add a phase-in after that period. The Alliance recommended a four-year phase-in with an implementation schedule of 25 percent compliance the first year, 40 percent the second year, 70 percent the third year, and 100 percent the fourth year. The Alliance also recommended that the agency grant carry forward credits for early compliance.

The Alliance argued that a phase-in is necessary because the Alliance considered this to be a ''major rulemaking, particularly in response to the substantially increased impact energy of the high speed rear offset impact testing proposed.'' The Alliance stated:

> Significant vehicle redesign and retooling for production will likely be required in a number of vehicles. The small number of tests conducted by the NHTSA, often with a sample size of one vehicle, simply is inadequate to identify whether vehicle changes are required or for any manufacturer to assure compliance for all its vehicles.

DC supported the Alliance's recommended phase-in schedule. DC argued that such a phase-in would ''allow the efficient phasing out of older models designed to the current requirements with replacements that are thoroughly designed, constructed and tested to meet the more stringent requirements without very costly and disruptive mid cycle manufacturing changes.''

Subaru recommended a three-year full phase-in, with complete compliance after the third year. Honda suggested a four-year phase-in with an implementation schedule of 10 percent, 30 percent, 70 percent, and 100 percent. Porsche supported the Alliance's recommended lead time but requested that the agency provide small volume manufacturers the option of coming into compliance at the 100 percent level in

[18] GM stated, ''These evaluations start by first actuating the door latch. Assuming the door unlatches a nominal force of approximately 100 pounds is applied to open the door using a hook-type dial gage. A measurement of how far the door could be opened is made and recorded.''

the third year of the phase-in with no requirements in the first two years.

IIHS stated that the proposed three-year lead time for the rear impact test upgrade should be sufficient.

2. Side Impact Test Upgrade

Vehicle manufacturers supported the one-year lead time proposed in the NPRM for the side impact test upgrade, but recommended that the agency add a phase-in after this lead time. The Alliance and Ford recommended a four-year phase-in with an implementation schedule of 25 percent compliance the first year, 40 percent the second year, 70 percent the third year, and 100 percent the fourth year. The Alliance also recommended that the agency grant carry forward credits for early compliance.

IIHS stated that the one-year lead time proposed by the agency in the NPRM should be sufficient.

*E. Costs and Benefits*

Honda commented that the agency's cost estimates were insufficient. Honda stated, ''The cost of managing all the accompanying issues is at least 10 times greater than NHTSA's cost estimation.'' Honda claimed that to meet the proposed rear impact test upgrade, ''It will be necessary to change the thickness of the vehicle's rear structure, which requires the modification of existing dies and manufacturing of new dies and parts.''

VW questioned the safety benefits of the proposed test upgrades. VW stated:

> The accident data base of the Medical University of Hanover in Germany indicates that in the universe of crashes with at least one injured occupant, only 0.58 percent resulted in after-crash fire and only 0.4 percent of the injuries in the data base were fire related. In the same sample of crashes, the whiplash injuries were reported in 11 percent of the cases. Although the vehicle fleet population in Germany is different from that in the U.S., Volkswagen submits that the statistics support the very low incidence of post-crash fires and fire related injuries.

*F. Additional Issues*

1. Real World Data

The agency asked in the NPRM whether there were any real-world data, other than the data that NHTSA had already analyzed, that may better describe the relationship between the risk of occupant injury due to fire and crash severity.

The Alliance, GM, DC, and Ford stated that there were no such data. The Alliance and GM commented that both the FARS and NASS files might need to be modified to more accurately define any remaining fire risk.

2. Head and Neck Injury Criteria

In the NPRM, the agency noted that in the various crash tests that were performed during the research for this rulemaking, the values of head and neck injury criteria measured by the two front seat dummies were much higher than acceptable thresholds. The agency asked what these high injury values indicate about the real world potential for trauma injury to vehicle occupants in rear impacts.

The Alliance stated that its members would need access to more details of NHTSA's test program in order to respond to this question.[19] However, the Alliance argued that the issue of occupant protection in rear impacts is outside the scope of this rulemaking. The Alliance recommended that the agency address this issue in the ongoing Standard No. 202, *Head restraints,* rulemaking or in a possible future upgrade of Standard No. 207, *Seating systems.* The Alliance also commented that more research is needed to provide an appropriate level of seating system performance dealing with the proposed rear impact test upgrade.

Syson-Hille commented that both GM and Mercedes-Benz have been using 50 mph vehicle-to-vehicle rear impact tests, with occupant survival space criteria, since the 1980s. Advocates suggested that the agency consider upgrading requirements for the entire seating system (seat, seat back, and head restraint) to provide improved occupant protection in the proposed Standard No. 301 rear impact test upgrade.

3. Seat Back Failure

In the NPRM, the agency asked how seat back failures influence injury potential in rear impacts. The agency also asked for data that would aid it in determining the need for improving seat back strength and the appropriate requirements for doing so.

The Alliance stated that without a definition of ''seat back failure'' it could not answer the question. However, the Alliance defined the optimal seat back strength as the balance between strength and flexibility to address both severe and minor impacts.

DC and Ford supported the Alliance's comments. DC commented that the issue of seat back strength is outside the scope of this rulemaking, and should be addressed in a possible future upgrade of Standard No. 207. Ford stated that seat back strength should be designed to enhance occupant safety in real-world crashes.

GM agreed with an upgrade of Standard No. 207 seat back strength requirements in the future. However, GM stated that this should be done in a separate rulemaking.

VW commented that a single optimal level of seat back strength is extremely difficult to define because of the range in impact severity (a function of impact speed and the impacting vehicle structure in real-world crash situations).

Advocates stated:

> Advocates thinks it would be difficult for the agency to justify instituting the proposed rear impact fuel integrity test without reforming Standard No. 207 to prevent seat back collapse while also ensuring much better head restraint protection against whiplash injuries. It is obvious that it is unacceptable to propose a new crash test in which the majority of seatbacks in the test vehicles collapse or occupants suffer severe whiplash injuries in seats which maintain their upright positions. * * * Advocates is concerned that, in the short term, manufacturers may simply increase seat back strength, especially rigidity, to prevent seat backs from collapsing in the new No. 301 rear impact test.

4. Use of 5th Percentile Female Dummies

In the NPRM, the agency asked whether it should require vehicles to meet the requirements of Standard No. 301 in tests with 5th percentile female dummies as well as with the currently-required 50th percentile male dummies.

The Alliance, DC, GM, VW, and Ford opposed requiring the use of 5th percentile female dummies in Standard No. 301 rear impact tests. The Alliance stated that different dummy sizes would only change the total impact weight of the tested vehicles and would have little or no effect on the performance of the fuel system. However, GM supported the voluntary use of instrumented test dummies for research to understand better the mechanics and magnitude of the potential for injury for various dummy sizes in different crash situations.

Advocates supported requiring the use of 5th percentile female dummies in the proposed rear impact test procedure. Advocates stated this would help prevent occupant injury due to ramp up of the seat back. In addition, Advocates suggested that the agency require use of the 95th percentile male dummy in Standard No. 301 rear impact tests to help prevent occupant injury due to seat back failure.

5. Test Vehicle Loading Conditions

In the NPRM, the agency proposed to eliminate the second sentence of

[19] The agency notes that it docketed a detailed list of all the rear impact crash test results discussed in the NPRM and other related dockets. See Docket No. NHTSA–99–5825–1, June 8, 1999.

S7.1.6(b) of Standard No. 301. That sentence reads:

> If the weight on any axle, when the vehicle is loaded to unloaded vehicle weight plus dummy weight, exceeds the axle's proportional share of the test weight, the remaining weight shall be placed so that the weight on that axle remains the same.

The Alliance, Ford, and VW opposed the elimination of that sentence. The Alliance stated:

> The 136 kg load specified for impact testing by FMVSS [Federal Motor Vehicle Safety Standard] 301 is relatively small for many trucks. Even with this load directly over the rear axle, the test axle loads will generally not be in the same proportions as the specified GAWRs [gross axle weight ratings] for a full-sized truck. The second sentence allows the manufacturer to conduct the test when the conditions specified in the first sentence cannot be met.

VW recommended that the agency incorporate the load distribution provisions of S7.1.6(b), which apply to multipurpose passenger vehicles, trucks, and buses, in S7.1.6(a), which applies to passenger cars. VW also suggested that the text of S7.1.6(a) and (b) be clarified to state that the weight placement and attachment must be out of the vehicle crush zone and done in a manner that does not interfere with vehicle crash deformation.

GM recommended that the agency revise the test vehicle loading conditions to read as follows:

> *Passenger cars.* A passenger car is loaded to its unloaded vehicle weight plus the weight of the necessary anthropomorphic test devices, plus its rated cargo and luggage capacity weight, secured in the luggage area.
>
> *Multipurpose passenger vehicles, trucks, and buses.* A multipurpose passenger vehicle, truck, or bus is loaded to its unloaded vehicle weight plus the weight of the necessary anthropomorphic test devices, plus 136 kilograms or its rated cargo and luggage capacity weight, whichever is less, secured in the load carrying area and distributed as nearly as possible in proportion to its gross axle weight ratings. For the purposes of this standard, unloaded vehicle weight does not include the weight of work-performing accessories.

GM also recommended that the agency replace the language in S8.1.1 of Standard No. 208, S6.1 of Standard No. 212, S7.7 of Standard No. 219, S7.1.6 of Standard No. 301, S7.1.6 of Standard No. 303, and S7.2.3 of Standard No. 305 with the same language as that quoted above.[20] GM stated that these changes would facilitate common understanding, eliminate any ambiguity that might be due to any differences in the language of these standards, parallel the wording of the test procedure, and agree with the agency's intent for the loading conditions to be consistent.

6. Lowering the Barrier Face

In the NPRM, the agency proposed that the MDB that would be used in the proposed rear impact test procedure upgrade be the same as the one shown in Figure 2 of Standard No. 214, except that the barrier face would be 50 mm (2 inches) lower. The agency requested comments on this proposed change.

DC, GM, and Ford supported the proposed lowering of the barrier face for rear impact testing. The Alliance and VW, however, questioned NHTSA's proposal to lower the barrier face for the rear impact testing. VW commented that the statistics used by NHTSA to justify the proposed change had not been verified. VW also stated,

> The speed distribution of rear end crashes in which pre-impact braking might occur has not been fully addressed and it is possible that pre-impact braking of either the target vehicle or the impacting vehicle or both is not as common as NHTSA assumes in the high speed rear impact crashes that the very severe upgraded rear crash test is intended to address.

7. Pole Side Impact Test

In the NPRM, the agency noted that the side collision fire rate for passenger cars, light trucks, and vans is highest when a narrow object is struck. Thus, the agency asked whether it would be reasonable to consider a pole side impact test as part of a subsequent upgrading of Standard No. 301.

The Alliance, DC, GM, Ford, and Porsche opposed a pole side impact test. The Alliance stated that NHTSA would need to provide a full assessment of the safety basis if the agency undertook such a rulemaking. The Alliance also stated that the agency would need to propose a detailed test procedure, including pole contact locations, closing velocities, pole sizes, and modes of testing.

DC commented that any potential benefits of a pole side impact test ''would be far outweighed by the added counter measures that such testing would require.'' DC stated:

> We believe that the benefits to real world safety and the scope and magnitude, and impact on motor vehicle design of such requirements would need to be verified through detailed studies, testing, and be evaluated by the agency prior to consideration of such potentially invasive regulation with apparent major impact on motor vehicles. We believe that such studies would not demonstrate an appreciable benefit in overall real world occupant safety.

Advocates supported adding a pole side impact test to Standard No. 301. Advocates stated,

> Such a test would provide concurrent safety information on both upper and lower interior occupant protection (because of severe side structure deformation and localized intrusion), door integrity both during and after the crash, and of fuel system integrity.

8. Prohibiting Fuel Leakage in Frontal Impact Crash Tests

In the NPRM, the agency asked whether it should amend Standard No. 301 to prohibit fuel leakage in any crash test performed under Standard No. 208.

The Alliance and GM supported a future revision limiting fuel system leakage in any Standard No. 208 crash test to current Standard No. 301 requirements, if a meaningful safety benefit could be determined.

DC and Ford opposed a fuel leakage requirement in Standard No. 208 crash tests.

Advocates commented that the rates of fuel release and quantities currently permitted by Standard No. 301 are not consonant with fire prevention and occupant safety following a crash. Advocates recommended that the agency should show the real-world consequences of the rates and amounts of fuel spillage permitted by Standard No. 301, and, if the amounts are judged to be too lenient, revise them to minimize the chances of a post-crash fire.

IIHS and Dynamic Safety recommended that the agency adopt frontal offset crash test requirements in Standard No. 301. IIHS stated, ''Frontal offset deformable barrier crash tests create deformation patterns commonly found in severe real-world crashes. The offset loading challenges the vehicle's ability to retain its structural integrity.''

9. Compliance Responsibility of Second-Stage Manufacturers

In the NPRM, the agency noted that there are a large number of second-stage manufacturers that could be affected by the proposed rule. Second-stage manufacturers buy a chassis from a first-stage manufacturer and finish it to the consumer's specifications. The manufacturers that put a work-related body on a pickup truck chassis (such as a small tow truck) often perform manufacturing operations affecting the fuel system, both in the structure around the fuel tank and where the fuel filler neck attaches to the body. Other second-stage manufacturers use a van chassis or an incomplete vehicle for ambulances, small mobile homes, small school buses, *etc.*

[20] GM recommended that the following sentence be included in the language for Standard Nos. 208, 212, and 219: ''Vehicles are tested to a maximum unloaded vehicle weight of 2,495 kilograms.''

Typically, the first-stage manufacturer provides the second-stage manufacturer with a body builder's guide that tells the second-stage manufacturer what additions or other modifications it can make and still either pass along the original equipment manufacturer's certification for compliance with Standard No. 301 (for chassis cabs) or otherwise be confident that the vehicle will comply (for other types of incomplete vehicles). To the extent that a second-stage manufacturer deviates from the guide, it would have to certify compliance on its own.

In the NPRM, the agency tentatively concluded that few final stage manufacturers would deviate from the body builder's guide.

The National Truck Equipment Association (NTEA) [21] disagreed with this tentative conclusion. The NTEA commented:

> It is not inconceivable that a major upgrade of the standard could force a chassis manufacturer to forbid the completion of certain chassis with certain body types or equipment in order to reduce their liability to an acceptable level. In any event, it will be impossible for the chassis manufacturers to test or even envision all types of multi-stage vehicles and will likely allow no modifications of any sort while leaving as much liability with the final stage manufacturer as possible, even when no fuel system modifications are made by the final stage manufacturer.

The NTEA stated that the proposed upgrade of Standard No. 301 could require second-stage manufacturers to conduct compliance testing, and that since most second-stage manufacturers are small businesses, such testing would be an unreasonable burden.[22]

10. Fuel Siphoning

Dynamic Safety, IIHS, and Advocates all raised the issue of fuel siphoning after a fuel line is breached. Dynamic Safety stated:

> Any fuel system integrity standard upgrade should address the issue of fuel line siphoning. The standard should require that vehicles not siphon fuel if a fuel line is breached.

Dynamic Safety commented that anti-siphon devices are readily available. Dynamic Safety stated that Ford and DC have been using fuel return line one-way check valves (known as ''duckbill valves'') on many of their vehicles since the 1980s, and that GM has installed ''siphon break'' holes in some of its passenger car fuel return lines since the late 1980s.

IIHS stated, ''The Institute strongly supports implementation of requirements designed to stop the flow of fuel after a collision.'' Advocates strongly supported research into and consideration of fuel system flow interdiction through the use of various technologies, such as electric current shut-off devices that stop fuel pump delivery after a crash and manual or electrical inertia switches and check valves to block fuel delivery.

## V. Final Rule

### *A. Summary of the Final Rule*

The amendments in this final rule are essentially the same as those proposed in the NPRM, but with compliance requirements for the rear impact upgrade to be phased-in. Instead of providing that all vehicles must comply at the end of a several year period, as proposed in the NPRM, the agency is providing that compliance with the rear impact upgrade will be phased-in over an additional three-year period, without credits for early compliance. The lead time for the side impact upgrade is the same as proposed.

As proposed in the NPRM, the final rule establishes a rear impact test procedure that specifies striking the rear of the test vehicle at 80 ± 1 km/h (50 mph) with a 1,368 kilogram (3,015 pound) MDB at a 70 percent overlap with the test vehicle. The MDB is located 50 millimeters (2 inches) lower than the face of the Standard No. 214 barrier to simulate pre-crash braking. This replaces the 48 km/h rear moving barrier crash test previously required under S6.2 of Standard No. 301.

Also as proposed, the final rule eliminates Standard No. 301's side crash test and replaces it with the side impact crash test currently specified in Standard No. 214. S6.3 of Standard No. 301 had required a vehicle's side to be impacted by a barrier moving at 48 km/h. This final rule incorporates into S6.3 the side impact crash test in Standard No. 214, which is also amended by the final rule to specify that a stationary vehicle be struck on either side by a 1,368 kg (3,015 pound) MDB moving at a speed of 53 ± 1km/h.

NHTSA notes that while it has conducted research to explore the desirability of revising the Standard No. 214 barrier, additional research would have to be conducted before the agency could decide whether proposing a revision might be worthwhile. Thus, even if a revision were ultimately adopted, it could not be implemented until well beyond the implementation of this upgrade to Standard No. 301.

Instead of providing that all vehicles comply at the end of a several year period, as proposed in the NPRM, the agency is providing that compliance with the rear impact upgrade will be phased in by increasing percentages of production over an additional three-year period, without credits for early compliance or compliance above the required percentages.

At least 40 percent of vehicles manufactured on or after September 1, 2006, but before September 1, 2007, must comply with the new rear impact requirements. At least 70 percent of the vehicles manufactured on or after September 1, 2007, but before September 1, 2008, will have to comply, and starting September 1, 2008, all vehicles manufactured will have to comply with the upgraded rear impact requirements. The final rule amends 49 CFR Part 586, establishing reporting and record keeping requirements concerning the phase-in. However, vehicles manufactured in two or more stages will not be required to meet the rear impact upgrade requirements until September 1, 2008, when all vehicles must be certified as complying.

All vehicles manufactured on or after September 1, 2004, must comply with the upgraded side impact requirements.

### *B. Rear Impact Test Procedure*

After reviewing real-world fire-related crash data, various vehicle offset crash tests, and the comments, NHTSA is adopting the rear impact test procedure as proposed. The final rule replaces Standard No. 301's current rear impact test procedure with one that specifies striking the rear of the test vehicle at 80 ± 1 km/h (50 mph) with a 1,368 kilogram (3,015 pound) MDB at a 70 percent overlap with either side of the test vehicle. The MDB face is located 50 millimeters (2 inches) lower than the face of the Standard No. 214 barrier to simulate pre-crash braking.

The agency is not adopting DC's recommended impact speed of 56–64 km/h for the reasons stated in the NPRM. Namely, the agency believes that the upgraded test procedure will simulate a type of rear vehicle-to-vehicle collision that can result in post-crash fire in an otherwise survivable crash: a high speed offset rear strike to the vehicle that results in fuel leakage from a breach in the fuel system and, potentially, a rapidly spreading fire that results in fatalities and injuries. As NHTSA noted in the NPRM, NASS estimates show that the majority of fatal and nonfatal occupant burn injuries in rear impact crashes were in the 34 to 48

[21] The NTEA represents second-stage manufacturers, most of whom are small businesses.

[22] The NTEA submitted several conformity statements from first-stage manufacturers as evidence that the certification responsibilities of second-stage manufacturers would change as a result of this rulemaking.

km/h (21 to 30 mph) delta-v range. The agency believes that the offset rear impact test procedure specified in this final rule will simulate vehicle-to-vehicle crashes with a delta-v range of 32 to 48 km/h (20 to 30 mph).

The agency is also not adopting the recommendations of DC, GM, and Ford to specify design changes to the MDB and cart system. DC, GM, and Ford commented that, in their rear impact testing under the proposed test procedure, the MDB honeycomb appeared to bottom out. NHTSA, in the rear impact testing that it conducted in support of this rulemaking, took detailed post-crash test honeycomb crush measurements. None of the measurements indicated complete bottoming out of the honeycomb, and only a few of the measurements indicated about 85 percent compression.

Honeycomb, by design, is limited to approximately 85 percent compression, at which point it begins to stiffen considerably until it becomes infinitely stiff at 90–95 percent compression. During the 85–90 percent compression phase, it is similar to vehicle structures that become progressively stiffer as the crush in a crash increases. The measurements that were at 85 percent compression were observed near the edges of the MDB face, and since the total area was miniscule compared to the overall block of honeycomb, there will be little or no effect on the total or local forces exerted. Therefore, the energy absorbing honeycomb element has fully served its function of spreading the loads to the soft and hard structures of the vehicle and dissipating its share of the crash energy by the time that nearly full compression occurs. Accordingly, the agency believes that bottoming out of the honeycomb is not a concern.

DC, GM, and Ford also commented that, in their rear impact testing, the uprights supporting the cart face inadvertently contacted the struck vehicle. None of the commenters provided details on specific tests. However, the agency observed such contact in several of its rear impact tests. The NHTSA tests were conducted with the Standard No. 214 barrier, which has uprights that extend approximately 100 mm (4 inches) above the backing plate. The agency conducted film analysis of its tests and found there was no contact between the uprights and any significant vehicle structural components. The only vehicle components that contacted the uprights were trunks or tailgates that were already deformed. These contacts came late in the crash event and did not influence the outcomes.

The agency also notes that GM conducted several rear impact crash tests with a non-Standard No. 214 barrier. The cart used by GM had uprights extending approximately 600 mm (24 inches) above the backing plate, or 20 inches taller than the uprights on the barrier used by NHTSA. Despite this significant difference, there was no difference in the GM and NHTSA test results. Accordingly, the agency believes that contact between the cart uprights and the struck vehicle is not a concern.

GM noted that in some of its tests the barrier face underrode the struck vehicle and, upon rebound, the upright that contacted the vehicle became ''caught'' on vehicle structure (*e.g.*, bumper, frame cross member, *etc.*), with undetermined effects on the struck vehicle. Ford stated that, in some of its tests, right angle corners of the barrier face hung up on vehicle trim, potentially affecting test repeatability.

NHTSA did not observe either of these phenomena in any of its testing. The agency notes that the top edge of the deformable element of the barrier is 31 inches above the ground. Consequently, for the barrier face to underride the struck vehicle, the rear end of the vehicle would have to be lifted approximately 20 to 24 inches off the ground. The agency believes that such lifting is highly unlikely. Moreover, the agency believes that any possible effects from the phenomena observed by GM and Ford would be secondary since they occur after the maximum crush damage of the test. The agency notes that damage to the fuel systems tested by NHTSA and GM appeared to result from crush damage rather than from any secondary damage. Accordingly, the agency believes that the points raised by GM and Ford are not of concern.

NHTSA is not adopting VW's suggestion to not lower the barrier face by 50 mm (2 inches) to simulate pre-crash braking. NHTSA has determined that this change will have no measurable effect on the performance of the barrier.[23] The agency's tests indicate that the center of gravity of the barrier will drop about 7.4 mm (0.29 inches), which is well within the 25.4 mm (1 inch) allowed tolerance for center of gravity locations. The moment of inertia of the barrier about the longitudinal (roll) and transverse (pitch) axes will be reduced 0.1 percent and 0.02 percent, respectively, and there will be no change in the vertical (yaw) axis. The agency notes that the device currently used to measure these parameters is not capable of measuring such small changes in the moment of inertia. Moreover, these small changes will not produce any measurable effect on the test results.

The agency is not adopting the recommendation of Advocates, IIHS, and AAD to specify the use of a heavier (4,000 pound) barrier because, as the agency noted in the NPRM, in an 80 km/h (50 mph) rear impact offset crash test, a 3,015-pound barrier effectively reproduces the damage profile seen in real world crashes that most often lead to fires. If a heavier barrier were used, the proposed rear impact crash test would no longer reproduce that profile. In addition, the agency has conducted its crash tests in support of this rulemaking with a 3,015-pound barrier. The agency would have to conduct further research and development before a heavier barrier could be proposed for use in any test procedure.[24]

Honda claimed that the MDB overrode the rear of the test vehicle but was not specific about the vehicle test in which the override occurred. We presume that Honda may have examined the test film of a Honda Accord test conducted by GM under the GM C/K settlement agreement with NHTSA. While NHTSA personnel made suggestions and witnessed the testing, we did not have direct control over the conduct of the tests. The Standard No. 301 upgrade test protocol was not precisely followed, but was instead modified according to what GM believed to be a worst case. Two major exceptions to the Standard No. 301 upgrade protocol were the test speed and the barrier height. GM believed that testing near the Standard No. 214 height and at 85 km/h would provide a worst case scenario. In GM's test with the Honda Accord, there was indeed severe override, which we believe was due to the additional 2.5 inches in the height of the MDB face, and to a lesser degree the additional speed of the test.

VW also recommended that the proposed rear impact test be on the side of the vehicle where the filler pipe is located. Our test results indicated that fuel leakage is not dependent on the location of the filler pipe; rather, it is dependent on how the overall fuel system is protected against the impact. Therefore, we are not incorporating

[23] The agency has docketed its findings on which this determination is based. See Docket No. NHTSA–00–8248, entry 3.

[24] The agency notes that the impact with the 3,015-pound barrier at 50 mph produces an impact energy 2.09 times greater than the impact energy produced by the current Standard No. 301 test. If the agency specified the use of a 4,000-pound barrier at 50 mph, the impact energy would be 2.78 times greater than the current Standard No. 301 test.

VW's suggestion and vehicles must comply when the rear impact test is conducted on either side of the vehicle.

Further, our cost study indicated that compliance with this final rule will not require major structural redesign (as stated by Alliance and DC), or necessitate an increase in vehicle stiffness (as stated by VW). Because there is no need to increase the vehicle stiffness, this final rule does not increase the potential for whiplash injuries in lower crashes as suggested by VW.

*C. Side Impact Test Procedure*

The agency is replacing Standard No. 301's current lateral crash test with the side impact crash test specified in Standard No. 214. The Standard No. 214 side impact crash test specifies that a stationary vehicle be struck on either side by a 1,368 kg (3,015 pound) MDB. As noted above, Standard No. 214 currently specifies an impact speed of 54 km/h. In order to provide an appropriate tolerance without affecting the stringency of the test, the agency proposed to change the test speed to 53 ± 1 km/h and adopt it for Standard No. 301. No comments addressed this issue, and we are adopting that proposal.

The agency is specifying that the MDB be lowered 50 mm (2 inches) for the rear impact test to simulate pre-braking. However, the agency is not specifying that the MDB be lowered for the side impact test. The test conditions of Standard No. 214 were intended to reflect a ''worst case'' scenario for occupants riding in the struck vehicle in that the striking vehicle was assumed not to be braking prior to impact. A braking vehicle would strike lower than a non-striking vehicle, potentially engaging more of the side sill of the struck vehicle. Full engagement of the sill dissipates the crush energy more effectively than engagement of the door structures located above the sill, resulting in les intrusion and deformation along the struck side where fuel system components (*e.g.*, fuller filler neck and tube) are located. NHTSA believes the integrity of those fuel system components would be tested in a more severe environment if the barrier were not lowered. For these reasons, NHTSA has decided not to lower the MDB for the side impact test.

*D. Door System Integrity*

NHTSA believes that a post-crash door operability requirement could be a practicable, reasonable safety enhancement. However, the agency has decided not to add a post-crash door operability requirement to Standard No. 301 or Standard No. 206 in this rulemaking. The agency has not developed a practical, objective, and repeatable test procedure for testing door operability. The agency is specifically concerned with developing specifications for the type and magnitude of force needed to test door operability. The agency notes that none of the commenters who supported a door operability requirement suggested a test procedure.

Accordingly, NHTSA will need to conduct research before proposing any post-crash door operability requirement and will consider adding a post-crash door operability requirement to Standard No. 206 or Standard No. 301 in a separate rulemaking.

*E. Lead Time*

1. Rear Impact Test Upgrade

In the Preliminary Regulatory Evaluation for the NPRM, the agency said that most vehicles needing modification to meet the upgrade rear impact test would need only minor modifications and estimated that those modifications could be completed in 33 months. Based on that estimate, we provided a lead time of three years.

The Alliance said ''significant vehicle redesign and retooling for production will likely be required in a number of vehicles.'' It suggested ''(t)he small number of tests conducted by the NHTSA, often with a sample size of one vehicle, simply is inadequate to identify whether vehicle changes are required or for any manufacturer to assure compliance for all its vehicles.'' The Alliance suggested that the agency phase in the requirements, beginning not earlier than three years after the issuance of the final rule, according to the following annually increasing percentages of production: 25%, 40%, 70% and 100%.

In their comments on the NPRM, DC and Honda argued that some vehicles would need more than just minor modifications and that therefore additional lead time should be provided. Both suggested that the entire rear ends of some vehicles would have to be redesigned, although neither identified any specific models in need of such changes. Honda generally cited crash testing in support of its argument, but gave no details about that testing. DC suggested the same phase-in recommended by the Alliance. Honda suggested that the agency phase in the requirements, beginning not earlier than three years after the issuance of the final rule, according to the following percentages of production: 10%, 30%, 70% and 100%.

While the agency continues to believe that a three-year lead time is sufficient for most vehicles in need of modification, it agrees that it is desirable to provide additional lead time to accommodate any new models that were designed and developed based upon the current requirements. The agency recognizes that vehicle platforms, once developed, are typically used for a number of years without major structural modification. We also recognize that in order to meet the requirements of FMVSS No. 301, a vehicle, without modification, must meet the static roll over requirements following an impact in a barrier test. Consequently, we have decided that the upgraded rear impact test will be phased-in, beginning on September 1, 2006, according to the following percentages of production: 40%, 70% and 100%. We believe that this combination of lead time and phase-in will allow sufficient time for existing platforms to be redesigned to comply with all of the requirements of FMVSS No. 301, and that the four year phase-in proposed by the Alliance is not necessary.

We also believe that it is not necessary to allow an optional ''0%, 0%, 100%'' three-year phase-in for limited-line manufacturers as proposed by Porsche. A similar phase-in exception for limited line manufacturers is present for the advanced air bag requirements of Standard No. 208. However, the advanced technology requirements that compounded the disparity between the phase-in requirements of the Advanced Air Bag Rule for limited line manufacturers and more diverse manufacturers is not present here.

2. Side Impact Test Upgrade

In the Preliminary Regulatory Evaluation for the NPRM, we said:

> Since almost all vehicles pass the Standard No. 214 test without fuel leakage and all manufacturers have done these tests on their passenger cars and light trucks and vans up to 6,000 pounds GVWR, the agency is proposing a one year leadtime after the final rule for implementing the Standard No. 214 test requirement for the lateral test.

Some vehicle manufacturers supported the one-year lead time proposed in the NPRM for the side impact test upgrade, but recommended that the agency add a phase-in after this lead time. The Alliance asked for additional lead time for vehicles not previously subject to Standard No. 214, saying;

> Until a complete and thorough evaluation program is completed for each model, the actual and exact extent of changes to each

vehicle cannot be ascertained. For this reason, we recommend that vehicles not previously subject to FMVSS 214 requirements also have the same three-year lead time and four year phase-in schedule as proposed above for the rear impact requirement, with the allowance for early compliance. Starting the lead time and the phase-in for both the rear and side impact requirements at the same time would also be logical and provide clarity since both are contained in the single notice.

As we note below in the section on costs, only one out of more than 100 vehicles tested failed Standard No. 301's fuel leakage requirements using Standard No. 214's side impact test. Based on those test results, the agency believes that few vehicles, approximately 1%, will have to be modified to meet Standard No. 301's leakage requirements using Standard No. 214's side impact test. Therefore, the one-year lead time without a phase-in is adopted, as was proposed.

*F. Benefits*

The target population of crashes includes multi-vehicle crashes in which a passenger vehicle is struck in the rear by another passenger vehicle and the fire starts in the struck vehicle. There are an estimated 58 burn-related fatalities and 119 non-fatal burn-related injuries annually in the target population. The non-fatal burn injuries in that population of crashes were mostly minor and were typically not the most severe injury to the occupant. The agency estimates that approximately 8 to 21 fatalities will be prevented once all vehicles on the road comply with the upgraded rear impact test. The cost per life saved is estimated to be $1.96 million to $5.13 million ($41 million/21 lives to $41 million/8 lives). The agency is not estimating the number of reduced non-fatal burn-related injuries because there are only a few cases each year in which the injured person's most serious injury was a burn injury.

There are fewer than 100 fatalities annually in multi-vehicle side impacts that result in fire. The agency believes that the Standard No. 214 side impact test is somewhat stricter than the existing lateral impact test in Standard No. 301. However, the agency was unable to quantify any benefits from switching to the Standard No. 214 side impact test.

NHTSA disagrees with the VW comment that the benefits of this rulemaking are too low compared to its costs. VW did not provide any data to support their comment. However, the agency believes that VW's cost estimates may be based on costs of issues, such as post-crash door operability, seat back failures, and dummy responses, which were discussed in the NPRM but not adopted in this final rule.

*G. Costs*

The agency estimates that the average cost for vehicles that will need to be modified to comply with the upgraded rear impact test is $5.31 per vehicle.[25] Based on its belief that the test failures in the agency's testing were more the result of design differences than vehicle weight differences, the agency estimates that 46 percent of the vehicle fleet does not currently meet the upgraded rear impact test. It further estimates that approximately 16.7 million vehicles are sold each year in the U.S. Together, this information indicates that the total cost for the fleet will be approximately $41 million per year.

Using the Standard No. 214 side impact test as the Standard No. 301 side impact test will eliminate the cost of conducting a unique Standard No. 301 test as well as the cost of an extra test vehicle. Since the average current Standard No. 301 side impact test is roughly $4,300 and the average test vehicle costs about $21,000, the total savings would be about $25,200 per vehicle model.[26]

Only one out of more than 100 vehicles tested failed Standard No. 301's fuel leakage requirements using Standard No. 214's side impact test. Based on those test results, the agency believes that few vehicles will have to be modified to meet Standard No. 301's side impact leakage requirements using Standard No. 214's side impact test.

NHTSA disagrees with the Honda comment that the agency's cost estimates are too low. The agency's cost estimates are based on the changes that will be needed to remedy those noncompliant vehicles needing only minor modifications. Since most vehicles readily pass the fuel leakage requirements using the Standard No. 214 side impact test, we do not believe modifications will be required which are not minor. Neither Honda nor any of the other vehicle manufacturers provided data indicating that the costs of modifying vehicles to comply will be greater than the agency's estimates.[27] Furthermore, 54 percent of the vehicles tested were able to pass at the higher test speed and the measures required to address the failing vehicles do not involve structural changes.

*H. Additional Issues*

1. Real World Data

None of the commenters provided any real-world data on the relationship between crash severity and the risk of occupant injury due to fire. Thus, as discussed above in the section on Costs and Benefits, it appears that the data files NHTSA used in developing the NPRM are the best available data sources.

2. Head and Neck Injury Criteria

The agency agrees with the Alliance's comment that the issue of occupant protection would best be discussed in the context of a rulemaking focused on that issue. The agency notes that it is in the process of developing a final rule for Standard No. 202 and a proposed rule for Standard No. 207, and will address rear impact protection in those rulemakings.

3. Seat Back Failure

NHTSA agrees with the DC comment that the issue of seat back failure best be discussed in the context of a rulemaking focused on that issue. The agency notes that it is considering an upgrade of Standard No. 207, where this issue will be addressed.

4. Use of 5th Percentile Female Dummies

NHTSA agrees with the GM comment that using various dummy sizes to study the safety consequences to vehicle occupants due to the rear impact test upgrade should be a subject for future research. The agency will address the use of various dummy sizes in rear impact tests in separate rulemakings.

5. Test Vehicle Loading Conditions

The agency is adopting GM's suggested revision of S7.1.6(b) of Standard No. 301. That paragraph is revised to read as follows:

S7.1.6(b) Except as specified in S7.1.1, a multipurpose passenger vehicle, truck, or bus with a GVWR of 4,536 kg or less is loaded to its unloaded vehicle weight, plus the necessary test dummies as specified in S6, plus 136 kg or its rated cargo and luggage capacity weight, whichever is less, secured in the load carrying area and distributed as nearly as possible in proportion to its GAWR. For the purpose of this standard, unloaded vehicle weight does not include the weight of work-performing accessories. Each dummy is restrained only by means that are installed in the vehicle for protection at its seating position.

This provision is revised to simplify the language and provide clearer

[25] This is a $0.31 increase from the figure used in the NPRM.

[26] The figures in the NPRM were $4,000 for the average lateral test for Standard No. 301 costs, $20,000 for average test vehicle cost, and a total of about $24,000 per vehicle model.

[27] The agency believes that Honda's cost estimates are overstated since they include vehicle models that complied with the amendments in this final rule when the agency tested them.

instruction as to how weight is to be distributed on a vehicle under test conditions. NHTSA is not adopting Alliance's recommendation to retain the language that addressed distribution when the axle's proportional share is exceeded. While the revised provision eliminates that language, it does provide that weight is to be distributed as *nearly as possible* in proportion to the GAWR.

NHTSA is not adopting GM's recommendation that the agency replace the language in S8.1.1 of Standard No. 208, S6.1 of Standard No. 212, S7.7 of Standard No. 219, S7.1.6 of Standard No. 301, S7.1.6 of Standard No. 303, and S7.2.3 of Standard No. 305 with identical language. The agency believes that such revisions are outside the scope of this rulemaking. However, the agency will treat GM's recommendation as a petition for rulemaking and will make a decision on whether or not to grant the petition within the next 120 days.

NHTSA is also not adopting GM's and VW's suggested revision of S7.1.6(a). The agency believes that the language in that paragraph is sufficiently clear.

6. Lowering the Barrier Face

For the reasons discussed above in the section on Rear Impact Test Procedure, the agency is specifying that the barrier face in the rear impact test procedure is lowered 50 mm (2 inches).

7. Pole Side Impact Test

NHTSA agrees with the comments from the Alliance, GM, DC, Porsche, and Ford that the agency must assess the safety basis for a pole side impact test, as well as develop an objective, repeatable test procedure, including pole contact locations, closing velocities, pole sizes, and modes of testing, before the agency proposes such a test. Any future proposals to utilize a pole side impact test will address these issues.

8. Prohibiting Fuel Leakage in Frontal Impact Crash Tests

NHTSA agrees with the comments from the Alliance and GM that the agency should consider a future revision limiting fuel system leakage in any Standard No. 208 crash test to the levels currently specified in Standard No. 301. In frontal impacts at 35 mph (56 km/hr) into the barrier, there have been 10 failures out of 406 NCAP (New Car Assessment Program) tests, since 1979. While rare, the agency will continue to monitor fuel system leakage in the NCAP tests to determine whether future upgrades would be appropriate.

9. Compliance Responsibility of Second-Stage Manufacturers

NHTSA believes that there will be no change to the certification responsibilities of second-stage and final-stage manufacturers as a result of this rulemaking. The agency has reviewed the conformity statements from first-stage manufacturers submitted by the NTEA and believes them to be reasonable. Under these conformity statements, the first-stage manufacturer installs the entire fuel system, and the second-stage or final-stage manufacturer can make minor alterations without violating the pass-through certification from the first-stage manufacturer.[28] Further, vehicles manufactured in two or more stages will not be required to comply with the rear impact upgrade until the final stage of the phase-in.

In cases in which the second-stage or final-stage manufacturers make significant changes to the fuel system, they may not be able to use the pass-through certification, and may have to certify that the vehicle complies with Standard No. 301. If it is not economically feasible for these manufacturers to perform the compliance testing or engineering analysis, the manufacturers may apply for a temporary exemption under 49 CFR Part 555.

The agency also notes that it is currently involved in a negotiated rulemaking process with the NTEA, first-stage manufacturers, and other stakeholders regarding the certification process for vehicles manufactured in two or more stages. The agency intends to develop changes to the regulations governing the certification of such vehicles through this process.

10. Fuel Siphoning

The issues raised by Dynamic Safety concerning fuel siphoning and by IIHS and Advocates concerning fuel cutoff devices all pertain to frontal fire protection. NHTSA research identified rear impacts as the most common type of crashes that result in fires. The agency would need to conduct research to determine the extent of the problem related to fuel siphoning as described by Dynamic Safety. If future NHTSA analysis of real-world crash data indicates that there is a safety problem that warrants further regulatory action, the agency will consider additional changes to Standard No. 301. The agency notes that preliminary research of frontal impacts under the GM settlement agreement indicated that the vehicles equipped with fuel cutoff devices performed similarly to vehicles without such devices. Consequently, the agency does not anticipate that any real world benefits would result if the agency required fuel cutoff devices.

## VI. Rulemaking Analyses and Notices

### *A. Executive Order 12866 and DOT Regulatory Policies and Procedures*

Executive Order 12866, ''Regulatory Planning and Review'' (58 FR 51735, October 4, 1993), provides for making determinations whether a regulatory action is ''significant'' and therefore subject to OMB review and to the requirements of the Executive Order. The Order defines a ''significant regulatory action'' as one that is likely to result in a rule that may:

(1) Have an annual effect on the economy of $100 million or more or adversely affect in a material way the economy, a sector of the economy, productivity, competition, jobs, the environment, public health or safety, or State, local, or tribal governments or communities;

(2) Create a serious inconsistency or otherwise interfere with an action taken or planned by another agency;

(3) Materially alter the budgetary impact of entitlements, grants, user fees, or loan programs or the rights and obligations of recipients thereof; or

(4) Raise novel legal or policy issues arising out of legal mandates, the President's priorities, or the principles set forth in the Executive Order.

NHTSA has considered the impact of this final rule under E.O. 12866 and the Department of Transportation's regulatory policies and procedures and has determined that it is not significant.

NHTSA has prepared a Final Regulatory Evaluation (FRE) describing the economic and other effects of this final rule.[29] If only minor modifications are needed to comply with the upgraded rear impact test, the agency estimates that the average cost for vehicles that will need to be modified is $5.31 per vehicle. The agency estimates that 46 percent of the vehicle fleet does not currently meet the upgraded rear impact test and that approximately 16.7 million vehicles are sold each year in the U.S. Together, this information indicates that the total cost for the fleet will be approximately $41 million per year. To the extent that any vehicles need more than minor modifications, the total cost may be higher. However, none of the

[28] The first-stage manufacturer typically certifies that the incomplete vehicle meets the requirements of Standard No. 301. This relieves second-stage or final-stage manufacturers of the burden of conducting Standard No. 301 compliance tests, unless those manufacturers make substantial changes to the fuel system.

[29] A copy of the FRE has been placed in the docket.

commenters provided data indicating that the cost of remedying noncompliant vehicles will be greater than the agency's estimates. Using the Standard No. 214 side impact test as the Standard No. 301 side impact test will eliminate the cost of conducting a unique Standard No. 301 test as well as the cost of an extra test vehicle. The total savings would be about $25,200 per vehicle model.

*B. Regulatory Flexibility Act*

Pursuant to the Regulatory Flexibility Act (5 U.S.C. 601 *et seq.*, as amended by the Small Business Regulatory Enforcement Fairness Act (SBREFA) of 1996), whenever an agency is required to publish a notice of rulemaking for any proposed or final rule, it must prepare and make available for public comment a regulatory flexibility analysis that describes the effect of the rule on small entities (*i.e.*, small businesses, small organizations, and small governmental jurisdictions). The Small Business Administration's regulations at 13 CFR part 121 define a small business, in part, as a business entity ''which operates primarily within the United States.'' (13 CFR 121.105(a)). No regulatory flexibility analysis is required if the head of an agency certifies the rule will not have a significant economic impact on a substantial number of small entities. SBREFA amended the Regulatory Flexibility Act to require Federal agencies to provide a statement of the factual basis for certifying that a rule will not have a significant economic impact on a substantial number of small entities.

NHTSA has considered the effects of this final rule under the Regulatory Flexibility Act. I certify that this final rule will not have a significant economic impact on a substantial number of small entities. The rationale for this certification is that the amendments made in this final rule primarily affect manufacturers of passenger cars and light trucks. These manufacturers typically do not qualify as small entities under 5 U.S.C. 605(b).

NHTSA estimates that there are about four small manufacturers of passenger cars in the U.S., and no small manufacturers of light trucks, producing a combined total of at most 500 vehicles each year. It is unknown how many of their vehicle models will meet the amendments made in this final rule. The agency requested comments on this issue in the NPRM, but received none.

As discussed above in the section on Compliance Responsibility of Second-Stage Manufacturers, there are a large number of second-stage and final-stage manufacturers. The agency believes that there will be no change to the certification responsibilities of second-stage and final-stage manufacturers as a result of this rulemaking.

Consequently, the agency has concluded that this rulemaking will not have a significant economic impact on a substantial number of small entities.

*C. National Environmental Policy Act*

NHTSA has analyzed this rulemaking action for the purposes of the National Environmental Policy Act. The agency has determined that implementation of this rule will not have any significant impact on the quality of the human environment.

*D. Executive Order 13132 (Federalism)*

Executive Order 13132 requires NHTSA to develop an accountable process to ensure ''meaningful and timely input by State and local officials in the development of regulatory policies that have federalism implications.'' ''Policies that have federalism implications'' is defined in the Executive Order to include regulations that have ''substantial direct effects on the States, on the relationship between the national government and the States, or on the distribution of power and responsibilities among the various levels of government.'' Under Executive Order 13132, the agency may not issue a regulation with Federalism implications, that imposes substantial direct compliance costs, and that is not required by statute, unless the Federal government provides the funds necessary to pay the direct compliance costs incurred by State and local governments, the agency consults with State and local governments, or the agency consults with State and local officials early in the process of developing the regulation. NHTSA also may not issue a regulation with Federalism implications and that preempts State law unless the agency consults with State and local officials early in the process of developing the regulation.

The agency has analyzed this final rule in accordance with the principles and criteria set forth in Executive Order 13132 and has determined that it will not have sufficient federalism implications to warrant consultation with State and local officials or the preparation of a federalism summary impact statement. The final rule will not have any substantial effects on the States, or on the current Federal-State relationship, or on the current distribution of power and responsibilities among the various local officials.

*E. Civil Justice Reform*

This final rule will not have any retroactive effect. Under 49 U.S.C. 30103, whenever a Federal motor vehicle safety standard is in effect, a State may not adopt or maintain a safety standard applicable to the same aspect of performance which is not identical to the Federal standard, except to the extent that the state requirement imposes a higher level of performance and applies only to vehicles procured for the State's use. 49 U.S.C. 30161 sets forth a procedure for judicial review of final rules establishing, amending, or revoking Federal motor vehicle safety standards. That section does not require submission of a petition for reconsideration or other administrative proceedings before parties may file suit in court.

*F. Paperwork Reduction Act*

Under the procedures established by the Paperwork Reduction Act of 1995, a person is not required to respond to a collection of information by a Federal agency unless the collection displays a valid OMB control number. For the phase-in reporting requirements, which were not proposed in the notice of proposed rulemaking, but are added in this Final Rule, NHTSA is submitting to OMB a request for approval of the following collection of information. Public comment is sought on the proposed collection.

*Agency:* National Highway Traffic Safety Administration (NHTSA).

*Title:* Phase-In Production Reporting Requirements for Fuel Systems Integrity Upgrade.

*Type of Request:* New collection.

*OMB Clearance Number:* None assigned.

*Form Number:* This collection of information will not use any standard forms.

*Requested Expiration Date of Approval:* Three years from the date of approval.

Summary of the Collection of Information

So that NHTSA can ensure that vehicle manufacturers are certifying their applicable vehicles as meeting the rear impact test upgrades that are specified in this final rule, in this proposed collection, NHTSA would require vehicle manufacturers to provide reports on compliance of their vehicles with the rear impact test upgrade.

For the rear impact test upgrade, NHTSA established a six year schedule; a three year lead time, then a 3-year phase-in period during which, in the

first year, 40% of the applicable vehicles must meet the rear impact test upgrade, and in the second and third years, 70% and 100% respectively.

For each year of the rear impact test phase-in period, manufacturers must, within 60 days after the end of the ''production year,'' provide to NHTSA information identifying the vehicles (by make, model, and vehicle identification number (VIN)) that have been certified as complying with the rear impact test upgrade. Furthermore, until December 31, 2009, each manufacturer must maintain records of the VIN for each vehicle for which information is reported.

Description of the Need for the Information and Proposed Use of the Information

NHTSA requires this information to ensure that vehicle manufacturers are certifying their applicable vehicles as meeting the new rear impact test upgrades that are specified in this final rule. NHTSA will use this information to determine whether a manufacturer has complied with the amended requirements of Standard No. 301 during the phase-in period.

Description of the Likely Respondents (Including Estimated Number, and Proposed Frequency of Response to the Collection of Information)

NHTSA estimates that 21 vehicle manufacturers will submit the required information. The manufacturers are makers of passenger cars, multipurpose passenger vehicles, trucks and buses that have gross vehicle weight ratings of 4,536 kg (10,000 pounds) or less, and use fuel with a boiling point above 0 degrees Celsius. For each report, the manufacturer will provide, in addition to its identity, several numerical items of information. This information would include:

(a) Total number of vehicles manufactured for sale during the preceding production year,

(b) Total number of vehicles manufactured during the production year that meet the new regulatory requirements, and

(c) Information identifying the vehicles (by make, model, and vehicle identification number (VIN)) that have been certified as complying with the side impact test upgrade or the rear impact test upgrade.

During the phase-in period, each manufacturer will provide 1 report per year for three years for the rear impact phase-in, for a total of 3 reports over 3 years.

Estimate of the Total Annual Reporting and Recordkeeping Burden Resulting From the Collection of Information

NHTSA estimates that each manufacturer will incur two burden hours per year per report. This estimate is based on the fact that data collection will involve only computer tabulation and that manufacturers will provide the information to NHTSA in an electronic (as opposed to paper) format. Thus, for the rear impact test upgrade reporting, each manufacturer will incur a burden of two hours or a total on industry of 42 hours a year (assuming there are 21 manufacturers) to provide the rear impact test upgrades.

NHTSA estimates that the recordkeeping burden resulting from the collection of information will be 0 hours because the information will be retained on each manufacturer's existing computer systems for each manufacturer's internal administrative purposes.

NHTSA estimates that the total annual cost burden will be 1050 dollars (42 total annual burden hours × 25 dollars/hour). There would be no capital or start-up costs as a result of this collection. Manufacturers can collect and tabulate the information by using existing equipment. Thus, there would be no additional costs to respondents or recordkeepers.

NHTSA requests comment on its estimates of the total annual hour and cost burdens resulting from this collection of information. Please submit any comments to the NHTSA Docket Number referenced in the heading of this notice or to: Dr. William J. J. Liu, Office of Crashworthiness Standards, National Highway Traffic Safety Administration, 400 Seventh St., SW., Washington, DC 20590. Dr. Liu's telephone number is: (202) 366–2264. Comments are due by January 30, 2004.

*G. National Technology Transfer and Advancement Act*

Section 12(d) of the National Technology Transfer and Advancement Act of 1995 (NTTAA), Pub. L. 104–113, section 12(d) (15 U.S.C. 272) directs NHTSA to use voluntary consensus standards in its regulatory activities unless doing so would be inconsistent with applicable law or otherwise impractical. Voluntary consensus standards are technical standards (*e.g.*, materials specifications, test methods, sampling procedures, and business practices) that are developed or adopted by voluntary consensus standards bodies, such as the Society of Automotive Engineers (SAE). The NTTAA directs NHTSA to provide Congress, through OMB, explanations when the agency decides not to use available and applicable voluntary consensus standards.

There are no voluntary consensus standards available at this time. However, NHTSA will consider any such standards when they become available.

*H. Unfunded Mandates Reform Act*

Section 202 of the Unfunded Mandates Reform Act of 1995 (UMRA) requires Federal agencies to prepare a written assessment of the costs, benefits, and other effects of proposed or final rules that include a Federal mandate likely to result in the expenditure by State, local, or tribal governments, in the aggregate, or by the private sector, of more than $100 million in any one year (adjusted for inflation with base year of 1995). Before promulgating a rule for which a written statement is needed, section 205 of the UMRA generally requires NHTSA to identify and consider a reasonable number of regulatory alternatives and adopt the least costly, most cost-effective, or least burdensome alternative that achieves the objectives of the rule. The provisions of section 205 do not apply when they are inconsistent with applicable law. Moreover, section 205 allows NHTSA to adopt an alternative other than the least costly, most cost-effective, or least burdensome alternative if the agency publishes with the final rule an explanation why that alternative was not adopted.

This final rule will not result in the expenditure by State, local, or tribal governments, in the aggregate, or by the private sector, of more than $100 million annually. Consequently, no Unfunded Mandates assessment has been prepared.

*I. Regulation Identifier Number (RIN)*

The Department of Transportation assigns a regulation identifier number (RIN) to each regulatory action listed in the Unified Agenda of Federal Regulations. The Regulatory Information Service Center publishes the Unified Agenda in April and October of each year. You may use the RIN contained in the heading at the beginning of this document to find this action in the Unified Agenda.

*J. Privacy Act*

Anyone is able to search the electronic form of all submissions received into any of our dockets by the name of the individual submitting the comment (or signing the comment, if submitted on behalf of an association, business, labor union, *etc.*). You may

review DOT's complete Privacy Act Statement in the **Federal Register** published on April 11, 2000 (Volume 65, Number 70; Pages 19477–78) or you may visit *http://dms.dot.gov.*

**List of Subjects**

*49 CFR Part 571*

Imports, Motor vehicle safety, Reporting and recordkeeping requirements, Tires.

*49 CFR Part 586*

Reporting and recordkeeping requirements.

■ In consideration of the foregoing, NHTSA is amending 49 CFR part 571 and revising part 586 as follows:

## PART 571—FEDERAL MOTOR VEHICLE SAFETY STANDARDS

■ 1. The authority citation for part 571 continues to read as follows:

**Authority:** 49 U.S.C. 322, 30111, 30115, 30117, and 30166; delegation of authority at 49 CFR 1.50.

■ 2. In § 571.214, paragraphs S3(b), (c), (d), and (f) are revised to read as follows:

### § 571.214 Standard No. 214; Side impact protection.

* * * * *

S3 *Requirements.* (a) * * *

(b) When tested under the conditions of S6, each passenger car manufactured on or after September 1, 1996, shall meet the requirements of S5.1, S5.2, and S5.3 in a 53 ± 1.0 km/h impact in which the car is struck on either side by a moving deformable barrier. 49 CFR part 572, subpart F test dummies are placed in front and rear outboard seating position on the struck side of the car. However, the rear seat requirements do not apply to passenger cars with a wheelbase greater than 3,300 mm, or to passenger cars that have rear seating areas that are so small that 49 CFR part 572, subpart F test dummies cannot be accommodated according to the positioning procedure specified in S7.

(c) [Reserved].

(d) [Reserved].

(e) * * *

(f) When tested according to the conditions of S6, each multipurpose passenger vehicle, truck, and bus manufactured on or after September 1, 1998, shall meet the requirements of S5.1, S5.2, and S5.3 in a 53 ± 1.0 km/h impact in which the vehicle is struck on either side by a moving deformable barrier. A 49 CFR part 572, subpart F test dummy is placed in the front outboard seating position on the struck side of the vehicle, and if the vehicle is equipped with rear seats, then another 49 CFR part 572, subpart F test dummy is placed in the outboard seating position of the second seat on the struck side of the vehicle. However, the second seat requirements do not apply to side-facing seats or to vehicles that are so small that the 49 CFR part 572, subpart F test dummy cannot be accommodated according to the procedure specified in S7.

* * * * *

■ 3. In § 571.301, paragraphs S6.2, S6.3, S7.1.6(b), S7.2, and S7.3 are revised, paragraph S8 is added, and Figure 3 is added following Figure 2, to read as follows:

### § 571.301 Standard No. 301; Fuel system integrity.

* * * * *

S6.2 *Rear moving barrier crash.* (a) *Vehicles manufactured before September 1, 2006.* When the vehicle is impacted from the rear by the barrier specified in S7.3(a) of this standard moving at 48 km/h, with 50th percentile test dummies as specified in part 572 of this chapter at each front outboard designated seating position, under the applicable conditions of S7, fuel spillage must not exceed the limits of S5.5.

(b) *Vehicles manufactured on or after September 1, 2006.* When the vehicle is impacted from the rear by a moving deformable barrier 80 ± 1.0 km/h with a 70 percent overlap, with 50th percentile test dummies as specified in part 572 of this chapter at each front outboard designated seating position, under the applicable conditions of S7, fuel spillage must not exceed the limits of S5.5.

S6.3 *Side moving barrier crash.* (a) *Vehicles manufactured before September 1, 2004.* When the vehicle is impacted laterally on either side by a barrier moving at 32 km/h with 50th percentile test dummies as specified in part 572 of this chapter at positions required for testing to Standard No. 208 (49 CFR 571.208), under the applicable conditions of S7, fuel spillage must not exceed the limits of S5.5.

(b) *Vehicles manufactured on or after September 1, 2004.* When the vehicle is impacted laterally on either side by a moving deformable barrier at 53 ± 1.0 km/h with 49 CFR part 572, subpart F test dummies at positions required for testing by S3(b) of Standard No. 214, under the applicable conditions of S7 of this standard, fuel spillage shall not exceed the limits of S5.5 of this standard.

* * * * *

S7.1.6 * * *

(a) * * *

(b) Except as specified in S7.1.1, a multipurpose passenger vehicle, truck, or bus with a GVWR of 4,536 kg or less is loaded to its unloaded vehicle weight, plus the necessary test dummies as specified in S6, plus 136 kg or its rated cargo and luggage capacity weight, whichever is less, secured in the load carrying area and distributed as nearly as possible in proportion to its GAWR. For the purpose of this standard, unloaded vehicle weight does not include the weight of work-performing accessories. Each dummy is restrained only by means that are installed in the vehicle for protection at its seating position.

* * * * *

S7.2 *Side moving barrier test conditions.* (a) *Vehicles manufactured before September 1, 2004.* The side moving barrier crash test conditions are those specified in S8.2 of Standard No. 208 (49 CFR 571.208).

(b) *Vehicles manufactured on or after September 1, 2004.* The side moving deformable barrier crash test conditions are those specified in S6 and S7 of Standard No. 214 (49 CFR 571.214).

S7.3 *Rear moving barrier test conditions.* (a) *Vehicles manufactured before September 1, 2006.* The rear moving barrier test conditions are those specified in S8.2 of Standard No. 208 (49 CFR 571.208), except for the positioning of the barrier and the vehicle. The barrier and test vehicle are positioned so that at impact—

(1) The vehicle is at rest in its normal attitude;

(2) The barrier is traveling at 48 km/h with its face perpendicular to the longitudinal centerline of the vehicle; and

(3) A vertical plane through the geometric center of the barrier impact surface and perpendicular to that surface coincides with the longitudinal centerline of the vehicle.

(b) *Vehicles manufactured on or after September 1, 2006.* The rear moving deformable barrier is the same as that shown in Figure 2 of Standard No. 214 (49 CFR 571.214) and specified in 49 CFR part 587, except as otherwise specified in paragraph S7.3 (b). The barrier and test vehicle are positioned so that at impact—

(1) The vehicle is stationary;

(2) The deformable face of the barrier is mounted on the barrier 50 mm (2 inches) lower than the height from the ground specified in Figure 2 of Standard No. 214 (49 CFR 571.214) (All dimensions from the ground in Figure 2, Front View should be reduced by 50 mm (2 inches.));

(3) The barrier is traveling 80 ± 1.0 km/h; and

(4) The barrier impacts the test vehicle with the longitudinal centerline

of the vehicle parallel to the line of travel and perpendicular to the barrier face within a tolerance of ± 5 degrees. The test vehicle and barrier face are aligned so that the barrier strikes the rear of the vehicle with 70 percent overlap toward either side of the vehicle. So aligned, the barrier face fully engages one half of the rear of the vehicle and partially engages the other half. At impact, the vehicle's longitudinal centerline is located inboard either of the side edges of the barrier by a distance equal to 20 percent of the vehicle's width ± 50 mm (*see* Figure 3). The vehicle's width is the maximum dimension measured across the widest part of the vehicle, including bumpers and molding, but excluding such components as exterior mirrors, flexible mud flaps, marker lamps, and dual rear wheel configurations.

* * * * *

S8 *Phase-In schedule.*

S8.1 *Rear impact test upgrade.* (a) *Vehicles manufactured on or after September 1, 2006 and before September 1, 2007.* For vehicles manufactured on or after September 1, 2006, and before September 1, 2007, the number of vehicles complying with S6.2(b) of this standard must not be less than 40 percent of:

(1) The manufacturer's average annual production of vehicles manufactured on or after September 1, 2003, and before September 1, 2006; or

(2) The manufacturer's production on or after September 1, 2005, and before September 1, 2006.

(b) *Vehicles manufactured on or after September 1, 2007 and before September 1, 2008.* For vehicles manufactured on or after September 1, 2007 and before September 1, 2008, the number of vehicles complying with S6.2(b) of this standard must not be less than 70 percent of:

(1) The manufacturer's average annual production of vehicles manufactured on or after September 1, 2004, and before September 1, 2007; or

(2) The manufacturer's production on or after September 1, 2006, and before September 1, 2007.

(c) *Vehicles manufactured on or after September 1, 2008.* For vehicles manufactured on or after September 1, 2008, the number of vehicles complying with S6.2(b) of this standard must be 100 percent of the manufacturer's production during that period.

S8.2 *Vehicles manufactured in two or more stages.* A final stage manufacturer or alterer may, at its option, comply with the requirements set forth in S8.2.1 and S8.2.2.

S8.2.1 Vehicles manufactured on or after September 1, 2006 and before September 1, 2008 are not required to comply with the requirements specified in S6.2(b) of this standard.

S8.2.2 Vehicles manufactured on or after September 1, 2008 shall comply with the requirements specified in S6.2(b) of this standard.

S8.3 *Vehicles produced by more than one manufacturer.*

S8.3.1 For the purpose of calculating average annual production of vehicles for each manufacturer and the number of vehicles manufactured by each manufacturer under S8.1, a vehicle produced by more than one manufacturer must be attributed to a single manufacturer as follows, subject to S8.3.2:

(a) A vehicle that is imported must be attributed to the importer.

(b) A vehicle manufactured in the United States by more than one manufacturer, one of which also markets the vehicle, must be attributed to the manufacturer that markets the vehicle.

S8.3.2 A vehicle produced by more than one manufacturer must be attributed to any one of the vehicle's manufacturers specified by an express written contract, reported to the National Highway Traffic Safety Administration under 49 CFR part 590, between the manufacturer so specified and the manufacturer to which the vehicle would otherwise be attributed under S8.3.1.

* * * * *

BILLING CODE 4910–59–P

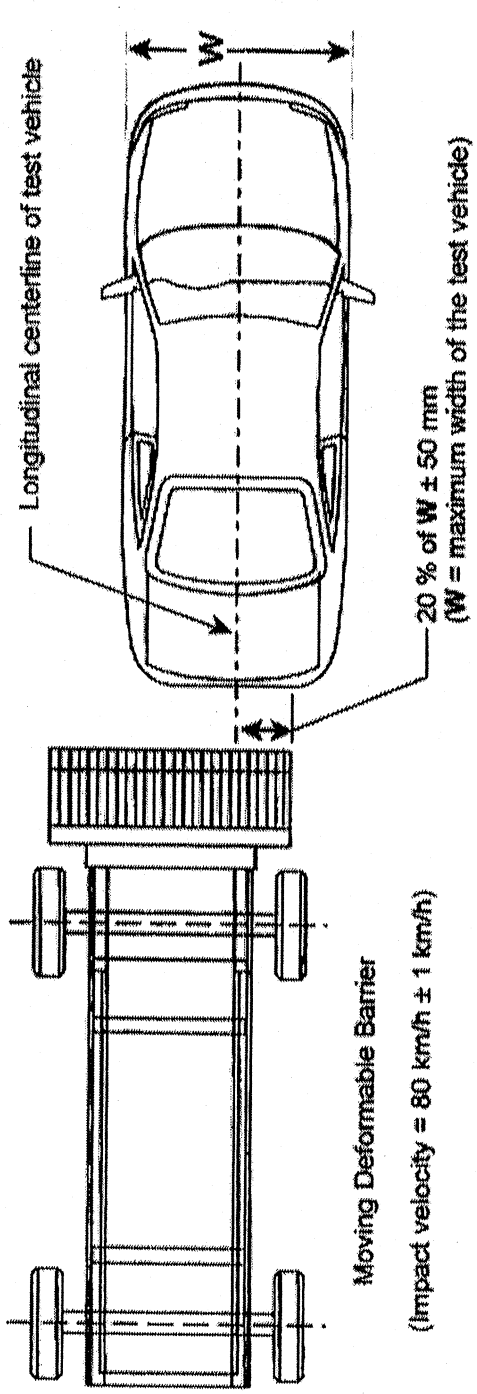


FIGURE 3 – MOVING DEFORMABLE BARRIER REAR IMPACT - 70 % OVERLAP

BILLING CODE 4910–59–C

■ 4. Part 586 is revised to read as follows:

## PART 586—FUEL SYSTEM INTEGRITY UPGRADE PHASE-IN REPORTING REQUIREMENTS

Sec.
586.1 Scope.
586.2 Purpose.
586.3 Applicability.
586.4 Definitions.
586.5 Response to inquiries.
586.6 Reporting requirements.
586.7 Records.
586.8 Petition to extend period to file report.

**Authority:** 49 U.S.C. 322, 30111, 30115, 30117, and 30166; delegation of authority at 49 CFR 1.50.

### § 586.1 Scope.

This part establishes requirements for manufacturers of passenger cars, multipurpose passenger vehicles, trucks, and buses with a gross vehicle weight rating of 4,536 kilograms (10,000 pounds) or less to submit a report, and maintain records related to the report, concerning the number of such vehicles that meet the upgraded requirements of Standard No. 301, *Fuel systems integrity* (49 CFR 571.301).

### § 586.2 Purpose.

The purpose of these requirements is to assist the National Highway Traffic Safety Administration in determining whether a manufacturer has complied with the upgraded requirements of Standard No. 301 (49 CFR 571.301).

### § 586.3 Applicability.

This part applies to manufacturers of passenger cars, multipurpose passenger vehicles, trucks, and buses with a gross vehicle weight rating of 4,536 kilograms (10,000 pounds) or less.

### § 586.4 Definitions.

(a) All terms defined in 49 U.S.C. 30102 are used in their statutory meaning.

(b) *Bus, gross vehicle weight rating, multipurpose passenger vehicle, passenger car, and trucks* are used as defined in 49 CFR 571.3.

(c) *Production year* means the 12-month period between September 1 of one year and August 31 of the following year, inclusive.

### § 586.5 Response to inquiries.

At any time during the production years ending August 31, 2007, August 31, 2008, and August 31, 2009, each manufacturer must, upon request from the Office of Vehicle Safety Compliance, provide information identifying the vehicles (by make, model, and vehicle identification number) that have been certified as complying with S6.2(b) of Standard No. 301 (49 CFR 571.301). The manufacturer's designation of a vehicle as a certified vehicle is irrevocable.

### § 586.6 Reporting requirements.

(a) *Phase-in reporting requirements.* Within 60 days after the end of the production years ending August 31, 2007, August 31, 2008, and August 31, 2009, each manufacturer must submit a report to the National Highway Traffic Safety Administration concerning its compliance with S6.2(b) of Standard No. 301 (49 CFR 571.301) for its passenger cars, multipurpose passenger vehicles, trucks, and buses with a gross vehicle weight rating of less than 4,536 kilograms (10,000 pounds) produced in that year. Each report must—

(1) Identify the manufacturer;

(2) State the full name, title, and address of the official responsible for preparing the report;

(3) Identify the production year being reported on;

(4) Contain a statement regarding whether or not the manufacturer complied with the requirements of S6.2(b) of Standard No. 301 (49 CFR 571.301) for the period covered by the report and the basis for that statement;

(5) Provide the information specified in paragraph (b) of this section;

(6) Be written in the English language; and

(7) Be submitted to: Administrator, National Highway Traffic Safety Administration, 400 Seventh Street, SW., Washington, DC 20590.

(b) *Phase-in report content.*

(1) *Basis for statement of compliance.* Each manufacturer must provide the number of passenger cars, multipurpose passenger vehicles, trucks, and buses with a gross vehicle weight rating of 4,536 kilograms (10,000 pounds) or less manufactured for sale in the United States for each of the three previous production years, or, at the manufacturer's option, for the previous production year. A new manufacturer that has not previously manufactured these vehicles for sale in the United States must report the number of such vehicles manufactured during the current production year.

(2) *Production.* Each manufacturer must report for the production year for which the report is filed: the number of passenger cars, multipurpose passenger vehicles, trucks, and buses with a gross vehicle weight rating of 4,536 kilograms (10,000 pounds) or less that meet S6.2(b) or S6.3(b) of Standard No. 301 (49 CFR 571.301).

(3) *Vehicles produced by more than one manufacturer.* Each manufacturer whose reporting of information is affected by one or more of the express written contracts permitted by S8.3.2 of Standard No. 301 (49 CFR 571.301) must:

(i) Report the existence of each contract, including the names of all parties to the contract, and explain how the contract affects the report being submitted.

(ii) Report the actual number of vehicles covered by each contract.

### § 586.7 Records.

Each manufacturer must maintain records of the Vehicle Identification Number for each vehicle for which information is reported under § 586.6(b)(2) until December 31, 2010.

### § 586.8 Petition to extend period to file report.

A manufacturer may petition for extension of time to submit a report under this part. A petition will be granted only if the petitioner shows good cause for the extension and if the extension is consistent with the public interest. The petition must be received not later than 15 days before expiration of the time stated in § 586.6(a). The filing of a petition does not automatically extend the time for filing a report. The petition must be submitted to: Administrator, National Highway Traffic Safety Administration, 400 Seventh Street, SW., Washington, DC 20590.

Issued: November 21, 2003.

**Jeffrey W. Runge,**

*Administrator.*

[FR Doc. 03–29805 Filed 11–25–03; 1:17 pm]

BILLING CODE 4910–59–P

---

## DEPARTMENT OF COMMERCE

## National Oceanic and Atmospheric Administration

## 50 CFR Part 679

**[Docket No. 030804191-3286-02; I.D. 071603A]**

**RIN 0648–AR31**

## Fisheries of the Exclusive Economic Zone Off Alaska; Allocation of Pacific Cod Among Fixed Gear Sectors

**AGENCY:** National Marine Fisheries Service (NMFS), National Oceanic and Atmospheric Administration (NOAA), Commerce.

**ACTION:** Final rule.

**SUMMARY:** NMFS issues a final rule to implement Amendment 77 to the Fishery Management Plan for the Groundfish Fishery of the Bering Sea and Aleutian Islands Area (FMP). This

action apportions the fixed gear portion of the Bering Sea and Aleutian Islands Management Area (BSAI) Pacific cod total allowable catch (TAC) among the fixed gear sectors. In addition, this action further splits the pot sector share of the TAC between pot catcher/processors and pot catcher vessels and changes how the 2 percent annual BSAI Pacific cod allocation to jig gear is seasonally apportioned and how unused portions are reallocated to other gear types. Amendment 77 and its implementing regulations are necessary to maintain the stability of the fixed gear Pacific cod fishery. This action is intended to promote the goals and objectives of the Magnuson-Stevens Fishery Conservation and Management Act (Magnuson-Stevens Act), the FMP, and other applicable laws.

**DATES:** Effective January 1, 2004.

**ADDRESSES:** Copies of the Environmental Assessment/Regulatory Impact Review/Final Regulatory Flexibility Analysis (EA/RIR/FRFA) prepared for this action may be obtained from the Alaska Region, NMFS, P.O. Box 21668, Juneau, AK, 99802, Attn: Lori Durall; or by calling 907–586–7247.

**FOR FURTHER INFORMATION CONTACT:** Nina Mollett, 907–586–7462 or Nina.Mollett@noaa.gov.

**SUPPLEMENTARY INFORMATION:** NMFS manages the groundfish fisheries in the exclusive economic zone of the BSAI under the FMP. The North Pacific Fishery Management Council (Council) prepared the FMP under the authority of the Magnuson-Stevens Act, 16 U.S.C. 1801, *et seq.* Regulations governing the groundfish fishery of the BSAI appear at 50 CFR part 679. General regulations governing U.S. fisheries also appear at 50 CFR part 600.

## Background

The Council submitted Amendment 77 to NMFS for review and a Notice of Availability of the FMP amendment was published in the **Federal Register** on July 22, 2003 (68 FR 43342), with comments on the FMP amendment invited through September 22, 2003. The Secretary of Commerce approved Amendment 77 on October 20, 2003. The proposed rule to implement Amendment 77 was published on August 18, 2003 (68 FR 49416). The public comment period on the proposed rule ended on October 2, 2003. NMFS received letters from ten persons on either the FMP amendment, the proposed rule, or both. NMFS responds to these letters in ''Response to Comments,'' below.

Allocation of the BSAI Pacific cod TAC among gear types began in 1994, with the passage of Amendment 24 to the FMP. Amendment 24, and subsequently Amendment 46, allocated the Pacific cod TAC among vessels using jig gear, trawl gear, and fixed gear (hook-and-line and pot.) Under Amendment 46, which was implemented in 1997, 2 percent of the TAC was reserved for jig gear, 51 percent for fixed gear, and 47 percent for trawl gear. The amendment further split the trawl apportionment equally between catcher vessels and catcher/processors, but the fixed gear allocation was not split among the fixed gear sectors until passage of Amendment 64 in 2000 (65 FR 51553, August 24, 2000). Amendment 64 and its implementing regulations are scheduled to expire on January 1, 2004.

Amendment 64 allocated the fixed gear portion of the BSAI Pacific cod TAC among its four sectors as follows:

- 80.0 percent to hook-and-line catcher/processors;
- 0.3 percent to hook-and-line catcher vessels;
- 18.3 percent to pot vessels; and
- 1.4 percent to catcher vessels less than 60 ft (18.3 m) length overall (LOA), including pot and hook-and-line vessels (hereafter referred to as small catcher vessels).

Additional background on the prior history of Pacific cod allocations among different fishery sectors and the development of Amendment 77 is contained in the preamble to the proposed rule. Amendment 77 and its implementing regulations supersede Amendment 64.

This final rule allocates the fixed gear portion of the BSAI Pacific cod TAC among the fixed gear sectors. Vessels using hook-and-line or pot gear receive 51 percent of the Pacific cod TAC in the BSAI, under existing regulations at § 679.20(a)(7)(i)(A). Of this 51 percent, this final rule will allocate the TAC as follows:

- 80.0 percent to hook-and-line catcher/processors;
- 0.3 percent to hook-and-line catcher vessels;
- 3.3 percent to pot catcher/processors;
- 15.0 percent to pot catcher vessels; and
- 1.4 percent to small catcher vessels.

This preserves the allocation implemented under Amendment 64, but splits the pot vessel share further between pot catcher/processors and pot catcher vessels.

Amendment 77 directs that ''specific provisions for the accounting of these directed fishing allowances and the transfer of unharvested amounts of these allowances to other vessels using hook-and-line or pot gear will be set forth in regulations.''

Hence, the final rule maintains status quo provisions, except for a change in the way the 2 percent annual BSAI Pacific cod allocation to the jig gear sector is seasonally apportioned and how unused portions of the jig gear share are reallocated (rolled over) to other gear types. The jig gear quota will be apportioned through the annual TAC-setting process on a four-month basis, 40 percent, 20 percent, and 40 percent respectively for the periods January through April, May through August, and September through December. Unused jig allocations in each four-month period will be reallocated to small catcher vessels. If the small catcher vessels are unable to harvest the rolled over jig allocation, NMFS may reallocate the unused TAC to the hook-and-line catcher/processor fleet under § 679.20(a)(7)(ii)(B) of this final rule.

This reallocation policy has been contentious because the previous policy was to reallocate all unused jig gear to the hook-and-line catcher/processors. The new rollover provision represents a partial reallocation of unused jig gear from the hook-and-line catcher/processors to smaller catcher vessels. The new rollover provision was a compromise among the alternatives analyzed, because some or all of the allocation from the third four-month period probably will not be harvested by the small catcher vessels and will instead be reallocated to hook-and-line catcher/processors. The small boat fleet is most capable of fishing in the spring and summer when the weather is better than in the fall and winter. Also, the small pot catcher vessels only need a separate quota between the A and B seasons established under Steller sea lion protection measures (between June 10 and September 1), when the Pacific cod fishery is closed to pot vessels greater than or equal to 60 ft (18.3 m) LOA. At other times, the small pot catcher vessels can fish off the general 15 percent pot catcher vessel quota. Hook-and-line vessels of any size normally are prohibited from fishing for Pacific cod in the summer between June 10 and August 15, because they typically receive no halibut bycatch under the annual harvest specifications during this time period. Without a bycatch allowance, they cannot fish. Pot and jig gear vessels would be the only fixed gear vessels with access to the Pacific cod resource during this period.

## Response to Comments

With one exception, all of the letters received by NMFS commenting on

Amendment 77 or the proposed rule focused on the Council's action to change the way unharvested jig gear quota is reallocated. Six commenters wrote in support of that change, and three in opposition. The comments otherwise were generally supportive of Amendment 77 and the proposed rule implementing it. The tenth commenter did not address the provisions of Amendment 77 but criticized fishing in the North Pacific more generally. No comments were received on the proposed TAC split between pot catcher vessels and pot catcher processors. The comments on the proposed change in jig gear reallocation have been grouped by subject matter. Some of the arguments were made by more than one respondent.

*Comments on Economic and Equity Issues and Compliance With National Standards*

*Comment 1:* The proposed reallocation of unharvested jig quota is inconsistent with national standard 5: ''Conservation and management measures shall, where practicable, consider efficiency in the utilization of fishery resources; except that no such measure shall have economic allocation as its sole purpose.''

Many measures that the Council has adopted include reallocations, but such measures have usually also provided improved ease of management or an increased conservation benefit. In this case, the proposed rollover provisions complicate management and have potential adverse risk in regards to Steller sea lions.

*Response:* The main purpose of Amendment 77 is to maintain stability in the Pacific cod BSAI fishery by maintaining the TAC allocations for fixed gear sectors that have been in effect since September 1, 2000. The relatively modest reallocation of unused jig gear TAC to small catcher vessels is consistent with that goal. It maintains the Council's original intent to support coastal fisheries through an allocation that will benefit a group of vessels with similarities to the jig gear sector for which the quota was originally intended.

In addition, this action will support biological conservation objectives of the FMP, because the vessels potentially receiving unused Pacific cod TAC from the jig gear sector primarily will be vessels less than 60 ft (18.3 m) LOA that use pot gear. These vessels have a relatively low bycatch rate for halibut, most groundfish, and most other marine species. Hence, NMFS finds that this action is consistent with National Standard 5.

The final rule implementing Amendment 77 will slightly increase the complexity of inseason management because of the seasonal apportionments of the jig gear quota and associated rollover provisions for the unharvested amounts. Staff resources are available, however, to accommodate this fairly routine adjustment in management of the Pacific cod TAC.

The action does not change the Steller sea lion protection measures that are currently in place; any change in the potential risk to Steller sea lions is discussed in the response to Comments 16 to 19.

*Comment 2:* The proposed rollover of unharvested jig quota is inconsistent with National Standard 10: ''Conservation and management measures shall, to the extent practicable, promote the safety of human life at sea.'' Reallocation of TAC to small boats would pose safety at sea considerations. Fishing in the Bering Sea can be dangerous, which is why ''small boat participation in the directed Pacific-cod fishery has been minimal in this region even during the years of unrestricted open access.≥

*Response:* The Pacific cod TAC allocations created by this action are assigned to categories of vessels and gear types. Several potential new rollover provisions were considered, and the selected provision was specifically developed to provide additional cod for the small catcher vessel sector during the months when these vessels prefer to fish, for safety reasons. Without the additional opportunity to harvest cod during the summer months, the small catcher vessel sector would be more likely to continue to compete for the portion of the cod TAC allocated to the general pot catcher vessel sector and general hook-and-line catcher vessel sector (available to vessels of all lengths) during the late winter and early spring. Providing for a reallocation of jig quota to the small catcher vessel sector may encourage these vessels to delay fishing until the summer months, when it is considered most safe for smaller vessels in the BSAI.

*Comment 3:* The proposal for the new rollover provision was initiated not by a pot vessel but a jig fisherman from Dutch Harbor, whose stated reasons included both safety and ecological concerns. From a safety perspective, this action would encourage the presence of other small vessels nearshore, which would enhance safety for the small number of jig vessels participating in the BSAI jig gear fishery.

*Response:* To the extent that this action increases the number of vessels available to provide aid to a vessel in need, this final rule could enhance safety during the summer months. Also see response to comment 2.

*Comment 4:* The proposed rollover of unharvested Pacific cod TAC from jig gear supports the National Standard 1 requirement to provide ''optimum yield from each fishery.'' The RIR analysis shows that the highest average value per metric ton of round cod is inshore deliveries from fixed gear catcher vessels (p 79).

*Response:* The Council did not attempt to determine which sector is most efficient in making its decision on unused jig gear cod allocations. The jig gear cod allocation amounts to only 2 percent of the total BSAI Pacific cod quota. The Council's action was intended to roughly maintain the status quo, while enhancing an opportunity for relatively small catcher vessels to continue participating in the fishery.

*Comment 5:* Freezer-longliners are highly efficient, producing frozen product of the highest quality and value. By contrast, cod kept on ice and processed long after harvest are of a lower quality and command a lower price.

*Response:* Please see the response to Comment 4.

*Comment 6:* The freezer-longliner sector has received the jig rollovers for 10 years and has grown dependent on them. The small catcher vessel fleet has not taken the rollovers, and is in no way dependent on them. The proposed reallocation of a portion of these rollovers to a fleet that 'needs room to grow' is not consistent with the problem statement.

The proposed rollover provisions would take TAC from the freezer longliners with a historic long-term dependency on the resource and the jig rollovers, and give the TAC to a sector with considerably less dependency on the resource. Of 125 vessels that qualify for the less than 60 ft (18.3 m) sector, only 32 have ever made a directed landing; in 2002, only 19 of them made a directed landing.

*Response:* The Council and NMFS' intent in allocating 2 percent of the total BSAI Pacific cod quota to jig gear in Amendment 64 (65 FR 51553, August 24, 2000) was to foster limited development of a small, low-impact coastal fishery. If the jig fleet were to harvest its entire quota, consistent with the intent of Amendment 64, the alleged ''dependency'' of the catcher processor fleet on the unused jig TAC would be moot.

Because the jig fleet has been unable to catch as much of its quota as expected or even as much as it had been

catching for the previous several years, the Council decided to reallocate unused jig quota to a similar small-vessel sector. A substantial percentage of the unused jig quota, however, likely will continue to be reallocated to the hook-and-line catcher processor sector in the last few months of the year due to the seasonal allocations; the small boat sector is unlikely to be able to use quota later in the year. Hence, this action represents a compromise in which the interests of each sector with a stake in the outcome were taken into consideration.

The RIR analyzed the change in the amount of TAC that the affected sectors would receive as a result of the change in rollover provisions. According to the analysis, since the implementation of Amendment 64, cod quota allocated from the jig sector has accounted for about 3.3 percent of the hook-and-line catcher processors' total catch and 0.5 percent of the pot sector's total catch. If unharvested jig gear quota is reallocated to the small catcher vessel sector, the RIR estimates the maximum annual potential loss from the hook-and-line sector at 3.7 percent of their catch, and 0.9 percent from the pot sector. This additional quota would be more than twice the amount of quota the small catcher vessel sector has received under its 1.4 percent allocation under Amendment 64. This estimate of reduced catch for the hook-and-line catcher-processors assumes that the small catcher vessel sector can harvest all of the unused TAC from the jig sector, which averaged 3,671 mt during 1995—2001. However, that does not take into account the effect of the seasonal quotas implemented under the final rule, under which the entire 40 percent allocation for the last four-month period, and perhaps some of the second four-month period reallocation, will most likely be reallocated to the catcher-processors because the small catcher vessels will not be able to use it; in the last four-month period, weather conditions likely would preempt the small boat fleet from operating. Furthermore, as of September 1, when the Pacific cod B season for pot catcher vessels greater than or equal to 60 ft (18.3 m) opens, small pot catcher vessels would be fishing, along with the larger catcher vessels, from the general pot catcher vessel allocation, which is 15 percent of the fixed gear TAC.

*Comment 7:* The proposed reallocation of unused jig gear TAC is consistent with the Council's intent to develop economic stability for the small boat fleet in coastal communities that service that fleet, as demonstrated by establishing a special jig quota. However, the realities of markets, safety, weather and technology have supported little growth in the jig gear sector. Small pot gear boats and hook-and-line gear boats support the same coastal communities that the jig quota was intended to benefit, with similar employment characteristics, harvest rates, discard performance, bycatch performance, coastal community ties and technology limitations. All of these smaller vessels support shore-based processors and the community of Dutch Harbor, and many of the same people working on small pot boats also work on the small jig vessels. The small boat fleet is more likely to employ Alaskan crew members who live in coastal communities and will spend dollars in those communities.

The Council's rollover requirement is consistent with the original intent of the allocation to the jig sector, which was to develop economic stability for the small boat fleet in Alaska's coastal communities. The economic well being of the less than 60 ft (18.3 m) LOA hook-and-line and pot vessels is also important to Alaska's coastal communities, and the rollover provisions in Amendment 77 provide a fair allocation to those sectors.

*Response:* NMFS agrees that the Council's intent in allotting 2 percent of the Pacific cod quota to the jig fleet was to provide additional fishing opportunities for relatively small vessels and benefit the coastal communities where they are based. This action modifies the direction of the reallocation of unused jig quota, consistent with the Council's original intent to provide support for the small boat fleet.

*Comment 8:* In adopting Amendment 77, the Council created a well-structured compromise to distribute the unused portion of the jig sector's Pacific cod allocation between catcher vessels less than 60 ft (18.3 m) LOA and the hook-and-line catcher/processor fleet. Under the proposed requirements, vessels less than 60 ft (18.3 m) LOA will have the opportunity to harvest the unused jig gear allocation in the first eight months of the year. These small boats have limited fishing opportunities in the last four months due to weather and other factors, so a significant portion of the unused jig quota will be made available to the hook-and-line catcher/processor fleet during these months.

*Response:* See response to Comment 7.

*Comment 9:* The effect of this Council action is very minor in terms of the freezer longliner sector, less than 2 percent of their annual catch, but the benefit to the less than 60 ft (18.3 m) LOA fixed gear sector is of huge significance in providing enough quota for a viable fishery. This reallocation is supported in the draft EA and has the support of many small boat fishermen.

*Response:* NMFS notes this position.

*Comment 10:* The 2–percent jig quota was not designed to benefit all small vessels. Instead, it was meant to provide an entry-level opportunity for jig fishermen only; rollovers were to go to freezer-longliners, as originally negotiated.

*Response:* Regardless of prior negotiation among industry representatives, Council action on Amendment 77 recommended a change to the regulations governing the reallocation of unharvested jig gear TAC. The Council's recommended change has been approved by NMFS. The effect of this change is to provide increased potential benefits from unused jig gear TAC to small catcher vessels. Catcher processor vessels, however, may still enjoy some of the benefit from this reallocated jig TAC to the extent that small catcher vessels are not able to harvest all of it.

*Comment 11:* Any increase to the allocation to the less than 60 ft (18.3 m) sector should occur with all gear groups under consideration and not just fixed gear. NMFS needs to continue current allocations as a means of maintaining stability for this fully utilized resource.

*Response:* This action was not intended to reconsider the allocations among the trawl, fixed gear, and jig gear sectors of the BSAI Pacific cod fishery. Amendment 77 does not change the overall Pacific cod allocations that were established in Amendment 46, nor does it change the allocations to the hook-and-line catcher processor sector, hook-and-line catcher vessel sector, or combined pot gear sectors established in Amendment 64. The only changes are a further split between the two pot gear sectors, and a change in the reallocation of unused jig gear TAC during a fishing year. NMFS does not agree that a decision about the reallocation of this relatively small amount of TAC must reopen the question of all allocations for Pacific cod in the BSAI. Amendment 64 contained a sunset provision partly so that fixed gear allocation issues could be revisited. The EA/RIR prepared for this action supports the contention that any of the options for reallocation of unused jig gear considered by the Council would maintain the desired stability.

*Comment 12:* When Amendment 67 was adopted, the Council exempted catcher vessels less than 60 ft (18.3 m) LOA from the requirement of having made recent landings to qualify for

License Limitation Program (LLP) licenses, so that about 130 vessels in this category qualified under the LLP. Amendment 64 allocated 1.4 percent of BSAI Pacific cod fixed gear TAC to small catcher vessels. At the time, the fact that 130 LLP-licensed vessels were eligible to participate, but could harvest only a very small percentage of the BSAI Pacific cod TAC, was identified as a problem that would present challenges at a later date.

*Response:* The Council's reallocation of unharvested jig gear Pacific cod is partly an effort to provide an enhanced opportunity to vessels qualified to fish, but which have little quota to fish for.

*Comment 13:* There is a limit on new boats able to enter the small boat fixed gear fishery for cod, so no new open access derby has been created.

*Response:* Some vessels qualified to fish under the LLP may enter the fishery because of this action, which was designed partly to give the small vessel fleet enhanced opportunities to harvest cod during the months of the year when it is most preferable for small boats in the BSAI. However, any new ''derby'' or race-for-fish resulting from the expanded opportunity provided by rolled over jig gear quota would be limited by the limited access program, as well as the fact that the amount of fish in question is relatively small (see response to Comment 6).

*Comment 14:* The proposed change disrupts and destabilizes the fishery prior to the completion of comprehensive rationalization.

*Response:* Please see the responses to Comments 7 and 13.

*Comment 15:* Although the Council's decision was sensible, behind-the-scenes lobbying by one sector might succeed in overturning it at the NMFS level; small vessel owners cannot afford lobbyists and lawyers.

*Response:* The notice and comment provisions of the Magnuson-Stevens Act and the Administrative Procedure Act provide everyone an equal opportunity to submit oral or written comments during the decisionmaking process. NMFS considers all comments submitted and believes that all interested parties have had ample opportunity during the Council meetings and during the rulemaking process to make their views known and considered. The decision is based on the record.

*Comments on Potential Impacts to Steller Sea Lions*

*Comment 16:* The proposed jig rollover regulations should consider cumulative impacts and should be examined in conjunction with similar proposed actions that could potentially move harvest from offshore into nearshore areas in the context of cumulative effects on Steller sea lions. These include Gulf of Alaska rationalization and State of Alaska 2004 Board of Fisheries (BOF) proposals. BOF Proposal 177 would have the largest potential negative impacts for Steller sea lions. Proposal 177 would allocate 10 to 15 percent of the BSAI federal Pacific cod TAC to a new state waters fishery to be taken only by pot, jig, and hand troll gear.

The possibility also exists of creating a pollock fishery at Adak, or a rockfish test fishery in the Gulf of Alaska. No formal analysis of potential cumulative impacts has occurred.

*Response:* NMFS is required by NEPA to analyze cumulative effects, and such an analysis is in the EA at Section 2.4. Such an analysis should consider actions that have occurred and actions that have not yet been taken, but have a high probability of occurring. In correspondence with the State of Alaska to develop a response to this comment, NMFS has learned that although several proposals have been made which would give the State management of part of the BSAI TAC of Pacific cod in State waters (the fraction of the TAC and the specific area involved vary among the proposals), due to budgetary constraints and to other priority items on the State Board of Fish agenda, it is unlikely that the board will be reviewing or considering any of those proposals at any time in the foreseeable future.

The other actions mentioned are similarly speculative, and likely would require new statutory authority. Both the GOA Rationalization plan and the proposed rockfish test fishery would occur in the Gulf of Alaska rather than in the BSAI. If and when any of these actions are proposed in the form of concrete actions, the analyses for those actions will consider potential cumulative impacts on Steller sea lions.

*Comment 17:* In regards to the 2001 Biological Opinion and its 2003 supplement, the proposed jig rollover regulations pose more risk to Steller sea lions than the status quo jig rollover provisions which assign the unused quota to the hook-and-line catcher processor sector, which fishes further from shore. It would be prudent of NMFS to examine the potential redistribution of harvest to near shore areas particularly in light of the cumulative effects of pending similar actions.

This action would reallocate Pacific cod from a predominantly offshore fishery (hook-and-line catcher processors) to a nearshore fishery (small catcher vessels) that has a high probability of increasing harvest in critical habitat, particularly inside of 10 nautical miles (nm); and of increasing harvest inside 3–10 nm by the pot gear fishery.

*Response:* In developing the proposed rule, NMFS conducted an informal consultation consistent with section 7 of the Endangered Species Act. This consultation determined that the catch of Pacific cod would likely increase inside Steller sea lion critical habitat during the spring and summer months. However, this increase would be relatively small and would remain within the overall goal of distributing the Pacific cod TAC by season. Additionally, that catch would likely go to fixed gear fisheries (pot and hook-and-line) which are likely to have less impacts on the prey field for Steller sea lions than trawl gear (see the 2001 Biological Opinion for more information). The conclusion of the informal consultation is that the reallocation of unharvested jig gear quota is not likely to adversely affect the western distinct population segment of Steller sea lions, or their critical habitat.

In response to comments concerning Steller sea lions submitted on the proposed rule, NMFS enhanced the EA to clarify further the reasons for the conclusion of the informal consultation. Section 4.2.1 of the EA contains a detailed explanation of this issue.

*Comment 18:* Statements were added to the EA, after the Council took action on Amendment 77, in regards to Steller sea lions that appear to be contradictory and inconsistent with the 2001 Biological Opinion and its 2003 supplement. This is ''revisionary history.'' The statements need to be amended. The proposed rule did not contain a discussion of Steller sea lions impacts. The proposed rule should address the potential impacts of the proposed rollover provisions on Steller sea lions. NMFS should correct the statement that vessels using pot gear are exempt from Steller sea lions measures because the rate of harvest is sufficiently slower than other gear types to be less of a factor: Pots are not exempt from NMFS' Steller sea lions protection measures. NMFS has concluded that they have little evidence to indicate which gear type is more or less likely to locally deplete prey. The hook-and-line harvest is less concentrated than the pot harvest. There is no correlation between vessel size and local depletion. The EA supplies erroneous reasoning why the pot catcher vessels are exempt from the A and B season Pacific cod apportionments. The EA says the pot exemption is because of lower harvest

rates, but actually the exemption was due to the small magnitude of the allocation and the difficulty of splitting the allocation into an A and B season for that sector.

*Response:* NMFS has made some corrections in the EA. Revisions to draft analytical documents during the process of Council and Secretarial decisionmaking are normal. The EA provided to the Council is a draft for Council review. A draft EA is subsequently released for public review and comment, with the proposed rule. Public comments on draft EAs are welcomed by the Council and NMFS and improve the information and analysis that ultimately inform the decision. NMFS appreciates and welcomes public comments on all draft NEPA documents.

*Comment 19:* The commentator supports the final rule and notes that the small catcher vessel fleet is still under the same rules for Steller sea lions as all other vessels.

*Response:* NMFS agrees that the small catcher vessel fleet must abide by the rules for Steller sea lions, as do all other vessels. However, catcher vessels less than 60 ft (18.3 m) LOA are not subject to the seasonal restrictions that apply to the fixed gear vessels greater than or equal to 60 ft (18.3 m) LOA.

*Comments on Habitat and Bycatch Issues*

*Comment 20:* The reallocation of unharvested jig gear quota is consistent with national standard 9: ''Minimize bycatch, and to the extent bycatch cannot be avoided, minimize the mortality of such bycatch.''

The jig fishery is a very low bycatch and low impact fishery, and therefore no bycatch standard or caps are required for the jig fishery. Similarly, no bycatch allocation has been made for pot vessels less than 60 ft (18.3 m) LOA because of the low bycatch. Reallocating unused jig quota to vessels less than 60 ft (18.3 m) will utilize the quota by giving it to the most comparable fishery in terms of low bycatch and low impact. This will maintain the highest compliance with national standard 9. Fishing on pot catcher vessels less than 60 ft (18.3 m) is done in an environmentally sensitive manner.

The EA/RIR/IRFA showed no detrimental or serious adverse impacts from the action.

*Response:* NMFS agrees that pot gear is a relatively selective gear type, and observer coverage on larger pot boats indicates relatively low incidental catch rates for pot gear for most species.

*Comment on Commercial Fisheries*

*Comment 21:* Amendment 77 is wrong. NMFS should stop overfishing, should cut the total catch by 50 percent, and should read the Pew Report. The amendment should stop ALL of the fishing proposed by North Pacific Fishery Management Council, which is composed of commercial fishermen primarily interested in making money from fish stocks which are continually declining.

*Response:* None of the groundfish fisheries managed by NMFS off Alaska are overfished, nor does NMFS allow overfishing to occur in the North Pacific groundfish fisheries. Each year, NMFS specifies overfishing levels for each fishery under its management. For the Pacific cod fishery in the BSAI, which is the fishery of concern in Amendment 77, NMFS specified an overfishing level of 324,000 mt in 2003, but the TAC for 2003 was set at only 207,500 mt. National standard 1 of the Magnuson-Stevens Act requires that conservation and management measures prevent overfishing while achieving optimum yield from each fishery. The management of this fishery is fully in compliance with national standard 1 and all other provisions of the Magnuson-Stevens Act.

## Changes From the Proposed Rule to the Final Rule

One change has been made from the proposed rule to the final rule. In § 679.20, paragraph (a)(7)(ii)(B), has been modified to clarify that if small catcher vessels that receive unused jig gear quota are unable to harvest any of that quota, NMFS may reallocate the unharvested amount as a directed fishing allowance to catcher/processor vessels using hook-and-line gear. The modification does not implement any change of policy from that presented for comment in the proposed rule but instead clarifies the sequence of reallocations of unused jig gear quota.

## Classification

The Administrator, Alaska Region, NMFS, determined that this final rule is necessary for the management of the BSAI groundfish fishery and that it is consistent with the Magnuson-Stevens Act and other applicable laws.

This action has been determined to be not significant under Executive Order 12866. No new reporting, recordkeeping, or compliance requirements are imposed by this final rule.

NMFS has prepared a FRFA, which analyzes the impacts of Amendment 77 on small entities. A copy of this analysis is available from NMFS. The Initial Regulatory Flexibility Analysis (IRFA) is contained in section 4.3 of the EA/RIR/IRFA, and is also available from NMFS. A summary of the findings from the FRFA follows:

A description of the reasons why this action is being considered, and the objectives of and legal basis for this action is contained in the preamble to the proposed rule.

No comments were received specifically on the IRFA. However, several comments were received on the economic impacts of Amendment 77 on different sectors of the industry. For a summary of the comments received, refer to the section above titled ''Comments and Responses.≥

The directly regulated entities for Amendment 77 will be those vessels participating in the Pacific cod fixed gear fishery in the BSAI. A total of about 87 small entities will be directly regulated by this action: 55 pot vessels greater than or equal to 60 ft (18.3 m) LOA; 9 hook-and-line vessels greater than or equal to 60 ft (18.3 m) LOA; and 18 hook-and-line catcher vessels less than 60 ft (18.3 m) LOA.

This regulation does not impose new recordkeeping or reporting requirements on the regulated small entities.

NMFS considered four alternatives and adopted elements of its Alternatives 2 and 4. Because these alternatives often involved tradeoffs between different groups, and because all the groups affected included small entities, some groups of small entities might have experienced smaller adverse impacts under some of these alternatives, but these would have been accompanied by increased adverse impacts for other groups of small entities.

Alternative 1 would allow the fleet allocations to expire. This would increase competition among gear groups for shares of the Pacific cod. This increased competition was expected to reduce the profitability of the fishery in general. Moreover, the heightened competition under this alternative was expected to impose a disproportionate burden on the smallest entities.

Alternative 3 would modify the current BSAI Pacific cod allocations. Under one option, the allocation for catcher vessels less than 60 ft (18.3 m) LOA would either be removed, or would change from 1.4 percent to 0.3 percent, to conform to actual historical catch history from 1995 to1999. Under another option, the allocation for small catcher vessels would be retained at 1.4 percent, but subtracted proportionally from other sectors and not just from hook-and-line catcher processors as occurred under Amendment 64. The

resulting BSAI Pacific cod fixed gear split would translate to slightly different allocations among the fixed gear sectors, depending on which option was chosen. All vessel groups include small entities, and therefore, any difference between the allocation under Alternative 2 and the allocations under any of the options for Alternative 3 would adversely affect some groups with small entities and would have positive effects on other small entities. Thus, none of the Alternative 3 options has less of an adverse impact on small entities than Alternative 2. The option under Alternative 3 to eliminate or decrease the allocation to hook-and-line and pot catcher vessels under 60 feet would adversely impact a group of operations that are relatively small compared to those in other affected sectors.

NMFS adopted a suboption under Alternative 2, its preferred alternative, to reapportion the jig gear allocation (2 percent of the overall BSAI Pacific cod TAC) by four-month period, and reallocate unused jig quota to small catcher vessels. This option may have an adverse impact on the vessels in the hook-and-line catcher-processor and pot sectors which had formerly received 95 percent and 5 percent, respectively, of any jig rollovers. NMFS adopted this provision to benefit a group of small entities that were similar in socioeconomic profile to the jig fleet for which the quota was originally intended, and to benefit small coastal communities. The suboption chosen was added at the Council meeting and was a compromise. The last four-month period reallocation is unlikely to be used by catcher vessels less than 60 ft (18.3 m) LOA, and is likely to be reallocated to the hook-and-line catcher-processors which previously received any unused jig gear allocations.

Alternative 4, which was part of the preferred alternative along with Alternative 2, splits the BSAI Pacific cod pot allocation between the pot catcher vessel sector and the pot catcher-processor sector on the basis of relative harvests in the years 1998–2001. NMFS chose Alternative 4, Option 3. Three other options would have allocated Pacific cod among the two pot gear sectors in different ways. Each of these other options would have had an adverse impact on one or the other of the two groups.

Further analysis of the impacts of the alternatives on small entities is contained in the FRFA.

## Small Entity Compliance Guide

Section 212 of the Small Business Regulatory Enforcement Fairness Act of 1996 states that, for each rule or group of related rules for which an agency is required to prepare a FRFA, the agency shall publish one or more guides to assist small entities in complying with the rule, and shall designate such publications as ''small entity compliance guides.'' The agency shall explain the actions a small entity is required to take to comply with a rule or group of rules. This final rule serves as the small entity compliance guide. This action does not require any additional compliance from small entities. Copies of this final rule are available from NMFS (see **ADDRESSES**) and at the following website: http://www.fakr.noaa.gov/

## List of Subjects in 50 CFR Part 679

Alaska, Fisheries, Recordkeeping and reporting requirements.

Dated: November 24, 2003.

**Rebecca Lent,**

*Deputy Assistant Administrator for Regulatory Programs, National Marine Fisheries Services.*

■ For reasons set out in the preamble, 50 CFR part 679 is amended as follows:

## PART 679—FISHERIES OF THE EXCLUSIVE ECONOMIC ZONE OFF ALASKA

■ 1. The authority citation for part 679 continues to read as follows:

**Authority:** Authority: 16 U.S.C. 773 *et seq.*, 1801 *et seq.*, and 3631 *et seq.*; Title II of Division C, Pub. L. 105–277; Sec. 3027, Pub L. 106–31, 113 Stat. 57; 16 U.S.C. 1540(f).

■ 2. In § 679.20, paragraphs (a)(7)(i)(C), (a)(7)(ii)(B), (a)(7)(ii)(C), and (a)(7)(iii)(A) are revised to read as follows:

### § 679.20 General limitations.

* * * * *

(a) * * *

(7) * * *

(i) * * *

(C) *Allocations among vessels using hook-and-line or pot gear.* (*1*) The Regional Administrator annually will estimate the amount of Pacific cod taken as incidental catch in directed fisheries for groundfish other than Pacific cod by vessels using hook-and-line or pot gear and deduct that amount from the portion of Pacific cod TAC annually allocated to hook-and-line or pot gear under paragraph (a)(7)(i)(A) of this section. The remainder will be further allocated as directed fishing allowances as follows:

(*i*) 80.0 percent to catcher/processor vessels using hook-and-line gear;

(*ii*) 0.3 percent to catcher vessels using hook-and-line gear;

(*iii*) 3.3 percent to catcher/processor vessels using pot gear;

(iv) 15.0 percent to catcher vessels using pot gear; and

(*v*) 1.4 percent to catcher vessels less than 60 ft (18.3 m) LOA that use either hook-and-line or pot gear.

(*2*) Harvest of Pacific cod by catcher vessels less than 60 ft (18.3 m) LOA using pot gear:

(*i*) Will accrue against the 15 percent specified in paragraph (a)(7)(i)(C)(*1*)(*iv*) of this section when the directed fishery for Pacific cod by catcher vessels equal to or greater than 60 ft (18.3 m) LOA using pot gear is open.

(*ii*) Will accrue against the 1.4 percent specified in paragraph (a)(7)(i)(C)(*1*)(*v*) of this section when the directed fishery for Pacific cod by catcher vessels equal to or greater than 60 ft (18.3 m) LOA using pot gear is closed.

* * * * *

(ii) * * *

(B) *Reallocation among vessels using hook-and-line or pot gear.* If, during a fishing year, the Regional Administrator determines that catcher vessels using hook-and-line gear or vessels less than 60 ft (18.3 m) LOA using hook-and-line or pot gear will not be able to harvest the directed fishing allowance of Pacific cod allocated to those vessels under paragraphs (a)(7)(i)(C)(*1*)(*ii*), (a)(7)(i)(C)(*1*)(*iv*), or (a)(7)(ii)(C)(*1*) of this section, NMFS may reallocate the projected unused amount of Pacific cod as a directed fishing allowance to catcher/processor vessels using hook-and-line gear through notification in the **Federal Register.**

(C) *Reallocation among vessels using trawl or non-trawl gear.* If, during a fishing year, the Regional Administrator determines that vessels using trawl gear, hook-and-line gear, pot gear or jig gear will not be able to harvest the entire amount of Pacific cod in the BSAI allocated to those vessels under paragraphs (a)(7)(i)(A), (a)(7)(i)(B) or (a)(7)(i)(C) of this section, NMFS will reallocate the projected unused amount of Pacific cod to vessels harvesting Pacific cod using the other gear type(s) through notification in the **Federal Register**, subject to the provisions below:

(*1*) *Reallocation of TAC specified for jig gear.* The Regional Administrator will reallocate any projected unused portion of a seasonal allowance of Pacific cod for vessels using jig gear under paragraphs (a)(7)(i)(A) and (a)(7)(iii)(A) of this section to catcher vessels less than 60 ft (18.3 m) LOA using hook-and-line or pot gear.

(*2*) *Reallocation of TAC specified for trawl gear.* The Regional Administrator will reallocate any projected unharvested amounts of Pacific cod

TAC allocated to trawl gear under paragraph (a)(7)(i) of this section: 95 percent to catcher/processor vessels using hook-and-line gear, 0.9 percent to catcher/processor vessels using pot gear, and 4.1 percent to catcher vessels using pot gear.

* * * * *

(iii) * * *

(A) *Seasonal apportionment and gear allocations.* The BSAI Pacific cod gear allocations and apportionments by seasons, as specified in § 679.23 (e)(5), are as follows:

| Gear Type | A season | B season | C season |
|---|---|---|---|
| (*1*) trawl | 60 percent | 20 percent | 20 percent |
| (*i*) trawl CV | 70 percent | 10 percent | 20 percent |
| (*ii*) trawl CP | 50 percent | 30 percent | 20 percent |
| (*2*) hook-and-line processors, hook-and-line ≥60 ft (18.3 m)LOA, and non-CDQ pot vessels ≥60 ft (18.3 m) LOA | 60 percent | 40 percent | |
| (*3*) jig vessels | 40 percent | 20 percent | 40 percent |
| (*4*) all other nontrawl vessels | no seasonal apportionment | no seasonal apportionment | no seasonal apportionment |

* * * * *

■ 3. In § 679.23, paragraph (e)(5)(i) introductory text is revised, and paragraph (e)(5)(iv) is added, to read as follows:

**§ 679.23 Seasons.**

* * * * *

(e) * * *

(5) * * *

(i) *Hook-and-line gear.* Subject to other provisions of this part, directed fishing for CDQ and non-CDQ Pacific cod with vessels equal to or greater than 60 ft (18.3 m) LOA using hook-and-line gear is authorized only during the following two seasons:

* * * * *

(iv) *Jig gear.* Subject to other provisions of this part, directed fishing for CDQ and non-CDQ Pacific cod with jig gear is authorized only during the following three seasons:

(A) *A season.* From 0001 hours, A.l.t., January 1 through 1200 hours, A.l.t., April 30;

(B) *B season.* From 1200 hours, A.l.t., April 30 through 1200 hours, A.l.t., August 31;

(C) *C season.* From 1200 hours, A.l.t., August 31 through 2400 hours, A.l.t., December 31.

* * * * *

[FR Doc. 03–29826 Filed 11–25–03; 4:02 pm]

BILLING CODE 3510–22–S

# Proposed Rules

Federal Register
Vol. 68, No. 230
Monday, December 1, 2003

This section of the FEDERAL REGISTER contains notices to the public of the proposed issuance of rules and regulations. The purpose of these notices is to give interested persons an opportunity to participate in the rule making prior to the adoption of the final rules.

## DEPARTMENT OF HEALTH AND HUMAN SERVICES

### Food and Drug Administration

### 21 CFR Part 17

**[Docket No. 2003N–0308]**

## Civil Money Penalties Hearings; Maximum Penalty Amounts and Compliance With the Federal Civil Penalties Inflation Adjustment Act

**AGENCY:** Food and Drug Administration, HHS.

**ACTION:** Proposed rule.

**SUMMARY:** The Food and Drug Administration (FDA) is proposing a new regulation to adjust for inflation the maximum civil money penalty amounts for the various civil money penalty authorities within our jurisdiction. We are taking this action to comply with the Federal Civil Penalties Inflation Adjustment Act of 1990 (FCPIAA), as amended.

**DATES:** Submit written or electronic comments by February 17, 2004.

**ADDRESSES:** Submit written comments to the Division of Dockets Management (HFA–305), Food and Drug Administration, 5630 Fishers Lane, rm. 1061, Rockville, MD 20852. Submit electronic comments to *http://www.fda.gov/dockets/ecomments*.

**FOR FURTHER INFORMATION CONTACT:** Philip L. Chao, Office of Policy and Planning (HF–23), Food and Drug Administration, 5600 Fishers Lane, Rockville, MD 20857, 301–827–0587.

**SUPPLEMENTARY INFORMATION:**

### I. Why Are We Revising Our Civil Money Penalty Rules?

In general, the FCPIAA (28 U.S.C. 2461, as amended by the Debt Collection Improvement Act of 1996) requires Federal agencies to issue regulations to adjust for inflation each civil monetary penalty provided by law within their jurisdiction. The FCPIAA directs agencies to adjust the civil monetary penalties by October 23, 1996, and to make additional adjustments at least once every 4 years thereafter. The adjustments are based on changes in the cost of living, and the FCPIAA defines the cost of living adjustment as:

* * * the percentage (if any) for each civil monetary penalty by which—

(1) the Consumer Price Index for the month of June of the calendar year preceding the adjustment, exceeds

(2) the Consumer Price Index for the month of June of the calendar year in which the amount of such civil monetary penalty was last set or adjusted pursuant to law.

The FCPIAA also prescribes a rounding method based on the amount of the calculated increases, but states that the initial adjustment of a civil monetary penalty may not exceed 10 percent of the penalty.

The FCPIAA defines a civil monetary penalty as:

* * * any penalty, fine, or other sanction that—

(A)(i) is for a specific monetary amount as provided by Federal law; or

(ii) has a maximum amount provided for by Federal law; and

(B) is assessed or enforced by an agency pursuant to Federal law; and

(C) is assessed or enforced pursuant to an administrative proceeding or a civil action in the Federal Courts * * *.

Congress enacted the FCPIAA, in part, because it found that the impact of civil monetary penalties had been reduced by inflation and that reducing the impact of civil monetary penalties had weakened their deterrent effect.

We have identified 14 civil monetary penalties that fall within our jurisdiction and are subject to adjustments under the FCPIAA. The following table lists those penalties, their maximum penalty amounts, assessment methods, the dates that the penalties were last set or adjusted, and the adjusted penalty amount. The affected civil monetary penalties provisions are sections 303, 307, and 539 of the Federal Food, Drug, and Cosmetic Act (the act) (21 U.S.C. 333, 335b, and 360pp) and sections 354 and 2128 of the Public Health Service Act (PHS Act) (42 U.S.C. 263b and 300aa–28).

TABLE 1.—CIVIL MONETARY PENALTIES AUTHORITIES ADMINISTERED BY FDA AND ADJUSTED MAXIMUM PENALTY AMOUNTS

| U.S.C. Section | Description of Violation | Current Maximum Penalty Amount (in dollars) | Assessment Method | Date of Last Penalty Figure or Adjustment | Adjusted Maximum Penalty Amount (in dollars) |
|---|---|---|---|---|---|
| 21 U.S.C. | | | | | |
| 333(b)(2)(A) | Violation of certain requirements of the Prescription Drug Marketing Act (PDMA) | 50,000 | For each of the first two violations in any 10-year period | 1988 | 55,000 |
| 333(b)(2)(B) | Violation of certain requirements of the PDMA | 1,000,000 | For each violation after the second conviction in any 10-year period | 1988 | 1,100,000 |
| 333(b)(3) | Violation of certain requirements of the PDMA | 100,000 | Per violation | 1988 | 110,000 |
| 333(f)(1)(A) | Violation of certain requirements of the Safe Medical Devices Act (SMDA) | 15,000 | Per violation | 1990 | 15,000 |

TABLE 1.—CIVIL MONETARY PENALTIES AUTHORITIES ADMINISTERED BY FDA AND ADJUSTED MAXIMUM PENALTY AMOUNTS—Continued

| U.S.C. Section | Description of Violation | Current Maximum Penalty Amount (in dollars) | Assessment Method | Date of Last Penalty Figure or Adjustment | Adjusted Maximum Penalty Amount (in dollars) |
|---|---|---|---|---|---|
| 333(f)(1)(A) | Violation of certain requirements of the SMDA | 1,000,000 | For the aggregate of violations | 1990 | 1,100,000 |
| 333(f)(2)(A) | Violation of certain requirements of the Food Quality Protection Act of 1996 (FQPA) | 50,000 | Per individual | 1996 | 55,000 |
| 333(f)(2)(A) | Violation of certain requirements of the FQPA | 250,000 | Per ''any other person'' | 1996 | 275,000 |
| 333(f)(2)(A) | Violation of certain requirements of the FQPA | 500,000 | For all violations adjudicated in a single proceeding | 1996 | 550,000 |
| 335b(a) | Violation of certain requirements of the Generic Drug Enforcement Act of 1992 (GDEA) | 250,000 | Per violation for an individual | 1992 | 275,000 |
| 335b(a) | Violation of certain requirements of the GDEA | 1,000,000 | Per violation for ''any other person'' | 1992 | 1,100,000 |
| 360pp(b)(1) | Violation of certain requirements of the Radiation Control for Health and Safety Act of 1968 (RCHSA) | 1,000 | Per violation per person | 1968 | 1,000 |
| 360pp(b)(1) | Violation of certain requirements of the RCHSA | 300,000 | For any related series of violations | 1968 | 325,000 |
| 42 U.S.C. | | | | | |
| 263b(h)(3) | Violation of certain requirements of the Mammography Quality Standards Act of 1992 and the Mammography Quality Standards Act of 1998 | 10,000 | Per violation | 1992 | 10,000 |
| 300aa–28(b)(1) | Violation of certain requirements of the National Childhood Vaccine Injury Act of 1986 | 100,000 | Per occurrence | 1986 | 110,000 |

In several cases, the adjusted civil monetary penalty was subject to the FCPIAA's provision restricting the initial adjustment to no more than 10 percent of the penalty. In several other cases, the adjusted civil monetary penalty did not change from the current civil monetary penalty.

## II. What Would the Proposed Rule Do?

The proposal would amend our civil money penalties hearing regulations in part 17 (21 CFR part 17) to establish a new § 17.2, entitled ''Maximum Penalty Amounts,'' to show the current maximum civil monetary penalty amounts that were adjusted under the FCPIAA. Proposed § 17.2 would be similar to the table shown in section I of this document, except that the proposal would use a yet-to-be-determined date as the ''Date of Last Penalty Figure or Adjustment'' because that date would reflect a final rule's effective date and, at this time, we cannot predict when we would issue a final rule.

We would revise the table in § 17.2, as required by the FCPIAA, at least once every 4 years.

The proposal would also revise § 17.1 which lists, in part, statutory provisions that authorize civil money penalties that are governed by the civil money penalty regulations. The proposed revision would simply update the statutory citations because some provisions have been renumbered since the last time we amended § 17.1.

We also note that section 351(d)(2) of the PHS Act (42 U.S.C. 262(d)(2)) authorizes a civil monetary penalty for certain violations of the PHS Act. We have omitted section 351(d)(2) of the PHS Act from this proposal because, unlike the other civil monetary penalty provisions, section 351(d)(2) of the PHS Act is self-adjusting so that the maximum civil monetary penalty amount increases annually. Section 351(d)(2) of the PHS Act, when first enacted in 1986, provided for a maximum civil penalty of up to $100,000 per day of violation. By using the adjustment formula prescribed in section 351(d)(2) of the PHS Act, we calculate the adjusted maximum civil penalty amount for section 351(d)(2) of the PHS Act to be $151,637.28 per day of violation.

## III. Environmental Impact

We have determined under 21 CFR 25.30(a) and (h) that this action is of a type that does not individually or cumulatively have a significant effect on the human environment. Therefore, neither an environmental assessment nor an environmental impact statement is required.

## IV. Paperwork Reduction Act 1995

We tentatively conclude that the civil monetary penalties adjustments in this proposed rule are not subject to review

by the Office of Management and Budget because they do not constitute a ''collection of information'' under the Paperwork Reduction Act of 1995 (44 U.S.C. 3501–3520). The adjustments do not require disclosure of any information to FDA, third parties, or the public.

**V. Federalism**

We have analyzed this proposed rule in accordance with the principles set forth in Executive Order 13132. We have determined that the rule does not contain policies that have substantial direct effects on the States, on the relationship between the National Government and the States, or on the distribution of power and responsibilities among the various levels of government. Accordingly, we have concluded that the rule does not contain policies that have federalism implications as defined in the Executive order and, consequently, a federalism summary impact statement is not required.

**VI. Analysis of Impacts**

We have examined the impacts of the proposed rule under Executive Order 12866 and the Regulatory Flexibility Act (5 U.S.C. 601–612), and the Unfunded Mandates Reform Act of 1995 (Public Law 104–4). Executive Order 12866 directs agencies to assess all costs and benefits of available regulatory alternatives and, when regulation is necessary, to select regulatory approaches that maximize net benefits (including potential economic, environmental, public health and safety, and other advantages; distributive impacts; and equity). We believe that this proposed rule is consistent with the regulatory philosophy and principles identified in the Executive order. In addition, the proposed rule is not a significant regulatory action as defined by the Executive order and so is not subject to review under the Executive order.

The Regulatory Flexibility Act requires agencies to analyze regulatory options that would minimize any significant impact of a rule on small entities. Because the proposed rule would simply adjust the maximum amount of civil monetary penalties administered by FDA, and because the adjustment is required by the FCPIAA, we certify that the proposed rule will not have a significant economic impact on a substantial number of small entities. Therefore, under the Regulatory Flexibility Act, no further analysis is required.

**VII. Comments**

Interested persons may submit to the Division of Dockets Management (*see* **ADDRESSES**) written or electronic comments regarding this document. Submit a single copy of electronic comments or two paper copies of any mailed comments, except that individuals may submit one paper copy. Comments are to be identified with the docket number found in brackets in the heading of this document. Received comments may be seen in the Division of Dockets Management between 9 a.m. and 4 p.m., Monday through Friday.

**List of Subjects in 21 CFR Part 17**

Administrative practice and procedure, Penalties.

Therefore, under the Federal Food, Drug, and Cosmetic Act and the Public Health Service Act, and under authority delegated to the Commissioner of Food and Drugs, it is proposed that 21 CFR part 17 be amended as follows:

## PART 17—CIVIL MONEY PENALTIES HEARINGS

1. The authority citation for 21 CFR part 17 continues to read as follows:

**Authority:** 21 U.S.C. 331, 333, 337, 351, 352, 355, 360, 360c, 360f, 360i, 360j, 371; 42 U.S.C. 262, 263b, 300aa–28; 5 U.S.C. 554, 555, 556, 557.

2. Section 17.1 is amended by revising paragraph (a), redesignating paragraphs (d) through (f) as paragraphs (e) through (g), adding new paragraph (d), and revising newly redesignated paragraphs (e), (f), and (g) to read as follows:

**§ 17.1 Scope.**

* * * * *

(a) Section 303(b)(2) and (b)(3) of the Federal Food, Drug, and Cosmetic Act (the act) authorizing civil money penalties for certain violations of the act that relate to prescription drug marketing practices.

* * * * *

(d) Section 539(b)(1) of the act authorizing civil money penalties for certain violations of the act that relate to electronic products.

(e) Section 351(d)(2) of the Public Health Service Act (the PHS Act) authorizing civil money penalties for violations of biologic recall orders.

(f) Section 354(h)(3) of the PHS Act, as amended by the Mammography Quality Standards Act of 1992 and the Mammography Quality Standards Act of 1998, authorizing civil money penalties for failure to obtain a certificate and failure to comply with established standards, among other things.

(g) Section 2128(b)(1) of the PHS Act authorizing civil money penalties for intentionally destroying, altering, falsifying, or concealing any record or report required to be prepared, maintained, or submitted by vaccine manufacturers under section 2128 of the PHS Act.

3. Section 17.2 is added to read as follows:

**§ 17.2 Maximum penalty amounts.**

The following table shows maximum civil monetary penalties associated with the statutory provisions authorizing civil monetary penalties under the Federal Food, Drug, and Cosmetic Act or the Public Health Service Act.

CIVIL MONETARY PENALTIES AUTHORITIES ADMINISTERED BY FDA AND ADJUSTED MAXIMUM PENALTY AMOUNTS

| U.S.C. Section | Description of Violation | Current Maximum Penalty Amount (in dollars) | Assessment Method | Date of Last Penalty Figure or Adjustment[1] | Adjusted Maximum Penalty Amount (in dollars) |
|---|---|---|---|---|---|
| (a) 21 U.S.C. | | | | | |
| (1) 333(b)(2)(A) | Violation of certain requirements of the Prescription Drug Marketing Act (PDMA) | 50,000 | For each of the first two violations in any 10-year period | ---- | 55,000 |
| (2) 333(b)(2)(B) | Violation of certain requirements of the PDMA | 1,000,000 | For each violation after the second conviction in any 10-year period | ---- | 1,100,000 |

CIVIL MONETARY PENALTIES AUTHORITIES ADMINISTERED BY FDA AND ADJUSTED MAXIMUM PENALTY AMOUNTS—Continued

| U.S.C. Section | Description of Violation | Current Maximum Penalty Amount (in dollars) | Assessment Method | Date of Last Penalty Figure or Adjustment[1] | Adjusted Maximum Penalty Amount (in dollars) |
|---|---|---|---|---|---|
| (3) 333(b)(3) | Violation of certain requirements of the PDMA | 100,000 | Per violation | ---- | 110,000 |
| (4) 333(f)(1)(A) | Violation of certain requirements of the Safe Medical Devices Act (SMDA) | 15,000 | Per violation | ---- | 15,000 |
| (5) 333(f)(1)(A) | Violation of certain requirements of the SMDA | 1,000,000 | For the aggregate of violations | ---- | 1,100,000 |
| (6) 333(f)(2)(A) | Violation of certain requirements of the Food Quality Protection Act of 1996 (FQPA) | 50,000 | Per individual | ---- | 55,000 |
| (7) 333(f)(2)(A) | Violation of certain requirements of the FQPA | 250,000 | Per ''any other person'' | ---- | 275,000 |
| (8) 333(f)(2)(A) | Violation of certain requirements of the FQPA | 500,000 | For all violations adjudicated in a single proceeding | ---- | 550,000 |
| (9) 335b(a) | Violation of certain requirements of the Generic Drug Enforcement Act of 1992 (GDEA) | 250,000 | Per violation for an individual | ---- | 275,000 |
| (10) 335b(a) | Violation of certain requirements of the GDEA | 1,000,000 | Per violation for ''any other person'' | ---- | 1,100,000 |
| (11) 360pp(b)(1) | Violation of certain requirements of the Radiation Control for Health and Safety Act of 1968 (RCHSA) | 1,000 | Per violation per person | ---- | 1,000 |
| (12) 360pp(b)(1) | Violation of certain requirements of the RCHSA | 300,000 | For any related series of violations | ---- | 325,000 |
| (b) 42 U.S.C. | | | | | |
| (1) 263b(h)(3) | Violation of certain requirements of the Mammography Quality Standards Act of 1992 and the Mammography Quality Standards Act of 1998 | 10,000 | Per violation | ---- | 10,000 |
| (2) 300aa–28(b)(1) | Violation of certain requirements of the National Childhood Vaccine Injury Act of 1986 | 100,000 | Per occurrence | ---- | 110,000 |

[1] Dates to-be-determined by the effective date of a final rule.

Dated: October 11, 2003.

**Jeffrey Shuren,**

*Assistant Commissioner for Policy.*

[FR Doc. 03–29741 Filed 11–28–03; 8:45 am]

BILLING CODE 4160–01–S

**DEPARTMENT OF HEALTH AND HUMAN SERVICES**

**Food and Drug Administration**

**21 CFR Part 872**

**[Docket No. 2003N–0390]**

## Dental Devices; Gold Based Alloys, Precious Metal Alloys, and Base Metal Alloys; Designation of Special Controls

**AGENCY:** Food and Drug Administration, HHS.

**ACTION:** Proposed rule.

**SUMMARY:** The Food and Drug Administration (FDA) is proposing to amend the classification regulations of gold-based alloys and precious metal alloys for clinical use and base metal alloy devices. FDA is also proposing to exempt these devices from premarket notification and designate a special control for these devices. The agency is taking this action on its own initiative. This action is being taken under the Federal Food, Drug, and Cosmetic Act (the act), as amended by the Safe Medical Devices Act of 1990 (SMDA), and the Food and Drug Administration Modernization Act of 1997 (FDAMA). Elsewhere in this issue of the **Federal Register**, FDA is announcing the availability of guidance documents that would serve as special controls for these devices.

**DATES:** Submit written or electronic comments by March 1, 2004. See section X of this document for the proposed effective date of a final rule based on this document.

**ADDRESSES:** Submit written comments to the Division of Dockets Management (HFA–305), Food and Drug Administration, 5630 Fishers Lane, rm. 1061, Rockville, MD 20852. Submit electronic comments to *http://www.fda.gov.dockets/ecomments*.

**FOR FURTHER INFORMATION CONTACT:** Michael E. Adjodha, Center for Devices and Radiological Health (HFZ–480), Food and Drug Administration, 9200 Corporate Blvd., Rockville, MD 20850, 301–827–5283, ext. 123, mea@cdrh.fda.gov.

**SUPPLEMENTARY INFORMATION:**

## I. Background (Regulatory Authorities)

The act (21 U.S.C. 301 *et seq.*), as amended by the Medical Devices Amendments of 1976 (the 1976 amendments) (Public Law 94–295), the SMDA (Public Law 101–629), and FDAMA (Public Law 105–115), established a comprehensive system for the regulation of medical devices intended for human use. Section 513 of the act (21 U.S.C. 360c) established three categories (classes) of devices, depending on the regulatory controls needed to provide reasonable assurance of their safety and effectiveness. The three categories of devices are as follows:

- Class I (general controls),
- Class II (special controls), and
- Class III (premarket approval).

Under section 513 of the act, FDA refers to devices that were in commercial distribution before May 28, 1976 (the date of enactment of the 1976 amendments), as preamendments devices. Under the 1976 amendments, class II devices are identified as those devices in which general controls by themselves are insufficient to provide reasonable assurance of safety and effectiveness of the device, but for which there is sufficient information to establish a performance standard to provide such assurance.

The SMDA broadened the definition of class II devices to include those devices for which general controls would not provide reasonable assurance of the safety and effectiveness, but for which there is sufficient information to establish special controls to provide such assurance. The special controls include performance standards, postmarket surveillance, patient registries, development and dissemination of guidelines, recommendations, and any other appropriate actions the agency deems necessary to provide such assurance. See section 513(a)(1)(B) of the act.

FDAMA added, among other sections, a new section 510(m) to the act (21 U.S.C. 360(m)). Under new section 510(m) of the act, FDA may exempt a class II device from premarket notification requirements (510(k)) (21 U.S.C. 360(k)), if the agency determines that premarket notification is not necessary to assure the safety and effectiveness of the device.

## II. Regulatory History of the Devices

In the **Federal Register** of August 12, 1987 (52 FR 30082), FDA issued a final rule classifying 42 dental devices into class II, including gold-based alloys and precious metal alloys for clinical use and base metal alloy under the 1976 amendments.

## III. Proposed Rule

FDA is proposing to amend the classification regulation of gold-based alloys and precious metal alloys for clinical use and base metal alloy devices in order to designate a special control for these devices. These devices were classified before the provisions of the SMDA broadened the definition of class II devices to establish special controls beyond performance standards and before the SMDA regulations became effective. Therefore, designating device-specific guidance as a means to provide reasonable assurance of the safe and effectiveness of the device was not a regulatory option at the time. Since the classification, FDA has not developed a performance standard for these devices.

FDA has now developed guidance documents for these devices and, under the SMDA provisions, is proposing to designate the special controls the agency believes will reasonably assure the safety and effectiveness of these devices. FDA is identifying the guidance documents entitled ''Class II Special Controls Guidance Document: Dental Precious Metal Alloys'' and ''Class II Special Controls Guidance Document: Dental Base Metal Alloys'' as the proposed special control for precious metal alloys (including gold based) and base metal alloys, respectively. Following the effective date of any final classification rule based on this proposed rule, any firm claiming exemption from the premarket notification requirements for a dental precious metal or base metal alloy covered by the rule will need to address the issues covered in the appropriate special controls guidance. However, the firm need only show that its device meets the recommendations of the guidance or in some other way provides equivalent assurances of safety and effectiveness.

Under section 510(m)(1) of the act, FDA is also proposing to exempt these devices from premarket notification. The agency has determined that a 510(k) is not necessary to assure the safety and effectiveness of these devices.

## IV. Risks to Health

FDA has identified the following risks to health associated with these devices: Device failure, adverse tissue reaction, and improper use.

### *A. Device Failure*

The mechanical properties of precious and base metal casting alloys, and solders and porcelain-fused-to-metal (PFM) alloys may be insufficient to support the required loads and lead to device failure. Some alloy compositions used in base metal casting alloys and solders, may be susceptible to corrosion, which can lead to device failure. Porcelain in PFM alloys may deform, crack, and debond from the metal because of incompatibilities leading to device failure. Device failure will result in ineffective treatment, revision, and possibly minor, temporary impairment for the patient.

### *B. Adverse Tissue Reaction*

Some alloy compositions, especially those containing nickel, as pertaining to base metal casting alloys and solders, may not be biocompatible. Poor biocompatibility may result in adverse tissue reaction.

### *C. Improper Use*

Inadequate labeling may result in improper use. Improper use may result in ineffective treatment and may cause minor temporary impairment for the patient.

## V. Special Controls

FDA believes that, in addition to general controls, the class II special controls guidance documents entitled ''Class II Special Controls Guidance: Dental Precious Metal Alloys'' and ''Class II Special Controls Guidance Document: Dental Base Metal Alloys'' are adequate controls to address the risks to health described in section IV of this document. The class II special controls guidance documents provide information on how to control the risks to health of device failure, adverse tissue reaction, and improper use, by identifying FDA-recognized consensus standards and labeling that wil mitigate risks to health included in the guidances.

The consensus standards provide minimum mechanical properties to

address the risks of device failure. Adherence to the recommended standards can mitigate the risk of device failure, e.g., PFM deforming, cracking, or debonding because of biocompatibility.

Another consensus standard identified in the special controls guidance recommends biocompatibility testing. Adherence to this standard can mitigate the risk of adverse tissue reaction by ensuring that the device materials are sufficiently biocompatible for use as permanent implants.

The labeling information provided in the guidance documents addresses the risk of improper use by recommending that manufacturers, in addition to complying with the general labeling provisions of 21 CFR part 801, include indications for use and contraindications for individuals with nickel hypersensitivity in their labeling.

FDA believes that premarket notification is not necessary to provide reasonable assurance of the safety and effectiveness of these devices and, therefore, is giving notice of its intent to exempt the devices from that requirement if the recommendations of the special controls guidance are met.

Elsewhere in this issue of the **Federal Register**, FDA is publishing a notice of availability of the draft guidance documents that would serve as the special controls for these devices.

## VI. Environmental Impact

The agency has determined under 21 CFR 25.34(b) that this action is of a type that does not individually or cumulatively have a significant effect on the human environment. Therefore, neither an environmental assessment nor an environmental impact statement is required.

## VII. Analysis of Impacts

FDA has examined the impacts of the proposed rule under Executive Order 12866, the Regulatory Flexibility Act (5 U.S.C. 601–612), and the Unfunded Mandates Reform Act of 1995 (2 U.S.C. 1501 *et seq.*). Executive Order 12866 directs agencies to assess all costs and benefits of available regulatory alternatives and, when regulation is necessary, to select regulatory approaches that maximize net benefits (including potential economic, environmental, public health and safety, and other advantages; distributive impacts; and equity). The agency believes that this proposed rule is consistent with the regulatory philosophy and principles identified in the Executive order. In addition, the proposed rule is not a significant regulatory action as defined by the Executive order and so is not subject to review under the Executive order.

The Regulatory Flexibility Act requires agencies to analyze regulatory options that would minimize any significant impact of a rule on small entities. The purpose of this proposed rule is to designate a special control for these devices. FDA has designated guidance documents as the special controls. FDA believes that manufacturers, including small manufacturers, are already substantially in compliance with the recommendations in the guidance documents and they will not add substantially to the information manufacturers presently submit. FDA, therefore, believes that the rule will impose no significant economic impact on any small entities. The agency, therefore, certifies that this proposed rule will not have a significant economic impact on a substantial number of small entities. In addition, this proposed rule will not impose costs of $100 million or more on either the private sector or State, local, and tribal governments in the aggregate and, therefore, a summary statement or analysis under section 202(a) of the Unfunded Mandates Reform Act of 1995 is not required.

## VIII. Paperwork Reduction Act of 1995

This proposed rule contains no collections of information. Therefore, clearance by the Office of Management and Budget under the Paperwork Reduction Act of 1995 (44 U.S.C. 3501–3520) is not required.

## IX. Submission of Comments

Interested persons may submit to the Dockets Management Branch (see **ADDRESSES**) written or electronic comments regarding this proposed rule. Submit a single copy of electronic comments to *http://www.fda.gov/dockets/ecomments* or two paper copies of any written comments, except that individuals may submit one paper copy. Comments are to be identified with the docket number found in brackets in the heading of this document. Received comments may be seen in the Division of Dockets Management between 9 a.m. and 4 p.m., Monday through Friday.

## X. Proposed Implementation Plan

FDA proposes that any final regulation that may issue based on this proposal become effective 30 days after its date of publication in the **Federal Register**. Following the effective date of a final rule exempting the device, manufacturers of dental precious metal alloy and base metal alloy devices will need to address the issues covered in these special controls guidances. However, the manufacturer need only show that its device meets the recommendations of the guidance or in some other way provides equivalent assurances of safety and effectiveness. If manufacturers cannot comply with these recommendations or equivalent measures, they will not be exempt from the requirements of premarket notification and will need to submit a premarket notification and receive clearance for their device prior to marketing.

## List of Subjects in 21 CFR Part 872

Medical devices.

Therefore, under the Federal Food, Drug, and Cosmetic Act and under authority delegated to the Commissioner of Food and Drugs, it is proposed that 21 CFR part 872 be amended as follows:

## PART 872—DENTAL DEVICES

1. The authority citation for 21 CFR part 872 continues to read as follows:

**Authority:** 21 U.S.C. 351, 360, 360c, 360e, 360j, 371.

2. Section 872.1 is amended by revising paragraph (e) to read as follows:

### § 872.1 Scope.

* * * * *

(e) Guidance documents in this part may be obtained on the Internet at *http://www.fda.gov/cdrh/guidance.html*.

3. Section 872.3060 is amended by revising paragraph (b) to read as follows:

### § 872.3060 Gold-based alloys and precious metal alloys for clinical use.

* * * * *

(b) *Classification*. Class II (special controls). The special control for these devices is FDA's ''Class II Special Controls Guidance Document: Dental Precious Metal Alloys.'' The devices are exempt from the premarket notification procedures in subpart E of part 807 of this chapter subject to the limitations in § 872.9. (See § 872.1(e) for availability of guidance information.)

4. Section 872.3710 is amended by revising paragraph (b) to read as follows:

### § 872.3710 Base metal alloy.

* * * * *

(b) *Classification*. Class II (special controls). The special control for this device is FDA's ''Class II Special Controls Guidance Document: Dental Base Metal Alloys.'' The device is exempt from the premarket notification procedures in subpart E of part 807 of this chapter subject to the limitations in § 872.9. (See § 872.1(e) for availability of guidance information.)

Dated: October 2, 2003.

**Linda S. Kahan,**

*Deputy Director, Center for Devices and Radiological Health.*

[FR Doc. 03–29739 Filed 11–28–03; 8:45 am]

**BILLING CODE 4160–01–S**

## DEPARTMENT OF THE TREASURY

## 31 CFR Part 50

**RIN 1505–AB07**

## Terrorism Risk Insurance Program; Initial Claims Procedures

**AGENCY:** Departmental Offices, Treasury.

**ACTION:** Notice of proposed rulemaking.

**SUMMARY:** The Department of the Treasury (Treasury) is issuing this proposed rule as part of its implementation of Title I of the Terrorism Risk Insurance Act of 2002 (the Act). That Act established a temporary Terrorism Risk Insurance Program (Program) under which the Federal Government will share the risk of insured loss from certified acts of terrorism with commercial property and casualty insurers until the Program sunsets on December 31, 2005. This proposed rule contains procedures for filing claims for payment of the federal share of compensation for insured losses under the Program and incorporates statutory conditions for federal payment. In particular, the proposed rule addresses requirements for loss certification and associated recordkeeping requirements; provides guidance on what is payable as the federal share of insured losses; and sets forth requirements for investigating and auditing claims under the Program. The rule generally builds upon previous interim guidances and final rules issued by Treasury, particularly in areas involving definitions and disclosure requirements. This proposed rule is the fourth in a series of regulations Treasury has issued to implement the Act.

**DATES:** Written comments may be submitted on or before December 31, 2003.

**ADDRESSES:** Submit comments by e-mail to *triacomments@do.treas.gov* or by mail (if hard copy, preferably an original and two copies) to: Terrorism Risk Insurance Program, Public Comment Record, Suite 2100, Department of the Treasury, 1425 New York Ave., NW., Washington, DC 20220. All comments should be captioned with ''Proposed Rule on Claim Procedures''. Please include your name, affiliation, address, e-mail address and telephone number in your comment. Comments will be available for public inspection by appointment only at the Reading Room of the Treasury Library. To make appointments, call (202) 622–0990 (not a toll-free number).

**FOR FURTHER INFORMATION CONTACT:** David Brummond, Legal Counsel; Howard Leikin, Senior Insurance Advisor; C. Christopher Ledoux, Senior Attorney; Terrorism Risk Insurance Program (202) 622–6770 (not a toll-free number).

**SUPPLEMENTARY INFORMATION:**

### I. Background

On November 26, 2002, the President signed into law the Terrorism Risk Insurance Act of 2002 (Pub. L. 107–297, 116 Stat. 2322) (the Act). The Act was effective immediately. The Act's purposes are to address market disruptions, ensure the continued widespread availability and affordability of commercial property and casualty insurance for terrorism risk, and to allow for a transition period for the private markets to stabilize and build capacity while preserving State insurance regulation and consumer protections.

Title I of the Act establishes a temporary federal program of shared public and private compensation for insured commercial property and casualty losses resulting from an act of terrorism which, as defined by the Act, is certified by the Secretary of the Treasury, in concurrence with the Secretary of State and the Attorney General. The Act authorizes Treasury to administer and implement the Terrorism Risk Insurance Program (the Program), including the issuance of regulations and procedures. The Program provides a three-year federal reinsurance backstop for insured losses from an act of terrorism until the Program ends on December 31, 2005.

Each entity that meets the Act's definition of insurer (well over 2000 firms) must participate in the Program. The amount of federal payment for an insured loss resulting from an act of terrorism is to be determined, based upon the insurance company deductibles and excess loss sharing with the Federal Government, as specified by the Act and the implementing regulations. An insurer's deductible increases each year of the Program, thereby reducing the Federal Government's share of compensation for insured losses each year until the Program expires. An insurer's deductible is calculated based on the value of direct earned premiums collected over certain statutory periods. Once an insurer has met its individual deductible, the federal payments cover 90 percent of the insured losses above the deductible, subject to an industry-aggregate limit of $100 billion.

The Act gives Treasury authority to recoup federal payments made under the Program through policyholder surcharges, up to a maximum annual limit. The Act reduces the Federal share of compensation for insured losses that have been covered under any other federal program. The Act also contains provisions designed to manage litigation arising from or relating to a certified act of terrorism. Section 107 of the Act creates an exclusive federal cause of action, provides for claims consolidation in federal court, and contains a prohibition on federal payments for punitive damages under the Program. The Act provides the United States with the right of subrogation with respect to any payment or claim paid by the United States under the Program.

### II. Previous Rulemaking

This proposed rule is the latest in a series of rules issued by Treasury under the Act. In implementing the Program, Treasury has sought to achieve several goals. First, an effort has been made to implement the Act in a transparent and effective manner that treats comparably those insurers required to participate in the Program and that provides necessary information to policyholders in a useful and efficient manner. Second, Treasury seeks to rely as much as possible on the State insurance regulatory structure. In that regard, Treasury is closely coordinating with the National Association of Insurance Commissioners (NAIC) in implementing all aspects of the Program. Third, to the extent possible within statutory constraints, Treasury seeks to allow insurers to participate in the Program in a manner consistent with their normal course of business. Finally, given the temporary and transitional nature of the Program, Treasury is guided by the Act's goal for insurers to develop their own capacity, resources and mechanisms for terrorism risk insurance coverage when the Program expires.

To assist insurers, policyholders and other interested parties in complying with immediately applicable and time-sensitive requirements of the Act prior to the issuance of regulations, Treasury issued interim guidance in four separate notices on December 3 and 18, 2002 and on January 22 and March 25, 2003. Treasury publicly released these interim guidance notices on its Program Web site *http://www.Treasury.gov/trip* and published each notice in the **Federal Register** [67 FR 76206 (December 11,

2002); 67 FR 78864 (Dec. 18, 2002); 68 FR 4544 (Jan. 29, 2003); 68 FR 15039 (Mar. 27, 2003)]. The interim guidances addressed several issues requiring clarification of immediately applicable provisions, including provisions dealing with statutory disclosure obligations of insurers; requirements to make available terrorism risk insurance; the meaning of direct earned premium for commercial property and casualty insurance; categories of insurers required to participate in the Program; and the scope of the term insured loss under the Act.

In addition to interim guidance, Treasury has published two interim final rules and a proposed rule that have now been issued as final rules. Treasury published the first regulation implementing the Act on February 28, 2003 (68 FR 9804) as an interim final rule. That interim final rule was revised and published as a final regulation on July 11, 2003 (68 FR 41250). Now Subpart A of part 50 in Title 31 of the Code of Federal Regulations, this rulemaking covers the purpose and scope of the Program, key definitions and certain general provisions. A technical revision to the final rule dealing with the definition of direct earned premium was subsequently published on August 13, 2003 (68 FR 48280).

On April 18, 2002 (68 FR 19302) Treasury published a second interim final rule. Among other things, this rule dealt with requirements governing disclosures that insurers must make to policyholders as a condition for federal payment under the Act and requirements that insurers make available terrorism coverage in their commercial property and casualty insurance policies. The interim final rule created new Subparts B and C of 31 CFR part 50. The interim final rule was revised and published as a final rule on October 17, 2003 (68 FR 59720).

Finally, Treasury published a proposed rule on April 18, 2003 to address issues involving State residual market insurance entities and State workers compensation funds as required by section 103(d)(1) of the Act (68 FR 19309). The proposed rule clarified characteristics of a residual market mechanism that define it as an ''insurer'', established guidelines for computing ''direct earned premium'' and continued the waiver of the Act's requirements related to disclosure. The proposed rule was revised and published as a final rule on October 17, 2003 (68 FR 59715). The final rule made minor revisions to the proposed rule and set forth disclosure requirements for residual market mechanisms.

## III. The Proposed Rule

This proposed rule would add Subparts F and G to Part 50, which comprises Treasury's regulations implementing the Act. It also proposes to amend the definition of ''insured loss'' in § 50.5(e) of Subpart A.

### *A. Overview*

Section 103(a)(2) of the Act requires the Secretary of the Treasury to administer the Program and pay the Federal share of compensation for insured losses. The proposed rule would establish requirements for insurers to follow in obtaining payment of the Federal share of compensation for insured losses from a terrorist event. The proposed rule is designed to reflect best practices of reinsurers, where applicable, in the context of the Act's text, goals and purposes. In general, the proposed rule describes what is payable to insurers as the Federal share of compensation and then follows the sequence of the process for paying reinsurance claims. Essentially, the process involves gathering information about insured losses of insurers as defined by the Act; requiring proof, or certification, that an insurer has met the requirements of the Act as a condition to payment of the Federal share; and making payment to insurers for the Federal share of compensation for their insured losses. The proposed rule is modeled on customary business practices and procedures of the reinsurance industry while implementing the statutory requirements of the Act. Treasury seeks comment on all aspects of the proposed rule from interested persons and entities.

In outlining proposed requirements for insurers to obtain payment for insured losses, Treasury seeks to establish operational procedures that emulate, as appropriate, the best practices of a reinsurer. In this proposed rule, Treasury's goal is to be able to respond quickly to insurer claims for payment while maintaining appropriate financial controls so that taxpayer funds are protected. To the extent possible, the information that will be required from insurers already exists as part of their current process for administering and managing insurance claims. In certain instances, however, the Act requires certifications of insurer actions that may be different from customary industry business practices. It is Treasury's objective to obtain the information and documentation needed to administer the Program, while avoiding undue burdens on insurers.

The proposed rule seeks to clarify the amount of the Federal share of compensation payable by Treasury and establish certain basic operational requirements to implement payment. Accordingly, the previous definition of ''insured loss'' is amended to facilitate clarification of items compensable as part of the Federal share. In addition to this proposed rulemaking, more detailed operating procedures will be developed as required. Such procedures will be posted on the Treasury Web site *http://www.Treasury.gov/trip.* For the present time, Treasury is concentrating on regulations that are important to the initial and supplementary reporting and certification of insured losses and the filing of claims for payment of the Federal share of compensation. This is being done so that Treasury and insurers can proceed expeditiously should a certified act of terrorism occur. There are other issues, typically those arising at later stages of the claims payment process, that are not addressed in the proposed rule. For example, payment priorities when aggregate losses constituting the Federal share of compensation approach the statutory maximum of $100 billion are not included as part of this rulemaking. These and other issues will be the subject of subsequent rulemaking.

### *B. Description of Proposed Rule*

The major provisions of the proposed rule are as follows:

1. *The Federal Share of Compensation.* The proposed rule generally outlines the Act's requirements and conditions for federal payment. A critical component of the calculation of the Federal share of compensation is the amount of insured losses of an insurer. The proposed rule thus clarifies elements of insured losses that are compensable by amending the current definition of ''insured loss'' in § 50.5(e). Following customary business practices in the insurance industry, Treasury is proposing that loss adjustment expenses allocable to a specific underlying loss be payable as part of insured losses. Treasury has not included losses in excess of policy limits (known commonly as XPL) as insured losses. However, comments on why the Federal Government should consider including XPL losses are solicited by Treasury. Since the Act specifically excludes compensation for punitive or exemplary damages, these are also not included as insured loss items.

The Federal share of compensation payable to an insurer under the Program is described by the proposed rule as 90 percent of that portion of the insurer's

insured losses that exceed its insurer deductible during a Program Year, subject to specified adjustments and the cap of $100 billion as provided in the Act. The proposed rule stipulates several adjustments in calculating the Federal share of compensation. First, the proposed rule reduces aggregate insured losses by amounts recovered by insurers for salvage and subrogation. Treasury expects that as normal good business practice, insurers will pursue salvage and subrogation recoveries. The proposed rule sets forth that the amount of insured losses upon which the Federal share of compensation is calculated be reduced by such recoveries. The benefits of insurer recoveries for salvage and subrogation thus inure to both the insurer and to the Program.

The proposed rule also specifies two other adjustments that will be made to reduce the Federal share of compensation otherwise due for the insured losses. The Act requires that the Federal share of compensation for insured losses be reduced by any duplicate amount of compensation otherwise provided by the Federal Government for those insured losses. The Act recognizes that insurers may have other sources of recovery for their insured losses, particularly reinsurance agreements. Should the amount of an insurer's Federal share of compensation from the Program and the amount of recoveries from other sources exceed the aggregate amount of its insured losses in a Program Year, then any excess recovery must be returned to Treasury. Excluded from this requirement are recoveries from a reinsurer pursuant to an agreement whereby an insurer's obligation to repay its reinsurer takes priority over its obligation to repay Treasury.

2. *Information Gathering.* The next stage of the claims process under the proposed rule involves the submission of information about insured losses so that Treasury can determine the extent of its obligation to pay individual insurers under the Act.

a. *Initial Notice.* As the ''payer'' of Federal compensation for insured losses from acts of terrorism, Treasury is proposing an early notification requirement when an insurer obtains information indicating its insured losses will exceed 50% of its insurer deductible as defined by the Act. At that time Treasury expects the insurer to submit, on a form prescribed by Treasury, estimates of aggregate losses for the Program Year, its insurer deductible and the Federal share of aggregate losses, as well as to designate the person who will make required certifications and receive Federal payments. Such information will assist in anticipating funding and operational requirements. Because the insurer deductible applies collectively to all insurers in an affiliated group, the notice must include the designation of a single insurance entity to coordinate the submission of required reports and documentation (including the Initial Notice), make required certifications and receive Federal payments on behalf of the affiliated group.

b. *Loss Reporting.* The proposed rule addresses the type of loss information that will be required to document insured losses when an insurer seeks reimbursement from Treasury for the Federal share of compensation. An Initial Certification of Loss, on a form prescribed by Treasury, is required when insured losses first exceed the insurer's deductible. If the insurer sustains ongoing, additional insured losses, periodic Supplementary Certifications of Loss, on a form prescribed by Treasury, must be submitted. These Certifications of Loss will be used by Treasury to assess payment eligibility for the Federal share of compensation and compliance with the Act's prerequisites for payment.

(i) *Loss Bordereau.* The primary vehicle for gathering information about the insured losses of an insurer is a summary report of loss data commonly known in the reinsurance industry as a ''bordereau''. A bordereau is a management report of basic information about an insurer's underlying claims that, in the aggregate, constitute the insured losses of the insurer. The bordereau is used within the reinsurance industry to track insured losses and otherwise establish the reinsurer's obligation to pay under a reinsurance agreement. The proposed rule would require insurers to provide Treasury with a bordereau that identifies insured losses by Program Year, by industry catastrophe code and by line of business. If an industry catastrophe code is not issued, Treasury will issue a code for insurer use. It is Treasury's intent to coordinate this code with appropriate industry reporting organizations.

In the future, Treasury will issue operating procedures and a prescribed format for the bordereau in its implementation of these regulations. For each underlying claim, Treasury contemplates the submission of information that is typical of a reinsurer's requirements. Such basic information will allow Treasury to expeditiously handle and provide payment for claims under the Program. Certain data will be sought for claim identification and coverage determination, such as claim number, insured name, state code for the location of the loss, date of loss, policy effective date and length of term. Other data will assist in the assessment of the insurer's claim, such as policy limits. And finally, certain data are simply basic to the insurer's claim, such as the loss and allocated loss adjustment expenses paid, amounts reserved for those expenses and amounts recovered through salvage and subrogation.

(ii) *Other Information.* The forms to be prescribed by Treasury will also seek loss-related information that is required by specific provisions of the Act. As previously noted, section 103(g)(2) of the Act recognizes that insurers may have other reinsurance recoveries for their insured losses. However, the Act requires that the Federal share of compensation from Treasury and amounts recovered from other sources cannot exceed the aggregate amount of the insurer's insured losses in any Program Year. Thus, Treasury will require insurers to indicate on the bordereau whether an underlying claim could or does have other reinsurance recoverable. As part of the loss certification and bordereau information reported, an insurer would also report total reinsurance recoveries from other sources. This will provide the Treasury with an early notification that other reinsurance exists.

Section 107(a)(5) of the Act provides that punitive damage amounts may not be included as insured losses. Thus, Treasury will require such amounts to be reported with an underlying claim on the bordereau for appropriate adjustment of the amount claimed from the Program.

Finally, section 103(e)(1)(B) of the Act requires the reduction of the Federal share of compensation for insured losses under the Program by the amounts provided by the Federal Government through any other program for those same losses. Accordingly, insurers will be required to inquire of each of their claimants whether or not the claimant received any duplicate recovery from any other Federal source and to report that amount on the bordereau with the underlying claim.

3. *Compliance Certifications.* The proposed rule also addresses various written certifications the Act requires as a condition for payment of the Federal share. Specific statements certifying actions by the insurer as required by the Act will be included as part of each Certification of Loss. Section 103(b)(2) of the Act states that no payment may be made to an insurer for a covered insured loss unless ''the insurer

provides clear and conspicuous disclosure to the policyholder of the premium charged for insured losses covered by the Program and the Federal share of compensation for insured losses under the Program.'' This requirement has been addressed in the previously issued Treasury regulations at §§ 50.10 through 50.19 and will be a formal requirement in submitting a claim for the Federal share of compensation for an insured loss. Treasury anticipates that an executive officer of the insurer will provide this written certification for all underlying claims submitted on the bordereau, both with the Initial Certification of Loss and with any Supplementary Certifications of Loss.

Section 103(c) of the Act also requires that through December 31, 2004, an entity meeting the definition of an insurer under this Program ''(A) shall make available, in all of its commercial property and casualty insurance policies, coverage for insured losses; and (B) shall make available property and casualty insurance coverage for insured losses that does not differ materially from the terms, amounts, and other coverage limitations applicable to losses arising from events other than acts of terrorism''. This requirement has also been addressed in the previously issued Treasury regulations at §§ 50.20 through 50.24. The Initial and each Supplementary Certification of Loss will include a certification that this availability requirement has been met. Although this is not a statutory condition for payment, Treasury believes it is necessary to effectively administer and implement the Program.

Finally, the Act requires that insurers absorb a specified level of insured losses, or an insurer deductible, before receiving reimbursement for the Federal share of compensation for insured losses. To facilitate the administration of this provision, the Initial Certification of Loss requires an insurer to certify the amount of its direct earned premium, along with the calculation of its insurer deductible. The proposed rule provides that, at the option of the insurer, this statement and supporting documentation can be submitted along with the Initial Notice of Insured Loss instead of being provided in conjunction with the Initial Certification of Loss. This is allowed so that the amount of the insurer's deductible can be on file with the Program to expedite the processing of the insurer's Initial Certification of Loss. Treasury will prescribe a schedule or attachment to the Initial Notice of Insured Loss and the Initial Certification of Loss forms for the calculation and certification by an insurer of its direct earned premium and resulting insurer deductible based on its reporting to the NAIC, or as otherwise appropriately reported.

4. *Paying the Federal Share.* The final stage in the claim process addressed by Treasury in the proposed rule is to make payment as provided by the Act. Once again, the proposed rule generally follows payment practices and procedures used in the reinsurance industry.

a. *Payment Process.* Treasury is proposing that it will, upon receiving the required documentation, promptly provide payment. If Treasury makes payments before the total amount of insured losses are known, such payments will be subject later to adjustment based on any overpayment or underpayment. If the total amount of insured losses to be paid by the insurer or the amount of Federal compensation payable by Treasury has not been finally determined when the Initial Certification of Loss has been filed, the normal procedure to be followed is that the insurer will file Supplementary Certifications of Loss on a monthly basis. If monthly reporting is inappropriate in a particular case, then Treasury may determine a more suitable schedule to be worked out with the insurer. In either situation, on the basis of each Supplementary Certification of Loss thereafter, Treasury or the insurer, as the case may be, shall pay the balance due. It is proposed that any overpayment to an insurer will either be offset from future payments or due to Treasury within 45 days of the reporting of the overpayment.

Because the Act requires insurance entities within an affiliated group to be treated as a single entity in determining the insurer deductible, Treasury is proposing that all payments will be made to a single insurance entity within an affiliated group. This entity will be identified by the affiliated group and designated on the Initial Notice of Loss. The proposed rule also requires that insurers within the affiliated group assign their rights to payment from Treasury to the single insurance entity. Failure to make such assignment may be grounds for Treasury withholding an affiliate insurer's share of Federal compensation under the Program.

b. *Audits and Records.* If a certified act of terrorism occurs, it will be the objective of the Treasury to reimburse insurers according to the Act as soon as possible following receipt of the Initial Certification of Loss and supporting documentation. The proposed rule requires insurers to retain all records and files pertaining to the handling and settlement of claims, including electronic documents and data, for subsequent financial and claims audits. This is because Treasury and/or its appointed designee(s) will need to have access to pertinent books, files, agreements and records which support the Certifications of Loss previously submitted. Insurer records should be retained for a minimum of three years following the conclusion of the policy year for premium information and for a minimum of five years following the final adjustment of each individual claim.

c. *Fraud and Civil Penalties.* One of the conditions for Federal payment under section 103(b) of the Act is that the insurer ''processes the claim for the insured loss in accordance with appropriate business practices, and any reasonable procedures that the Secretary may prescribe.'' The proposed rule provides that Treasury may deny eligibility for payment of the Federal share of insured losses should an insurer intentionally conceal or misrepresent any material fact or circumstance, engage in fraudulent conduct, or make false statements relating to participation under the Act. Fines, civil penalties and imprisonment under applicable Federal laws may also apply.

## IV. Procedural Requirements

*Executive Order 12866, ''Regulatory Planning and Review''.* This rule is a significant regulatory action for purposes of Executive Order 12866, ''Regulatory Planning and Review,'' and has been reviewed by the Office of Management and Budget.

*Regulatory Flexibility Act.* Pursuant to the Regulatory Flexibility Act, 5 U.S.C. 601 *et. seq.,* it is hereby certified that this proposed rule will not have a significant economic impact on a substantial number of small entities. Treasury is required to pay the Federal share of compensation to insurers for insured losses in accordance with the Act. A condition of Federal payment is that the insurer must submit to Treasury, in accordance with procedures established by Treasury, a claim for payment and certain certifications. The proposed rule seeks to emulate loss reporting practices in the reinsurance industry, which insurers already follow in order to get payment for reinsurance, thus minimizing the impact on all insurers. The Act itself requires all insurers receiving direct earned premium for any type of property and casualty insurance, as defined in the Act, to participate in the Program. This includes all insurers regardless of size or sophistication. The Act also defines property and casualty insurance to mean commercial lines

insurance without any reference to the size or scope of the insurer or the insured. Accordingly, any economic impact associated with the proposed rule flows from the Act and not the proposed rule. A regulatory flexibility analysis is thus not required.

*Paperwork Reduction Act.* The collection of information (recordkeeping requirement) contained in this proposed rule has been submitted to the Office of Management and Budget (OMB) for review under the requirements of the Paperwork Reduction Act, 44 U.S.C. 3507(d). The forms to be prescribed by Treasury will be the subject of a separate submission to OMB on which the public will be provided an opportunity to comment. An agency may not conduct or sponsor, and a person is not required to respond to, a collection of information unless it displays a valid control number assigned by OMB.

Organizations and individuals desiring to submit comments concerning the collection of information in the proposed rule should direct them to the Desk Officer for the Department of the Treasury, Office of Information and Regulatory Affairs, Office of Management and Budget, Washington, DC 20503 (preferably by Fax to 202–395–6974, or by e-mail to *jlackeyj@omb.eop.gov).* A copy of the comments should also be sent to Treasury at the addresses previously specified. Comments on the collection of information should be received by December 31, 2003.

Treasury specifically invites comments on: (a) Whether the proposed collection of information is necessary for the proper performance of the mission of Treasury, and whether the information will have practical utility; (b) the accuracy of the estimate of the burden of the collections of information (see below); (c) ways to enhance the quality, utility, and clarity of the information collection; (d) ways to minimize the burden of the information collection, including through the use of automated collection techniques or other forms of information technology; and (e) estimates of capital or start-up costs and costs of operation, maintenance, and purchase of services to maintain the information.

The collection of information in the proposed rule is the recordkeeping requirement in § 50.61. The information will be used by Treasury (or its designees) to audit or examine claims for Federal payments submitted by insurers. The recordkeeping requirement is mandatory for any insurer that seeks payment of a Federal share of compensation.

If an act of terrorism is certified under the Act, the number of respondents, if any, will be determined by the size and nature of the certified act of terrorism. Because of the extreme uncertainty regarding any such event, a ''best estimate'' has been developed based on the considered judgment of Treasury. This estimate has 100 insurers sustaining insured losses; each of these insurers would be required to retain records concerning 100 claims. Treasury believes that the records that insurers would be required to retain under § 50.61 largely duplicate the records that insurers would normally retain in the course of processing and administering claims, and that the burden associated with the proposed rule therefore is minimal. Accordingly, Treasury estimates that the proposed rule will impose 5 minutes of burden with respect to each claim; the estimated annual burden per recordkeeper is therefore 8.33 hours (100 claims × 5 minutes) and the estimated total annual burden is 833 hours (8.33 hours × 100 insurers).

**List of Subjects in 31 CFR Part 50**

Terrorism risk insurance.

For the reasons stated above, 31 CFR part 50 is proposed to be amended as follows:

## PART 50—TERRORISM RISK INSURANCE PROGRAM

1. The authority citation for part 50 continues to read as follows:

**Authority:** 5 U.S.C. 301; 31 U.S.C. 321; Title I, Pub. L. 107–297, 116 Stat. 2322 (15 U.S.C 6701 note).

2. Revise § 50.5(e) to read as follows:

### § 50.5 Definitions.

* * * * *

(e) *Insured loss.* (1) The term *insured loss* means any loss resulting from an act of terrorism (including an act of war, in the case of workers' compensation) that is covered by primary or excess property and casualty insurance issued by an insurer if the loss:

(i) Occurs within the United States;

(ii) Occurs to an air carrier (as defined in 49 U.S.C. 40102), to a United States flag vessel (or a vessel based principally in the United States, on which United States income tax is paid and whose insurance coverage is subject to regulation in the United States), regardless of where the loss occurs; or

(iii) Occurs at the premises of any United States mission.

(2)(i) A loss that occurs to an air carrier (as defined in 49 U.S.C. 40102), to a United States flag vessel, or a vessel based principally in the United States, on which United States income tax is paid and whose insurance coverage is subject to regulation in the United States, is not an insured loss under section 102(5)(B) of the Act unless it is incurred by the air carrier or vessel outside the United States.

(ii) An insured loss to an air carrier or vessel outside the United States under section 102(5)(B) of the Act does not include losses covered by third party insurance contracts that are separate from the insurance coverage provided to the air carrier or vessel.

(3) The term *insured loss* includes loss adjustment expenses incurred by an insurer in connection with insured losses that are allocated and identified by claim file in insurer records, including expenses incurred in the investigation, adjustment and defense of claims, but excluding staff adjuster salaries and any allocations of other internal insurer expenses.

(4) The term *insured loss* does not include:

(i) Punitive or exemplary damages awarded or paid in connection with the Federal cause of action specified in section 107(a)(1) of the Act. The term ''punitive or exemplary damages'' means damages that are not compensatory but are an award of money made to a claimant solely to punish or deter; or

(ii) Extra contractual damages awarded, or obligations paid by an insurer, including but not limited to, punitive, exemplary, or special damages, or damages in excess of policy limits.

* * * * *

3. New Subparts F and G of Part 50 are added to read as follows:

**Subpart F—Claims Procedures**

Sec.
50.50 Federal share of compensation.
50.51 Adjustments to the Federal share of compensation.
50.52 Initial Notice of Insured Loss.
50.53 Loss certifications.
50.54 Payment of Federal share of compensation.

## Subpart F—Claims Procedures

### § 50.50 Federal share of compensation.

(a) *General.* The Treasury will pay to insurers the Federal share of compensation for insured losses resulting from acts of terrorism as provided in section 103 of the Act. Treasury shall determine the amount of payment of the Federal share of compensation based upon a determination by Treasury, or upon Treasury's reservation of rights and a later determination, that:

(1) The insurer is an entity meeting the requirements of § 50.5(f);

(2) The insurer's insured losses as defined in § 50.5(e) have exceeded its insurer deductible as defined in § 50.5(g);

(3) The insurer has made payment of an underlying insured loss to a person who had suffered the insured loss, or to a person acting on behalf of such person, and who had filed a claim that was not fraudulent, collusive, made in bad faith or otherwise dishonest;

(4) The insurer had provided a clear and conspicuous disclosure as required by §§ 50.10 through 50.19;

(5) The insurer took all steps reasonably necessary to properly and carefully investigate the underlying insured loss and otherwise processed the underlying loss using appropriate insurance business practices;

(6) The insured losses submitted for payment are within the scope of coverage issued by the insurer for commercial property and casualty insurance as defined in § 50.5(l); and

(7) The procedures specified in this subpart have been followed and all conditions to payment have been met.

(b) *Amount payable.* The Federal share of compensation payable to an insurer under the Program shall be 90 percent of that portion of the insurer's aggregate insured losses that exceed its insurer deductible during a Program Year, subject to any adjustments in § 50.51 and the cap of $100 billion as provided in section 103(e)(2) of the Act.

**§ 50.51 Adjustments to the Federal share of compensation.**

(a) *Aggregate amount of insured losses.* The aggregate amount of insured losses of an insurer in a Program Year used to calculate the Federal share of compensation shall be reduced by any amounts recovered by the insurer as salvage or subrogation for its insured losses in the Program Year.

(b) *Amount of Federal share of compensation.* The Federal share of compensation shall be adjusted as follows:

(1) *No excess recoveries.* For any Program Year, the sum of the Federal share of compensation paid by Treasury to an insurer and the insurer's recoveries for insured losses from other sources shall not be greater than the insurer's aggregate amount of insured losses for acts of terrorism in that Program Year. Amounts recovered for insured losses in excess of an insurer's aggregate amount of insured losses in a Program Year shall be repaid to Treasury within 45 days after the end of the month when such amounts are received by the insurer. For purposes of this paragraph, amounts recovered from a reinsurer pursuant to an agreement whereby the reinsurer's right to any excess recovery has priority over the rights of Treasury shall not be considered a recovery subject to repayment to Treasury.

(2) *Reduction of amount payable.* The Federal share of compensation due an insurer for insured losses shall be reduced by any amounts received by the insurer or an insured or a third party suffering the underlying loss from any other Federal programs as compensation for those insured losses, including, but not limited to, insurance, assistance, grants or disaster relief from the Federal Government. Each insurer shall inquire of each of its claimants whether or not duplicate payments for insured losses have been paid from other Federal sources. Such amounts shall be reported with each underlying claim on the bordereau specified in § 50.53(b)(1) and the total amount subtracted from the aggregate amount claimed as the Federal share of compensation for insured losses.

**§ 50.52 Initial Notice of Insured Loss.**

Each insurer shall submit to Treasury an Initial Notice of Insured Loss, on a form prescribed by Treasury, whenever the insurer's aggregate insured losses (including reserves for ''incurred but not reported'' losses) within a Program Year exceed an amount equal to 50 percent of the insurer's deductible as specified in § 50.5(g). Insurers are advised the form for the Initial Notice of Insured Loss will include an initial estimate of aggregate losses for the Program Year, the amount of the insurer deductible and an estimate of the Federal share of compensation for the insurer's aggregate insured losses. In the case of an affiliated group of insurers, the form for the Initial Notice of Insured Loss will include the name and address of a single insurance entity within the affiliated group that will serve as the single point of contact for the purpose of providing loss and compliance certifications as required in § 50.53 and for receiving payments of the Federal share of compensation in accordance with § 50.54(b). An insurer, at its option, may elect to include with its Initial Notice of Insured Loss the certification of direct earned premium required by § 50.53(b)(3).

**§ 50.53 Loss certifications.**

(a) *General.* When an insurer has paid aggregate insured losses that exceed its insurer deductible, the insurer may make claim upon Treasury for the payment of the Federal share of compensation for its insured losses. The insurer shall file an Initial Certification of Loss, on a form prescribed by Treasury, and thereafter such Supplementary Certifications of Loss, on a form prescribed by Treasury, as may be necessary to receive payment for the Federal share of compensation for its insured losses.

(b) *Initial Certification of Loss.* An insurer shall use its best efforts to file the Initial Certification of Loss with Treasury within 45 days following the last calendar day of the month when an insurer's aggregate insured losses exceed its insurer deductible. Insurers are advised the Initial Certification of Loss will include the following:

(1) A bordereau, on a form prescribed by Treasury, that includes basic information about each underlying insured loss. The bordereau will include, but may not be limited to:

(i) A listing of each underlying insured loss by catastrophe code and line of business;

(ii) The total amount of reinsurance recovered from other sources;

(iii) A calculation of the aggregate insured losses sustained by the insurer above its insurer deductible for the Program Year; and

(iv) The amount the insurer claims as the Federal share of compensation for its aggregate insured losses.

(2) A certification that the insurer is in compliance with the provisions of section 103(b) of the Act and this part, including certifications that:

(i) The insurer has paid all underlying claims comprising the insured losses listed in the bordereau provided pursuant to § 50.53(b)(1);

(ii) The underlying claims for insured losses were filed by persons who suffered an insured loss, or by persons acting on behalf of such persons;

(iii) The underlying claims for insured losses were processed in accordance with appropriate business practices and the procedures specified in this subpart;

(iv) The insurer has complied with the disclosure requirements of §§ 50.10 through 50.19 for each underlying insured loss that is included in the amount of the insurer's aggregate insured losses; and

(v) The insurer has complied with the mandatory availability requirements of §§ 50.20 through 50.24.

(3) A certification of the amount of the insurer's ''direct earned premium'' as defined in § 50.5(d), together with the calculation of its ''insurer deductible'' as defined in § 50.5(g) (provided this certification was not submitted previously with Initial Notice of Insured Loss specified in § 50.52).

(c) *Supplementary Certification of Loss.* If the total amount of the Federal

share of compensation due an insurer for insured losses under the Act has not been determined at the time an Initial Certification of Loss has been filed, the insurer shall file monthly, or on a schedule otherwise determined by Treasury, Supplementary Certifications of Loss updating the amount of the Federal share of compensation owed for the insurer's insured losses. Supplementary Certifications of Loss will include the following:

(1) A bordereau described in § 50.53(b)(1); and

(2) A certification as described in § 50.53(b)(2).

(d) *Supplementary information.* In addition to the information required in paragraphs (b) and (c) of this section, Treasury may require such additional supporting documentation as required to ascertain the Federal share of compensation for the insured losses of any insurer.

(e) *Bordereau defined.* For purposes of this section, a ''bordereau'' is a report of basic information about an insurer's underlying claims that, in the aggregate, constitute the insured losses of the insurer.

**§ 50.54 Payment of Federal share of compensation.**

(a) *Timing.* Treasury will promptly pay to an insurer the Federal share of compensation due the insurer for its insured losses. Payment shall be made in such installments and on such conditions as determined by the Treasury to be appropriate. Any overpayments by Treasury of the Federal share of compensation will be offset from future payments to the insurer or returned to Treasury within 45 days.

(b) *Payee.* Payment of the Federal share of compensation for insured losses will be made to the insurer filing the Initial Notice of Loss required by § 50.52. In the case of an affiliated group of insurers, payment of the Federal share of compensation for the insured losses of the affiliated group will be made to the single insurance entity designated in the Initial Notice of Loss to receive payment on behalf of the affiliated group. It shall be the responsibility of the single insurance entity to distribute payments of the Federal share of compensation as appropriate to affiliated insurers in the group.

(c) *Assignment of payments.* To facilitate a single point of contact for payment of the Federal share of compensation to an affiliated group, an insurer within an affiliated group shall assign its rights to be paid amounts due or to become due from Treasury to the single insurance entity designated to receive payment on behalf of the affiliated group. The failure to make such an assignment may be grounds for Treasury to withhold, in whole or in part, payment of the Federal share of compensation due an insurer.

**Subpart G—Audit and Investigative Procedures**

50.60 Audit authority.
50.61 Recordkeeping.
50.62 Eligibility for Federal share of compensation.

## Subpart G—Audit and Investigative Procedures

**§ 50.60 Audit authority.**

The Secretary of the Treasury, or an authorized representative, shall have access to all books, documents, papers and records of an insurer that are pertinent to amounts paid to the insurer as the Federal share of compensation for insured losses for the purpose of investigation, confirmation, audit and examination.

**§ 50.61 Recordkeeping.**

Each insurer that seeks payment of a Federal share of compensation under subpart F of this part shall retain such records as are necessary to fully disclose all material matters pertinent to insured losses and the Federal share of compensation sought under the Program, including, but not limited to, records regarding premiums and insured losses for all commercial property and casualty insurance issued by the insurer and information relating to any adjustment in the amount of the Federal share of compensation payable. Insurers shall maintain detailed records for not less than 5 years from the termination dates of all reinsurance agreements involving commercial property and casualty insurance subject to the Act. Records relating to premiums shall be retained and available for review for not less than 3 years following the conclusion of the policy year. Records relating to underlying claims shall be retained for not less than 5 years following the final adjustment of the claim.

**§ 50.62 Eligibility for Federal share of compensation.**

(a) An insurer may be ineligible to receive payment for the Federal share of compensation for insured losses under the Act upon a determination by Treasury that the insurer:

(1) Intentionally concealed or misrepresented any material fact or circumstance;

(2) Engaged in fraudulent conduct; or

(3) Made false statements relating to participation under the Act or this Part.

(b) An insurer's ineligibility for payment of the Federal share of compensation shall be effective as of the date any act described in paragraph (a) of this section was committed.

(c) Fines, civil penalties and imprisonment under applicable Federal laws may apply in addition to ineligibility for payment of the Federal share of compensation.

Dated: November 12, 2003.

**Wayne A. Abernathy,**

*Assistant Secretary of the Treasury.*

[FR Doc. 03–29729 Filed 11–28–03; 8:45 am]

BILLING CODE 4830–01–P

---

## DEPARTMENT OF HOMELAND SECURITY

## Federal Emergency Management Agency

## 44 CFR Part 67

**[Docket No. FEMA–D–7576]**

## Proposed Flood Elevation Determinations

**AGENCY:** Federal Emergency Management Agency (FEMA), Emergency Preparedness and Response Directorate, Department of Homeland Security.

**ACTION:** Proposed rule.

**SUMMARY:** Technical information or comments are requested on the proposed Base (1% annual chance) Flood Elevations (BFEs) and proposed BFE modifications for the communities listed below. The BFEs are the basis for the floodplain management measures that the community is required either to adopt or to show evidence of being already in effect in order to qualify or remain qualified for participation in the National Flood Insurance Program (NFIP).

**DATES:** The comment period is ninety (90) days following the second publication of this proposed rule in a newspaper of local circulation in each community.

**ADDRESSES:** The proposed BFEs for each community are available for inspection at the office of the Chief Executive Officer of each community. The respective addresses are listed in the table below.

**FOR FURTHER INFORMATION CONTACT:** Doug Bellomo, P.E., Hazard Identification Section, Emergency Preparedness and Response Directorate, FEMA, 500 C Street SW., Washington, DC 20472, (202) 646–2903.

**SUPPLEMENTARY INFORMATION:** FEMA proposes to make determinations of base flood elevations and modified base flood elevations for each community listed below, in accordance with Section 110 of the Flood Disaster Protection Act of 1973, 42 U.S.C. 4104, and 44 CFR 67.4(a).

These proposed base flood and modified BFEs, together with the floodplain management criteria required by 44 CFR 60.3, are the minimum that are required. They should not be construed to mean that the community must change any existing ordinances that are more stringent in their floodplain management requirements. The community may at any time enact stricter requirements of its own, or pursuant to policies established by other Federal, state or regional entities. These proposed elevations are used to meet the floodplain management requirements of the NFIP and are also used to calculate the appropriate flood insurance premium rates for new buildings built after these elevations are made final, and for the contents in these buildings.

*National Environmental Policy Act.* This proposed rule is categorically excluded from the requirements of 44 CFR part 10, Environmental Consideration. No environmental impact assessment has been prepared.

*Regulatory Flexibility Act.* The Mitigation Division Director of the Emergency Preparedness and Response Directorate certifies that this proposed rule is exempt from the requirements of the Regulatory Flexibility Act because proposed or modified BFEs are required by the Flood Disaster Protection Act of 1973, 42 U.S.C. 4104, and are required to establish and maintain community eligibility in the NFIP. As a result, a regulatory flexibility analysis has not been prepared.

*Regulatory Classification.* This proposed rule is not a significant regulatory action under the criteria of Section 3(f) of Executive Order 12866 of September 30, 1993, Regulatory Planning and Review, 58 FR 51735.

*Executive Order 12612, Federalism.* This proposed rule involves no policies that have federalism implications under Executive Order 12612, Federalism, dated October 26, 1987.

*Executive Order 12778, Civil Justice Reform.* This proposed rule meets the applicable standards of Section 2(b)(2) of Executive Order 12778.

**List of Subjects in 44 CFR Part 67**

Administrative practice and procedure, flood insurance, reporting and recordkeeping requirements.

Accordingly, 44 CFR Part 67 is proposed to be amended as follows:

## PART 67—[AMENDED]

1. The authority citation for Part 67 continues to read as follows:

**Authority:** 42 U.S.C. 4001 *et seq.*; Reorganization Plan No. 3 of 1978, 3 CFR, 1978 Comp., p. 329; E.O. 12127, 44 FR 19367, 3 CFR, 1979 Comp., p. 376.

**§ 67.4 [Amended]**

2. The tables published under the authority of § 67.4 are proposed to be amended as follows:

| State | City/town/county | Source of flooding | Location | #Depth in feet above ground *Elevation in feet (NGVD) •Elevation in feet (NAVD) | |
|---|---|---|---|---|---|
| | | | | Existing | Modified |
| Massachusetts ..... | North Reading (Town), Middlesex County. | Martins Brook ..... | At Park Street ..... | *71 | *74 |
| | | | At outlet of Martins Pond ..... | *83 | *80 |
| | | Skug River ..... | At confluence with Martins Pond ..... | *83 | *80 |
| | | | Approximately 150 feet upstream of the corporate limits. | *83 | *84 |
| | | Martins Pond ..... | At its outlet into Martins Brook ..... | *83 | *80 |
| | | | At confluence of Skug River ..... | *83 | *80 |
| | | Bear Meadow ..... | At Haverhill Street ..... | None | *72 |
| | | Brook ..... | Approximately 1,125 feet upstream of Haverhill Street. | None | *74 |

Maps available for inspection at the North Reading Town Hall, 235 North Street, North Reading, Massachusetts.

Send comments to Mr. James P. Muldoon, Chairman of the Town of North Reading Board of Selectmen, North Reading Town Hall, 235 North Street, North Reading, Massachusetts 01864.

(Catalog of Federal Domestic Assistance No. 83.100, ''Flood Insurance.'')

Dated: November 18, 2003.

**Anthony S. Lowe,**

*Mitigation Division Director, Emergency Preparedness and Response Directorate.*

[FR Doc. 03–29793 Filed 11–28–03; 8:45 am]

BILLING CODE 9110–12–P

## DEPARTMENT OF HOMELAND SECURITY

## Federal Emergency Management Agency

## 44 CFR Part 67

**[Docket No. FEMA–D–7574]**

## Proposed Flood Elevation Determinations

**AGENCY:** Federal Emergency Management Agency (FEMA), Emergency Preparedness and Response Directorate, Department of Homeland Security.

**ACTION:** Proposed rule.

**SUMMARY:** Technical information or comments are requested on the proposed Base (1% annual chance) Flood Elevations and proposed BFE modifications for the communities listed below. The BFEs are the basis for the floodplain management measures that the community is required either to adopt or to show evidence of being already in effect in order to qualify or remain qualified for participation in the National Flood Insurance Program (NFIP).

**DATES:** The comment period is ninety (90) days following the second publication of this proposed rule in a newspaper of local circulation in each community.

**ADDRESSES:** The proposed BFEs for each community are available for inspection at the office of the Chief Executive Officer of each community. The respective addresses are listed in the following table.

**FOR FURTHER INFORMATION CONTACT:** Doug Bellomo, P.E., Hazard Identification Section, Emergency Preparedness and Response Directorate, FEMA, 500 C Street SW., Washington, DC 20472, (202) 646–2903.

**SUPPLEMENTARY INFORMATION:** FEMA (FEMA or Agency) proposes to make determinations of BFEs and modified BFEs for each community listed below, in accordance with Section 110 of the Flood Disaster Protection Act of 1973, 42 U.S.C. 4104, and 44 CFR 67.4(a).

These proposed base flood and modified BFEs, together with the floodplain management criteria required by 44 CFR 60.3, are the minimum that are required. They should not be construed to mean that the community must change any existing ordinances that are more stringent in their floodplain management requirements. The community may at any time enact stricter requirements of its own, or pursuant to policies established by other Federal, state or regional entities. These proposed elevations are used to meet the floodplain management requirements of the NFIP and are also used to calculate the appropriate flood insurance premium rates for new buildings built after these elevations are made final, and for the contents in these buildings.

*National Environmental Policy Act.* This proposed rule is categorically excluded from the requirements of 44 CFR part 10, Environmental Consideration. No environmental impact assessment has been prepared.

*Regulatory Flexibility Act.* The Mitigation Division Director of the Emergency Preparedness and Response Directorate certifies that this proposed rule is exempt from the requirements of the Regulatory Flexibility Act because proposed or modified BFEs are required by the Flood Disaster Protection Act of 1973, 42 U.S.C. 4105, and are required to establish and maintain community eligibility in the NFIP. As a result, a regulatory flexibility analysis has not been prepared.

*Regulatory Classification.* This proposed rule is not a significant regulatory action under the criteria of section 3(f) of Executive Order 12866 of September 30, 1993, Regulatory Planning and Review, 58 FR 51735.

*Executive Order 12612, Federalism.* This proposed rule involves no policies that have federalism implications under Executive Order 12612, Federalism, dated October 26, 1987.

*Executive Order 12778, Civil Justice Reform.* This proposed rule meets the applicable standards of section 2(b)(2) of Executive Order 12778.

**List of Subjects in 44 CFR Part 67**

Administrative practice and procedure, Flood insurance, Reporting and recordkeeping requirements.

Accordingly, 44 CFR part 67 is proposed to be amended as follows:

## PART 67—[AMENDED]

1. The authority citation for part 67 continues to read as follows:

**Authority:** 42 U.S.C. 4001 *et seq.*; Reorganization Plan No. 3 of 1978, 3 CFR, 1978 Comp., p. 329; E.O. 12127, 44 FR 19367, 3 CFR, 1979 Comp., p. 376.

**§ 67.4 [Amended]**

2. The tables published under the authority of § 67.4 are proposed to be amended as follows:

| Source of flooding | Location | #Depth in feet above ground * Elevation in feet (NGVD) • Elevation in feet (NAVD) | | Communities affected |
|---|---|---|---|---|
| | | Existing | Modified | |
| **NORTH CAROLINA Columbus County** | | | | |
| Beaverdam Swamp | At the confluence with Monte Swamp | None | •48 | Columbus County (Unincorporated Areas). |
| | Approximately 0.5 mile upstream of Chadbourn Clarendon Road. | None | •95 | |
| Big Branch into Beaverdam Swamp. | At the confluence with Beaverdam Swamp | None | •81 | Columbus County (Unincorporated Areas). |
| | Approximately 900 feet downstream of Railroad | None | •104 | |
| Big Branch into Monte Swamp. | At the confluence with Monte Swamp | None | •38 | Columbus County (Unincorporated Areas). |
| | Approximately 1.4 miles upstream of MM Ray Road | None | •47 | |
| Big Branch into Monte Swamp Tributary. | At the confluence with Big Branch into Monte Swamp | None | •44 | Columbus County (Unincorporated Areas). |
| | Approximately 0.8 mile upstream of the confluence with Big Branch into Monte Swamp. | None | •47 | |
| Big Branch into Western Prong Creek. | At the confluence with Western Prong Creek | None | •74 | Columbus County (Unincorporated Areas). |
| | Approximately 1,700 feet upstream of Greens Mill Road. | None | •90 | |
| Big Creek into Lake Waccamaw. | At the confluence with Lake Waccamaw | None | •43 | Columbus County (Unincorporated Areas), Town of Lake Waccamaw |
| | Approximately 860 feet upstream of Old Lake Road | None | •56 | |
| Big Creek into Marlow Branch. | At the upstream side of N.C. 905 | None | •27 | Columbus County (Unincorporated Areas). |
| | Approximately 0.5 mile upstream of Big Avenue | None | •39 | |
| Big Creek into Marlow Branch Tributary. | At the confluence with Big Creek into Marlow Branch | None | •28 | Columbus County (Unincorporated Areas). |

| Source of flooding | Location | #Depth in feet above ground<br>* Elevation in feet (NGVD)<br>• Elevation in feet (NAVD) | | Communities affected |
|---|---|---|---|---|
| | | Existing | Modified | |
| | Approximately 1.0 mile upstream of the confluence with Big Creek. | None | •35 | |
| Big Cypress Swamp | At the confluence with Seven Creeks | None | •30 | Columbus County (Unincorporated Areas). |
| | Approximately 0.9 mile upstream of Ramsey Ford Road. | None | •42 | |
| Big Freshwater Branch | At the confluence with Gapway Swamp | None | •80 | Columbus County (Unincorporated Areas). |
| | Approximately 1.0 mile upstream of Peanut Worely Road. | None | •104 | |
| Big Pond Branch | At the confluence with Beaverdam Swamp | None | •60 | Columbus County (Unincorporated Areas). |
| | Approximately 500 feet upstream of Mary B. White Road. | None | •85 | |
| Black Creek | At the confluence with Grissett Swamp | None | •80 | Columbus County (Unincorporated Areas), Town of Tabor City. |
| | Approximately 1.0 mile upstream of South Joe Brown Highway. | None | •99 | |
| Boggy Branch | At the confluence with Beaverdam Swamp and Monte Swamp. | None | •48 | Columbus County (Unincorporated Areas). |
| | Approximately 2.6 miles upstream of Old Tram Road | None | •56 | |
| Boggy Hill Branch | At the confluence with Grissett Swamp | None | •80 | Columbus County (Unincorporated Areas). |
| | Approximately 0.7 mile upstream of Old Stake Road | None | •90 | |
| Bogue Swamp | Approximately 1.0 mile downstream of the confluence of Alligator Branch. | •41 | •42 | Columbus County (Unincorporated Areas). |
| | Approximately 0.8 mile upstream of Unnamed Road | None | •64 | |
| Brier Creek | At the County boundary | None | •85 | Columbus County (Unincorporated Areas). |
| | Approximately 1.1 miles upstream of Haynes Lennon Highway. | None | •101 | |
| Browders Branch | At the confluence with Western Prong Creek | None | •70 | Columbus County (Unincorporated Areas). |
| | Approximately 400 feet upstream of Jordan Road | None | •82 | |
| Brown Marsh Swamp | At the upstream side of Red Hill Road | None | •70 | Columbus County (Unincorporated Areas). |
| | At the confluence of Slades Swamp | None | •70 | |
| Brown Mill Branch | At the confluence with Dunn Swamp | None | •77 | Columbus County (Unincorporated Areas). |
| | Approximately 1.8 miles upstream of Williamsons Crossroad. | None | •95 | |
| Butler Branch | At the confluence with Western Prong Creek | None | • 64 | Columbus County (Unincorporated Areas). |
| | At the downstream side of James B. White Highway | None | • 71 | |
| Camp Swamp | Approximately 920 feet downstream of the State boundary. | None | • 30 | Columbus County (Unincorporated Areas). |
| | Approximately 1,200 feet downstream of Dulah Road | None | • 44 | |
| Camp Swamp | Approximately 960 feet downstream of the State boundary. | None | • 32 | Columbus County (Unincorporated Areas). |
| Tributary 1 | Approximately 1.7 miles upstream of Dothan Road | None | • 41 | |
| Camp Swamp | At the confluence with Camp Swamp | None | • 32 | Columbus County (Unincorporated Areas). |
| Tributary 2 | At Dothan Road | None | • 37 | |
| Cedar Branch into Soules Swamp. | At the confluence with Soules Swamp | None | • 68 | Columbus County (Unincorporated Areas) |
| | Approximately 250 feet upstream of Chadbourn Clarendon Road. | None | • 89 | |
| Cedar Branch into Beaverdam Swamp. | At the confluence with Beaverdam Swamp | None | • 67 | Columbus County (Unincorporated Areas). |
| | Approximately 200 feet upstream of Peakcock Road | None | • 83 | |
| Cow Branch | At the downstream side of Williamsons Crossroad | •74 | •75 | Columbus County (Unincorporated Areas). |
| | Approximately 0.7 mile upstream of Strawberry Boulevard. | None | • 98 | |
| Cowpen Branch | At the confluence with Bogue Swamp | None | • 51 | Columbus County (Unincorporated Areas). |
| | Approximately 700 feet upstream of Hallsboro Road | None | • 57 | |

| Source of flooding | Location | #Depth in feet above ground<br>* Elevation in feet (NGVD)<br>• Elevation in feet (NAVD) | | Communities affected |
|---|---|---|---|---|
| | | Existing | Modified | |
| Creek Branch | At the confluence with Slap Swamp | None | •49 | Columbus County (Unincorporated Areas), Town of Lake Waccamaw. |
| | Approximately 0.4 mile upstream of East Andrew Jackson Highway. | None | •56 | |
| Crooked Run Branch | At the confluence with Gapway Swamp | None | •77 | Columbus County (Unincorporated Areas). |
| | At the State boundary | None | •89 | |
| Curries Branch | At the confluence with Butler Branch | None | •64 | Columbus County (Unincorporated Areas). |
| | Approximately 1.3 miles upstream of James B. White Highway. | None | •85 | |
| Deep Branch | At the State boundary | None | •27 | Columbus County (Unincorporated Areas). |
| | Approximately 0.5 mile downstream of Savannah Road | None | •40 | |
| Dunn Swamp | At the confluence with Porter Swamp | None | •77 | Columbus County (Unincorporated Areas). |
| | Approximately 0.9 mile upstream of Bird Cage Road | None | •93 | |
| Dunn Swamp | At the confluence with Dunn Swamp | None | •84 | Columbus County (Unincorporated Areas) |
| Tributary 1 | Approximately 1.3 miles upstream of the confluence with Dunn Swamp. | None | •90 | |
| Dunn Swamp | At the confluence with Dunn Swamp | None | •86 | Columbus County (Unincorporated Areas). |
| Tributary 2 | Approximately 200 feet upstream of Braswell Road | None | •95 | |
| Dunn Swamp | At the confluence with Dunn Swamp | None | •87 | Columbus County (Unincorporated Areas). |
| Tributary 3 | Approximately 400 feet upstream of Strawberry Boulevard. | None | •95 | |
| Tributary to Dunn | At the confluence with Dunn | None | •92 | Columbus County (Unincorporated Areas). |
| Swamp Tributary 2 | Approximately 650 feet upstream of the confluence with Dunn Swamp Tributary 2. | None | •92 | |
| Fivemile Branch | At the confluence with Soules Swamp | None | •67 | Columbus County (Unincorporated Areas). |
| | Approximately 400 feet downstream of Hubert White Road. | None | •95 | |
| Friar Swamp | At the confluence with Big Creek | None | •49 | Columbus County (Unincorporated Areas). |
| | Approximately 1.4 miles upstream of Old Lake Road | None | •54 | |
| Gapway Swamp | Approximately 300 feet downstream of Andrew Jackson Highway. | None | •62 | Columbus County (Unincorporated Areas). |
| | Approximately 1.3 miles upstream of Sidney Cherry Grove Road. | None | •102 | |
| Green Branch | At the confluence with Dunn Swamp | None | •80 | Columbus County (Unincorporated Areas). |
| | Approximately 1.1 miles upstream of Brasswell Road | None | •94 | |
| Greenes Branch | At the confluence with Western Prong Creek | None | •75 | Columbus County (Unincorporated Areas). |
| | Approximately 0.6 mile upstream of Silver Spoon Road | None | •91 | |
| Griffith Branch | At the confluence with White Marsh | None | •54 | Columbus County (Unincorporated Areas), City of Whiteville. |
| | Approximately 0.4 mile upstream of confluence with White Marsh. | •55 | •56 | |
| Grissett Swamp | At the confluence with Seven Creeks | None | •30 | Columbus County (Unincorporated Areas), Town of Tabor City. |
| | Approximately 0.8 mile upstream of Emerson Church Road. | None | •96 | |
| Grissett Swamp Tributary | At the confluence with Grissett Swamp | None | •81 | Columbus County (Unincorporated Areas). |
| | Approximately 1.2 miles upstream of Emerson Church Road. | None | •102 | |
| Gum Swamp | At the confluence with Monte Swamp | None | •44 | Columbus County (Unincorporated Areas). |
| | Approximately 0.5 mile upstream of Old Stake Road | None | •101 | |
| Honey Island Swamp | At the confluence with Juniper Creek | None | •43 | Columbus County (Unincorporated Areas). |

| Source of flooding | Location | #Depth in feet above ground * Elevation in feet (NGVD) • Elevation in feet (NAVD) | | Communities affected |
|---|---|---|---|---|
| | | Existing | Modified | |
| | Approximately 0.3 mile downstream of Green Swamp Road South. | None | •54 | |
| Horsepen Branch | At the Columbus/Robeson County boundary | None | •89 | Columbus County (Unincorporated Areas). |
| | At the Columbus/Bladen County boundary | None | •89 | |
| Huggins Creek | Approximately 70 feet downstream of the State boundary. | None | •87 | Columbus County downstream of (Unincorporated Areas) |
| | Approximately 1,700 feet upstream of Swamp Fox Highway East. | None | •98 | |
| Ironhill Branch | At the confluence with Toms Fork | None | •48 | Columbus County (Unincorporated Areas). |
| | Approximately 0.4 mile upstream of Reynolds Road | None | •73 | |
| Ironhill Branch Tributary | At the confluence with Ironhill Branch | None | •65 | Columbus County (Unincorporated Areas). |
| | Approximately 0.6 mile upstream of Kenny Jordan Road. | None | •73 | |
| Jockey Branch | At the confluence with Bogue Swamp | None | •46 | Columbus County (Unincorporated Areas). |
| | Approximately 0.6 mile upstream of South Hallsboro Road. | None | •53 | |
| Juniper Creek into Soules Swamp. | At the confluence with Soules Swamp | None | •73 | Columbus County (Unincorporated Areas). |
| | At the downstream side of Interstate 74/76 | None | •91 | |
| Juniper Creek into Waccamaw River. | Approximately 2,300 feet upstream of the confluence with Waccamaw River. | None | •35 | Columbus County (Unincorporated Areas). |
| | Approximately 1,350 feet upstream of the confluence of Leonard Creek. | None | •43 | |
| Juniper Swamp | At the confluence with Grissett Swamp | None | •38 | Columbus County (Unincorporated Areas). |
| | At the State boundary | None | •60 | |
| Lake Waccamaw | Entire shoreline within community | None | •43 | Columbus County (Unincorporated Areas). |
| Lebanon Branch | At the confluence with Beaverdam Swamp | None | •57 | Columbus County (Unincorporated Areas). |
| | Approximately 0.4 mile upstream of James B. White Highway. | None | •76 | |
| Little Freshwater Branch | At the confluence with Big Freshwater Branch | None | •86 | Columbus County (Unincorporated Areas). |
| | Approximately 0.9 mile upstream of the confluence with Big Freshwater Branch. | None | •95 | |
| Long Branch into Brown Mill Branch. | At the confluence with Brown Mill Branch | None | •78 | Columbus County (Unincorporated Areas). |
| | Approximately 1,030 feet upstream of the confluence with Brown Mill Branch. | None | •79 | |
| Long Branch into Gapway Swamp. | At the confluence with Gapway Swamp | None | •79 | Columbus County (Unincorporated Areas). |
| | Approximately 750 feet upstream of Coleman Cemetery Road. | None | •94 | |
| Main Line Canal | At the confluence with Big Creek | None | •43 | Columbus County (Unincorporated Areas), Town of Bolton. |
| | At South Green Swamp Road | None | •48 | |
| Marlow Branch | At the upstream side of State Road 905 | None | •27 | Columbus County (Unincorporated Areas). |
| | Approximately 1,450 feet upstream of Seven Creeks Parkway. | None | •30 | |
| Mill Branch Swamp | At the confluence with Gum Swamp | None | •59 | Columbus County (Unincorporated Areas). |
| | At the downstream side of South Joe Brown Highway | None | •97 | |
| Mollie Swamp | At the confluence with Monte Swamp | None | •42 | Columbus County (Unincorporated Areas). |
| | Approximately 0.5 mile upstream of Edward Road | None | •50 | |
| Mollies Branch | At the confluence with Soules Swamp | None | •57 | Columbus County (Unincorporated Areas), City of Whiteville. |
| | Approximately 500 feet upstream of New Britton Highway. | None | •69 | |

| Source of flooding | Location | #Depth in feet above ground<br>* Elevation in feet (NGVD)<br>• Elevation in feet (NAVD) | | Communities affected |
|---|---|---|---|---|
| | | Existing | Modified | |
| Monte Swamp | At the confluence with Grissett Swamp | None | •37 | Columbus County (Unincorporated Areas). |
| | At the confluence of Beaverdam Swamp and Boggy Branch. | None | •48 | |
| Palmetto Branch | At the confluence with Bogue Swamp | None | •45 | Columbus County (Unincorporated Areas). |
| | Approximately 0.4 mile upstream of South Hallsboro Road. | None | •51 | |
| Pine Log Branch | At the confluence with Soules Swamp | None | •58 | Columbus County (Unincorporated Areas), City of Whiteville. |
| | Approximately 2.6 miles upstream of Union Valley Road. | None | •94 | |
| Porter Swamp | At the upstream side of Homer Nance Road | None | •74 | Columbus County (Unincorporated Areas). |
| | Approximately 0.7 mile upstream of the confluence of Water Branch. | None | •92 | |
| Red Hill Swamp | At the confluence with Western Prong Creek and White Marsh. | None | •63 | Columbus County (Unincorporated Areas). |
| | At the upstream side of Red Hill Road | None | •70 | |
| Rattlesnake Creek | At the confluence with Spring Branch | None | •91 | Columbus County (Unincorporated Areas). |
| | Approximately 500 feet downstream of State Road 242 | None | •106 | |
| Ricefield Branch | At the confluence with Big Creek | None | •51 | Columbus County (Unincorporated Areas). |
| | Approximately 200 feet downstream of Old Lake Road | None | •63 | |
| Ricefield Branch Tributary | At the confluence with Ricefield Branch | None | •54 | Columbus County (Unincorporated Areas). |
| | Approximately 1.5 miles upstream of the confluence with Ricefield Branch. | None | •59 | |
| Richlands Branch | At the confluence with Slap Swamp | None | •61 | Columbus County (Unincorporated Areas). |
| | At the Columbus/Bladen County boundary | None | •73 | |
| Saespan Branch | At the confluence with Friar Swamp | None | •50 | Columbus County (Unincorporated Areas). |
| | At the Columbus/Bladen County boundary | None | •59 | |
| Sand Pit Branch | At the confluence with Simmons Bay Creek | •34 | •33 | Columbus County (Unincorporated Areas). |
| | Approximately 1.1 mile upstream of Happy Home Road. | None | •41 | |
| Seven Creeks | At the upstream side of Seven Creeks Highway | None | •29 | Columbus County (Unincorporated Areas). |
| | At the confluence of Big Cypress Swamp & Grissett Swamp. | None | •30 | |
| Simmons Creek | At the confluence with Grissett Swamp | None | •80 | Columbus County (Unincorporated Areas), Town of Tabor City. |
| | Approximately 250 feet upstream of Willoughby Road | None | •91 | |
| Skeebo Branch | At the confluence with Grissett Swamp | None | •70 | Columbus County (Unincorporated Areas), Town of Tabor City. |
| | Approximately 0.4 mile upstream of Will Inman Road | None | •86 | |
| Slap Branch | At the confluence with Slap Swamp | None | •76 | Columbus County (Unincorporated Areas). |
| | Approximately 0.4 mile upstream of the confluence of Reedy Branch. | None | •87 | |
| Slap Swamp | At the confluence with Big Creek into Marlow Branch | None | •49 | Columbus County (Unincorporated Areas). |
| | Approximately 200 feet upstream of Old Northeast Road. | None | •76 | |
| Slap Swamp Tributary | At the confluence with Slap Swamp | None | •51 | Columbus County (Unincorporated Areas). |
| | Approximately 0.8 mile upstream of the confluence with Slap Swamp. | None | •53 | |
| Slap Swamp Tributary 2 | At the confluence with Slap Swamp | None | •57 | Columbus County (Unincorporated Areas). |
| | Approximately 1,990 feet upstream of Chauncey Town Road. | None | •62 | |

| Source of flooding | Location | #Depth in feet above ground * Elevation in feet (NGVD) • Elevation in feet (NAVD) | | Communities affected |
|---|---|---|---|---|
| | | Existing | Modified | |
| Spring Branch into Bogue Swamp. | At the confluence with Bogue Swamp | None | •57 | Columbus County (Unincorporated Areas). |
| | Approximately 1.3 miles upstream of the confluence with Bogue Swamp. | None | •69 | |
| Soules Swamp | At the confluence with White Marsh Swamp | None | •51 | Columbus County (Unincorporated Areas), Town of Chadbourn, City of Whiteville. |
| | Approximately 650 feet upstream of Railroad Avenue | None | •90 | |
| Spring Branch into Rattlesnake Creek. | At the confluence with Horsepen Branch | None | •89 | Columbus County (Unincorporated Areas). |
| | At the confluence of Rattlesnake Creek | None | •91 | |
| Sweet Water Branch | At the confluence with Beaverdam Swamp | None | •67 | Columbus County (Unicorporated areas). |
| | Approximately 400 feet upstream of Sellers Town Road. | None | •73 | |
| Toms Fork | At the confluence with Grissett Swamp | None | •45 | Columbus County (Unincorporated Areas). |
| | Approximately 200 feet upstream of the State boundry | None | •70 | |
| Toms Fork Tributary | At the confluence with Toms Fork | None | •66 | Columbus County (Unincorporated Areas). |
| | Approximately 0.4 mile upstream of Cox Town Road | None | •80 | |
| Tributary to Toms Fork Tributary. | At the confluence with Toms Fork Tributary | None | •76 | Columbus County (Unincorporated Areas). |
| | At the State boundary | None | •85 | |
| Town Canal | At the confluence with Grissett Swamp | None | •70 | Columbus County (Unincorporated Areas), Town of Tabor City. |
| | Approximately 400 feeet upstream of Elizabeth Street | None | •81 | |
| Uncles Branch | At the confluence with Porter Swamp | None | •80 | Columbus County (Unincorporated Areas), Town of Cerro Gordo. |
| | Approximately 0.5 mile upstream of Charles Ford Road | None | •94 | |
| Ward Branch into Simmons Bay Creek. | At the confluence with Simmons Bay Creek | •34 | •33 | Columbus County (Unincorporated Areas). |
| | Approximately 1,750 feet upstream of Manly Smith Road. | None | •43 | |
| Ward Branch into Slap Swamp. | At the confluence with Slap Swamp | None | •76 | Columbus County (Unincorporated Areas). |
| | Approximately 200 feet upstream of Pocosin Road | None | •84 | |
| Welch Creek | At the confluence with White Marsh | None | •61 | Columbus County (Unincorporated Areas). |
| | Approximately 0.8 mile upstream of Burneys Mill Road | None | •83 | |
| Western Prong Creek | At the confluence with White Marsh | None | •63 | Columbus County (Unincorporated Areas). |
| | Approximately 0.6 mile upstream of Red Store Road | None | •93 | |
| Whiskey Swamp | At the confluence with Juniper Swamp | None | •40 | Columbus County (Unincorporated Areas). |
| | Just downstream of Dothan Road | None | •63 | |
| White Oak Branch | At the confluence with Bogue Swamp | None | •55 | Columbus County (Unincorporated Areas). |
| | Approximately 1.3 miles upstream of the confluence with Bogue Swamp. | None | •61 | |
| White Marsh | Approximately 1.6 miles downstream of South Hallsboro Road. | None | •42 | Columbus County (Unincorporated Areas). |
| | At the confluence of Western Prong Creek and Red Hill Swamp. | None | •63 | |
| Williams Branch | At the confluence with Gum Swamp | None | •53 | Columbus County (Unincorporated Areas). |
| | Approximately 0.5 mile upstream of John Ward Road | None | •67 | |
| Wolf Trap Branch | At the confluence with Porter Swamp | None | •74 | Columbus County (Unincorporated Areas). |
| | Approximately 825 feet upstream of SW Andrew Jackson Highway. | None | •90 | |

**Town of Bolton**

Maps available for inspection at the Bolton Town Hall, 221 9th Street, Bolton, North Carolina.

Send Comments to The Honorable Frank Wilson, Mayor of the Town of Bolton, P.O. Box 327, Bolton, North Carolina, 28423.

**Town of Cerro Gordo**

| Source of flooding | Location | #Depth in feet above ground * Elevation in feet (NGVD) • Elevation in feet (NAVD) | | Communities affected |
|---|---|---|---|---|
| | | Existing | Modified | |

Maps available for inspection at the Cerro Gordo Town Hall, 36 West Railroad Street, Cerro Gordo, North Carolina.

Send comments to The Honorable Rodney Hammond, Mayor of the Town of Cerro Gordo, P.O. Box 160, Cerro Gordo, North Carolina, 28430.

**Town of Chadbourn**

Maps available for inspection at the Office of the Town Manager, 208 East First Street, Chadbourn, North Carolina.

Send comments to The Honorable Leo Mercer, Mayor of the Town of Chadbourn, 208 East First Street, Chadbourn, North Carolina, 28431.

**Columbus County (Unincorporated Areas)**

Maps available for inspection at the Columbus County Tax Office, 110 Courthouse Square, Whiteville, North Carolina.

Send comments to Mr. Billy Joe Farmer, Columbus County Manager, 111 Washington Street, Whiteville, North Carolina, 28472.

**Town of Lake Waccamaw**

Maps available for inspection at the Office of the Building Inspector, 205 Flemington Drive, Lake Waccamaw, North Carolina.

Send comments to Mr. Lloyd Payne, Lake Waccamaw Town Manager, P.O. Box 145, Lake Waccamaw, North Carolina, 28450.

**Town of Whiteville**

Maps available for inspection at the Whiteville City Hall, 317 South Madison Street, Whiteville, North Carolina.

Send comments to The Honorable Ann Jones, Mayor of the City of Whiteville, P.O. Box 607, Whiteville, North Carolina, 28472.

**NORTH CAROLINA**
**Craven County**

| | | | | |
|---|---|---|---|---|
| Bachelor Creek | At Washington Post Road | None | •8 | Craven County (Unincorporated Areas). |
| | At the Craven/Jones County boundary | None | •29 | |
| Beaverdam Branch | At the confluence with Bachelor Creek | None | •10 | Craven County (Unincorporated Areas). |
| | Approximately 0.4 mile upstream of Hyman Road | None | •12 | |
| Beaverdam Swamp | At the confluence with Little Swift Creek | None | •9 | Craven County (Unincorporated Areas). |
| | Approximately 800 feet upstream of Hudnell Road | None | •17 | |
| Black Swamp Creek | Approximately 2.0 miles downstream of Catfish Lake Road. | None | •30 | Craven County (Unincorporated Areas). |
| | Approximately 0.9 mile upstream of Catfish Lake Road | None | •37 | |
| Brice Creek | At upstream side of Old Airport Road | None | •8 | Craven County (Unincorporated Areas). |
| | At the confluence with East Prong Brice Creek | None | •15 | |
| Bushy Fork | At the confluence with Little Swift Creek | None | •23 | Craven County (Unincorporated Areas). |
| | Approximately 0.8 mile upstream of the confluence with Little Swift Creek. | None | •28 | |
| Cahoogue Creek | Approximately 0.5 mile downstream of State Route 306. | None | •8 | Craven County (Unincorporated Areas). |
| | Approximately 0.3 mile upstream of NC Route 101 | None | •19 | |
| Clayroot Swamp | At the confluence with Swift Creek | None | •19 | Craven County (Unincorporated Areas). |
| | Approximately 0.5 mile upstream of Wilmer Road | None | •21 | |
| Clubfoot | At the downstream side of Adam Creek Road | None | •8 | Craven County (Unincorporated Areas). |
| | Approximately 1,850 feet downstream of Hodge Road | None | •10 | |
| Clubfoot Creek Tributary | Approximately 1,800 feet downstream of Adams Creek Road. | None | •8 | Craven County (Unincorporated Areas). |
| | Approximately 300 feet upstream of George Road | None | •13 | |
| Core Creek | At the confluence with Neuse River | None | •19 | Craven County (Unincorporated Areas). |
| | Approximately 0.8 mile upstream of Trenton Road | None | •36 | |
| Creeping Swamp | At the confluence with Clayfoot Swamp | None | •21 | Craven County (Unincorporated Areas). |
| | At the Craven/Beaufort County boundary | None | •33 | |
| Deep Branch | At the confluence with Bachelor Creek | None | •14 | Craven County (Unincorporated Areas). |
| | Approximately 0.5 mile downstream of Clarks Road | None | •14 | |
| East Prong Brice Creek | At the confluence with Brice Creek | None | •15 | Craven County (Unincorporated Areas). |
| | Approximately 1.9 miles upstream of the confluence with Brice Creek. | None | •19 | |
| East Prong Mortons Mill Pond. | At the confluence with Mortons Mill Pond | None | •8 | Craven County (Unincorporated Areas). |
| | Approximately 1,500 feet upstream of NC 101 | None | •10 | |

| Source of flooding | Location | #Depth in feet above ground * Elevation in feet (NGVD) • Elevation in feet (NAVD) | | Communities affected |
|---|---|---|---|---|
| | | Existing | Modified | |
| East Prong Slocum Creek .. | At the upstream side of Railroad Street ..... | None | •15 | City of Havelock, Craven County (Unincorporated Areas). |
| | Approximately 1.5 miles upstream of Railroad Street ... | None | •19 | |
| Fisher Swamp ..... | At the confluence with Beaver Dam Swamp ..... | None | •9 | Craven County (Unincorporated Areas). |
| | Approximately 3.4 miles upstream of the confluence with Beaverd dam Swamp. | None | •22 | |
| Flat Branch ..... | At the confluence with Core Creek ..... | None | •19 | Craven County (Unincorporated Areas). |
| | Approximately 1.8 miles upstream of NC 55 ..... | None | •30 | |
| Great Branch ..... | At the confluence with Brice Creek ..... | None | •15 | Craven County (Unincorporated Areas). |
| | Approximately 900 feet upstream of Tebo Road ..... | None | •19 | |
| Hancock Creek ..... | At the upstream side of NC 101 ..... | None | •8 | City of Havelock, Craven County (Unincorporated Areas). |
| | Approximately 1.6 miles upstream of NC 101 ..... | None | •21 | |
| Hollis Branch ..... | At the confluence with Bachelor Creek ..... | None | •27 | Craven County (Unincorporated Areas). |
| | Approximately 540 feet upstream of Hillard Road ..... | None | •36 | |
| Hunters Creek ..... | At the Craven/Carteret/Jones County boundary ..... | None | •24 | Craven County (Unincorporated Areas). |
| | Approximately 500 feet downstream of Great Lake ..... | None | •40 | |
| Jumping Run ..... | At the confluence with Bachelor Creek ..... | None | •8 | Craven County (Unincorporated Areas). |
| | Approximately 250 feet downstream of Highway 55 ..... | None | •15 | |
| Little Swift Creek ..... | At the upstream side of Highway 17 ..... | None | •8 | Craven County (Unincorporated Areas). |
| | Approximately 650 feet upstream of Beaver Dam Road | None | •25 | |
| Maple Cypress ..... | At the confluence with Neuse River ..... | None | •20 | Craven County (Unincorporated Areas). |
| | Approximately 0.7 mile upstream of Harris Road ..... | None | •29 | |
| Mauls Swamp ..... | At the upstream side of Mill Pond Road ..... | None | •35 | Town of Vanceboro, Craven County (Unincorporated Areas). |
| | Approximately 1.1 miles upstream of the confluence of Mauls Swamp Tributary 2. | None | •34 | |
| Mauls Swamp Tributary 1 .. | At the confluence with Mauls Swamp ..... | None | •23 | Craven County (Unincorporated Areas). |
| | Approximately 0.8 mile upstream of the confluence with Mauls swamp. | None | •30 | |
| Mauls Swamp Tributary 2 .. | At the confluence with Mauls Swamp ..... | None | •28 | Craven County (Unincorporated Areas). |
| | Approximately 0.9 mile upstream of the confluence with Mauls Swamp. | None | •35 | |
| Mill Branch ..... | At the confluence with Core Creek ..... | None | •26 | Craven County (Unincorporated Areas). |
| | Approximately 4.5 miles upstream of the confluence with Core Creek. | None | •56 | |
| Molocks Branch ..... | At the confluence with Hancock Creek ..... | None | •8 | Craven County (Unincorporated Areas). |
| | Approximately 0.7 mile upstream of the confluence with Hancock Creek. | None | •14 | |
| Morgan Swamp ..... | At the confluence with Upper Broad Creek ..... | None | •10 | Craven County (Unincorporated Areas). |
| | Approximately 1.2 miles upstream of Morgan Swamp Road. | None | •22 | |
| Mosley Creek ..... | At the confluence with Neuse River ..... | None | •25 | Craven County (Unincorporated Areas). |
| | Approximately 1.7 miles upstream of the confluence with Neuse River. | •24 | •25 | |
| Mosley Creek Tributary ..... | At the confluence with Mosley Creek ..... | None | •29 | Craven County (Unincorporated Areas). |
| | Approximately 2 miles upstream of the confluence with Mosley Creek. | None | •37 | |
| Neuse River ..... | Approximately 0.7 mile upstream of the confluence of Swift Creek. | •8 | •9 | City of New Bern, Craven County (Unincorporated Areas). |

| Source of flooding | Location | #Depth in feet above ground<br>* Elevation in feet (NGVD)<br>• Elevation in feet (NAVD) | | Communities affected |
|---|---|---|---|---|
| | | Existing | Modified | |
| | Approximately 1.2 miles upstream of the confluence with Contentnea Creek. | None | •25 | |
| Palmetto Swamp | At the confluence with Swift Creek | None | •17 | Craven County (Unincorporated Areas). |
| | Approximately 1.5 miles upstream of Palmetto Swamp Tributary 4. | None | •32 | |
| Palmetto Swamp Tributary 1. | At the confluence with Palmetto Swamp | None | •19 | Craven County (Unincorporated Areas) |
| | Approximately 0.9 mile upstream of the confluence with Palmetto Swamp. | None | •27 | |
| Palmetto Swamp Tributary 2. | At the confluence with Palmeto Swamp | None | •20 | Craven County (Unincorporated Areas). |
| | Approximately 150 feet upstream of Clark Road | None | •26 | |
| Palmetto Swamp Tributary 3. | At the confluence with Palmetto Swamp | None | •24 | Craven County (Unincorporated Areas) |
| | Approximately 0.6 mile upstream of the confluence with Palmetto Swamp. | None | •28 | |
| Palmetto Swamp Tributary 4. | At the confluence with Palmetto Swamp | None | •29 | Craven County (Unincorporated Areas). |
| | Approximately 800 feet upstream of Gray Road | None | •39 | |
| Pine Tree Swamp | At the confluence with Little Swift Creek | None | •14 | Craven County (Unincorporated Areas). |
| | At Cayton Road | None | •25 | |
| Pollard Swamp | At the confluence with Creeping Swamp | None | •30 | Craven County (Unincorporated Areas). |
| | Approximately 1.4 miles upstream of Pollard Road | None | •41 | |
| Rollover Creek | At the confluence with Bachelor Creek | None | •17 | Craven County (Unincorporated Areas). |
| | Approximately 0.7 mile upstream of Rollover Creek Road. | None | •37 | |
| Round Tree Branch | At the confluence with Bachelor Creek | None | •8 | Craven County (Unincorporated Areas). |
| | Approximately 1.2 miles upstream of the confluence with Bachelor Creek. | None | •11 | |
| South Canal | At the confluence with Hunters Creek | None | •33 | Craven County (Unincorporated Areas). |
| | Approximately 0.9 mile upstream of the confluence with Hunters Creek. | None | •38 | |
| Southwest Prong Slocum Creek. | At the upstream side of Miller Boulevard | None | •8 | City of Havelock, Craven County (Unincorporated Areas). |
| | Approximately 2.9 miles upstream of Central Street | None | •27 | |
| Spe Branch | At the confluence with Cahoogue Creek | None | •10 | Craven County (Unincorporated Areas). |
| | Approximately 0.7 mile upstream of confluence with Cahoogue Creek. | None | •15 | |
| Swift Creek | Approximately 0.6 mile upstream of NC Highway 43 | •8 | •9 | Town of Vanceboro, Craven County (Unincorporated Areas). |
| | Approximately 300 feet upstream of Gardnerville Road | None | •28 | |
| Tracey Swamp | At the upstream side of Sand Hill Road | None | •42 | Craven County (Unincorporated Areas). |
| | At the Craven/Jones County boundary | None | •43 | |
| Upper Broad Creek (Neuse Portion). | Approximately 1.8 miles downstream of the confluence of Deep Run. | None | •8 | Craven County (Unincorporated Areas). |
| | Approximately 2.9 miles upstream of the confluence of Possum Swamp. | None | •29 | |
| Upper Broad Creek (Tar-Pamlico Portion). | Approximately 125 feet downstream of the Craven/Beaufort County boundary. | None | •31 | Craven County (Unincorporated Areas). |
| | Approximately 0.7 miles upstream of the Craven/Beaufort County boundary. | None | •37 | |
| Village Creek | At the confluence with Neuse River | None | •20 | Craven County (Unincorporated Areas). |
| | Approximately 400 feet upstream of Highway 55 | None | •45 | |
| West Prong Brice Creek | At the confluence with Brice Creek | None | •15 | Craven County (Unincorporated Areas). |
| | Approximately 0.7 mile upstream of Catfish Lake Road | None | •36 | |
| West Prong Mortons Mill Pond. | At the confluence with Mortons Mill Pond | None | •8 | Craven County (Unincorporated Areas). |

| Source of flooding | Location | #Depth in feet above ground * Elevation in feet (NGVD) • Elevation in feet (NAVD) | | Communities affected |
|---|---|---|---|---|
| | | Existing | Modified | |
| | Approximately 1.3 miles upstream of North Carolina Route 101. | None | •18 | |

**City of Havelock**

Maps available for inspection at the City of Havelock Planning Department, 199 Cunningham Boulevard, Havelock, North Carolina.

Send comments to The Honorable George Griffin, Mayor of the City of Havelock, P.O. Box 368, Havelock, North Carolina 28532.

**City of New Bern**

Maps available for inspection at the New Bern Building Inspection Department, 300 Pollock Street, New Bern, North Carolina.

Send comments to The Honorable Tom Bayliss, III, Mayor of the City of New Bern, P.O. Box 1129, New Bern, North Carolina 28563.

**Unincorporated Areas of Craven County**

Maps available for inspection at the Craven County Planning Department, Craven County Government, 406 Craven Street, New Bern, North Carolina.

Send comments to Mr. Johnnie Sampson, Jr., Chairman of the Craven County Board of Commissioners, 406 Craven Street, New Bern, North Carolina 28560.

**Town of Vanceboro**

Maps available for inspection at the Craven County Planning Department, 406 Craven Street, New Bern, North Carolina.

Send comments to The Honorable Jimmie Morris, Mayor of the Town of Vanceboro, P.O. Box 306, Vanceboro, North Carolina 28586.

**NORTH CAROLINA**
**Granville County**

| | | | | |
|---|---|---|---|---|
| Aycock Creek | At the confluence with Johnson Creek | None | •317 | Granville County (Unincorporated Areas). |
| | Approximately 1,880 feet upstream of Sanders Road | None | •360 | |
| Beaverdam Creek | At the Granville/Wake County boundary | None | •262 | Granville County (Unincorporated Areas). |
| | Approximately 600 feet upstream of NC 56 | None | •318 | |
| Beaverdam Creek Tributary 3. | At the confluence with Beaverdam Creek | None | •282 | Granville County (Unincorporated Areas). |
| | Approximately 0.9 mile upstream of Side Road | None | •319 | |
| Beaverdam Creek Tributary 5. | At the confluence with Beaverdam Creek | None | •305 | Granville County (Unincorporated Areas). |
| | Approximately 0.4 mile upstream of the confluence with Beaverdam Creek. | None | •314 | |
| Bollens Creek | At the confluence with Boul Creek | None | •321 | Granville County (Unincorporated Areas). |
| | Approximately 0.6 mile upstream of US HWY 15 | None | •408 | |
| Boul Creek | At the confluence with the Tar River | •319 | •317 | Granville County (Unincorporated Areas). |
| | Approximately 1.3 miles upstream of the confluence of Bollens Creek. | None | •358 | |
| Camp Creek | At the confluence with Knap of Reeds Creek | None | •376 | Granville County (Unincorporated Areas). |
| | At the Granville/Durham County boundary | None | •427 | |
| Cedar Creek | At the confluence with Robertson Creek | None | •279 | Granville County (Unincorporated Areas). |
| | Approximately 1.3 miles upstream of Hayes Road | None | •313 | |
| Coon Creek | Approximately 200 feet upstream of the confluence with Fishing Creek. | None | •343 | Granville County (Unincorporated Areas), City of Oxford. |
| | Approximately 100 feet upstream of Winding Oak Road. | None | •450 | |
| Cozart Creek | Approximately 450 feet downstream of West B Street | None | •262 | Granville County (Unincorporated Areas). |
| | Approximately 1,900 feet upstream of Coley Road | None | •272 | |
| Cozart Creek Tributary 1 | Approximately 250 feet downstream of Roycroft Road | None | •262 | Granville County (Unincorporated Areas). |
| | Approximately 1.5 miles upstream of US 15 | None | •282 | |
| Cozart Creek Tributary 2 | At the confluence with Cozart Creek Tributary 1 | None | •262 | Granville County (Unincorporated Areas). |
| | Approximately 0.9 mile upstream of the confluence with Cozart Creek Tributary 1. | None | •278 | |
| Cozart Creek Tributary 3 | At the confluence with Cozart Creek Tributary 2 | None | •262 | Granville County (Unincorporated Areas). |
| | Approximately 0.5 mile upstream of Northside Road | None | •270 | |
| Cub Creek | At the confluence with the Tar River | None | •432 | Granville County (Unincorporated Areas). |

| Source of flooding | Location | #Depth in feet above ground<br>* Elevation in feet (NGVD)<br>• Elevation in feet (NAVD) | | Communities affected |
|---|---|---|---|---|
| | | Existing | Modified | |
| | Approximately 600 feet upstream of George Sherman Road. | None | •478 | |
| Cub Creek Tributary 1 | At the confluence with Cub Creek | None | •439 | Granville County (Unincorporated Areas). |
| | At the Granville/Person County boundary | None | •477 | |
| Dickens Creek | At the confluence with Knap of Reeds Creek | None | •360 | Granville County (Unincorporated Areas). |
| | Approximately 1,650 feet upstream of Little Mountain Road. | None | •440 | |
| Fishing Creek | Approximately 700 feet upstream of Knotts Grove Road. | None | •375 | Granville County (Unincorporated Areas), City of Oxford |
| | Approximately 1,700 feet upstream of Interstate 85 | None | •409 | |
| Fishing Creek Tributary 1 | Approximately 200 feet upstream of US HWY 15 | None | •434 | Granville County (Unincorporated Areas), City of Oxford. |
| | Approximately 50 feet upstream of Sunset Avenue | None | •457 | |
| Fork Creek | At the confluence with the Tar River | None | •245 | Granville County (Unincorporated Areas). |
| | Approximately 500 feet upstream of Old Mill Farm Road. | None | •342 | |
| Fox Creek | At the confluence with Shelton Creek | None | •246 | Granville County (Unincorporated Areas). |
| | Approximately 3.4 miles upstream of Sunset Road | None | •376 | |
| Gibbs Creek | At the confluence with the Tar River | None | •288 | Granville County (Unincorporated Areas). |
| | Approximately 4.9 miles upstream of Gray Rock Road | None | •469 | |
| Holman Creek | At Brogden Road | None | •288 | Granville County (Unincorporated Areas), City of Creedmoor. |
| | Approximately 700 feet upstream of State Route 1136 | None | •469 | |
| Holman Creek Tributary 1 | At the confluence with Holman Creek | None | •378 | Granville County (Unincorporated Areas), Town of Stem. |
| | Approximately 2,000 feet upstream of Tally Ho Road | None | •436 | |
| Holman Creek Tributary 2 | At the confluence with Holman Creek | None | •395 | Granville County (Unincorporated Areas). |
| | Approximately 0.4 mile upstream of the confluence with Holman Creek. | None | •428 | |
| Holman Creek Tributary 3 | At the confluence with Holman Creek | None | •309 | Granville County (Unincorporated Areas). |
| | Approximately 0.7 mile upstream of the confluence with Holman Creek. | None | •330 | |
| Jackson Creek | At the confluence with the Tar River | •359 | •366 | Granville County (Unincorporated Areas). |
| | Approximately 1.6 miles upstream of Old Route 75 | None | •441 | |
| Johnson Creek | Approximately 0.4 mile Tar River Road | None | •317 | Granville County downstream of (Unincorporated Areas). |
| | Approximately 1,100 feet downstream of Interstate 85 | None | •363 | |
| Johnson Creek Tributary | Approximately 1,700 feet of Tar River Road | None | •316 | Granville County downstream (Unincorporated Areas). |
| | Approximately 0.7 mile upstream of Tar River Road | None | •329 | |
| Jordan Creek Tributary 1 | At the confluence with Jordan Creek | None | •448 | Granville County (Unincorporated Areas), City of Oxford |
| | Approximately 1.4 miles upstream of the confluence with Jordan Creek. | None | •480 | |
| Jordan Creek Tributary 2 | At the confluence with Jordan Creek | None | •448 | Granville County (Unincorporated Areas), City of Oxford. |
| | Approximately 0.7 mile upstream of the confluence with Jordan Creek. | None | •462 | |
| Knap Creek Tributary | At the confluence with Lake Butner | None | •360 | Granville County (Unincorporated Areas). |
| | Approximately 700 feet upstream of Roberts Chapel Road. | None | •419 | |

| Source of flooding | Location | #Depth in feet above ground<br>* Elevation in feet (NGVD)<br>• Elevation in feet (NAVD) | | Communities affected |
|---|---|---|---|---|
| | | Existing | Modified | |
| Knap of Reeds Creek | At Roberts Chapel Road | None | •360 | Granville County (Unincorporated Areas). |
| | Approximately 0.7 mile upstream of Enon Road | None | •452 | |
| Knap of Reeds Creek Tributary 1. | At the confluence with Knap Creek | None | •422 | Granville County of Reeds (Unincorporated Areas). |
| | Approximately 1.1 miles upstream of the confluence with Knap of Reeds Creek. | None | •459 | |
| Knap of Reeds Creek Tributary 2. | At the confluence with Knap of Reeds Creek | None | •446 | Granville County (Unincorporated Areas). |
| | Approximately 0.6 mile upstream of the confluence with Knap of Reeds Creek. | None | •456 | |
| Knap Reed Tributary | At the confluence with Knap of Reeds Creek | None | •265 | Granville County (Unincorporated Areas). |
| | Approximately 1,000 feet downstream of Amed Road | None | •265 | |
| Ledge Creek | At the Granville/Wake County boundary | None | •263 | Granville County (Unincorporated Areas), Town of Stem. |
| | Approximately 0.6 mile upstream of Little Mountain Road. | None | •472 | |
| Ledge Creek Tributary 2 | At the confluence with Ledge Creek | None | •267 | Granville County (Unincorporated Areas). |
| | Approximately 0.9 mile upstream of the confluence with Ledge Creek. | None | •280 | |
| Ledge Creek Tributary 3 | At the downstream side of U.S. 15 | None | •278 | Granville County (Unincorporated Areas), City of Creedmoor. |
| | Approximately 0.4 mile upstream of U.S. 15 | None | •311 | |
| Ledge Creek Tributary 4 | Approximately 1,500 feet upstream of the confluence of Ledge Creek Tributary 3. | None | •279 | Granville County (Unincorporated Areas), City of Creedmoor. |
| | Approximately 1,150 feet upstream of Charles Street | None | •314 | |
| Mill Creek | At the confluence with New Light Creek and West Prong. | None | •294 | Granville County (Unincorporated Areas). |
| | Approximately 300 feet upstream of Woodland Church Road. | None | •343 | |
| New Light Creek | At the Granville/Wake County boundary | None | •283 | Granville County (Unincorporated Areas). |
| | At the confluence with Mill Creek and West Prong | None | •294 | |
| New Light Creek Tributary (Basin 3 Stream 8). | At the downstream Granville/Wake County boundary | None | •316 | Granville County (Unincorporated Areas). |
| | At the upstream Granville/Wake County boundary | None | •358 | |
| New Light Creek Tributary 4. | At the Granville/Wake County boundary | None | •283 | Granville County (Unincorporated Areas). |
| | Approximately 0.4 mile upstream of the Granville/Wake County boundary. | None | •296 | |
| North Fork Tar River | At the confluence with the Tar River | None | • 397 | Granville County (Unincorporated Areas). |
| | Approximately 1.1 miles upstream of the confluence of North Fork Tar River Tributary 2. | None | • 468 | |
| North Fork Tar River Tributary 1 | At the confluence with North Fork Tar River | None | • 397 | Granville County (Unincorporated Areas). |
| | Approximately 2.9 miles upstream of the confluence with North Fork Tar River. | None | • 459 | |
| North Fork Tar River Tributary 2. | At the confluence with North Fork Tar River | None | • 445 | Granville County (Unincorporated Areas). |
| | Approximately 1.0 mile upstream of Bodie Currin Road | None | • 458 | |
| Owen Creek | At the confluence with the Tar River | None | • 387 | Granville County (Unincorporated Areas). |
| | Approximately 2.1 miles upstream of Harper Renn Road. | None | • 436 | |
| Picture Creek | At Central Avenue Extension | None | • 283 | Granville County (Unincorporated Areas). |
| | Approximately 0.7 mile upstream of the confluence with Picture Creek Tributary. | None | • 344 | |
| Picture Creek Tributary | At the confluence with Picture Creek | None | • 316 | Granville County (Unincorporated Areas). |
| | Approximately 0.5 mile upstream of the confluence with Picture Creek. | None | • 339 | |

| Source of flooding | Location | #Depth in feet above ground<br>* Elevation in feet (NGVD)<br>• Elevation in feet (NAVD) | | Communities affected |
|---|---|---|---|---|
| | | Existing | Modified | |
| Reedy Branch | At the confluence with Beaverdam Creek | None | • 271 | Granville County (Unincorporated Areas). |
| | Approximately 0.6 mile upstream of Country Lane | None | • 333 | |
| Robertson Creek | At the confluence with Beaverdam Creek | None | • 262 | Granville County (Unincorporated Areas), City of Creedmoor. |
| | Approximately 1.2 miles upstream of the confluence of Robertson Creek Tributary 2. | None | • 308 | |
| Robertson Creek Tributary 1. | At the confluence with Robertson Creek | None | • 262 | Granville County (Unincorporated Areas). |
| | Approximately 0.8 mile upstream of Dove Road | None | • 277 | |
| Robertson Creek Tributary 2. | At the confluence with Robertson Creek | None | • 295 | Granville County (Unincorporated Areas). |
| | Approximately 0.4 mile upstream of Moss Back Road | None | • 305 | |
| Rocky Creek | At the confluence with the Tar River | None | • 384 | Granville County (Unincorporated Areas). |
| | Approximately 2.9 miles upstream of James Royster Road. | None | • 431 | |
| Shelton Creek | At the confluence with the Tar River | None | • 399 | Granville County (Unincorporated Areas). |
| | Approximately 1,250 feet upstream of Goshen Road | None | • 529 | |
| Smith Creek | At the confluence with Beaverdam Creek | None | • 262 | Granville County (Unincorporated Areas). |
| | Approximately 2.3 miles upstream of Lawrence Road | None | • 371 | |
| Syble Creek | At the Granville/Wake County boundary | None | • 262 | Granville County (Unincorporated Areas). |
| | Approximately 0.8 mile upstream of US 15 | None | • 304 | |
| Tabbs Creek | Approximately 700 feet upstream of Tom Parham Road. | None | • 419 | Granville County (Unincorporated Areas). |
| | Approximately 0.6 mile upstream of Tom Parham Road | None | • 426 | |
| Tar River | At the downstream County boundary | None | • 245 | Granville County (Unincorporated Areas). |
| | Approximately 225 feet upstream of the Granville/Person County Boundary. | None | • 500 | |
| Tar River Tributary 2 | At the confluence with the Tar River | None | • 313 | Granville County (Unincorporated Areas). |
| | Approximately 1.3 miles upstream of Tom Hunt Road | None | • 330 | |
| Tar River Tributary 3 | At the confluence with Tar River Tributary 2 | None | • 314 | Granville County (Unincorporated Areas). |
| | Approximately 1.1 miles upstream of Tar River Tributary 2. | None | • 334 | |
| Tar River Tributary 4 | At the confluence with the Tar River | None | • 449 | Granville County (Unincorporated Areas). |
| | Approximately 1.2 miles upstream of Gene Hobgood Road. | None | • 493 | |
| West Prong | At the confluence with New Light Creek and Mill Creek | None | • 294 | Granville County (Unincorporated Areas). |
| | Approximately 1.2 miles upstream of Graham Sherron Road. | None | • 357 | |
| West Prong Tributary | At the confluence with West Prong | None | • 305 | Granville County (Unincorporated Areas). |
| | Approximately 650 feet upstream of Woodland Church Road. | None | • 356 | |

**City of Creedmoor**

Maps available for inspection at the City of Creedmoor Planning and Zoning Office, 111 Masonic Street, Creedmoor, North Carolina.

Send comments to The Honorable Darryl Moss, Mayor of the City of Creedmoor, P.O. Box 765, Creedmoor, North Carolina 27522.

**Town of Stem**

Maps available for inspection at the Granville County Planning Department, 122 Williamsboro Street, Oxford, North Carolina.

Send comments to The Honorable Jack Day, Mayor of the Town of Stem, 113 Old NC 75N, Creedmoor, North Carolina 27522.

**Unincorporated Areas of Granville County**

Maps available for inspection at the Granville County Planning Department, 122 Williamsboro Street, Oxford, North Carolina.

Send comments to Mr. J. Dudley Watts, Jr., Granville County Manager, P.O. Box 906, Oxford, North Carolina 27565.

| Source of flooding | Location | #Depth in feet above ground * Elevation in feet (NGVD) • Elevation in feet (NAVD) | | Communities affected |
|---|---|---|---|---|
| | | Existing | Modified | |
| **NORTH CAROLINA Johnston County** | | | | |
| Arters Branch | Approximately 0.6 mile upstream of the confluence with the Neuse River. | None | •124 | Town of Smithfield, Johnston County (Unincorporated Areas). |
| | Approximately 300 feet upstream of North Johnson Road. | None | •155 | |
| Bawdy Creek | Approximately 1.3 miles upstream of the confluence with the Neuse River. | None | •88 | Johnston County (Unincorporated Areas). |
| | At the confluence of Bawdy Swamp and Quincosin Swamp. | None | 110 | |
| Bawdy Swamp | At the confluence of Bawdy Creek and Quincosin Swamp. | None | •110 | Johnston County (Unincorporated Areas). |
| | Approximately 0.8 mile upstream of U.S. Route 70 | None | •160 | |
| Beaverdam Branch | Approximately 0.5 mile upstream of the confluence with Middle Creek. | •172 | •173 | Johnston County (Unincorporated Areas). |
| | Approximately 100 feet downstream of Raleigh Road | None | •183 | |
| Beaverdam Creek | At the Wayne/Johnston County boundary | None | •124 | Town of Princeton, Johnston County (Unincorporated Areas). |
| | Approximately 450 feet downstream of East Edwards Street. | None | •141 | |
| Beaverdam Swamp | Approximately 0.3 mile upstream of the confluence with Hannah Creek. | •128 | •129 | Johnston County (Unincorporated Areas). |
| | Approximately 1,300 feet upstream of Tettersville Road | None | •151 | |
| Beddingfield Creek | Approximately 0.5 mile downstream of Wake/Johnston County boundary. | None | •164 | Johnston County (Unincorporated Areas). |
| | Approximately 1.0 mile downstream of the confluence with the Neuse River. | None | •166 | |
| Bernal Branch | Approximately 1,250 feet downstream of Interstate 95 | •128 | •129 | Johnston County (Unincorporated Areas). |
| | Approximately 1.6 miles upstream of Railroad | None | •185 | |
| Big Arm Creek | At the confluence of Marks Creek | None | •163 | Town of Clayton, Johnston County (Unincorporated Areas). |
| | Approximately 0.5 mile upstream of Medlin Road | None | •184 | |
| Big Branch | At the confluence with Little River | •140 | •141 | Town of Micro, Johnston County (Unincorporated Areas). |
| | Approximately 0.3 mile upstream of Micro Road West | None | •183 | |
| Black Creek | Approximately 300 feet upstream of Highway 210 | None | •191 | Johnston County (Unincorporated Areas). |
| | At the Wake/Johnston County boundary | None | 213 | |
| Black Creek Tributary | Approximately 1,750 feet upstream of the confluence with Black Creek. | None | •185 | Johnston County (Unincorporated Areas). |
| | Approximately 2.5 miles upstream of the confluence with Black Creek. | None | •212 | |
| Buffalo Creek (East) | At the upstream side of N.C. 42 | None | •205 | Johnston County (Unincorporated Areas). |
| | At the Wake/Johnston County boundary | None | •246 | |
| Bull Branch | At the confluence with Moccasin Creek | None | •152 | Johnston County (Unincorporated Areas). |
| | Approximately 2.3 miles upstream of the confluence with Moccasin Creek. | None | •218 | |
| Burnt Stocking Branch | At the confluence with Little Creek (near Micro) | None | •139 | Johnston County (Unincorporated Areas). |
| | Approximately 0.3 mile downstream of Interstate 95 | None | •169 | |
| Camp Branch | Approximately 1,300 feet upstream of the confluence with Black Creek. | None | •162 | Johnston County (Unincorporated Areas). |
| | Approximately 0.3 mile upstream of Stephenson Road | None | •177 | |
| Cattail Creek | At the confluence with Little River | None | •182 | Johnston County (Unincorporated Areas). |
| | Approximately 900 feet upstream of Harris Wilson Road. | None | •274 | |
| Cooper Branch | Approximately 0.2 mile upstream of Little Creek Church Road. | None | •142 | Johnston County (Unincorporated Areas). |
| | Approximately 0.4 mile upstream of Little Creek Church Road. | None | •144 | |

| Source of flooding | Location | #Depth in feet above ground<br>*Elevation in feet (NGVD)<br>•Elevation in feet (NAVD) | | Communities affected |
|---|---|---|---|---|
| | | Existing | Modified | |
| Dicks Branch | Approximately 2,000 feet upstream of the confluence with Black Creek. | •158 | •159 | Johnston County (Unincorporated Areas). |
| | Approximately 1,980 feet upstream of Zacks Mill Road | None | •172 | |
| Dismal Branch | At the confluence with Johnson Swamp | None | •129 | Johnston County (Unincorporated Areas). |
| | Approximately 300 feet downstream of Interstate 40 | None | •149 | |
| Great Swamp | At the Wayne/Johnston County boundary | None | •160 | Johnston County (Unincorporated Areas). |
| | Approximately 150 feet upstream of the Wayne/Johnston County boundary. | None | •161 | |
| Hannah Creek | Approximately 0.5 mile upstream of the confluence of Stony Fork. | None | •134 | Town of Benson, Johnston County (Unincorporated Areas). |
| | Approximately 0.5 mile upstream of Interstate 40 | None | •168 | |
| Hannah Creek Tributary 2 | At the confluence with Hannah Creek | None | •147 | Town of Benson, Johnston County (Unincorporated Areas). |
| | Approximately 500 feet upstream of Tarheel Road | None | •184 | |
| Hardee Mill Branch | Approximately 1,900 feet upstream of the confluence with Black Creek. | None | •158 | Johnston County (Unincorporated Areas). |
| | Approximately 0.8 mile upstream of Benson Hardee Road. | None | •177 | |
| Hogpen Branch | At the confluence with Bernal Branch | None | •136 | Johnston County (Unincorporated Areas). |
| | Approximately 0.5 mile upstream of Hummingbird Road. | None | •152 | |
| John K. Swamp | At the confluence with Mill Creek | None | •149 | Johnston County (Unincorporated Areas). |
| | Approximately 0.7 mile upstream of Holly Grove Road | None | •188 | |
| John K. Swamp Tributary | At the confluence with John K. Swamp | None | •186 | Johnston County (Unincorporated Areas). |
| | Approximately 720 feet upstream of the confluence with John K. Swamp. | None | •187 | |
| Johnson Swamp | At the confluence with Stone Creek | None | •121 | Johnston County (Unincorporated Areas). |
| | Approximately 1,200 feet upstream of Highway 96 | None | •172 | |
| Johnson Swamp Tributary | At the confluence with Johnson Swamp | None | •146 | Johnston County (Unincorporated Areas). |
| | Approximately 950 feet upstream of Highway 96 | None | •169 | |
| Jumping Run | At the confluence with Mill Creek | None | •158 | Johnston County (Unincorporated Areas). |
| | Approximately 1.1 miles upstream of Jumping Run Road. | None | •191 | |
| Juniper Swamp | Approximately 500 feet upstream of Webb Mill Road | None | •112 | Town of Four Oaks, Johnston County (Unincorporated Areas). |
| | Approximately 1,650 feet upstream of Interstate 95 | None | •158 | |
| Juniper Swamp Tributary 1 | At the confluence with Juniper Swamp | None | •119 | Town of Four Oaks, Johnston County (Unincorporated Areas). |
| | Approximately 1.6 miles upstream of the confluence with Juniper Swamp. | None | •157 | |
| Juniper Swamp Tributary 2 | At the confluence with Juniper Swamp Tributary 1 | None | •132 | Town of Four Oaks, Johnston County (Unincorporated Areas). |
| | Approximately 350 feet downstream of Keen Road | None | •155 | |
| Little Bernal Branch | At the confluence with Bernal Branch | None | •155 | Johnston County (Unincorporated Areas). |
| | Approximately 0.4 mile upstream of the confluence with Bernal Branch. | None | •157 | |
| Little Black Creek | At the confluence with Black Creek | None | •191 | Johnston County (Unincorporated Areas). |
| | At the Wake/Johnston County boundary | None | •228 | |
| Little Buffalo Creek | At the confluence with Little River | •146 | •147 | Johnston County (Unincorporated Areas). |
| | Approximately 1.4 miles upstream of Meadow Road | None | •197 | |
| Little Buffalo Creek Tributary. | At the confluence with Little Buffalo Creek | None | •151 | Town of Kenly, Johnston County (Unincorporated Areas). |

| Source of flooding | Location | #Depth in feet above ground * Elevation in feet (NGVD) • Elevation in feet (NAVD) | | Communities affected |
|---|---|---|---|---|
| | | Existing | Modified | |
| | Approximately 100 feet downstream of Wilson/Johnston County boundary. | None | •169 | |
| Little Creek | Approximately 0.6 mile upstream of Shotwell Road | None | •279 | Town of Clayton, Johnston County (Unincorporated Areas). |
| | Approximately 0.6 mile downstream of the Wake/Johnston County boundary. | None | •320 | |
| Little Creek (into Middle Creek). | Approximately 0.7 mile upstream of the confluence with Middle Creek. | None | •205 | Johnston County (Unincorporated Areas). |
| | At the Wake/Johnston County boundary | None | •219 | |
| Little Creek (Basin 11, Stream 2). | At the confluence with Moccasin Creek | None | •209 | Johnston County (Unincorporated Areas). |
| | At the Wake/Johnston County boundary | None | •217 | |
| Little Creek (near Micro) | Approximately 0.4 mile upstream of Bizzell Grove Church Road. | None | •124 | Town of Micro, Johnston County (Unincorporated Areas). |
| | Approximately 0.5 mile upstream of Hawkins Road | None | •184 | |
| Little River | Approximately 0.6 mile upstream of Wayne/County boundary. | •107 | •108 | Town of Kenly, Town of Princeton, Town of Micro, Johnston County (Unincorporated Areas). |
| | At the Wake/Johnston County boundary | None | •216 | |
| Little River Tributary 1 | Approximately 0.3 mile upstream of the confluence with Little River. | None | •175 | Johnston County (Unincorporated Areas). |
| | Approximately 0.4 mile upstream of N.C. 42 | None | •213 | |
| Little Swamp Branch | At the confluence with John K. Swamp | None | •168 | Johnston County (Unincorporated Areas). |
| | Approximately 0.5 mile upstream of T Bar Road | None | •177 | |
| Long Branch | Approximately 650 feet downstream of Shoeheel Road | • 157 | • 158 | Johnston County (Unincorporated Areas). |
| | Approximately 0.7 mile upstream of N.C. 96 | None | • 212 | |
| Marks Creek | Approximately 0.8 mile downstream of Pritchard Road | None | • 159 | Town of Clayton, Johnston County (Unincorporated Areas). |
| | At the Wake/Johnston County boundary | None | • 176 | |
| McCullens Branch | Approximately 0.7 mile upstream of the confluence with Black Creek. | None | •162 | Johnston County (Unincorporated Areas). |
| | Approximately 0.5 mile upstream of Clayton Road | None | • 194 | |
| Mill Creek | Approximately 0.7 mile upstream of the confluence of Stone Creek. | None | • 105 | Johnston County (Unincorporated Areas). |
| | Approximately 0.6 mile upstream of Godwin Lake Road. | None | •193 | |
| Mill Creek (near Clayton) | At the confluence with the Neuse River | • 146 | • 145 | Town of Clayton, Johnston County (Unincorporated Areas). |
| Mill Creek (near Selma) | Approximately 0.6 miles upstream of the confluence with the Neuse River. | None | • 131 | Town of Selma, Johnston County (Unincorporated Areas). |
| Mill Creek Tributary 2 | Approximately 0.6 mile upstream of the confluence with Mill Creek. | • 96 | • 97 | Johnston County (Unincorporated Areas). |
| Mill Creek (near Tributary 3 | Approximately 0.5 mile upstream of the confluence with Mill Creek. | None | • 99 | Johnston County (Unincorporated Areas). |
| | Approximately 0.4 mile upstream of Shaws Pond Road | None | • 121 | |
| Mill Creek Tributary 4 | At the confluence with Mill Creek | None | • 115 | Johnston County (Unincorporated Areas) |
| Mill Creek Tributary 5 | At the confluence with Mill Creek | None | • 122 | Johnston County (Unincorporated Areas). |
| Mill Creek Tributary 6 | Approximately 0.6 mile upstream of Randall Chapel Road. | None | • 97 | Johnston County (Unincorporated Areas). |
| | Approximately 0.4 mile upstream of Scout Road | None | • 129 | |
| Mill Swamp Branch | At the conference with John K. Swamp | None | • 129 | |
| Mill Swamp Branch | At the confluence with John K. Swamp | None | • 163 | Johnston county (Unincorporated Areas). |
| Moccasin Creek (near Princeton). | Approximately 0.4 mile upstream of U.S. Route 70 | None | • 127 | Town of Pine Level, Town of Princeton, Johnston County (Unincorporated Areas). |
| Moccasion Creek | At the Johnston/Wilson County boundary | None | • 152 | Johnston County (Unincorporated Areas). |

| Source of flooding | Location | #Depth in feet above ground<br>* Elevation in feet (NGVD)<br>• Elevation in feet (NAVD) | | Communities affected |
|---|---|---|---|---|
| | | Existing | Modified | |
| | Approximately 800 feet downstream of Railroad. | | | |
| | At interstate 264 | None | • 219 | |
| Moccasin Creek Tributary 1 | At the confluence with of Moccasin Creek | None | • 164 | Johnson County (Unincorporated Areas). |
| Moccasin creek Tributary 2 | At the confluence with Moccasin Creek | None | • 166 | Johnston County (Unincorporated Areas). |
| Oak Creek | At the confluence with Stone Creek | None | • 112 | Johnston County (Unicorporated Areas). |
| Oak Creek Tributary | At the confluence with Oak Creek | None | • 116 | Johnston County (Unincorporated Areas). |
| | Approximately 1.2 miles upstream of the confluence with Oak Creek. | None | • 133 | Johnston County (Unincorporated Areas). |
| Pole Branch | At the confluence with Black Creek | • 147 | • 148 | Johnston County (Unincorporated Areas). |
| Polecat Branch | Approximately 1.1 miles downstream of Brogden Road | • 112 | • 113 | Town of Smithfield, Johnston County (Unincorporated Areas). |
| | Approximately 2.2 miles upstream of Brogden Road | None | • 137 | |
| Quincosin Swamp | At the confluence of Bawdy Creek and Bawdy Swamp | None | • 137 | |
| Quincosin Swamp | At the confluence of Bawdy Creek and Bawdy Swamp | None | • 110 | Johnston County (Unincorporated Areas). |
| Reedy Creek | At King Mill Road | None | • 140 | Johnston County (Unincorporated Areas). |
| Reedy Prong | At the confluence with Mill Creek | None | • 139 | Johnston County (Unincorporated Areas). |
| Reedy Prong Tributary | At the confluence with Reedy Prong | None | • 150 | Johnston County (Unincorporated Areas). |
| | Approximately 200 feet upstream of Thornton Road | None | • 162 | |
| Sams Creek | Approximately 0.7 mile upstream of the confluence with the Neuse River. | None | • 155 | Town of Clayton, Johnston County (Unincorporated Areas). |
| | Approximately 0.4 mile downstream of City Road | None | • 210 | |
| Snipes Creek | At the confluence with Little River | None | • 204 | Johnston County (Unincorporated Areas). |
| | At the Wake/Johnston County boundary | None | • 285 | |
| Spring Branch (into Little River). | At the upstream side of Princeton Kenly Road | None | • 124 | Johnston County (Unincorporated Areas). |
| | Approximately 200 feet downstream of Cuddington Road. | None | • 214 | |
| Spring Branch Tributary | At the confluence with Spring Branch (into Little River) | None | • 130 | Johnston County (Unincorporated Areas). |
| | Approximately 1.6 miles upstream of Rhodes Road | None | • 211 | |
| Stone Creek | Just upstream of U.S. Highway 701 | None | • 108 | Johnston County (Unincorporated Areas). |
| | Approximately 0.4 mile upstream of Interstate 40 | None | • 205 | |
| Stone Creek Tributary | At the confluence with Stone Creek | None | • 156 | Johnston County (Unincorporated Areas). |
| | Approximately 0.5 mile upstream of Adams Road | None | • 185 | |
| Stony Fork | Approximately 200 feet upstream of Railroad | None | • 148 | Johnston County (Unincorporated Areas). |
| | Approximately 0.6 mile upstream of Shade Tree Road | None | • 164 | |
| Stony Fork Tribuary | At the confluence with Stony Fork | None | • 153 | Johnston County (Unincorporated Areas). |
| | Approximately 300 feet upstream of Interstate 40 | None | • 179 | |

**Town of Benson**

Maps available for inspection at the Benson Town Hall, Zoning Department, 303 East Church Street, Benson, North Carolina.

Send comments to The Honorable Don Johnson, Mayor of the Town of Benson, P.O. Box 69, Benson, North Carolina 27504.

**Town of Clayton**

Maps available for inspection at the Clayton Town Hall, Planning Department, 111 East 2nd Street, Clayton, North Carolina.

Send comments to Mr. Steve Biggs, Clayton Town Manager, P.O. Box 879, Clayton, North Carolina 27520.

**Town of Four Oaks**

Maps available for inspection at the Four Oaks Town Hall, 304 North Main Street, Four Oaks, North Carolina.

Send comments to The Honorable Jack Austin, Mayor of the Town of Four Oaks, P.O. Box 158, Four Oaks, North Carolina 27524.

**Johnston County (Unincorporated Areas)**

Maps available for inspection at the Johnston County Public Utilities Office, 309 East Market Street, Smithfield, North Carolina.

Send comments to Mr. Rick Hester, Johnston County Manager, P.O. Box 1049, Smithfield, North Carolina 27577.

| Source of flooding | Location | #Depth in feet above ground<br>* Elevation in feet (NGVD)<br>• Elevation in feet (NAVD) | | Communities affected |
|---|---|---|---|---|
| | | Existing | Modified | |

**Town of Micro**

Maps available for inspection at the Micro Town Hall, 112 West Main Street, Micro, North Carolina.

Send comments to The Honorable Earl E. (Buddy) Jones, Mayor of the Town of Micro, P.O. Box 31, Micro, North Carolina 27555.

**Town of Pine Level**

Maps available for inspection at the Pine Level Town Hall, 214 North Peedin Avenue, Pine Level, North Carolina.

Send comments to The Honorable Tony Braswell, Mayor of the Town of Pine Level, P.O. Box 328, Pine Level, North Carolina 27568.

**Town of Princeton**

Maps available for inspection at the Town of Princeton Public Utilities Office, 309 East Market Street, Princeton, North Carolina.

Send comments to The Honorable Donald Rains, Mayor of the Town of Princeton, P.O. Box 128, Princeton, North Carolina 27569.

**Town of Selma**

Maps available for inspection at the Town of Selma Planning Department, 100 North Raiford Street, Selma, North Carolina.

Send comments to The Honorable Harry Blackley, Mayor of the Town of Selma, 100 North Raiford Street, Selma, North Carolina 27576.

**Town of Smithfield**

Maps available for inspection at the Smithfield Town Hall, 350 East Market Street, Smithfield, North Carolina.

Send comments to The Honorable Bill Jordan, Mayor of the Town of Smithfield, 350 East Market Street, Smithfield, North Carolina 27577.

**Town of Wilson's Mills**

Maps available for inspection at the Wilson's Mills Town Hall, 22 Fire Department Road, Wilson's Mills, North Carolina.

Send comments to The Honorable Pattie Caddell, Mayor of the Town of Wilson's Mills, P.O. Box 448, Wilson's Mills, North Carolina 27593.

**NORTH CAROLINA**
**Wayne County**

| | | | | |
|---|---|---|---|---|
| Richland Creek | Approximately 200 feet upstream of the confluence with Stoney Creek. | • 84 | • 85 | City of Goldsboro, Wayne County (Unincorporated Areas). |
| | Approximately 650 feet upstream of Highway 70 | None | • 107 | |
| Stoney Creek | At the confluence with the Neuse River | • 70 | • 71 | City of Goldsboro, Wayne County (Unincorporated Areas). |
| | Approximately 1,000 feet upstream of the confluence of Reedy Branch. | • 89 | • 90 | |
| Appletree Swamp | Approximately 500 feet downstream of the Wayne/Greene County boundary. | None | • 86 | Wayne County (Unincorporated Areas). |
| | Approximately 1.2 miles upstream of the Wayne/Greene County boundary. | None | • 99 | |
| Aycock Swamp | At the Wayne/Wilson County boundary | None | • 76 | Town of Fremont, Wayne County (Unincorporated Areas). |
| | Approximately 1.5 miles upstream of Black Creek Road. | None | • 113 | |
| Bear Creek | Approximately 0.2 mile downstream of the Wayne/Greene County boundary. | • 75 | • 76 | Wayne County (Unincorporated Areas). |
| | Approximately 150 feet downstream of Rodell Barron Road. | None | • 112 | |
| Beaverdam Creek | At the upstream side of Rosewood Road | None | • 82 | Wayne County (Unincorporated Areas). |
| | At the Wayne/Johnston County boundary | None | • 124 | |
| Beaverdam Creek 1 | At the confluence with Falling Creek | None | • 133 | Wayne County (Unincorporated Areas). |
| | Approximately 1.2 miles upstream of U.S. Route 13 | None | • 147 | |
| Mill Creek North | Approximately 0.8 mile upstream of the confluence with Little River. | • 89 | • 88 | Town of Pikeville, Wayne County (Unincorporated Areas). |
| | Approximately 0.5 mile upstream of Pikeville Princeton Road. | None | • 136 | |
| Mill Creek North Tributary 1 | At the confluence with Mill Creek North | None | • 101 | Wayne County (Unincorporated Areas) |
| | Approximately 1.2 miles upstream of the confluence with Mill Creek North. | None | •136 | |
| Mill Creek North Tributary 2 | At the confluence with Mill Creek North | None | • 102 | Wayne County (Unincorporated Areas). |
| | Approximately 0.5 mile upstream of Hinnant Road | None | • 134 | |
| Mill Creek North Tributary 3 | At the confluence with Mill Creek North | None | • 111 | Wayne County (Unincorporated Areas). |
| | Approximately 0.4 mile upstream of Nahunta Road | None | • 136 | |
| Mill Creek North Tributary 4 | At the confluence with Mill Creek North | None | •113 | Town of Pikeville. |

| Source of flooding | Location | #Depth in feet above ground<br>* Elevation in feet (NGVD)<br>• Elevation in feet (NAVD) | | Communities affected |
|---|---|---|---|---|
| | | Existing | Modified | |
| | Approximately 540 feet upstream of Nahunta Road ..... | None | •137 | |
| Mill Creek North Tributary 5 | At the confluence with Mill Creek North ..... | None | •115 | Town of Pikeville. |
| | Approximately 0.3 mile upstream of Nahunta Road ..... | None | •134 | |
| Neuse River ..... | At the Wayne/Lenoir County boundary ..... | •53 | •55 | Town of Seven Springs, City of Goldsboro, Wayne County (Unincorporated Areas). |
| | At the confluence with Mill Creek South ..... | •83 | •84 | |
| Billy Bud Creek ..... | At the confluence with Stoney Creek ..... | •89 | •90 | City of Goldsboro, Wayne County (Unincorporated Areas). |
| | Approximately 0.7 mile upstream of North Berkeley Boulevard. | None | •118 | |
| Buck Swamp ..... | At the downstream side of Nor Am Road ..... | None | •109 | Wayne County (Unincorporated Areas). |
| | Approximately 300 feet upstream of Pikeville Princeton Road. | None | •135 | |
| Button Branch ..... | Approximately 100 feet downstream of Saulston Road | None | •69 | Wayne County (Unincorporated Areas). |
| | Approximately 1,000 feet upstream of the Wayne/Greene County boundary. | None | •70 | |
| Charles Branch ..... | Approximately 0.3 mile upstream of the confluence with Beaverdam Creek. | None | •82 | Wayne County (Unincorporated Areas). |
| | Approximately 1.7 miles upstream of the confluence with Beaverdam Creek. | None | •92 | |
| Falling Creek ..... | At the confluence of the Neuse River ..... | •83 | •84 | Wayne County (Unincorporated Areas). |
| | Approximately 850 feet upstream of South Jordans Chapel Road. | None | •137 | |
| Great Swamp ..... | Approximately 500 feet downstream of the Wayne/Wilson County boundary. | None | •97 | Wayne County (Unincorporated Areas). |
| | At the Wayne/Johnston County boundary ..... | None | •160 | |
| Great Swamp Tributary 1 ... | At the Wayne/Wilson County boundary ..... | None | •93 | Town of Fremont, Wayne County (Unincorporated Areas). |
| | Approximately 1.6 miles upstream of the Wayne/Wilson County boundary. | None | •115 | |
| Great Swamp Tributary 2 ... | At the confluence with Great Swamp ..... | None | •99 | Town of Fremont, Wayne County (Unincorporated Areas). |
| | Approximately 1.4 miles upstream of the confluence with Great Swamp. | None | •110 | |
| Great Swamp Tributary 3 ... | At the confluence with Great Swamp ..... | None | •125 | Wayne County (Unincorporated Areas). |
| | Approximately 0.5 mile upstream of Atlantic Road ..... | None | •156 | |
| Great Swamp Tributary 4 ... | At the confluence with Great Swamp ..... | None | •129 | Wayne County (Unincorporated Areas). |
| | Approximately 0.6 mile upstream of Joe Morris Road .. | None | •138 | |
| Howells Branch ..... | Approximately 850 feet upstream of East Patetown Road. | None | •106 | City of Goldsboro, Wayne County (Unincorporated Areas). |
| | Approximately 130 feet upstream of Tommys Road ..... | None | •113 | |
| Ivy Branch ..... | At the Wayne/Wilson County boundary ..... | None | •68 | Wayne County (Unincorporated Areas). |
| | Approximately 1.3 miles upstream of St. James Church Road. | None | •87 | |
| Juniper Swamp ..... | At the confluence with Great Swamp ..... | None | •103 | Wayne County (Unincorporated Areas). |
| | Approximately 0.2 mile upstream of the confluence with White Oak Swamp. | None | •117 | |
| Lee Branch ..... | Approximately 200 feet upstream of McKee Oil Company Road. | None | •142 | Town of Mount Olive, Wayne County (Unincorporated Areas) |
| | Approximately 0.3 mile upstream of Hatchs Hill Lane ... | None | •148 | |
| Mills Creek ..... | Approximately 0.2 mile upstream of Highway 13 ..... | None | •115 | City of Goldsboro, Wayne County (Unincorporated Areas). |
| | Approximately 1.5 miles upstream of Highway 13 ..... | None | •124 | |

| Source of flooding | Location | #Depth in feet above ground<br>* Elevation in feet (NGVD)<br>• Elevation in feet (NAVD) | | Communities affected |
|---|---|---|---|---|
| | | Existing | Modified | |
| Nahunta Swamp | At State Highway 581 | None | •124 | Wayne County (Unincorporated Areas). |
| | Approximately 0.7 mile upstream of Old Kenley Road | None | •136 | |
| Nahunta Swamp Tributary | Approximately 1,500 feet upstream of the confluence with Nahunta Swamp. | None | •88 | Wayne County (Unincorporated Areas). |
| | Approximately 0.3 mile upstream of St. Highway 222 | None | •108 | |
| Stoney Creek Tributary | Approximately 100 feet upstream of Stoney Creek Church Road. | None | •109 | Wayne County (Unincorporated Areas). |
| | Approximately 0.4 mile upstream of Stoney Creek Church Road. | None | •113 | |
| Thorough Fare Swamp | Downstream side of Grantham School Road | None | •123 | Wayne County (Unincorporated Areas). |
| | Approximately 1.7 miles upstream of Odom Mill Road | None | •152 | |
| Thunder Swamp | At the downstream side of Old Smith Chapel Road | None | •137 | Town of Mount Olive, Wayne County (Unincorporated Areas). |
| | At the upstream side of Daughery Field Road | None | •160 | |
| Thunder Swamp Tributary | The upstream side of Highway 55 | None | •150 | Town of Mount Olive, Wayne County (Unincorporated Areas). |
| | Approximately 0.7 mile upstream of Highway 55 | None | •157 | |
| Turner Swamp | At the Wayne/Wilson County boundary | None | •77 | Town of Eureka, Wayne County (Unincorporated Areas). |
| | Approximately 0.4 mile downstream of North Church Street. | None | •104 | |
| Walnut Creek | At the confluence with the Neuse River | •58 | •60 | City of Goldsboro, Village of Walnut Creek, Wayne County (Unincorporated Areas). |
| | Approximately 0.7 mile upstream of Miller Chapel Road. | None | •116 | |
| Walnut Creek Tributary D | At the confluence with Walnut Creek | None | •98 | Wayne County (Unincorporated Areas). |
| | Approximately 0.7 mile upstream of Powell Road | None | •105 | |
| Watery Branch | Approximately 250 feet downstream of the Wayne/Greene County. | None | •73 | Town of Eureka, Wayne County (Unincorporated Areas). |
| | Approximately 2.5 miles upstream of Old Mill Road | None | •108 | |
| Yellow Marsh Branch | Approximately 180 feet upstream of railroad | None | •155 | Wayne County (Unincorporated Areas). |
| | Approximately 0.3 mile upstream of railroad | None | •157 | |
| White Oak Swamp | At the confluence with Juniper Swamp | None | •113 | Wayne County (Unincorporated Areas). |
| | Approximately 0.5 mile upstream of Juniper Swamp | None | •122 | |
| Contentnea Creek | Approximately 0.8 mile upstream of Highway 58 | None | •62 | Wayne County (Unincorporated Areas). |
| | At the downstream side of Highway 222 | None | •64 | |
| Mill Creek (South) | At the confluence with the Neuse River | •84 | •83 | Wayne County (Unincorporated Areas). |
| | Approximately 800 feet upstream of the confluence with the Neuse River. | •84 | •83 | |
| Reedy Branch | At the confluence of Stoney Creek | •89 | •90 | City of Goldsboro, Wayne County (Unincorporated Areas). |
| | Approximately 2,500 feet upstream of the confluence with Stoney Creek. | •89 | •90 | |
| Big Ditch | At the confluence with the Neuse River | •73 | •74 | City of Goldsboro. |
| | Approximately 0.3 mile upstream of U.S. Highway 70 | None | •119 | |
| Little River | At the confluence with Neuse River | •73 | •74 | City of Goldsboro. |
| | Approximately 0.3 mile upstream of Stevens Mill Road | •74 | •75 | |
| Burden Creek | At the confluence with Moccasin Creek | •83 | •84 | Wayne County (Unincorporated Areas). |
| | Approximately 750 feet upstream of the confluence with Moccasin Creek. | •83 | •84 | |
| Moccasin Creek | At the confluence with the Neuse River | •83 | •84 | Wayne County (Unincorporated Areas). |
| | At the Johnston/Wayne County boundary | •83 | •84 | |

| Source of flooding | Location | #Depth in feet above ground * Elevation in feet (NGVD) • Elevation in feet (NAVD) | | Communities affected |
|---|---|---|---|---|
| | | Existing | Modified | |
| Sleepy Creek | At the confluence with the Neuse River | •62 | •65 | Wayne County (Unincorporated Areas). |
| | Approximately 0.9 mile upstream of the confluence with the Neuse River. | •62 | •65 | |

**Town of Eureka**

Maps available for inspection at the Eureka Town Hall, 103 West Main Street, Eureka, North Carolina.

Send comments to The Honorable Randy Bass, Mayor of the Town of Eureka, P.O. Box 3150, Eureka, North Carolina 27830.

**Town of Fremont**

Maps available for inspection at the Fremont Town Hall, 202 North Goldsboro Street, Fremont, North Carolina.

Send comments to The Honorable Floyd A. Evans, Mayor of the Town of Fremont, P.O. Box 818, Fremont, North Carolina, 27830.

**City of Goldsboro**

Maps available for inspection at the City of Goldsboro Engineering Department, 222 North Center Street, Goldsboro, North Carolina.

Send comments to Mr. Richard M. Slozak, Goldsboro City Manager, P.O. Drawer A, Goldsboro, North Carolina 27530.

**Town of Pikeville**

Maps available for inspection at the Pikeville Town Hall, 112 Southwest Railroad Street, Pikeville, North Carolina.

Send comments to The Honorable Tony Medlin, Mayor of the Town of Pikeville, P.O. Box 9, Pikeville, North Carolina, 27863.

**Town of Seven Springs**

Maps available for inspection at the Seven Springs Town Hall, 508 Church Street, Seven Springs, North Carolina.

Send comments to The Honorable Jewel Kilpatrick, Mayor of the Town of Seven Springs, P.O. Box 198, Seven Springs, North Carolina 28578.

**Unincorporated Areas of Wayne County**

Maps available for inspection at the Wayne County Planning Department, 224 East Walnut Street, Goldsboro, North Carolina.

Send comments to Mr. Lee Smith, Wayne County Manager, P.O. Box 227, Goldsboro, North Carolina 27533–0227.

**Village of Walnut Creek**

Maps available for inspection at the Walnut Creek County Club, 508 Lake Shore Drive, Goldsboro, North Carolina.

Send comments to The Honorable Ken Ritt, Mayor of the Village of Walnut Creek, P.O. Box 10911, Goldsboro, North Carolina 27534.

**PENNSYLVANIA**
**Lycoming County**

| | | | | |
|---|---|---|---|---|
| Gregs Run | Approximately 523 feet upstream of the confluence with Sugar Run. | •561 | •560 | Township of Wolf. |
| | Approximately 75 feet downstream of Gregs Run Road (Township Route 270). | •575 | •574 | |
| Mill Creek No. 2 | Approximately 150 feet upstream of State Route 87 | •544 | •543 | Township of Fairfield. |
| | Approximately 1,750 feet upstream of State Route 87 | •550 | •549 | |

**Township of Fairfield**

Maps available for inspection at the Fairfield Township Office, 238 Fairfield Church Road, Montoursville, Pennsylvania.

Send comments to Mr. Robert Wein, Chairman of the Township of Fairfield Board of Supervisors, 141 Signal Hill Road, Montoursville, Pennsylvania 17754.

**Township of Wolf**

Maps available for inspection at the Wolf Township Office, 695 Route 405 Highway, Hughesville, Pennsylvania.

Send comments to Mr. Gene M. Cahn, Chairman of the Township of Wolf Board of Supervisors, 695 Route 405 Highway, Hughesville, Pennsylvania 17737.

(Catalog of Federal Domestic Assistance No. 83.100, ''Flood Insurance.'')

Dated: November 18, 2003.

**Anthony S. Lowe,**

*Mitigation Division Director, Emergency Preparedness and Response Directorate.*

[FR Doc. 03–29795 Filed 11–28–03; 8:45 am]

BILLING CODE 9110–12–P

## DEPARTMENT OF TRANSPORTATION

## Research and Special Programs Administration

## 49 CFR Part 192

**[Docket No. RSPA–03–16330; Notice 4]**

**RIN 2137–AB71**

## Pipeline Safety: Passage of Internal Inspection Devices

**AGENCY:** Research and Special Programs Administration (RSPA), DOT.

**ACTION:** Request for information.

**SUMMARY:** On April 12, 1994, RSPA issued a regulation requiring pipeline operators to design and construct certain new transmission lines and certain existing line sections that contain replaced pipe or components to accommodate the passage of instrumented internal inspection devices. Responding to petitions for reconsideration, we suspended enforcement on some facilities and invited comments on proposed changes to the regulation. To help us reach a

final decision on the petitions and issues raised by commenters, this notice seeks responses to the questions stated below under **SUPPLEMENTARY INFORMATION** concerning offshore gas transmission lines.

**DATES:** Persons interested in submitting written responses to the questions posed in this document must do so by December 31, 2003.

**ADDRESSES:** You may submit written responses by mailing or delivering an original and two copies to the Dockets Facility, U.S. Department of Transportation, Room PL–401, 400 Seventh Street, SW., Washington, DC 20590–0001. The Dockets Facility is open from 10 a.m. to 5 p.m., Monday through Friday, except on Federal holidays when the facility is closed. Alternatively, you may submit written responses to the docket electronically at the following Web address: *http://dms.dot.gov.* All written responses should identify the docket and notice numbers stated in the heading of this notice. Anyone who wants confirmation of mailed responses must include a self-addressed stamped postcard. To file written responses electronically, after logging on to *http://dms.dot.gov*, click on ''Comment/Submissions.'' You can also read all responses in the docket at *http://dms.dot.gov.*

The previous record of this proceeding is in Docket No. PS–126. You can read comments and other material in this docket at the Nassif Building, U.S. Department of Transportation, Room 7128, 400 Seventh Street, SW., Washington, DC 20590–0001. For access to this docket, please call Jenny Donohue at (202) 366–4046.

Anyone is able to search the electronic form of all comments received into any of our dockets by the name of the individual submitting the comment (or signing the comment, if submitted on behalf of an association, business, labor union, etc.). You may review DOT's complete Privacy Act Statement in the **Federal Register** published on April 11, 2000 (Volume 65, Number 70; Pages 19477–78) or you may visit *http://dms.dot.gov.*

**FOR FURTHER INFORMATION CONTACT:** L. M. Furrow by phone at 202–366–4559, by fax at 202–366–4566, by mail at U.S. Department of Transportation, 400 Seventh Street SW., Washington, DC 20590, or by e-mail at *buck.furrow@rspa.dot.gov.*

**SUPPLEMENTARY INFORMATION:**

**Background**

Following Congressional mandates,[1] RSPA published regulations (49 CFR 192.150 and 195.120) requiring that, except where impracticable, operators of gas and hazardous liquid pipelines must design and construct certain pipelines to accommodate the passage of instrumented internal inspection devices, or smart pigs (59 FR 17281; Apr. 12, 1994). In response to petitions for reconsideration from the American Gas Association and the Interstate Natural Gas Association of America (INGAA), we proposed to modify provisions of § 192.150 that apply to offshore transmission lines and that require removal of smart pig obstructions from transmission line sections (59 FR 49896; Sept. 30, 1994). In addition, pending completion of the rulemaking, we suspended enforcement of § 192.150 on offshore transmission lines and on onshore transmission line sections except replacement parts (60 FR 7133; Feb. 7, 1995).

One of the issues raised by INGAA's petition and by comments on the proposed modification of § 192.150 concerns the applicability of § 192.150 to new offshore transmission lines 10 inches or larger. INGAA and industry commenters strongly suggested the rule should exempt all offshore transmission lines. The reasons were increased design and construction costs and lack of benefits. In addition, the Technical Pipeline Safety Standard Committee, RSPA's advisory committee on proposed gas pipeline safety standards, supported industry's view at a meeting in Washington, DC, on May 2, 1995.

In contrast, operators of hazardous liquid pipelines did not object to the similar pig-passage rule in § 195.120 that applies to offshore pipelines 10 inches or larger. And the Marine Board, in a 1994 study jointly sponsored by RSPA and the Minerals Management Service, ''Improving the Safety of Marine Pipelines,'' recommended that ''[n]ew medium-to large-diameter pipelines running from platform to platform or platform to shore should be designed to accommodate smart pigs whenever reasonably practical.'' (The study is available at *http://books.nap.edu/books/0309050472/html/.*)

**Questions**

In light of this background and the considerable time since persons submitted written comments on the proposed changes to § 192.150, we have the following questions:

—Do operators of offshore gas transmission lines still object to applying § 192.150 to new offshore transmission lines 10 inches or larger?

—If the answer is yes, given that new hazardous liquid pipelines 10 inches or larger are meeting § 195.120, what differences are there between gas and liquid pipeline design and construction practices that would justify exempting new offshore gas transmission lines 10 inches or larger from § 192.150?

—Regarding the Marine Board's recommendation, when would it not be ''reasonably practical'' to design new gas transmission lines 10 inches or larger running between platforms or platforms and shore to accommodate the passage of smart pigs?

Issued in Washington, DC, on November 24, 2003.

**Stacey L. Gerard,**

*Associate Administrator for Pipeline Safety.*

[FR Doc. 03–29853 Filed 11–28–03; 8:45 am]

BILLING CODE 4910–59–P

[1] Sections 108(b) and 207(b) of the Pipeline Safety Reauthorization Act of 1988 (Pub. L. 100–561; Oct. 31, 1988).

---

## DEPARTMENT OF TRANSPORTATION

## Research and Special Programs Administration

## 49 CFR Parts 192 and 195

**[Docket No. RSPA–98–4868 (gas), Notice 3; and RSPA–03–15864 (liquid), Notice 1]**

## Gas and Hazardous Liquid Gathering Lines

**AGENCY:** Research and Special Programs Administration (RSPA), DOT.

**ACTION:** Notice of public meeting and request for comments.

**SUMMARY:** This document announces a public meeting and an opportunity to submit written comments on the safety regulation of gas and hazardous liquid gathering lines. Congress has directed RSPA to define ''gathering line'' for gas and hazardous liquid pipeline transportation and, if appropriate, define as ''regulated gathering line'' those rural gathering lines that, because of specific physical characteristics, should be regulated. The gas pipeline regulations do not clearly distinguish gathering lines from production facilities and transmission lines. This lack of clarity has caused many disputes between government and industry over whether the regulations cover particular pipelines. The current definition of hazardous liquid gathering has worked

well. We will consider all public comments in developing future proposals on gathering lines.

**DATES:** The deadline for submitting written comments is January 17, 2004. The public meeting will occur Tuesday, December 16, 2003, from 8:30 am to 4:30 pm, and Wednesday, December 17, 2003, from 8:30 am to 4:30 p.m.

**ADDRESSES:** The meeting will take place at the Anchorage Marriott Downtown, 820 W. 7th Ave., Anchorage, AK 99506 phone: (907) 279–8000. You may participate in the meeting by making oral or written comments about any of the topics discussed in this notice. You may also submit written comments directly to the dockets by any of the following methods:

- Mail: Dockets Facility, U.S. Department of Transportation, Room PL–401, 400 Seventh Street SW., 20590–0001. Anyone wanting confirmation of mailed comments must include a self-addressed stamped postcard.
- Hand delivery or courier: Room PL–401, 400 Seventh Street, SW., Washington, DC. The Dockets Facility is open from 10 am to 5 pm, Monday through Friday, except Federal holidays.
- Web site: Go to *http://dms.dot.gov,* click on ''Comment/Submissions'' and follow instructions at the site.

Further instructions about the meeting and submission of written comments are under the Public Participation heading of the **SUPPLEMENTARY INFORMATION** section of this notice.

*Docket access.* For copies of this notice or other material in the docket, you may contact the Dockets Facility by phone (202) 366–9329 or visit the facility at the above street address. For Web access to the dockets to read and download filed material, go to *http://dms.dot.gov/search.* Then type in the last four digits of the gas or liquid docket number shown in the heading of this notice, and click on ''Search.'' A transcript of the meeting should be available in the dockets about 3 weeks after the meeting.

**FOR FURTHER INFORMATION CONTACT:** DeWitt Burdeaux by phone at (405) 954–7220 or by e-mail at *dewitt_burdeaux@tsi.jccbi.gov* regarding the subject matter of this notice.

**SUPPLEMENTARY INFORMATION:**

## Public Participation

*Oral comments.* Anyone who wants to make an oral presentation at the meeting should notify Janice Morgan by December 5, 2003, by phone, (202) 366–2392, or by e-mail; *janice.morgan@rspa.dot.gov.* Please state the topic of your presentation and the amount of time requested. If necessary, the presiding officer may limit the time for oral presentations so that everyone who requests an opportunity to speak may do so. Those who do not request time for presentations in advance may have an opportunity to speak as time allows. On Tuesday, December 16, 2003, the agenda for the meeting will focus on gas gathering and on Wednesday, December 17, 2003, liquid gathering.

*Written comments.* The deadline for submitting written comments to the dockets is January 17, 2004. Late filed comments will be considered as far as practicable. All written comments should identify the gas or liquid docket number and notice number stated in the heading of this notice. Written comments submitted at the meeting will be included in the meeting transcript or filed in the dockets.

*Privacy Act Information.* Anyone can search the electronic form of all comments filed in any of our dockets by the name of the individual submitting the comment (or signing the comment, if submitted for an association, business, labor union, etc.). You may review DOT's complete Privacy Act Statement in the April 11, 2000 issue of the **Federal Register** (65 FR 19477) or go to *http://dms.dot.gov.*

*Individuals with Disabilities.* For information on facilities or services for individuals with disabilities, or to request special assistance at the meeting, contact Janice Morgan by phone, (202) 366–2392, or by e-mail: *janice.morgan@rspa.dot.gov.*

## Background

*Gas Gathering Line Definition.* RSPA's gas pipeline safety regulations in 49 CFR part 192 apply to pipelines used in the gathering, transmission, or distribution of gas, except gathering lines in rural locations and certain offshore pipelines (§ 192.1). As defined in § 192.3, ''gathering line'' means ''a pipeline that transports gas from a current production facility to a transmission line or main.'' Although part 192 does not define ''production facility,'' it does define ''transmission line'' and ''main.'' However, under § 192.3, the definition of ''transmission line'' refers to a pipeline ''other than a gathering line.'' Also, the definition of ''main'' refers to ''distribution line,'' which means a ''pipeline other than a gathering or transmission line.''

The absence of a production facility definition and the circular logic of the definitions of gathering line, transmission line, and distribution line have made it difficult to determine the beginning and end of gathering lines covered by part 192. It is also difficult to determine which pipelines are exempt from part 192 as rural gathering lines. Inspectors from RSPA-s five regional offices have often disagreed with pipeline operators across the nation over whether pipelines are gathering or transmission lines. In 1986, RSPA asked the National Association of Pipeline Safety Representatives (NAPSR) for comments on the gathering line problem. Responses from NAPSR members showed that in the 30 States where gathering lines exist, there are at least 2,800 gathering operators and 111,000 miles of gathering lines (as interpreted by the States). NAPSR members from five States, with about 54 percent of gathering-line operators and 75 percent of the mileage, said they had disagreements with operators over classifying rural pipelines as gathering lines or transmission lines. Members from three of these States said the disagreements were too numerous to list. One NAPSR member recalled many disagreements with two major gas gathering and transmission pipeline operators over where a gathering line ends. Another NAPSR member related continuing disagreements over the classification of various segments of pipeline operated by one of the largest gas gathering line operators in the United States.

The difficulty of identifying gas gathering lines not only affects government enforcement of the part 192 safety standards, but it also affects other program areas. RSPA annually collects user fees from gas pipeline operators to recoup regulatory program costs. However, by law, these fees are only assessable for costs related to transmission lines. In addition, the Pipeline Safety Improvement Act of 2002 (Pub. L. 107–355; Dec. 17, 2002) requires operators to provide to RSPA, certain geospatial data and other information for use in the National Pipeline Mapping System. However, gathering and distribution lines are specifically excluded from this requirement.

Seeking to resolve the gas gathering line interpretive problem, RSPA proposed to amend part 192 gathering line definition (Docket PS–122; 56 FR 48505; Sept. 25, 1991).[1] However,

[1] The proposal was: ''Gathering line'' means, except as provided in paragraph (4), any pipeline or part of a connected series of pipelines used to transport gas from a well or the first production facility where gas is separated from produced hydrocarbons, whichever is farther downstream, to an applicable endpoint described in paragraph (1), (2), or (3) below:

(1) The inlet of the first natural gas processing plant used to remove liquefied petroleum gases or other natural gas liquids.

because the public response was generally unfavorable, with industry commenters disputing the significance of the problem and alleging wholesale reclassification of lines, RSPA delayed final action pending the collection and consideration of further information. Meanwhile, Congress amended the pipeline safety law, directing RSPA to define the term ''gathering line'' for both gas and hazardous liquid pipelines, and define as ''regulated gathering line'' those rural gathering lines that, because of specific physical characteristics, should be regulated.[2] In furtherance of the proceeding begun in 1991 and the Congressional directive, RSPA opened an internet discussion of the gathering line issue, which focused on a definition offered by Gas Processors Association (Docket No. RSPA–98–4868; 64 FR 12147; Mar. 11, 1999). The discussion, which involved 100 participants, included a comprehensive treatment by the American Petroleum Institute for a coalition of trade associations.[3] However, RSPA and NAPSR were concerned that the coalition's suggested gathering line definition was based on certain ''furthermost downstream'' points that are subject to change. As a stopgap, while continuing to decide on a suitable alternative to the 1991 gathering line proposal, RSPA published an advisory bulletin interpreting the end of gas gathering based on court precedent and historical interpretation (ADB–02–06; 67 FR 64447; Oct.18, 2002).[4]

*Hazardous Liquid Gathering Line Definition.* RSPA's hazardous liquid pipeline safety regulations in 49 CFR part 195 apply to the transportation by pipeline of hazardous liquid (petroleum, petroleum products, and anhydrous ammonia) and carbon dioxide (in a supercritical state), except gathering lines in rural areas and certain other pipelines (§ 195.1). The term ''gathering line'' is defined in § 195.2 as ''a pipeline 219.1 mm (8⅝ in) or less nominal outside diameter that transports petroleum from a production facility.'' Section 195.2 also defines ''production facility'' and ''rural area'' without reference to the gathering line definition. RSPA has had little difficulty applying these definitions to identify gathering lines subject to part 195 or those excluded from part 195 because of location in rural areas.

## Purpose of Meeting and Request for Comment

RSPA, working with NAPSR, is continuing to assess the acceptability of the present definitions of gas and hazardous liquid gathering lines and related definitions for purposes of determining the beginning and end of gathering. We are particularly concerned about the impreciseness of the gas definition. We are inviting new public input to this process, which we hope will be informed by the history of previously proposed definitions and their shortcomings.

We also are considering the need to establish safety regulations for onshore gas and hazardous liquid gathering lines in rural areas. While Congress initially exempted these lines from Federal regulation, it has granted DOT/RSPA authority to regulate rural gathering lines whose physical characteristics pose a special risk to the public. We are interested in receiving ideas on what situations would make it appropriate to regulate the safety of rural gathering lines, and what those regulations should be. Potential commenters should keep in mind that the pipeline industry's consensus standards in *ASME B31.4* and *ASME B31.8* apply to rural gathering lines.

We are especially interested in receiving comments on the following:

(1) The point where gas production ends and gas gathering begins.

OPS considers the termination of gas gathering to be: (1) The outlet of a processing plant that extracts heavy ends from the natural gas; (2) The outlet of a pipeline compressor (not including a well head compressor); (3) The point where two or more well pipelines converge; or (4) The point where there is a change in ownership of the pipeline.

(2) If there is no natural gas processing plant, the point where custody of the gas is transferred to others who transport it by pipeline to:

(i) a distribution center;

(ii) a gas storage facility; or

(iii) an industrial consumer.

(3) If there is no natural gas processing plant or point where custody of the gas is so transferred, the last point downstream where gas produced in the same production field or two adjacent production fields is commingled.

(4) A gathering line does not include any part of a pipeline that transports gas downstream—(i) from the end points in (1), (2), or (3) in this section; (ii) from a production facility, if no end point exists; or (iii) in any interstate transmission facility subject to the jurisdiction of the Federal Energy Regulatory Commission under the Natural Gas Act (15 U.S.C. 717 *et seq.*).

[2] The specific provisions are in 49 U.S.C. 60101(b): Gathering Lines.—(1)(A) Not later than October 24, 1994, the Secretary shall prescribe standards defining the term ''gathering line''. (B) In defining ''gathering line'' for gas, the Secretary—(i) shall consider functional and operational characteristics of the lines to be included in the definition; and (ii) is not bound by a classification the Commission establishes under the Natural Gas Act (15 U.S.C. 717 *et seq.*). (2)(A) Not later than October 24, 1995, the Secretary, if appropriate, shall prescribe standards defining the term ''regulated gathering line''. In defining the term, the Secretary shall consider factors such as location, length of line from the well site, operating pressure, throughput, and the composition of the transported gas or hazardous liquid, as appropriate, in deciding on the types of lines that functionally are gathering but should be regulated under this chapter because of specific physical characteristics. (B)(i) The Secretary also shall consider diameter when defining ''regulated gathering line'' for hazardous liquid. (ii) The definition of ''regulated gathering line'' for hazardous liquid may not include a crude oil gathering line that has a nominal diameter of not more than 6 inches, is operated at low pressure, and is located in a rural area that is not unusually sensitive to environmental damage.

[3] The coalition suggested the following definition of ''gathering line'': (a) means any pipeline or part of a connected series of pipelines used to

(1) transport gas from the furthermost downstream point in a production operation to the furthermost downstream of the following endpoints, with possible intermediate deliveries to other production operations, pipeline facilities, farm taps, or residential/commercial/industrial end users: (A) the inlet of the furthermost downstream natural gas processing plant, other than a natural gas processing plant located on a transmission line, (B) the outlet of the furthermost downstream gathering line gas treatment facility, (C) the furthermost downstream point where gas produced in the same production field or separate production fields is commingled, (D) the outlet of the furthermost downstream compressor station used to lower gathering line operating pressure to facilitate deliveries into the pipeline from production operations or to increase gathering line pressure for delivery to another pipeline, or (E) the connection to another pipeline downstream of: (i) the furthermost downstream endpoint identified in (A), (B), (C) or (D), or (in the absence of such endpoint) (ii) the furthermost downstream production operation; or

(2) transport gas from a point other than in a production operation exclusively to points in or adjacent to one or more production operations or gathering facility sites for use as fuel, gas lift, or gas injection gas within those operations; and (b) does not include a natural gas processing plant.

[4] ADB–02–06:

To: Owners and Operators of Natural Gas Pipeline Facilities.

Subject: Standards for classifying natural gas gathering lines.

Purpose: To inform operators of the standards OPS currently uses to classify natural gas gathering lines.

Advisory: Standards for classification of natural gas gathering lines.

Until OPS completes its rulemaking to better define natural gas gathering lines (Docket No. RSPA–98–4868), OPS will continue to classify lines according to the four-point standard established through court precedent and historical interpretation. OPS will also continue to classify lines that pose unique difficulties of classification on a case-by-case basis. In brief, in the most common situation, gathering begins at or near the well head. In most cases, the gathering process terminates at the outlet of a processing plant. A processing plant is defined by the extraction of heavy ends from the natural gas. If there is no upstream processing plant, the gathering process terminates at the outlet of a pipeline compressor. For the purposes of determining the termination point of the gas gathering process, OPS does not consider a well head compressor (field compressor) to be a pipeline compressor. If there is no processing plant or pipeline compressor, the point at which the gathering process ends is where two or more well pipelines converge. If none of these points applies, the gas gathering termination point is where there is a change in ownership of the pipeline. These points are determined on a case-by-case basis considering the location of the pipeline in relation to population density, major traffic areas, and environmentally sensitive areas. To summarize,

(2) The point where gas gathering ends and gas transmission or distribution begins.

(3) In defining ''regulated gathering line,'' whether we should consider factors besides those that Congress specified (*see* footnote 2). For example, should we consider population density (by census or house count), or for hazardous liquid lines, potential for environmental damage.

(4) Whether part 195 should apply to rural gathering lines that operate at more than 20 percent of specified minimum yield strength, or that could adversely affect an ''unusually sensitive area'' as defined in § 195.6. (Note that certain crude oil gathering lines are, by law, exempt from safety regulation (*see* footnote 2)).

(5) If you recommend safety regulations for rural gas or hazardous liquid gathering lines, to which rural lines would the regulations apply and why, approximately how many miles would be covered by the regulations, and what would be the estimated cost per mile of complying with the regulations.

(6) The approximate mileage of rural gathering lines not now covered by part 195.

(7) Whether safety regulations for gas or hazardous liquid rural gathering lines operating at low stress (*e.g.*, 20 percent or less of specified minimum yield strength) or a specified pressure for plastic lines should be fewer and possibly less stringent than regulations for other rural gathering lines.

There will be an open session for questions and answers before the close of the meeting.

In an earlier notice (68 FR 62555; Nov. 5, 2003), we announced that a public meeting on the regulation of gathering lines would be held in Austin, Texas on November 19 and 20 at the Omni Austin Hotel. That notice set December 19, 2003, as the deadline for submitting written comments to Docket No. RSPA–98–4868. However, as provided in the present notice, the deadline is now January 17, 2004. Additional meetings are being planned, and dates and places will be announced in future notices.

**Authority:** 49 U.S.C. Chapter 601 and 49 CFR 1.53.

Issued in Washington, DC, on November 18, 2003.

**Stacey L. Gerard,**

*Associate Administrator for Pipeline Safety.*

[FR Doc. 03–29394 Filed 11–28–03; 8:45 am]

BILLING CODE 4910–60–P

---

## DEPARTMENT OF COMMERCE

## National Oceanic and Atmospheric Administration

## 50 CFR Part 660

**[I.D. 102903C]**

**RIN 0648–AP42**

## Fisheries Off West Coast States and in the Western Pacific; Highly Migratory Species; Correction

**AGENCY:** National Marine Fisheries Service (NMFS), National Oceanic and Atmospheric Administration (NOAA), Commerce.

**ACTION:** Correction to notice of availability of a fishery management plan.

**SUMMARY:** This document corrects the phone number for the Pacific Fishery Management Council (Council) in the notice of availability of the Highly Migratory Species Fishery Management Plan (FMP), which was published November 6, 2003.

**SUPPLEMENTARY INFORMATION:**

### Background

The notice of availability of the Highly Migratory Species Fishery Management Plan was published in the **Federal Register** on November 6, 2003 (68 FR 62763), and requested comments by January 5, 2004. The interested public was directed to obtain a copy of the FMP) from the Council, but the Council's former phone number was cited, not its current phone number.

### Correction

In the **FOR FURTHER INFORMATION CONTACT** section of the Notice of Availability FR Doc. 03–27994, in the issue of Thursday, November 6, 2003, (68 FR 62763), make the following correction.

On page 62764, in the first column under **FOR FURTHER INFORMATION CONTACT**, delete the phone number for the Pacific Fishery Management Council and replace it with the following phone number:''503–820–2280''.

**Authority:** 16 U.S.C. 1801 *et. seq.*

Dated: November 24, 2003.

**Bruce C. Morehead,**

*Acting Director, Office of Sustainable Fisheries, National Marine Fisheries Service.*

[FR Doc. 03–29830 Filed 11–28–03; 8:45 am]

BILLING CODE 3510–22–S

# Notices

Federal Register

Vol. 68, No. 230

Monday, December 1, 2003

This section of the FEDERAL REGISTER contains documents other than rules or proposed rules that are applicable to the public. Notices of hearings and investigations, committee meetings, agency decisions and rulings, delegations of authority, filing of petitions and applications and agency statements of organization and functions are examples of documents appearing in this section.

## DEPARTMENT OF AGRICULTURE

### Commodity Credit Corporation

### Notice of Request for Extension and Revision of Currently Approved Information Collections

**AGENCY:** Commodity Credit Corporation, USDA.

**ACTION:** Notice and request for comments.

**SUMMARY:** In accordance with the Paperwork Reduction Act of 1995, this notice announces the Commodity Credit Corporation's (CCC) intention to request an extension for, and revision to, currently approved information collections in support of the regulations governing the foreign donation of agricultural commodities under the section 416(b) and Food for Progress programs, and the McGovern-Dole International Food for Education and Child Nutrition Program, based on re-estimates.

**DATES:** Comments on this notice must be received by January 30, 2004.

**ADDITIONAL INFORMATION OR COMMENTS:** Contact William S. Hawkins, Director, Program Administration Division, Foreign Agricultural Service, U.S. Department of Agriculture, Stop 1031, Washington, DC 20250–1031, telephone (202) 720–3241 or e-mail at *william.hawkins@fas.usda.gov.*

**SUPPLEMENTARY INFORMATION:**

*Title:* Foreign Donation of Agricultural Commodities (Foreign Donation) and McGovern-Dole International Food for Education and Child Nutrition Program (Food for Education).

*OMB Number:* 0551–0035: Foreign Donation of Agricultural Commodities and 0551–0039: McGovern-Dole International Food for Education and Child Nutrition Program. These will be combined into OMB Number 0551–0035 if this request is approved.

*Expiration Date of Approval:* (0551–0035) February 29, 2004 and (0551–0039) June 30, 2006.

*Type of Request:* Extension and revision of currently approved information collections, with change to combine 0551–0035 (Foreign Donation) and 0551–0039 (Food for Education).

*Abstract:* Under both Foreign Donation of Agricultural Commodities and the McGovern-Dole International Food for Education and Child Nutrition Program, information will be gathered from applicants desiring to receive grants under the programs to determine the viability of requests for resources to implement activities in foreign countries. Applicants that receive grants must submit compliance reports until commodities or local currencies generated from the sale thereof are utilized. Shipping agents must submit information and certifications regarding their activities and affiliations. Documents are used to develop effective grant agreements and assure statutory requirements and objectives are met.

*Estimate of Burden:* The public reporting burden for each respondent resulting from information collection under the Foreign Donation Program or the Food for Education Program varies in direct relation to the number and type of agreements entered into by such respondent. The estimated average reporting burden for the Foreign Donation of Agricultural Commodities is 11 hours per response and for the Food for Education Program is 11 hours per response.

*Respondents:* U.S. private voluntary organizations, U.S. cooperatives, foreign governments, shipping agents, ship owners and brokers, and survey companies.

*Estimated Number of Respondents:* 241 per annum.

*Estimated Number of Responses per Respondent:* 19 per annum.

*Estimated Total Annual Burden of Respondents:* 50,369 hours.

Copies of this information collection can be obtained from Kimberly Chisley, the Agency Information Collection Coordinator, at (202) 720–2568 or e-mail at *Kimberly.Chisley@usda.gov.*

*Requests for comments:* Send comments regarding (a) whether the proposed collection of information is necessary for the proper performance of the functions of the agency, including whether the information will have practical utility; (b) the accuracy of the agency's estimate of the burden of the proposed collection of information; (c) ways to enhance the quality, utility and clarity of the information to be collected; and (d) ways to minimize the burden of the collection of information on those who are to respond, including through the use of automated, electronic, mechanical, or other technological collection techniques or other forms of information technology.

Comments may be sent to William S. Hawkins, Director, Program Administration Division, FAS, USDA, Stop 1031, Washington, DC 20250, or *william.hawkins@fas.usda.gov,* or to the Desk Officer for Agriculture, Office of Information and Regulatory Affairs, Office of Management and Budget (OMB), Washington, DC 20503. Persons with disabilities who require an alternative means for communication of information (Braille, large print, audiotape, etc.) should contact USDA's Target Center at (202) 720–2600 (voice and TDD).

All responses to this notice will be summarized and included in the request for OMB approval. All comments will also become a matter of public record.

Signed at Washington, DC, on November 24, 2003.

**Kenneth J. Roberts,**

*Administrator, Foreign Agricultural Service.*

[FR Doc. 03–29803 Filed 11–28–03; 8:45 am]

BILLING CODE 3410–10–M

## DEPARTMENT OF AGRICULTURE

### Cooperative State Research, Education, and Extension Service

### Decision Support, Education, and Workforce Development Through Geospatial Extension Specialists Program: Request for Applications and Request for Input

**AGENCY:** Cooperative State Research, Education, and Extension Service, USDA.

**ACTION:** Notice of request for applications and request for input.

**SUMMARY:** As part of a collaborative, interagency effort, the Cooperative State Research, Education, and Extension Service (CSREES) of the U.S. Department of Agriculture (USDA) is soliciting applications for the Decision Support, Education, and Workforce

Development through Geospatial Extension Specialists (GES) Program for fiscal year (FY) 2004 to support programmatic activities (1) in states that establish new Geospatial Extension Specialist positions, and (2) in on-going Geospatial Extension Specialist programs. Beginning with the use of FY 2003 funds in this RFA, the participating agencies anticipate allocating a total of approximately $1 million over three years to fund the GES Program.

The GES Program is supported by CSREES, the Earth Science Enterprise (ESE) of the National Aeronautics and Space Administration (NASA), and the National Sea Grant College Program of the National Oceanic and Atmospheric Administration (NOAA), Department of Commerce (DOC) as described in this Request for Applications (RFA). CSREES will administer GES Program grants and cooperative agreements.

**DATES:** Applications must be received by close of business (COB) on March 1, 2004, (5 p.m. eastern standard time). Applications received after this deadline will not be considered for funding. Comments regarding this RFA are requested within three months from the issuance of this notice. Comments received after that date will be considered to the extent practicable.

**ADDRESSES:** The address for hand-delivered applications or applications submitted using an express mail or overnight courier service is: Geospatial Extension Specialists Program; c/o Proposal Services Unit; Cooperative State Research, Education, and Extension Service; U.S. Department of Agriculture; Room 1420, Waterfront Centre; 800 9th Street, SW.; Washington, DC 20024; Telephone: (202) 401–5048.

Applications sent via the U.S. Postal Service must be sent to the following address: Geospatial Extension Specialists Program; c/o Proposal Services Unit; Cooperative State Research, Education, and Extension Service; U.S. Department of Agriculture; STOP 2245; 1400 Independence Avenue, SW.; Washington, DC 20250–2245.

Written stakeholder comments should be submitted by mail to: Policy and Program Liaison Staff; Office of Extramural Programs; USDA–CSREES; STOP 2299; 1400 Independence Avenue, SW.; Washington, DC 20250–2299; or via e-mail to: *RFP–OEP@csrees.usda.gov.* (This e-mail address is intended only for receiving comments regarding this RFA and not requesting information or forms.) In your comments, please state that you are responding to the Geospatial Extension Specialists Program RFA.

**FOR FURTHER INFORMATION CONTACT:** Greg Crosby; National Program Leader; Cooperative State Research, Education, and Extension Service; U.S. Department of Agriculture; STOP 2210; 1400 Independence Avenue, SW.; Washington, DC 20250–2210; Telephone: (202) 401–6050; Fax: (202) 401–1706; E-mail: *gcrosby@csrees.usda.gov;* or Mr. Edwin Sheffner; Earth Science Enterprise, Code YO; National Aeronautics and Space Administration; 300 E Street, SW.; Washington, DC 20546; telephone: (202) 358–0239; fax: (202) 358–2770; e-mail: *edwin.j.sheffner@nasa.gov;* or Mr. Rodney McKellip; Earth Science Applications Directorate; John C. Stennis Space Center; Code MA00 Bldg. 1100; SCC, MS 29529–6000; telephone: (228) 688–2984; fax: (228) 688–7455; e-mail: *rmckelli@ssc.nasa.gov.*

**SUPPLEMENTARY INFORMATION:**

**Table of Contents**

Stakeholder Input
Catalog of Federal Domestic Assistance
Part I. General
A. Legislative Authority and Background
B. Purpose, Priorities and Fund Availability
C. Eligibility
D. Indirect Costs
E. Matching Requirements
F. Funding Restrictions
G. Types of Applications
Part II. Program Description
A. Project Types
B. Program Description
Part III. Preparation of an Application
A. Program Application Materials
B. Content of Applications
C. Submission of Applications
D. Acknowledgment of Applications
Part IV. Review Process
A. General
B. Evaluation Criteria
C. Conflicts of Interest and Confidentiality
Part V. Award Administration
A. General
B. Organizational Management Information
C. Award Document and Notice of Award
Part VI. Additional Information
A. Access to Review Information
B. Use of Funds; Changes
C. Expected Program Outputs and Reporting Requirements
D. Applicable Federal Statutes and Regulations
E. Safety
F. Confidential Aspects of Applications and Awards
G. Regulatory Information
H. Grants.gov Implementation Plans
I. DUNS Number
J. Required Registration for Grants.gov

## Stakeholder Input

CSREES is requesting comments regarding this RFA from any interested party. These comments will be considered in the development of any subsequent RFA for the program. Such comments will be used to meet the requirements of section 103(c)(2) of the Agricultural Research, Extension, and Education Reform Act of 1998 (7 U.S.C. 7613(c)(2)). This section requires the Secretary to solicit and consider input on a current RFA from persons who conduct or use agricultural research, extension and education for use in formulating future RFAs for competitive programs. Comments should be submitted as provided in the **ADDRESSES** and **DATES** portions of this announcement.

## Catalog of Federal Domestic Assistance

This program is listed in the Catalog of Federal Domestic Assistance under 10.206 for USDA and 43.002 for NASA.

## Part I. General

### *A. Legislative Authority and Background*

Section 737 of the General Provisions of the Consolidated Appropriations Resolution, 2003 (Division A of Pub. L. 108–7) provides CSREES with the authority to use up to twenty percent of the amount made available in the Act for the National Research Initiative Competitive Grants Program (NRI), to carry out a competitive grants program under the same terms and conditions as those provided in section 401 of the Agricultural Research, Extension, and Education Reform Act of 1998 (AREERA) (7 U.S.C. 7621).

Section 401 of AREERA established in the Treasury of the United States an account and authorized the Secretary of Agriculture to establish a research, extension, and education competitive grants program to address critical emerging U.S. agricultural and rural issues related to future food production; environmental quality and natural resource management; farm income; or rural, economic and business and community development policy.

The authority for NASA participation in the GES Program is found in the National Aeronautics and Space Administration Act of 1958, as amended, 42 U.S.C. 2473 (c)(5), and section 316 of the National Aeronautics and Space Administration Authorization Act of 2000, Pub. L. 106–391 (7 U.S.C. 5935 *note*).

### *B. Purpose, Priorities and Fund Availability*

The GES Program supports programmatic activities (1) in states that establish new Geospatial Extension Specialist positions, and (2) in on-going Geospatial Extension Specialist

programs. Using funds made available in FY 2003, this RFA solicits GES Program applications for projects that: Improve, through the use of geospatial information, the decision support systems of users at local, county and state levels; improve education in remote sensing and related geospatial technology at the local, county and state levels; and, promote development of a workforce skilled in the use of geospatial technology and integrated with the staffs of user organizations. Examples of activities the GES Program may support are included in Part II, B.

Priority will be given to projects with a documented commitment to initiate or continue a Geospatial Extension Specialist position, that take full advantage of Space Grant, Sea Grant, and Cooperative Extension activities in the state, and that demonstrate links to the user communities within the state (as described in Part II, B.).

There is no commitment by CSREES to fund a particular application or to make a specific number of awards. Beginning with the use of FY 2003 funds in this RFA, the participating agencies anticipate allocating a total of approximately $1 million over three years to fund the GES Program. CSREES's obligation to make award(s) is contingent upon the availability of appropriated funds from which payment can be made and the receipt of proposals that are deemed acceptable for award under this solicitation.

*C. Eligibility*

The following entities are eligible to apply for and receive a competitive grant: (1) A Federal research agency; (2) a national laboratory; (3) a college or university or a research foundation maintained by a college or university; (4) a private research organization with an established and demonstrated capacity to perform research or technology transfer; or (5) a State agricultural experiment station. Unsolicited applications will not be considered and applications from scientists at non-United States organizations will not be accepted.

Applications are expected to involve the participation of the applicant state's land-grant institution and Space Grant Consortium (SGC). Participation of the applicant state's Sea Grant institution is encouraged, where appropriate. Award recipients may subcontract to organizations not eligible to apply provided such organizations are necessary for the conduct of the project.

USDA and NASA encourage researchers in other U.S. government agencies with remote sensing applications responsibilities to participate as members in no-cost or low-cost applications, but civil servants may not request salary reimbursement. Civil servants in other U.S. government research laboratories are eligible to participate, but also may not request salary reimbursement.

*D. Indirect Costs*

Section 1462 of the National Agricultural Research, Extension, and Teaching Policy Act of 1977 (7 U.S.C. 3310) requires that CSREES limit the recovery of indirect costs on all competitive awards to 19 percent of total Federal funds provided under the award. Therefore, the recovery of indirect costs on awards made by CSREES under the GES Program may not exceed the lesser of the institution's official negotiated indirect cost rate or the equivalent of 19 percent of total Federal funds awarded. Another method of calculating the maximum allowable is 23.456 percent of the total direct costs. (This limitation also applies to the recovery of indirect costs by any subawardee or subcontractor, and should be reflected in the subrecipient budget.) If no rate has been negotiated, a reasonable dollar amount (equivalent to or less than 19 percent of total Federal funds requested) in lieu of indirect costs may be requested, subject to approval by CSREES. This same indirect cost limitation applies to subcontracts.

*E. Matching Requirements*

The identification of institutional financial support for the GES position and/or project will be considered an indicator of commitment in the evaluation of applications (see Part IV, B. and Part III, B. 5(e)).

If a grant provides a particular benefit to a specific agricultural commodity, the grant recipient is required to match the USDA funds awarded on a dollar-for-dollar basis from non-Federal sources with cash and/or in-kind contributions.

CSREES may waive the matching funds requirement for a grant if CSREES determines that: (a) the results of the project, while of particular benefit to a specific agricultural commodity, are likely to be applicable to agricultural commodities generally; or (b) the project involves a minor commodity, the project deals with scientifically important research, and the grant recipient is unable to satisfy the matching funds requirement.

*F. Funding Restrictions*

Funds may not be used for the renovation or refurbishment of research spaces; purchase or installation of fixed equipment in such spaces; or planning, repair, rehabilitation, acquisition, or construction of buildings or facilities.

*G. Types of Applications*

1. New Position

This is an application from a state where a new Geospatial Extension Specialist position has been created (a state other than the eleven listed in Part II, B.). New Position applications may request a maximum of $100,000 per year for up to three (3) years.

2. Pre-existing Position

This is an application from a state that already has a Geospatial Extension Specialist. Pre-existing Position applications may request a maximum of $50,000 for one year, with the possibility of continuation for two (2) additional years at the same level (see Part II, A. for further information).

**Part II. Program Description**

*A. Project Types*

New Position applications may request a maximum of $100,000 per year for up to three (3) years. Pre-existing Position applications may request a maximum of $50,000 for one year, with the possibility of continuation for two (2) additional years at the same level. A continuation grant is a grant instrument by which CSREES agrees to support a specified level of effort for a predetermined project period with a statement of intention to provide additional support at a future date, provided that performance has been satisfactory, appropriations are available for this purpose, and continued support would be in the best interest of the Federal government and the public.

CSREES anticipates funding three (3) New Position applications and two (2) Pre-existing Position applications. Awards will be made as grants or cooperative agreements as determined at the time of each award. Award amounts will depend on reviewers' recommendations, participating agencies' priorities, and the availability of funds.

Funding sponsored projects beyond the grant period will be the responsibility of the state or another source. Funding from NASA's Earth Science Applications Division for the GES Program will be limited to three years in each state. This limitation does not preclude a state's Geospatial Extension Specialist from applying for additional support for specific applications development projects through USDA or NASA research announcements, unsolicited applications or other mechanisms,

concurrent with, or following, the term of this support.

*B. Program Description*

The past decade has witnessed an explosion in the availability and use of information technology. This is especially true in the three allied ''geospatial'' technologies—remote sensing, GIS, and GPS. Technological advances often have occurred so quickly that many of the most obvious potential users, such as those involved in the use and management of agriculture and natural resources, and urban and regional planning, have been left behind. New sources of data from NASA (*e.g.*, Landsat 7, Terra, and Aqua) and high-resolution data from commercial sources are now available. These new sources of data, accompanied by new methods for data processing and analysis, provide the basis for new applications and increase the challenge of assuring that the broad, potential user community receives the benefits of available technology.

USDA/CSREES, NASA/ESE, the NASA Space Grant program, and NOAA Sea Grant share a commitment to bring science to society by returning the maximum benefit to the American taxpayer from new science and technology. Geospatial Extension Specialist positions help fulfill this commitment by building on existing resources to put geospatial technology to practical use around the country. The GES Program's goal will be met in each state through development and implementation of projects by the Geospatial Extension Specialists that improve the decision support tools of users at local to statewide levels, improve education in remote sensing and geospatial technology, and develop a workforce skilled in geospatial technology and integrated with the staffs of user organizations.

Geospatial Extension Specialists facilitate the use of NASA Earth science capabilities, which include Earth observations from space, modeling and systems engineering, and other geospatial technology (*e.g.*, geographic information systems (GIS) and global positioning systems (GPS)). They provide geospatial information and decision support tools that address the operational needs of users at local, regional and statewide levels. Users include individuals, agencies, groups, and associations in the public, private and educational. Geospatial Extension Specialists also serve as statewide resources for education in remote sensing, GIS, GPS and related technologies.

GES programs have been established in eleven states over the last three years. These programs, in Alabama, Arizona, Connecticut, Mississippi, Nebraska, New Hampshire, North Dakota, Ohio, Oklahoma, Utah and Virginia, are partnerships between land-grant institutions and the NASA SGC within the states. Geospatial Extension Specialist positions are located within the regular Cooperative Extension Service (CES) structure in each participating state, and provide technical support to CES agents and clients (as do other extension specialists). They are eligible for tenure or other comparable professional appointment, and are expected to draw on existing expertise available through the land-grant system, SGC, and the network of NASA Principal Investigators.

States creating new Geospatial Extension Services positions should establish a geospatial technology delivery system at the county level. They can achieve this by building linkages among existing programs, including:

1. NASA Earth Science Enterprise comprised of Earth science results, data, technology and a well-established nationwide research infrastructure. (*http://www.earth.nasa.gov*).

2. NASA Space Grant comprised of an Earth and space science research, education, and outreach network that exists in each state. (*http://www.education.nasa.gov/spacegrant*).

3. USDA and Land-Grant Cooperative Extension—a technology transfer network connected with a diverse user base and found in virtually every county of the Nation. (*http://www.reeusda.gov/1700/statepartners/usa.htm*).

4. National Sea Grant College Program—a technology transfer network for stewardship of marine resources. (*http://www.nsgo.seagrant.org/*).

The following examples of activities the GES Program may support have been included to suggest approaches to meeting the Program's goals:

1. Decision Support—A primary objective of the GES Program is to initiate projects that will lead to operational use of remote sensing and geospatial technology in the decision support processes of an operational entity. To ensure that the operational focus is maintained, end users must be identified when projects are initiated. End users should be actively involved in defining project goals and routinely involved in developing applications. Participation of the commercial sector in data acquisition, value-added product generation and operations management is encouraged.

2. Education—A second objective of the program is to increase geospatial literacy. The following constituencies need to be addressed:

(a) General public—There is a strong need for a continued awareness campaign for the general public that emphasizes in a non-technical fashion the practical applications of geospatial information technologies and their potential to solve pressing challenges in the state. Examples of such applications are: Natural resource management; disaster management; and business, including real estate, transportation, and insurance.

(b) County extension agents—Within the CES, at the state level, the level of knowledge about geospatial information technologies is uneven and needs to be improved. Educating county extension agents is an important goal since the agents are the resource to which users turn for information. Many other specialists within CES will benefit from the GES Program in their activities.

(c) User groups—The GES Program will conduct education and training of potential user groups in the state, such as farmers, foresters, businesses, disaster management teams, *etc.*

(d) Youth education—The GES Program will play an important role in youth education through 4–H organizations and through education and outreach programs sponsored by the SGC in the state. The full use of the complementary CES and SGC networks will be key to success.

(e) State and local government personnel—State and local government personnel will benefit from educational and training programs initiated by the GES Program.

3. Workforce Development—The third objective of the GES Program is to develop a workforce skilled in remote sensing and geospatial technology for on-going activities in the states. The Geospatial Extension Specialist will assist the SGC in the state and others in developing a skilled workforce in geospatial information technologies. For example, Space Grant Fellows working with the GES Program will develop skills in applied geospatial research. Real world challenges addressed by the specialist in the state can be integrated into geospatial teaching curricula, thereby enhancing the learning process at the undergraduate level. The specific activities that might be pursued by Geospatial Extension Specialists vary to fit the needs of users in the states.

Additional information about sponsored projects is available online at *http://earthgrant.auburn.edu* and *http://aria.arizona.edu/extension/program.html.*

The intent of the program is to maximize impact and ''return on investment.'' Projects included in applications should focus on significant topics within the state or region. Because Geospatial Extension Specialists are intended to provide meaningful assistance to users within the state, the applications they choose to address should be of high priority for a reasonably large group to insure relevance, visibility and impact. Projects are also encouraged that build on existing resources. NASA (ESE and Space Grant) has built a considerable Earth science infrastructure within the nation. Similarly, through the land-grant system, the states have built an unparalleled research and technology infrastructure that often includes some NASA resources (*i.e.*, NASA PIs and their centers). These existing resources should form the base for proposed activities. The relative strengths of these resources will vary from state to state, but the intent is to build from existing centers and strengths, rather than create new ones.

Activities will be managed cooperatively at the national and state levels. Nationally, the program will be the shared responsibility of NASA, through the Office of Education and the Office of Earth Science (OES); USDA, through CSREES; and NOAA, through the National Sea Grant College Program. A Program Coordinating Group (PCG) comprised of the Space Grant Director at NASA, the manager of the applications research program in the Earth Science Applications Division of NASA/OES, the designated appointee of CSREES for USDA, and the designated appointee of the National Sea Grant College Program for NOAA, will be responsible for operational decisions in the program, subject to review by senior management.

Management of the program at the state level will be led by Geospatial Extension Specialists with concurrence from Directors of the state CES and the SGC, as appropriate. The CES Director will be the primary resource for questions regarding applications and demonstration projects. The state Space Grant Director will be the primary resource for issues related to geospatial research, education and workforce development.

## Part III. Preparation of an Application

### *A. Program Application Materials*

The participating agencies have agreed to use the USDA guidelines for application format (see below) and application kit. Program application materials are available at the CSREES Web site (*http://www.reeusda.gov/1700/funding/ourfund.htm*). If you do not have access to the CSREES web page or have trouble downloading material, you may contact the Proposal Services Unit, Competitive Programs, USDA/CSREES at (202) 401–5048. When calling the Proposal Services Unit, please indicate that you are requesting forms for the Geospatial Extension Specialists Program. These materials may also be requested via Internet by sending a message with your name, mailing address (not e-mail) and phone number to *psb@csrees.usda.gov.* State that you want a copy of the Program Description and application materials for the FY 2004 Geospatial Extension Specialists Program.

### *B. Content of Applications*

Applications should be prepared following the guidelines and the instructions below. Each application must contain the following elements in the order indicated:

1. General

The application should follow these guidelines, enabling reviewers to more easily evaluate the merits of each application in a systematic, consistent fashion:

(a) The application should be prepared on only one side of the page using standard size (8½″ x 11″) white paper, one inch margins, typed or word processed using no type smaller than 12 point font, and single- or double-spaced. Use an easily readable font face (*e.g.*, Geneva, Helvetica, Times Roman).

(b) Number each page of the application sequentially, starting with the Project Description, including the budget pages, required forms, and any appendices.

(c) Staple the application in the upper left-hand corner. Do not bind. An original and fourteen (14) copies of the application, along with ten (10) additional copies of the Project Summary, must be submitted in one package.

(d) Include original illustrations (photographs, color prints, *etc.*) in all copies of the application to prevent loss of meaning through poor quality reproduction.

(e) The contents of the application should be assembled in the following order:

(1) Application Cover Page (Form CSREES–2002)
(2) Table of Contents
(3) Project Summary (Form CSREES–2003)
(4) Response to Previous Review (if applicable)
(5) Project Description (see instructions for page limitations)
(6) References to Project Description
(7) Appendices to Project Description
(8) Facilities and Equipment
(9) Key Personnel (vitae and publications list)
(10) Collaborative Arrangements (including letters of support)
(11) Conflict-of-Interest List (Form CSREES–2007)
(12) Budget (Form CSREES–2004)
(13) Budget Narrative
(14) Matching (if required)
(15) Current and Pending Support (Form CSREES–2005)
(16) Assurance Statement(s) (Form CSREES–2008)
(17) Compliance with the National Environmental Policy Act (NEPA) (Form CSREES–2006)

2. Proposal Cover Page (Form CSREES–2002)

*Page A.* Each copy of each grant application must contain a Proposal Cover Page, Form CSREES–2002. One copy of the application, preferably the original, must contain the pen-and-ink signature(s) of the proposing PDs and the AOR, the individual who possesses the necessary authority to commit the organization's time and other relevant resources to the project. If there are more than three co-PDs for an application, please list additional co-PDs on a separate sheet of paper (with appropriate information and signatures) and attach to the Proposal Cover Page (Form CSREES–2002). Any proposed PD or co-PD whose signature does not appear on Form CSREES–2002 or attached additional sheets will not be listed on any resulting grant award. Complete both signature blocks located at the bottom of the Proposal Cover Page form. Please note that Form CSREES–2002 is comprised of two parts—Page A, which is the ''Proposal Cover Page'', and Page B, which is the ''Personal Data on Project Director.''

Form CSREES–2002 serves as a source document for the CSREES grant database; it is therefore important that it be accurately completed in its entirety, especially the e-mail addresses requested in Blocks 4.c. and 18.c. However, the following items are highlighted as having a high potential for errors or misinterpretations:

(a) Type of Performing Organization (Block 6.a. and 6.b.). For Block 6.a., a check should be placed in the appropriate box to identify the type of organization which is the legal recipient named in Block 1. Only one box should be checked. For Block 6.b., please check as many boxes that apply to the affiliation of the PD listed in Block 16.

(b) Title of Proposed Project (Block 7). The title of the project must be brief

(140-character maximum, including spaces), yet represent the major thrust of the effort being proposed. Project titles are read by a variety of nonscientific people; therefore, highly technical words or phraseology should be avoided where possible. In addition, introductory phrases such as ''investigation of,'' ''research on,'' ''education for,'' or ''outreach that'' should not be used.

(c) Program to Which You Are Applying (Block 8). Enter ''Geospatial Extension Specialists Program'' in this block.

(d) DUNS NO. (Data Universal Numbering System) (Block 11.). A DUNS number must be included for the legal recipient named in Block 1. (except applications from individuals). See Part VI, I.

(e) Type of Request (Block 14). Check the appropriate block box for your application. For ''Renewals'' and ''Resubmitted Renewals,'' the prior USDA Award No. must be identified.

(f) Project Director (PD) (Blocks 16–19). Blocks 16–18 are used to identify the PD and Block 19 to identify co-PDs. If needed, additional co-PDs may be listed on a separate sheet of paper and attached to Form CSREES–2002, the Proposal Cover Page, with the applicable co-PD information and signatures. Listing multiple co-PDs, beyond those required for genuine collaboration, is discouraged.

(g) Other Possible Sponsors (Block 21). List the names or acronyms of all other public or private sponsors including other agencies within USDA to which your application has been or might be sent. In the event you decide to send your application to another organization or agency at a later date, you must inform the identified CSREES program contact as soon as practicable. Submitting your application to other potential sponsors will not prejudice its review by CSREES; however, submitting the same (*i.e.*, duplicate) application to another CSREES program is not permissible.

*Page B*. Page B should be submitted only with the original signature copy of the application and should be placed as the last page of the original copy of the application. This page contains personal data on the PD(s). CSREES requests this information in order to monitor the operation of its review and awards processes. This page will not be duplicated or used during the review process. Please note that failure to submit this information will in no way affect consideration of your application.

3. Table of Contents

For ease in locating information, each application must contain a detailed Table of Contents just after the Proposal Cover Page. The Table of Contents should include page numbers for each component of the application. Pagination should begin with the first page of the Project Description.

4. Project Summary (Form CSREES 2003)

The application must contain a Project Summary, Form CSREES–2003. The summary should be approximately 250 words, contained within the box, placed immediately after the Table of Contents, and not numbered. The names and affiliated organizations of all PDs and co-PDs should be listed on this form, in addition to the title of the project. The summary should be a self-contained, specific description of the activity to be undertaken and should focus on: Overall project goal(s) and supporting objectives; plans to accomplish project goal(s); and relevance of the project to the goals of the GES Program. The Project Summary must indicate whether the applicant is requesting funds for a New Position or a Pre-existing Position. The importance of a concise, informative Project Summary cannot be overemphasized. If there are more than three co-PDs for an application, please list additional co-PDs on a separate sheet of paper (with appropriate information) and attach to the Project Summary. (Please check the ''Standard Research Proposal'' box on the upper right-hand portion of the form under ''Proposal Type'.)

5. Project Description

The Project Description must not exceed 18 pages, including tables, diagrams and other visual material. This page limitation applies regardless of whether figures or tables are included. All pages, including those with figures or tables, should be numbered sequentially. Applications exceeding this page limitation may be returned without review. This maximum has been established to ensure fair and equitable competition. The Project Description must include all of the following:

(a) Introduction—A clear statement of the long-term goal(s) and supporting objectives of the proposed activities should be included. Summarize the intention of each project proposed by the Geospatial Extension Specialist, and identify the relevant area of the project (decision support, education or workforce development); and

(b) Relevance and Significance—Identify the objectives of each project including the current state of the intended target process in decision support, education or workforce development, and the improvement that will ensue from the proposed project.

In addition, New Position applications must include the following information about the Geospatial Extension Specialist position:

(1) Organization

*Institution*—A general description of the institution housing the Geospatial Extension Specialist including name, location and other general information that might be relevant (*e.g.*, number of students; academic strengths; traditional role within the state);

*Home unit*—A description of the unit in which the position would reside with a rationale explaining that choice; and

*Existing institutional resources*—Facilities and other resources on which the position could draw either at the home institution or resources offered by other partners (*e.g.*, Space Grant, remote sensing or GIS centers; NASA PIs; service providers in the private sector).

(2) Position Function

*Scope*—The role the position serves in a broader institutional vision within the Land Grant function (*e.g.*, support of a precision agriculture initiative) as well as the Space Grant function (*e.g.*, support of a Space Grant intern program);

*Objectives*—The overall objectives of the Geospatial Extension Specialist; and

*Activities*—The types of activities that the Geospatial Extension Specialist is expected to perform.

(c) *Approach*—The activities proposed or problems being addressed must be clearly stated and the approaches being applied clearly described. The following should be included: (1) A description of the activities proposed; (2) methods to be used in carrying out the project, including the feasibility of the methods; (3) expected outcomes; (4) means by which results will be analyzed, assessed, or interpreted; and (5) how results or products will be used.

(d) Time Table—Provide an expected timeline for completing the project in the requested duration.

(e) Management Plan—

(1) Management structure—Describe both line authority, and more importantly, cooperating mechanisms through which existing resources or partners might be tapped by the Geospatial Extension Specialist using the Land Grant and Space Grant structures.

(2) Outreach plan—Identify vehicles by which potential users, students,

educators, and the public-at-large will be involved in the proposed GES activities. In addition to conventional print media, each project will seek to reach a broader audience through other forms of media. Projects are expected to develop World Wide Web sites that describe the projects, and provide linkages to appropriate NASA/ESE, Space Grant and USDA home pages. Projects are encouraged to find outlets in other media (*e.g.*, popular press, broadcast) to reach an even broader audience. Describe how these outreach efforts will be coordinated through the NASA/ESE, Space Grant and USDA/CSREES outreach teams. NASA Web site requirements are available at *http://section508.nasa.gov.*

(3) Demonstrated commitments—Provide evidence of commitment to the proposed project on the part of the proposing institution. For collaborating organizations, such evidence should be the same as described in 9., Collaborative and Subcontractual Arrangements (*e.g.*, letter of support).

(4) Anticipated performance metrics—Include anticipated outcomes and impacts of the project on the user community that can be used to evaluate the performance of the GES position and the effectiveness of the project.

(f) Evaluation and Monitoring of Project—Provide a plan for assessing and evaluating the accomplishments of the stated application objectives during the project and describe ways to determine the effectiveness of the end results during and upon termination of the project. Include plans for evaluating and monitoring the administration of the project, as well. This description should include how funds and resources will be allocated so that collaborative participation of all parties is ensured throughout the duration of the project.

6. References in Project Description

All references to works cited should be complete, including titles and all co-authors, and should conform to an accepted journal format. References are not considered in the page limitation for the Project Description.

7. Appendices to Project Description

Each Project Description is expected to be complete, however, additions to the Project Description (appendices) are allowed if they are directly germane to the proposed project and strictly limited to a maximum of two (2) of the following:

(a) Reprints (papers that have been published in peer-reviewed journals); and

(b) Preprints (manuscripts in press for a peer-reviewed journal, must be accompanied by letters of acceptance from the publishing journals).

Manuscripts sent in support of the application should be single-spaced and printed on both sides of the page. Each manuscript must be identified with the name of the submitting organization, the name(s) of the PD(s), and the title of the application, and be securely attached to each copy of the application.

Program staff will not collate applications or application addenda. Information may not be appended to an application to circumvent the page limitations prescribed for the Project Description. Extraneous materials will not be used during the peer review process.

8. Facilities and Equipment

Facilities and major items of equipment that are available for use or assignment to the proposed project during the requested period of support should be described. In addition, items of nonexpendable equipment necessary to conduct and successfully complete the proposed project should be listed (including dollar amounts), and, if funds are requested for their acquisition, justified on a separate page and attached to the budget.

9. Collaborative and Sub-Contractual Arrangements

If it will be necessary to enter into formal consulting or collaborative arrangements with others, such arrangements should be fully explained and justified (*e.g.*, letters of support). In addition, evidence should be provided that the collaborators involved have agreed to render these services. If the consultant(s) or collaborator(s) are known at the time of application, vitae or resume should be provided. The applicant also will be required to provide additional information on consultant(s) and collaborator(s) in the Budget portion of the application. See instructions in the application forms for completing Form CSREES–2004, Budget. For purposes of application development, informal day-to-day contacts between key project personnel and outside experts are not considered to be collaborative arrangements and thus do not need to be detailed.

10. Key Personnel

The following should be included, as applicable:

(a) The roles and responsibilities of each PD and/or collaborator should be clearly described, including an estimate of the time each is committing to the proposed project; and

(b) Vitae for the Geospatial Extension Specialist, senior associates and other professional personnel. This section should include vitae of all key persons who are expected to work on the project, whether or not funding is sought for their support. The vitae should be limited to two (2) pages in length, excluding publications listings. A chronological list of all publications in refereed journals during the past four (4) years, including those in press, must be provided for each project member for whom a vita is provided. Also list only those non-refereed technical publications which have relevance to the proposed project. All authors should be listed in the same order as they appear on each paper cited, along with the title and complete reference as these usually appear in journals.

11. Conflict-of-Interest List (Form CSREES–2007)

A Conflict-of-Interest List, Form CSREES–2007, must be provided for all individuals who have submitted a vita in response to item 10(b) of this part. Each Form CSREES–2007 must list alphabetically, by last names, the full names of the individuals in the following categories: (a) All co-authors on publications within the past four years, including pending publications and submissions; (b) all collaborators on projects within the past four years, including current and planned collaborations; (c) all thesis or postdoctoral advisees/advisors; and (d) all persons in your field with whom you have had a consulting or financial arrangement within the past four years, who stand to gain by seeing the project funded. This form is necessary to assist program staff in excluding from application review those individuals who have conflicts of interest with the personnel in the grant application. The program contact should be informed of any additional conflicts of interest that arise after the application is submitted.

12. Budget

Prepare the budget, Form CSREES–2004, in accordance with instructions provided with the application forms. Budgets should be commensurate with activities proposed. A budget form is required for each year of requested support. In addition, a cumulative budget is required detailing the requested total support for the overall project period. Applicants may include in their requested budgets reasonable travel expenses for Geospatial Extension Specialists whose work is supported through this solicitation to attend two meetings per year, at locations to be determined. The budget form may be

reproduced as needed by applicants. Funds may be requested under any of the categories listed on the form, provided that the item or service for which support is requested is allowable under the authorizing legislation, the applicable statutes, regulations, and Federal cost principles, and these program guidelines, and can be justified as necessary for the successful conduct of the proposed project. Applicants must also include a Budget Narrative to justify their budget requests (see 13., below).

13. Budget Narrative

A budget narrative should be included which discusses how the budget specifically supports the proposed project activities. All budget categories, with the exception of indirect costs, for which support is requested must be individually listed (with costs) in the same order as the budget and justified on a separate sheet of paper and placed immediately behind the budget. The budget narrative should explain how each budget item (such as salaries and wages for professional and technical staff, student workers, travel, equipment, *etc.*) is essential to achieving project objectives. Funds may be requested under any of the categories listed on the budget form, provided that the item or service for which support is sought is allowable under the enabling legislation and the applicable Federal cost principles.

14. Matching

If an applicant concludes that matching funds are not required (as specified under Part I, E.), a justification should be included in the Budget Narrative. CSREES will consider this justification when ascertaining final matching requirements or determining if required matching can be waived. CSREES retains the right to make final determinations regarding matching requirements.

For those grants where matching funds are required, as specified under Part I. E., applications should include written verification of commitments of matching support (including both cash and in-kind contributions) from third parties. Written verification means:

For any third party cash contributions, a separate pledge agreement for each donation, signed by the authorized organizational representative of the donor organization and the applicant organization, which must include: (1) The name, address, and telephone number of the donor; (2) the name of the applicant organization; (3) the title of the project for which the donation is made; (4) the dollar amount of the cash donation; and (5) a statement that the donor will pay the cash contribution during the grant period.

For any third party in-kind contributions, a separate pledge agreement for each contribution, signed by the authorized organizational representatives of the donor organization and the applicant organization, which must include: (1) The name, address, and telephone number of the donor; (2) the name of the applicant organization; (3) the title of the project for which the donation is made; (4) a good faith estimate of the current fair market value of the third party in-kind contribution; and (5) a statement that the donor will make the contribution during the grant period.

The sources and the amount of all matching support from outside the applicant organization should be summarized on a separate page and placed in the application immediately following the Budget Narrative. All pledge agreements must be placed in the application immediately following the summary of matching support.

The value of applicant contributions to the project shall be established in accordance with the applicable cost principles. Applicants should refer to OMB Circulars A–21, Cost Principles for Educational Institutions, A–87, Cost Principles for State, Local, and Tribal Governments, A–122, Cost Principles for Non-Profit Organizations and For-Profit Organizations, and the cost principles in the Federal Acquisition Regulation at 48 CFR 31.2 (see 7 CFR 3015.194) for further guidance and other requirements relating to matching and allowable costs.

15. Assurance Statement(s), (Form CSREES–2008)

A number of situations encountered in the conduct of projects require special assurances, supporting documentation, *etc.*, before funding can be approved for the project. In addition to any other situation that may exist with regard to a particular project, applications involving any of the following elements must comply with the additional requirements, as applicable.

(a) *Recombinant DNA or RNA Research.* As stated in 7 CFR part 3015.205 (b)(3), all key personnel identified in the application and all endorsing officials of the proposing organization are required to comply with the guidelines established by the National Institutes of Health entitled, ''Guidelines for Research Involving Recombinant DNA Molecules,'' as revised. If your project proposes to use recombinant DNA or RNA techniques, you must so indicate by checking the ''yes'' box in Block 20 of Form CSREES–2002 (the Cover Page) and by completing Section A of Form CSREES–2008. For applicable applications recommended for funding, Institutional Biosafety Committee approval is required before funds will be released. Please refer to the application forms for further instructions.

(b) *Animal Care.* Responsibility for the humane care and treatment of live vertebrate animals used in any grant project supported with funds provided by CSREES rests with the performing organization. Where a project involves the use of living vertebrate animals for experimental purposes, all key project personnel identified in a application and all endorsing officials of the proposing organization are required to comply with the applicable provisions of the Animal Welfare Act of 1966, as amended (7 U.S.C. 2131 *et seq.*) and the regulations promulgated thereunder by the Secretary in 9 CFR parts 1, 2, 3, and 4 pertaining to the care, handling, and treatment of these animals. If your project will involve these animals, you should check ''yes'' on Block 20 of CSREES–2002 and complete Section B of Form CSREES–2008. In the event a project involving the use of live vertebrate animals is recommended for a grant award, funds will be released only after the Institutional Animal Care and Use Committee has approved the project. Please refer to the application forms for further instructions.

(c) *Protection of Human Subjects.* Responsibility for safeguarding the rights and welfare of human subjects used in any grant project supported with funds provided by CSREES rests with the performing organization. Guidance on this issue is contained in the National Research Act, Public Law 93–348, as amended, and implementing regulations promulgated by the Department under 7 CFR part 1c. If you propose to use human subjects for experimental purposes in your project, you should check the ''yes'' box in Block 20 of Form CSREES–2002 and complete Section C of Form CSREES–2008. In the event a project involving human subjects at risk is recommended for a grant award, funds will be released only after the Institutional Review Board (IRB) has approved the research plan and CSREES has accepted documentation of the approval. Please refer to the application forms for further instructions.

16. Certifications

Note that by signing Form CSREES–2002 the applicant is providing certifications required by 7 CFR part

3017, regarding Debarment and Suspension and Drug Free Workplace, and 7 CFR part 3018, regarding Lobbying. The certification forms are included in the application package for informational purposes only. These forms should not be submitted with the application since by signing form CSREES–2002 your organization is providing the required certifications. If the project will involve a subcontractor or consultant, the subcontractor/consultant should submit a form AD–1048, Certification regarding Debarment, Suspension, Ineligibility and Voluntary Exclusion—Lower Tier Covered Transactions, to the grantee organization for retention in their records. This form should not be submitted to USDA.

17. Compliance With the National Environmental Policy Act (NEPA) (Form CSREES–2006)

As outlined in 7 CFR part 3407 (the CSREES regulations implementing NEPA) and 14 CFR part 1216 (the NASA regulations regarding compliance with NEPA), the environmental data for any proposed project is to be provided to CSREES so that the Federal agency may determine whether any further action is needed. In some cases, however, the preparation of environmental data may not be required. Certain categories of actions are excluded from the requirements of NEPA.

In order for CSREES to determine whether any further action is needed with respect to NEPA, pertinent information regarding the possible environmental impacts of a proposed project is necessary; therefore, Form CSREES–2006, NEPA Exclusions Form, must be included in the application indicating whether the applicant is of the opinion that the project falls within a categorical exclusion and the reasons therefore. If it is the applicant's opinion that the proposed project falls within the categorical exclusions, the specific exclusion(s) must be identified.

Even though a project may fall within the categorical exclusions, CSREES may determine that an Environmental Assessment or Environmental Impact Statement is necessary for an activity, if substantial controversy on environmental grounds exists or if other extraordinary conditions or circumstances are present which may cause such activity to have a significant environmental effect.

*C. Submission of Applications*

1. When To Submit (Deadline Date)

Applications must be received by COB on March 1, 2004 (5 p.m. eastern standard time). Applications received after this deadline will not be considered for funding.

2. What To Submit

An original and fourteen (14) copies of the application must be submitted. In addition, submit ten (10) copies of the application's Project Summary, Form CSREES–2003. All copies of the application must be submitted in one package.

3. Where To Submit

Applicants are strongly encouraged to submit completed applications via overnight mail or delivery service to ensure timely receipt by USDA. The address for hand-delivered applications or applications submitted using an express mail or overnight courier service is: Geospatial Extension Specialists Program, c/o Proposal Services Unit, Cooperative State Research, Education, and Extension Service, U.S. Department of Agriculture, Room 1420, Waterfront Centre, 800 9th Street, SW., Washington, DC 20024, Telephone: (202) 401–5048.

Applications sent via the U.S. Postal Service must be sent to the following address: Geospatial Extension Specialists Program, c/o Proposal Services Unit, Cooperative State Research, Education, and Extension Service, U.S. Department of Agriculture, STOP 2245, 1400 Independence Avenue, SW., Washington, DC 20250–2245.

*D. Acknowledgment of Applications*

The receipt of all applications will be acknowledged by e-mail. Therefore, applicants are strongly encouraged to provide accurate e-mail addresses, where designated, on the Form CSREES–2002. If the applicant's e-mail address is not indicated, CSREES will acknowledge receipt of the application by letter.

Applicants who do not receive an acknowledgment within 60 days of the submission deadline should contact the program contact. Once the application has been assigned a proposal number, that number should be cited on all future correspondence.

**Part IV. Review Process**

*A. General*

Each application will be evaluated in a two-part process. First, each application will be screened to ensure that it meets the administrative requirements as stated in the RFA. Applications that do not fall within the guidelines as stated in the RFA will be eliminated from program competition and returned to applicants. Second, a review panel will technically evaluate applications that meet these requirements. Written comments will be solicited from ad hoc reviewers when required, and individual written comments and in-depth discussions will be provided by a peer review panel prior to recommending applications for funding.

Reviewers will be selected based upon their training and experience in relevant scientific, extension, or education fields taking into account the following factors: (a) The level of relevant formal scientific, technical education, or extension experience of the individual, as well as the extent to which an individual is engaged in relevant research, education or extension activities; (b) the need to include as reviewers experts from various areas of specialization within relevant scientific, education, or extension fields; (c) the need to include as reviewers other experts (*e.g.*, producers, range or resource managers/operators, and consumers) who can assess relevance of the applications to targeted audiences and to program needs; (d) the need to include as peer reviewers experts from a variety of organizational types (*e.g.*, colleges, universities, industry, state and Federal agencies, private profit and non-profit organizations) and geographic locations; (e) the need to maintain a balanced composition of reviewers with regard to minority and female representation and an equitable age distribution; and (f) the need to include reviewers who can judge the effective usefulness to producers and the general public of each application.

*B. Evaluation Criteria*

Priority will be given to projects with a documented commitment to initiate or continue a Geospatial Extension Specialist position, that take full advantage of Space Grant and Cooperative Extension activities in the state, and that demonstrate links to the user communities within the state.

The following numbered evaluation criteria will be weighted equally and used to review all applications submitted in response to this RFA:

1. Technical Approach

(a) Suitability of the proposed project in terms of addressing significant issues and the probability of meeting stated objectives;

(b) Feasibility, soundness, logic and practicality of the proposed technical methods and concepts for achieving successful applications research;

(c) Clear identification of user needs and user benefits from proposed products or services; and

(d) Centrality of Earth science, remote sensing, and other geospatial technologies to achieving program objectives.

2. Cost-Effectiveness

The demonstrated commitment of cooperative extension (or other university-based extension effort) and/or the Space Grant Consortium to long-term support of the Geospatial Extension Specialist position.

3. Management and Experience

(a) Demonstrated competence and relevant experience of project personnel as an indication of their ability to carry the proposed activity to a successful conclusion as a team;

(b) Feasibility of the management approach as it relates to the methods and concepts demonstrated by the application;

(c) Feasibility of the outreach plan and the soundness of the philosophy and methods by which it is effected;

(d) Degree to which all participants in the application and users are integrated into the proposed activities with well-defined and appropriate roles; and

(e) Adequacy of the facilities and equipment to support the proposed activity.

4. Metrics

The adequacy of metrics and other statistics to be collected that will measure the success of the activity.

*C. Conflicts of Interest and Confidentiality*

During the peer evaluation process, extreme care will be taken to prevent any actual or perceived conflicts of interest that may impact review or evaluation. For the purpose of determining conflicts of interest, the academic and administrative autonomy of an academic institution shall be determined by reference to the current version of the Higher Education Directory, published by Higher Education Publications, Inc., 6400 Arlington Boulevard, Suite 648, Falls Church, VA 22042. Phone: (703) 532–2300. Web site: *http://www.hepinc.com.*

Names of submitting institutions and individuals, as well as application content and peer evaluations, will be kept confidential, except to those involved in the review process, to the extent permitted by law. In addition, the identities of peer reviewers will remain confidential throughout the entire review process. Therefore, the names of the reviewers will not be released to applicants. At the end of the fiscal year, names of reviewers will be made available in such a way that the reviewers cannot be identified with the review of any particular application.

**Part V. Award Administration**

*A. General*

The GES Program will be administered by CSREES but managed as an interagency program involving participating agencies throughout the entire process from the development of the program announcement, to the review, recommendation and monitoring of awards. The interagency program managers will coordinate program administration activities such as review of periodic reporting of project evaluations and annual investigator team meetings.

The amount of each award will be determined jointly by USDA and NASA and their representatives after the panel review process has been completed.

Within the limit of funds available for such purpose, CSREES shall make awards to those responsible, eligible applicants whose applications are judged most meritorious under the procedures set forth in this RFA. It should be noted that the project need not be initiated on the award effective date, but as soon thereafter as practicable so that project goals may be attained within the funded project period. All funds granted by CSREES under this RFA shall be expended solely for the purpose for which the funds are granted in accordance with the approved application and budget, the terms and conditions of the award, the applicable Federal cost principles, and the applicable participating agencies' assistance regulations.

*B. Organizational Management Information*

Specific management information relating to an applicant shall be submitted on a one-time basis as part of the responsibility determination prior to the award of a grant under this RFA if such information has not been provided previously under this or another program for which the sponsoring agency is responsible. CSREES will provide copies of forms recommended for use in fulfilling these requirements as part of the pre-award process. Although an applicant may be eligible based on its status as one of these entities, there are factors that may exclude an applicant from receiving Federal financial and non-financial assistance and benefits under this program (*e.g.*, debarment or suspension of an individual involved or a determination that an applicant is not responsible based on submitted organizational management information).

*C. Award Document and Notice of Award*

The award document will provide pertinent instructions and information including, at a minimum, the following:

1. Legal name and address of performing organization or institution to whom the CSREES Administrator has issued an award under the terms of this request for applications;
2. Title of project;
3. Name(s) and institution(s) of PDs chosen to direct and control approved activities;
4. Identifying award number assigned by CSREES;
5. Project period, specifying the amount of time CSREES intends to support the project without requiring recompetition for funds;
6. Total amount of financial assistance approved by the CSREES Administrator during the project period;
7. Appropriate Catalog of Federal Domestic Assistance (CFDA) number;
8. Legal authority(ies) under which the grant is made;
9. Applicable award terms and conditions (see *http://www.reeusda.gov/crgam/oep/awardterms.htm* to view CSREES award terms and conditions);
10. Approved budget plan for categorizing allocable project funds to accomplish the stated purpose of the award; and
11. Other information or provisions deemed necessary by CSREES to carry out its respective awarding activities or to accomplish the purpose of a particular award.

**Part VI. Additional Information**

*A. Access To Review Information*

Copies of reviews, not including the identity of reviewers, and a summary of the panel comments will be sent to the applicant PD after the review process has been completed.

*B. Use of Funds; Changes*

1. Delegation of Fiscal Responsibility

Unless the terms and conditions of the award state otherwise, the awardee may not in whole or in part delegate or transfer to another person, institution, or organization the responsibility for use or expenditure of award funds.

2. Changes in Project Plans

(a) The permissible changes by the awardee, PD(s), or other key project personnel in the approved project shall be limited to changes in methodology, techniques, or other similar aspects of the project to expedite achievement of

the project's approved goals. If the awardee or the PD(s) is uncertain as to whether a change complies with this provision, the question must be referred to the CSREES Authorized Departmental Officer (ADO) for a final determination.

(b) Changes in approved goals or objectives shall be requested by the awardee and approved in writing by the CSREES ADO prior to effecting such changes. In no event shall requests for such changes be approved which are outside the scope of the original approved project.

(c) Changes in approved project leadership or the replacement or reassignment of other key project personnel shall be requested by the awardee and approved in writing by the CSREES ADO prior to effecting such changes.

(d) Transfers of actual performance of the substantive programmatic work in whole or in part and provisions for payment of funds, whether or not Federal funds are involved, shall be requested by the awardee and approved in writing by the CSREES ADO prior to effecting such transfers, unless prescribed otherwise in the terms and conditions of the award.

(e) Changes in Project Period: The project period may be extended by the awarding agency without additional financial support, for such additional period(s) as the CSREES ADO determines to be necessary to complete or fulfill the purposes of an approved project, but in no case shall the total project period exceed five years. Any extension of time shall be conditioned upon prior request by the awardee and approval in writing by the CSREES ADO, unless prescribed otherwise in the terms and conditions of award.

(f) Changes in Approved Budget: Changes in an approved budget must be requested by the awardee and approved in writing by the CSREES ADO prior to instituting such changes if the revision will involve transfers or expenditures of amounts requiring prior approval as set forth in the applicable Federal cost principles, Departmental regulations, or award.

*C. Expected Program Outputs and Reporting Requirements*

The ultimate success of projects funded under this solicitation is the continuation of Geospatial Extension Specialist positions beyond the project period and the positive demonstrable impact these projects have on the user community. Toward that end, grantees are expected to provide semi-annual and annual progress reports describing the activities of the Geospatial Extension Specialist. Geospatial Extension Specialists whose work is supported through this solicitation should plan to attend two meetings per year, at locations to be determined, of all Geospatial Extension Specialists and appropriate CSREES, NASA and NOAA staff. Applicants may include reasonable travel expenses related to this requirement in their requested project budgets (see Part III, B., 12.).

*D. Applicable Federal Statutes and Regulations*

The following Federal statutes and regulations apply to grant applications considered for review and to project grants awarded by USDA under this program:

7 CFR Part 1, Subpart A—USDA implementation of the Freedom of Information Act.

7 CFR Part 3—USDA implementation of OMB Circular No. A–129 regarding debt collection.

7 CFR Part 15, Subpart A—USDA implementation of Title VI of the Civil Rights Act of 1964, as amended.

7 CFR Part 331 and 9 CFR Part 121—USDA implementation of the Agricultural Bioterrorism Protection Act of 2002.

7 CFR Part 3015—USDA Uniform Federal Assistance Regulations, implementing OMB directives (*i.e.*, OMB Circular Nos. A–21 and A–122) and incorporating provisions of 31 U.S.C. 6301–6308 (formerly the Federal Grant and Cooperative Agreement Act of 1977, Pub. L. 95–224), as well as general policy requirements applicable to recipients of Departmental financial assistance.

7 CFR Part 3017—USDA implementation of Governmentwide Debarment and Suspension (Nonprocurement) and Governmentwide Requirements for Drug-Free Workplace (Grants).

7 CFR Part 3018—USDA implementation of Restrictions on Lobbying. Imposes prohibitions and requirements for disclosure and certification related to lobbying on recipients of Federal contracts, grants, cooperative agreements, and loans.

7 CFR Part 3019—USDA implementation of OMB Circular A–110, Uniform Administrative Requirements for Grants and Other Agreements With Institutions of Higher Education, Hospitals, and Other Nonprofit Organizations.

7 CFR Part 3052—USDA implementation of OMB Circular No. A–133, Audits of States, Local Governments, and Non-profit Organizations.

7 CFR Part 3407—CSREES procedures to implement the National Environmental Policy Act of 1969, as amended.

29 U.S.C. 794 (sec. 504, Rehabilitation Act of 1973) and 7 CFR Part 15b (USDA implementation of statute)—prohibiting discrimination based upon physical or mental handicap in Federally assisted programs.

35 U.S.C. 200 *et seq.*—Bayh-Dole Act, controlling allocation of rights to inventions made by employees of small business firms and domestic nonprofit organizations, including universities, in Federally assisted programs (implementing regulations are contained in 37 CFR part 401).

*E. Safety*

Safety is the freedom from those conditions that can cause death, injury, occupational illness, damage to or loss of equipment or property, or damage to the environment. NASA's safety priority is to protect: (1) The public, (2) astronauts and pilots, (3) the NASA workforce (including employees working under NASA award instruments), and (4) high-value equipment and property.

*F. Confidential Aspects of Applications and Awards*

When an application results in an award, it becomes a part of the record of CSREES transactions, available to the public upon specific request. Information that the CSREES Administrator determines to be of a confidential, privileged, or proprietary nature will be held in confidence to the extent permitted by law. Therefore, any information that the applicant wishes to have considered as confidential, privileged, or proprietary should be clearly marked within the application. The original copy of an application that does not result in an award (including those that are withdrawn) will be retained by CSREES for a period of one year. Other copies will be destroyed. Such an application will be released only with the consent of the applicant or to the extent required by law. An application may be withdrawn at any time prior to the final action thereon; however withdrawn applications normally will not be returned.

*G. Regulatory Information*

For the reasons set forth in the final Rule-related Notice to 7 CFR part 3015, subpart V (48 FR 29114, June 24, 1983), this program is excluded from the scope of the Executive Order 12372 which requires intergovernmental consultation with State and local officials. Under the provisions of the Paperwork Reduction Act of 1995 (44 U.S.C. chapter 35), the collection of information requirements

contained in this notice have been approved under OMB Document No. 0524–0039.

*H. Grants.gov Implementation Plans*

Grants.gov is an Internet Web site for grant and other financial assistance information (*e.g.*, allows grant seekers to find funding opportunities). It also will serve to facilitate electronic transmission of information pertaining to grants and other financial assistance information (*e.g.*, electronic application submission).

Beginning in February 2004, CSREES plans to initiate, on a limited basis, the receipt of applications electronically through the Grants.gov (*http://www.grants.gov*) storefront. The ability to expand the plan for electronically submitting applications is contingent on the success of the initial electronic application submissions. Detailed information about CSREES' Grants.gov plans, including important announcements, program implementation, and detailed requirements, is posted on the CSREES' Web site, *http://www.reeusda.gov/egov/csrees/implementation.htm,* which will be updated as appropriate. It is suggested that this site be visited periodically for important updates.

*I. DUNS Number*

A Dun and Bradstreet (D&B) Data Universal Numbering System (DUNS) number is a unique nine-digit sequence recognized as the universal standard for identifying and keeping track of over 70 million businesses worldwide. A **Federal Register** notice of final policy issuance (68 FR 38402) requires a DUNS number in every application (*i.e.*, hard copy and electronic) for a grant or cooperative agreement (except applications from individuals) submitted on or after October 1, 2003. Therefore, potential applicants should verify that they have a DUNS number or take the steps needed to obtain one. For information about how to obtain a DUNS number go to *http://www.grants.gov.* Please note that the registration may take up to 14 business days to complete.

*J. Required Registration for Grants.gov*

The Central Contract Registry (CCR) is a database that serves as the primary Government repository for contractor information required for the conduct of business with the Government. This database will also be used as a central location for maintaining organizational information for organizations seeking and receiving grants from the Government. Such organizations must register in the CCR prior to the submission of applications via Grants.gov (a DUNS number is needed for CCR registration). For information about how to register in the CCR visit *http://www.grants.gov.* Allow a minimum of 5 days to complete the CCR registration.

Done at Washington, DC, this 21st day of November, 2003.

**Colien Hefferan,**

*Administrator, Cooperative State Research, Education, and Extension Service.*

[FR Doc. 03–29761 Filed 11–28–03; 8:45 am]

BILLING CODE 3410–22–P

## DEPARTMENT OF AGRICULTURE

### Forest Service

### Ash Creek Fire Salvage, Umpqua National Forest, Douglas County, OR

**AGENCY:** Forest Service, USDA.

**ACTION:** Cancellation notice.

**SUMMARY:** On March 20, 2003, a Notice of Intent (NOI) to prepare an environmental (EIS) for the Ash Creek Fire Salvage on the Tiller Ranger District of the Umpqua National Forest, was published in the **Federal Register** (68 FR 13666). Forest Service has decided to cancel the preparation of this EIS. The NOI is hereby rescinded.

**FOR FURTHER INFORMATION CONTACT:** Questions may be addressed to Alan Baumann, Timber Management Assistant, Tiller Ranger District, 27812 Tiller Trail Highway, Tiller, Oregon 97484, telephone: 541–825–3140.

Dated: November 18, 2003.

**James A. Caplan,**

*Forest Supervisor.*

[FR Doc. 03–29786 Filed 11–28–03; 8:45 am]

BILLING CODE 3410–11–M

## DEPARTMENT OF AGRICULTURE

### Forest Service

### Willamette Province Advisory Committee

**AGENCY:** Forest Service, USDA.

**ACTION:** Notice of meeting.

**SUMMARY:** The Williamette Province Advisory Committee (PAC) will meet in Salem, Oregon. The purpose of the meeting is to discuss issues pertinent to the implementation of the Northwest Forest Plan (NFP) and to provide advice to federal land managers in the Province.

**DATES:** The meeting will be held December 11, 2003.

**ADDRESSES:** The meeting will be held at the Salem District Office of the Bureau of Land Management, 1717 Fabry Road, Salem, Oregon. Send written comments to Neal Forrester, Williamette Province Advisory Committee, c/o Willimette National Forest, P.O. Box 10607, Eugene, Oregon 97440, (541) 225–6436 or electronically to *nforrester@fs.fed.us.*

**FOR FURTHER INFORMATION CONTACT:** Neal Forrester, Williamette National Forset (541) 225–6436.

**SUPPLEMENTARY INFORMATION:** The meeting is open to the public. Committee discussion is limited to PAC members. However, persons who wish to bring matters to the attention of the Committee may file written statements with the PAC staff before or after the meeting. A public forum will be provided and individuals will have the opportunity to address the PAC. Oral comments will be limited to three minutes.

Dated: November 24, 2003.

**Dallas J. Emch,**

*Forest Supervisor, Willamette National Forest.*

[FR Doc. 03–29787 Filed 11–28–03; 8:45 am]

BILLING CODE 3410–11–M

## DEPARTMENT OF AGRICULTURE

### Grain Inspection, Packers and Stockyards Administration

**[03–04–A]**

### Opportunity for Designation in the East Indiana (IN), Fremont (NE), and Titus (IN) Areas, and Request for Comments on the Official Agencies Serving These Areas

**AGENCY:** Grain Inspection, Packers and Stockyards Administration, USDA.

**ACTION:** Notice.

**SUMMARY:** The designations of the official agencies listed below will end in June 2004. Grain Inspection, Packers and Stockyards Administration (GIPSA) is asking persons interested in providing official services in the areas served by these agencies to submit an application for designation. GIPSA is also asking for comments on the quality of services provided by these currently designated agencies: East Indiana Grain Inspection, Inc. (East Indiana); Fremont Grain Inspection Department, Inc. (Fremont); and Titus Grain Inspection, Inc. (Titus).

**DATES:** Applications and comments must be postmarked or electronically dated on or before January 2, 2004.

**ADDRESSES:** Submit applications and comments to USDA, GIPSA, Janet M. Hart, Chief, Review Branch, Compliance

Division, STOP 3604, Room 1647–S, 1400 Independence Avenue, SW., Washington, DC 20250–3604; Fax (202) 690–2755. If an application is submitted by FAX, GIPSA reserves the right to request an original application. All applications and comments will be made available for public inspection at Room 1647–S, 1400 Independence Avenue, SW., during regular business hours.

**FOR FURTHER INFORMATION CONTACT:** Janet M. Hart at (202) 720–8525, e-mail *Janet.M.Hart@usda.gov.*

**SUPPLEMENTARY INFORMATION:** This Action has been reviewed and determined not to be a rule or regulation as defined in Executive Order 12866 and Departmental Regulation 1512–1; therefore, the Executive Order and Departmental Regulation do not apply to this Action.

Section 7(f)(1) of the United States Grain Standards Act, as amended (Act), authorizes GIPSA's Administrator to designate a qualified applicant to provide official services in a specified area after determining that the applicant is better able than any other applicant to provide such official services.

Section 7(g)(1) of the Act provides that designations of official agencies shall end not later than triennially and may be renewed according to the criteria and procedures prescribed in Section 7(f) of the Act.

**1. Current Designations Being Announced for Renewal**

| Official agency | Main office | Designation start | Designation end |
|---|---|---|---|
| East Indiana | Muncie, IN | 9/01/2001 | 6/30/2004 |
| Fremont | Fremont, NE | 9/01/2001 | 6/30/2004 |
| Titus | West Lafayette, IN | 9/01/2001 | 6/30/2004 |

a. Pursuant to section 7(f)(2) of the Act, the following geographic area, in the States of Indiana and Ohio, is assigned to East Indiana.

In Indiana:

Bounded on the North by the northern and eastern Grant County lines; the northern Blackford, and Jay County lines;

Bounded on the East by the eastern Jay, Randolph, Wayne, and Union County lines;

Bounded on the South by the southern Union and Fayette County lines; the eastern Rush County line south to State Route 244; State Route 244 west to the Rush County line; and

Bounded on the West by the western Rush and Henry County lines; the southern Madison County line west to State Route 13; State Route 13 north to State Route 132; State Route 132 northwest to Madison County; the western and northern Madison County lines; the northern Delaware County line; the western Blackford County line north to State Route 18; State Route 18 west to County Highway 900E; County Highway 900E north to the northern Grant County line.

Darke County, Ohio.

b. Pursuant to section 7(f)(2) of the Act, the following geographic area, in the States of Iowa and Nebraska, is assigned to Fremont.

Carroll (west of U.S. Route 71); Clay (west of U.S. Route 71); Crawford; Dickinson (west of U.S. Route 71); Harrison (east of State Route 183); O'Brien (north of B24 and east of U.S. Route 59); Osceola (east of U.S. Route 59); and Shelby Counties, Iowa.

In Nebraska:

Bounded on the North by U.S. Route 20 east to the Pierce County line; the eastern Pierce County line; the northern Wayne, Cuming, and Burt County lines east to the Missouri River;

Bounded on the East by the Missouri River south-southeast to State Route 91; State Route 91 west to the Dodge County line; the eastern and southern Dodge County lines west to U.S. Route 77; U.S. Route 77 south to the Saunders County line;

Bounded on the South by the southern Saunders, Butler, and Polk County lines; and

Bounded on the West by the western Polk County line north to the Platte River; the Platte River northeast to the western Platte County line; the western and northern Platte County lines east to U.S. Route 81; U.S. Route 81 north to U.S. Route 20.

The following grain elevators, located outside of the above contiguous geographic area, are part of this geographic area assignment: Farmers Cooperative, and Krumel Grain and Storage, both in Wahoo, Saunders County, Nebraska (located inside Omaha Grain Inspection Service, Inc.'s, area).

Fremont's assigned geographic area does not include the following grain elevators inside Fremont's area which have been and will continue to be serviced by the following official agencies: Hastings Grain Inspection, Inc.: Huskers Cooperative Grain Company, Columbus, Platte County, Nebraska; and Omaha Grain Inspection Service, Inc.: United Farmers Coop, Rising City, Butler County, Nebraska; and United Farmers Coop, Shelby, Polk County, Nebraska.

c. Pursuant to Section 7(f)(2) of the Act, the following geographic area, in the State of Indiana, is assigned to Titus.

Bounded on the North by the northern Pulaski County line;

Bounded on the East by the eastern and southern Pulaski County lines; the eastern White County line; the eastern Carroll County line south to State Route 25; State Route 25 southwest to Tippecanoe County; the eastern Tippecanoe County line;

Bounded on the South by the southern Tippecanoe County line; the eastern and southern Fountain County lines west to U.S. Route 41; and

Bounded on the West by U.S. Route 41 north to the northern Benton County line; the northern Benton County line east to State Route 55; State Route 55 north to U.S. Route 24; U.S. Route 24 east to the White County line; the western White and Pulaski County lines.

The following grain elevators, located outside of the above contiguous geographic area, are part of this geographic area assignment: Boswell Chase Grain, Boswell, Benton County; ADM, Dunn, Benton County; ADM, Raub, Benton County (located inside Champaign-Danville Grain Inspection Departments, Inc.'s, area); and The Andersons, Delphi, Carroll County; Frick Services, Inc., Leiters Ford, Fulton County; and Cargill, Inc., Linden, Montgomery County (located inside Frankfort Grain Inspection, Inc.'s, area).

Titus' assigned geographic area does not include the following grain elevators inside Titus' area which have been and will continue to be serviced by the following official agency: Schneider Inspection Service, Inc.: Cargill, Inc., and Farmers Grain, both in Winamac, Pulaski County.

**2. Opportunity for Designation**

Interested persons, including East Indiana, Fremont, and Titus, are hereby given the opportunity to apply for designation to provide official services in the geographic areas specified above under the provisions of section 7(f) of the Act and section 800.196(d) of the regulations issued thereunder. Designation in the specified geographic areas is for the period beginning July 1, 2004, and ending June 30, 2007. Persons wishing to apply for designation should contact the Compliance Division at the address listed above for forms and information, or obtain applications at

the GIPSA Web site, *http://www.usda.gov/gipsa/oversight/parovreg.htm.*

**3. Request for Comments**

GIPSA also is publishing this notice to provide interested persons the opportunity to present comments on the quality of services for the East Indiana, Fremont, and Titus official agencies. In commenting on the quality of services, commenters are encouraged to submit pertinent data including information on the timeliness, cost, and scope of services provided. All comments must be submitted to the Compliance Division at the above address.

Applications, comments, and other available information will be considered in determining which applicant will be designated.

**Authority:** Pub. L. 94–582, 90 Stat. 2867, as amended (7 U.S.C. 71 *et seq.*).

**Donna Reifschneider,**

*Administrator, Grain Inspection, Packers and Stockyards Administration.*

[FR Doc. 03–29555 Filed 11–28–03; 8:45 am]

BILLING CODE 3410–EN–P

## DEPARTMENT OF AGRICULTURE

### Grain Inspection, Packers and Stockyards Administration

**[03–02–S]**

### Designation for the Frankfort (IN), Indianapolis (IN), and Virginia Areas

**AGENCY:** Grain Inspection, Packers and Stockyards Administration, USDA.

**ACTION:** Notice.

**SUMMARY:** Grain Inspection, Packers and Stockyards Administration (GIPSA) announces designation of the following organizations to provide official services under the United States Grain Standards Act, as amended (Act):

Frankfort Grain Inspection, Inc. (Frankfort);

Indianapolis Grain Inspection & Weighing Service, Inc. (Indianapolis); and

Virginia Department of Agriculture and Consumer Services (Virginia).

**EFFECTIVE DATE:** January 1, 2004.

**ADDRESSES:** USDA, GIPSA, Janet M. Hart, Chief, Review Branch, Compliance Division, STOP 3604, Room 1647–S, 1400 Independence Avenue, SW., Washington, DC 20250–3604.

**FOR FURTHER INFORMATION CONTACT:** Janet M. Hart at 202–720-8525, e-mail *Janet.M.Hart@usda.gov.*

**SUPPLEMENTARY INFORMATION:** This action has been reviewed and determined not to be a rule or regulation as defined in Executive Order 12866 and Departmental Regulation 1512–1; therefore, the Executive Order and Departmental Regulation do not apply to this action.

In the May 22, 2003, **Federal Register** (68 FR 27982), GIPSA asked persons interested in providing official services in the geographic areas assigned to the official agencies named above to submit an application for designation. Applications were due by July 1, 2003.

Frankfort, Indianapolis, and Virginia were the sole applicants for designation to provide official services in the entire area currently assigned to them, so GIPSA did not ask for additional comments on them.

GIPSA evaluated all available information regarding the designation criteria in Section 7(f)(l)(A) of the Act and, according to Section 7(f)(l)(B), determined that Idaho, Lewiston, Ohio Valley, and Utah are able to provide official services in the geographic areas specified in the May 22, 2003, **Federal Register**, for which they applied. Interested persons may obtain official services by calling the telephone numbers listed below.

| Official agency | Headquarters location and telephone | Designation Start—End |
|---|---|---|
| Frankfort | Frankfort, IN 765–258–3624 | 1/01/2004–12/31/2006 |
| Indianapolis | Indianapolis, IN 317–899–2337 | 1/01/2004–12/31/2006 |
| Virginia | Richmond, VA 804–786–3936 | 1/01/2004–12/31/2006 |

**Authority:** Pub. L. 94–582, 90 Stat. 2867, as amended (7 U.S.C. 71 *et seq.*).

**Donna Reifschneider,**

*Administrator, Grain Inspection, Packers and Stockyards Administration.*

[FR Doc. 03–29556 Filed 11–28–03; 8:45 am]

BILLING CODE 3410–EN–P

## DEPARTMENT OF AGRICULTURE

### Natural Resources Conservation Service

### Notice of Proposed Changes in the National Handbook of Conservation Practices

**AGENCY:** Natural Resources Conservation Service, USDA.

**ACTION:** Notice and request for comments.

**SUMMARY:** Notice is hereby given of the intention of the Natural Resources Conservation Service (NRCS) to issue a series of new or revised conservation practice standards in its National Handbook of Conservation Practices. These standards include: Irrigation Water Management, Salinity and Sodic Soil Management, Silvopasture Establishment, Vertical Drain, and Well Water Testing. These standards are used to convey national guidance in developing Field Office Technical Guide Standards used in the States and the Pacific Basin and Caribbean Areas. NRCS State Conservationists and Directors for the Pacific Basin and Caribbean Areas who choose to adopt these practices for use within their States/Areas will incorporate them into Section IV of their Field Office Technical Guides. These practices may be used in resource management systems that treat highly erodible land, or on land determined to be wetland.

**EFFECTIVE DATES:** Comments will be received for a 30-day period, starting on the date of this publication. This series of new or revised conservation practice standards will be adopted after the close of the 30-day period.

**FOR FURTHER INFORMATION CONTACT:** Single copies of these standards are available from NRCS–CED in Washington, DC. Submit individual inquiries and return any comments in writing to William Hughey, National Agricultural Engineer, Natural Resources Conservation Service, Post Office Box 2890, Room 6139–S, Washington, DC 20013–2890. The telephone number is (202) 720–5023. The standards are also available, and can be downloaded from the Internet, at: *http://www.ftw.nrcs.usda.gov/practice_stds.html.*

**SUPPLEMENTARY INFORMATION:** Section 343 of the Federal Agriculture Improvement and Reform Act of 1996 requires NRCS to make available, for public review and comment, proposed revisions to conservation practice standards used to carry out the highly erodible land and wetland provisions of

the law. For the next 30 days, NRCS will receive comments on the proposed changes. Following that period, a determination will be made by NRCS regarding disposition of those comments, and a final determination of change will be made.

Signed in Washington, DC, on November 19, 2003.

**Thomas A. Weber,**

*Associate Chief, Natural Resources Conservation Service.*

[FR Doc. 03–29764 Filed 11–28–03; 8:45 am]

**BILLING CODE 3410–16–P**

## DEPARTMENT OF COMMERCE

### Bureau of Industry and Security

**[Docket No. 031114279–3279–01}**

### Impact of Implementation of the Chemical Weapons Convention on Commercial Activities Involving ''Schedule 1'' Chemicals Through Calendar Year 2003

**AGENCY:** Bureau of Industry and Security, Commerce.

**ACTION:** Notice of inquiry.

**SUMMARY:** The Bureau of Industry and Security (BIS) is seeking public comments on the impact that implementation of the Chemical Weapons Convention has had on commercial activities involving ''Schedule 1'' chemicals through calendar year 2003. This notice of inquiry is part of an effort to collect information to assist in the preparation of the annual Presidential certification required under Condition 9 of Senate Resolution 75, April 24, 1997, in which the Senate gave its advice and consent to the ratification of the Chemical Weapons Convention.

**DATES:** Comments are due December 22, 2003.

**ADDRESSES:** Written comments (three copies) should be submitted to Willard Fisher, Regulatory Policy Division, Office of Exporter Services, Bureau of Industry and Security, U.S. Department of Commerce, 14th Street and Pennsylvania Avenue, NW., Room 2705, Washington, DC 20230. In order to meet the due date for comments, single copies may be faxed to (202) 482–3355, provided that you follow up by submitting the appropriate number (three copies) of written comments.

**FOR FURTHER INFORMATION CONTACT:** For questions on the Chemical Weapons Convention requirements for ''Schedule 1'' chemicals, contact Larry Denyer, Treaty Compliance Division, Office of Nonproliferation Controls and Treaty Compliance, Bureau of Industry and Security, U.S. Department of Commerce, Phone: (703) 605–4400. For questions on the submission of comments, contact Willard Fisher, Regulatory Policy Division, Office of Exporter Services, Bureau of Industry and Security, U.S. Department of Commerce, Phone: (202) 482–2440.

**SUPPLEMENTARY INFORMATION:**

### Background

In its resolution to advise and consent to the ratification of the Chemical Weapons Convention (Convention) (S. Res. 75, April 24, 1997), the Senate included several conditions. Condition 9 of Senate Resolution 75, titled ''Protection of Advanced Biotechnology,'' provides that the President shall certify to the Congress on an annual basis that ''* * * the legitimate commercial activities and interests of chemical, biotechnology, and pharmaceutical firms in the United States are not being significantly harmed by the limitations of the Convention on access to, and production of, those chemicals and toxins listed in Schedule 1 * * * ''. In 2000, 2001, and 2002, the President certified to Congress that these firms were not significantly harmed by the Convention's Schedule 1 limitations. The Bureau of Industry and Security is collecting data to assist in determining the impact, if any, that the implementation of the Convention's requirements have had on commercial ''Schedule 1'' activities through calendar year 2003.

The Convention on the Prohibition of the Development, Production, Stockpiling, and Use of Chemical Weapons and Their Destruction, commonly called the Chemical Weapons Convention (CWC), is an international arms control treaty that establishes the Organization for the Prohibition of Chemical Weapons (OPCW) to implement the verification provisions of the treaty. The CWC imposes a number of obligations on countries that have ratified the Convention (States Parties), including enactment of legislation to prohibit the production, storage, and use of chemical weapons, and establishment of a National Authority for liaison with the OPCW and other States Parties. The CWC also requires States Parties to implement a comprehensive data declaration and inspection regime to provide transparency and to verify that both the public and private sectors of States Parties are not engaged in activities prohibited under the CWC.

''Schedule 1'' chemicals are those toxic chemicals and precursors identified in the Convention as posing a high risk to the object and purpose of the Convention. The ''Schedule 1'' chemicals are set forth in the Convention's ''Annex on Chemicals,'' as well as in Supplement No. 1 to part 712 of the Chemical Weapons Convention Regulations (15 CFR part 712).

The ''Schedule 1'' provisions of the Convention that affect commercial activities are implemented through part 712 of the Chemical Weapons Convention Regulations and parts 742 and 745 of the Export Administration Regulations, both administered by the Bureau of Industry and Security. These regulations:

(1) Prohibit the import of ''Schedule 1'' chemicals from States not Party to the Convention (15 CFR 712.2);

(2) Require annual declarations by certain facilities engaged in the production of ''Schedule 1'' chemicals in excess of 100 grams aggregate per calendar year (*i.e.*, declared ''Schedule 1'' facilities) for purposes not prohibited by the Convention (15 CFR 712.3(a)(2) and (a)(3));

(3) Require government approval of ''declared Schedule 1'' facilities (15 CFR 712.3(e));

(4) Provide that ''declared Schedule 1'' facilities are subject to initial and routine inspection by the Organization for the Prohibition of Chemical Weapons (15 CFR 712.3(d));

(5) Require 200 days advance notification of establishment of new ''Schedule 1'' production facilities producing greater than 100 grams aggregate of ''Schedule 1'' chemicals per calendar year (15 CFR 712.4);

(6) Require advance notification and annual reporting of all imports and exports of ''Schedule 1'' chemicals to, or from, other States Parties to the Convention (15 CFR 712.5, 742.18(a)(1) and 745.1); and

(7) Prohibit the export of ''Schedule 1'' chemicals to States not Party to the Convention (15 CFR 742.18).

### Discussion and Request for Comments

In order to assist in determining whether the legitimate commercial activities and interests of chemical, biotechnology, and pharmaceutical firms in the United States are being significantly harmed by the limitations of the Convention on access to, and production of, ''Schedule 1'' chemicals, BIS is seeking public comments on any effects that implementation of the Chemical Weapons Convention has had on commercial activities involving ''Schedule 1'' chemicals through calendar year 2003.

**Submission of Comments**

All comments must be submitted to the address indicated in this notice. The Department requires that all comments be submitted in written form.

The Department encourages interested persons who wish to comment to do so at the earliest possible time. The period for submission of comments will close on December 22, 2003. The Department will consider all comments received before the close of the comment period. Comments received after the end of the comment period will be considered if possible, but their consideration cannot be assured. The Department will not accept comments accompanied by a request that a part or all of the material be treated confidentially because of its business proprietary nature or for any other reason. The Department will return such comments and materials to the persons submitting the comments and will not consider them. All comments submitted in response to this notice will be a matter of public record and will be available for public inspection and copying.

The Office of Administration, Bureau of Industry and Security, U.S. Department of Commerce, displays public comments on the BIS Freedom of Information Act (FOIA) Web site at *http://www.bis.doc.gov/foia.* This office does not maintain a separate public inspection facility. If you have technical difficulties accessing this web site, please call BIS's Office of Administration, at (202) 482–0637, for assistance.

Dated: November 21, 2003.

**Peter Lichtenbaum,**

*Assistant Secretary for Export Administration.*

[FR Doc. 03–29836 Filed 11–28–03; 8:45 am]

**BILLING CODE 3510–33–P**

---

## DEPARTMENT OF COMMERCE

### Bureau of Industry and Security

**[Docket No. 02–BIS–11]**

### Action Affecting Export Privileges; Ahwaz Steel Commercial & Technical Service Gmbh

In the Matter of: Ahwaz Steel Commercial & Technical Service Gmbh, Tersteegenstr. 10, 40474 Dusseldorf, Germany, Respondent.

**Order**

The Bureau of Industry and Security, United States Department of Commerce (''BIS''), having initiated an administrative proceeding against Ahwaz Steel Commercial & Technical Service Gmbh (''ASCOTEC)'' pursuant to section 13(c) of the Export Administration Act of 1979, as amended (50 U.S.C. app. 2401–2420 (2000)) (''Act''),[1] and the Export Administration Regulations (currently codified at 15 CFR parts 730–774 (2003)) (''Regulations'')[2] based on allegations in a charging letter issued to ASCOTEC that alleged that ASCOTEC committed eight violations of the Regulations, specifically that ASCOTEC committed violations of the Regulations by causing the export of items from the United States to Iran without the required authorization from the Office of Foreign Assets Control, Department of the Treasury, as required by the Regulations on eight occasions; and

BIS and ASCOTEC having entered into a Settlement Agreement pursuant to Section 766.18(b) of the Regulations whereby they agreed to settle this matter in accordance with the terms and conditions set forth therein, and the terms of the Settlement Agreement having been approved by me;

*It Is Therefore Ordered:*

*First,* that, for a period of five years from the date of this Order (hereinafter the ''Denial Period''), Ahwaz Steel Commercial & Technical Service Gmbh, Terteegenstr. 10,40474 Dusseldorf, Germany, shall be denied its U.S. export privileges as described herein. ASCOTEC, and all of its successors, assigns, officers, representatives, agents, and employees, may not participate, directly or indirectly, in any way in any transaction involving any commodity, software, or technology (hereinafter collectively referred to as ''item'') exported or to be exported from the United States that is subject to the Regulations, or in any other activity subject to the Regulations, including, but not limited to:

A. Applying for, obtaining, or using any license, License Exception, or export control document;

B. Carrying on negotiations concerning, or ordering, buying, receiving, using, selling, delivering, storing, disposing of, forwarding, transporting, financing, or otherwise servicing in any way, any transaction involving any item exported or to be exported from the United States that is subject to the Regulations, or in any other activity subject to the Regulations; or

C. Benefitting in any way from any transaction involving any item exported or to be exported from the United states that is subject to the Regulations, or in any other activity subject to the Regulations.

*Second,* that, during the Denial Period, no person may, directly or indirectly, do any of the following:

A. Export or reexport to or on behalf of a person subject to this Order any item subject to the Regulations;

B. Take any action that facilitates the acquisition or attempted acquisition by a person subject to this Order of the ownership, possession, or control of any item subject to the Regulations that has been or will be exported from the United States, including financing or other support activities related to a transaction whereby a person subject to this order acquires or attempts to acquire such ownership, possession or control;

C. Take any action to acquire from or to facilitate the acquisition or attempted acquisition from a person subject to this Order of any item subject to the Regulations that has been exported from the United States;

D. Obtain from a person subject to this Order in the United States any item subject to the Regulations with knowledge or reason to know that the item will be, or is intended to be, exported from the United States; or

E. Engage in any transaction to service any item subject to the Regulations that has been or will be exported from the United States and which is owned, possessed or controlled by a person subject to this Order, or service any item, of whatever origin, that is owned, possessed or controlled by a person subject to this Order if such service involves the use of any item subject to the Regulations that has been or will be exported from the United States. For purposes of this paragraph, servicing means installation, maintenance, repair, modification or testing.

*Third,* that after notice opportunity for comment as provided in § 766.23 of the Regulations, any other person, firm, corporation, or business organization

---

[1] From August 21, 1994 through November 12, 2000, the Act was in lapse. During that period, the President, through Executive Order 12924, which had been extended by successive Presidential Notices, the last of which was issued on August 3, 2000 (3 CFR, 2000 Comp. 397 (2001)), continued the Regulations in effect under the International Emergency Economic Powers Act (50 U.S.C. 1701–1706 (2000)) (IEEPA). On November 13, 2000, the Act was reauthorized and it remained in effect through August 20, 2001. The Act expired on August 20, 2001. Executive Order 13222 of August 17, 2001 (3 CFR 2001 Comp., p. 783 (2002)), which has been extended by successive Presidential Notices, the most recent being that of August 7, 2003 (68 FR 47833, August 11, 2003), continues the Regulations in effect under IEEPA.

[2] The Regulations are currently codified in the Code of Federal Regulations at 15 CFR, parts 730–774 (2003). The violations charged occurred from 1999 to 2002. The Regulations governing the violations are codified at 15 CFR, parts 730–774 (1999–2002). They are substantially the same as the 2003 version of the Regulations which govern the procedural aspects of this case.

related to the denied person by affiliation, ownership, control, or position of responsibility in the conduct of trade or related services may also be made subject to the provisions of this Order.

*Fourth,* that this Order does not prohibit any export, reexport, or other transaction subject to the Republicans where the only items involved that are subject to the Regulations are the foreign-produced direct product of U.S.-origin technology.

*Fifth,* that, as authorized by § 766.18(c) of the Regulations, the final three years of the denial period set forth above shall be suspended for five years from the date of entry of this Order, and shall thereafter be waived, provided that, during the period of suspension, ASCOTEC has not committed a violation of the Act or any regulation, license, or order, including this Order, issued thereunder.

*Sixth,* that a civil penalty of $50,000 is assessed against ASCOTEC which shall be paid to the U.S. Department of Commerce within thirty days from the date of entry of this Order. Payment shall be made in the manner specified in the attached instructions.

*Seventh,* that, pursuant to the Debt Collection act of 1982, as amended (31 U.S.C. 3701–3720E (1983 and Supp. 2000)), the civil penalty owed under this Order accrues interest as more fully described in the attached Notice, and, if payment is not made by the due date specified herein, ASCOTEC will be assessed, in addition to the full amount of the civil penalty and interest, a penalty charge and an administrative charge, as more fully described in the attached Notice.

*Eighth,* that the timely payment of the civil penalty set forth above is hereby made a condition to the granting, restoration, or continuing validity of any export license, license exception permission, or privilege granted, or to be granted, to ASCOTEC.

*Ninth,* that the charging letter, the Settlement Agreement, and this Order shall be made available to the public.

*Tenth,* that a copy of this Order shall be delivered to the Honorable Edwin M. Bladen, Administrative Law Judge, United States Coast Guard, 915 Second Avenue, Room 3448, Jackson Federal Building, Seattle, Washington 98174; and to the United States Coast Guard ALJ Docketing Center, 40 Gay Street, Baltimore, Maryland 21202–4022, providing notification that case number 02–BIS–11 naming ASCOTEC as a respondent is withdrawn from adjudication, as provided by § 766.18(b) of the Regulations.

This Order, which constitutes the final agency action in this matter, is effective immediately.

Entered this 17th day of November, 2003.

**Julie L. Myers,**

*Assistant Secretary of Commerce for Export Enforcement.*

### Instructions for Payment of Civil Penalty

1. The civil penalty check should be made payable to: U.S. Department of Commerce.

2. The check should be mailed to U.S. Department of Commerce, Bureau of Industry and Security, Export Enforcement Team, Room H–6877, 14th Street and Constitution Avenue, NW., Washington, DC 20230, Attn: Sharon Gardner.

### Notice

The Order to which this Notice is attached describes the reasons for the assessment of the civil monetary penalty. It also specifies the amount owed and the date by which payment of the civil penalty is due and payable.

Under the Debt Collection Act of 1982, as amended (31 U.S.C. 3701–3702E(2000)), and the Federal Claims Collection Standards (31 CFR part 900–904 (2003)), interest accrues on any and all civil monetary penalties owed and unpaid under the Order, from the date of the Order until paid in full. The rate of interest assessed respondent is the rate of the current value of funds to the U.S. Treasury on the date that the Order was entered. However, interest is waived on any portion paid within 30 days of the date of the Order. *See* 31 U.S.C. 3717 and 31 CFR 901.0.

The civil monetary penalty will be delinquent if not paid by the due date specified in the Order. If the penalty becomes delinquent, interest will continue to accrue on the balance remaining due and unpaid, and respondent will also be assessed both an administrative charge to cover the cost of processing and handling the delinquent claim and a penalty charge of six percent per years. However, although the penalty charge will be computed from the date that the civil penalty becomes delinquent, it will be assessed only on sums due and unpaid for over 90 days after that date. *See* 31 U.S.C. 3717 and 31 CFR 901.9.

The foregoing constitutes the initial written notice and demand to respondent in accordance with 901.2(b) of the Federal Claims Collection Standards (31 CFR 901.2(b)).

[FR Doc. 03–29782 Filed 11–28–03; 8:45 am]

BILLING CODE 3510–DT–M

## DEPARTMENT OF COMMERCE

**[Docket No. 02–BIS–10]**

## Bureau of Industry and Security

In the Matter of: Metal & Mineral Trade Sarl. Rue Pierre D'Aspelt, 1142 Luxembourg, Luxembourg, Respondent.

### Order

The Bureau of Industry and Security, United States Department of Commerce (''BIS''), having initiated an administration proceeding against Metal & Mineral Trade Sarl. (''MMT'') pursuant to section 13(c) of the Export Administration Act of 1979, as amended (50 U.S.C. app. 2401–2420 (2000)) (''Act''),[1] and the Export Administration Regulation (currently codified at 15 CFR parts 730–774 (2003)) (''Regulations''),[2] based on allegations in a charging letter issued to MMT that alleged that MMT committed six violations of the Regulations, specifically that MMT committed violations of the Regulations by aiding and abetting the export of items from the United States to Iran without the required authorization from the Office of Foreign Assets Control, Department of the Treasury, as required by the Regulations on two occasions; by causing the export of items from the United States to Iran without the required authorization from the Office of Foreign Assets Control, Department of the Treasury, as required by the Regulation on three occasions; and by acting with knowledge of a violation of the Regulations on one occasion; and

BIS and MMT having entered into a Settlement Agreement pursuant to

[1] From August 21, 1994 through November 12, 2000, the Act was in lapse. During that period, the President, through Executive Order 12924, which had been extended by successive Presidential Notices, the last of which was issued on August 3, 2000 (3 CFR, 2000 Comp. 397 (2001)), continued the Regulations in effect under the International Emergency Economic Powers Act (50 U.S.C. 1701–1706 (2000)) (IEEPA). On November 13, 2000, the Act was reauthorized and it remained in effect through August 20, 2001. The Act expired on August 20, 2001. Executive Order 13222 of August 17, 2001 (3 CFR, 2001 Comp., p. 783 (2002)), which has been extended by successive Presidential Notices, the most recent being that of August 7, 2003 (68 FR Reg. 47833, August 11, 2003), continues the Regulations in effect under IEEPA.

The Regulations are currently codified in the Code of Federal Regulations at 15 CFR Parts 730–774 (2003). The violations charged occurred from 1999 to 2002. The Regulations governing the violations are codified at 15 CFR parts 730–774 (1999–2002). They are substantially the same as the 2003 version of the Regulations which govern the procedural aspects of this case.

[2] The Regulations are currently codified in the Code of Federal Regulations at 15 CFR parts 730–774 (2003). The violations charged occurred from 1999 to 2002. The Regulations governing the violations are codified at 15 CFR parts 730–774 (1999–2002). They are substantially the same as the 2003 version of the Regulations which govern the procedural aspects of this case.

section 766.18(b) of the Regulations whereby they agreed to settle this matter in accordance with the terms and conditions set forth therein, and the terms of the Settlement Agreement having been approved by me; *It is Therefore Ordered:*

*First*, that, for a period of five years from the date of this Order (hereinafter the ''Denial Deriod''), Metal & Mineral Trade Sarl., Rue Pierre D'Aspelt, 1142 Luxembourg, Luxembourg, shall be denied its U.S. export privileges as described herein. MMT, and all of its successors, assigns, officers, representatives, agents, and employees, may not participate, directly or indirectly, in any way in any transaction involving any commodity, software, or technology (hereinafter collectively referred to as ''item'') exported or to be exported from the United States that is subject to the Regulations, or in any other activity subject to the Regulations, including, but not limited to:

A. Apply for, obtaining, or using any license, License Exception, or export control document;

B. Carrying on negotiations concerning, or ordering, buying, receiving, using, selling, delivering, storing, disposing of, forwarding, transporting, financing, or otherwise servicing in any way, any transaction involving any item exported or to be exported from the United States that is subject to the Regulations, or in any other activity subject to the Regulations; or

C. Benefiting in any way from any transaction involving any item exported or to be exported from the United States that is subject to the Regulations, or in any other activity subject to the Regulations.

*Second*, that, during the Denial Period, no person may, directly or indirectly, do any of the following:

A. Export or reexport to or on behalf of a person subject to this Order any item subject to the Regulations;

B. Take any action that facilitates the acquisition or attempted acquisition by a person subject to this Order of the ownership, possession, or control of any item subject to the Regulations that has been or will be exported from the United States, including financing or other support activities related to a transaction whereby a person subject to this order acquires or attempts to acquire such ownership, possession or control;

C. Take any action to acquire from or to facilitate the acquisition or attempted acquisition from a person subject to this Order of any item subject to the Regulations that has been exported from the United States;

D. Obtain from a person subject to this Order in the United States any item subject to the Regulations with knowledge or reason to know that the item will be, or is intended to be, exported from the United States; or

E. Engage in any transaction to service any item subject to the Regulations that has been or will be exported from the United States and which is owned, possessed or controlled by a person subject to this Order, or service any item, of whatever origin, that is owned, possessed or controlled by a person subject to this Order if such service involves the use of any item subject to the Regulations that has been or will be exported from the United States. For purposes of this paragraph, servicing means installation, maintenance, repair, modification or testing.

*Third,* that after notice and opportunity for comment as provided in section 766.23 of the Regulations, any other person, firm, corporation, or business organization related to the denied person by affiliation, ownership, control, or position of responsibility in the conduct of trade or related services may also be made subject to the provisions of this order.

*Fourth,* that this order does not prohibit any export, reexport, or other transaction subject to the Regulations where the only items involved that are subject to the Regulations are the foreign-produced direct product of U.S.-origin technology.

*Fifth,* that, as authorized by section 766.18(c) of the Regulations, the final three years of the Denial Period set forth above shall be suspended for five years from the date of entry of this Order, and shall thereafter be waived, provided that, during the period of suspension, MMT has not committed a violation of the Act or any regulation, license, or order, including this Order, issued thereunder.

*Sixth,* that a civil penalty of $35,000 is assessed against MMT which shall be paid to the U.S. Department of Commerce within thirty days from the date of entry of this Order. Payment shall be made in the manner specified in the attached instructions.

*Seventh,* that, pursuant to the Debt Collection Act of 1982, as amended (31 U.S.C. 3701–3720E (1983 and Supp. 2000)), the civil penalty owed under this Order accrues interest as more fully described in the attached Notice, and, if payment is not made by the due date specified herein, MMT will be assessed, in addition to the full amount of the civil penalty and interest, a penalty charge and an administrative charge, as more fully described in the attached Notice.

*Eighth,* that the timely payment of the civil penalty set forth above is hereby made a condition to the granting, restoration, or continuing validity of any export license, license exception, permission, or privilege granted, or to be granted, to MMT.

*Ninth,* that the charging letter, the Settlement Agreement, and this Order shall be made available to the public.

*Tenth,* that a copy of this Order shall be delivered to the Honorable Edwin M. Bladen, Administrative Law Judge, United States Coast Guard, 915 Second Avenue, Room 3448, Jackson Federal Building, Seattle, Washington 98174; and to the United States Coast Guard ALJ Docketing Center, 40 Gay Street, Baltimore, Maryland 21202–4022, providing notification that case number 02–BIS–10 naming MMT as a respondent is withdrawn from adjudication, as provided by § 766.18(b) of the Regulations.

This Order, which constitutes the final agency action in this matter, is effective immediately.

Entered this 17th day of November, 2003.

**Julie L. Myers,**

*Assistant Secretary of Commerce for Export Enforcement.*

[FR Doc. 03–29783 Filed 11–28–03; 8:45 am]

**BILLING CODE 3510–DT–M**

---

## DEPARTMENT OF COMMERCE

### International Trade Administration

### Export Trade Certificate of Review

**ACTION:** Notice of application.

**SUMMARY:** The Office of Export Trading Company Affairs (''OETCA''), International Trade Administration, U.S. Department of Commerce, has received an application for an Export Trade Certificate of Review. This notice summarizes the conduct for which certification is sought and requests comments relevant to whether the Certificate should be issued.

**FOR FURTHER INFORMATION CONTACT:** Jeffrey C. Anspacher, Director, Office of Export Trading Company Affairs, International Trade Administration, (202) 482–5131 (this is not a toll-free number) or e-mail at *oetca@ita.doc.gov.*

**SUPPLEMENTARY INFORMATION:** Title III of the Export Trading Company Act of 1982 (15 U.S.C. 4001–21) authorizes the Secretary of Commerce to issue Export Trade Certificates of Review. An Export Trade Certificate of Review protects the holder and the members identified in the Certificate from state and federal government antitrust actions and from private treble damage antitrust actions

for the export conduct specified in the Certificate and carried out in compliance with its terms and conditions. Section 302(b)(1) of the Export Trading Company Act of 1982 and 15 CFR 325.6(a) require the Secretary to publish a notice in the **Federal Register** identifying the applicant and summarizing its proposed export conduct.

**Request for Public Comments**

Interested parties may submit written comments relevant to the determination whether a Certificate should be issued. If the comments include any privileged or confidential business information, it must be clearly marked and a nonconfidential version of the comments (identified as such) should be included. Any comments not marked privileged or confidential business information will be deemed to be nonconfidential. An original and five (5) copies, plus two (2) copies of the nonconfidential version, should be submitted no later than 20 days after the date of this notice to: Office of Export Trading Company Affairs, International Trade Administration, U.S. Department of Commerce, Room 1104H, Washington, DC 20230. Information submitted by any person is exempt from disclosure under the Freedom of Information Act (5 U.S.C. 552). However, nonconfidential versions of the comments will be made available to the applicant if necessary for determining whether or not to issue the Certificate. Comments should refer to this application as ''Export Trade Certificate of Review, application number 03–00008.'' A summary of the application follows.

**Summary of Application**

*Applicant:* California Pistachio Export Council, LLC (''CPEC''), 5497 E. Olive Avenue, Fresno, California 93727.

*Contact:* Carter Brown, Esquire, Consultant to the applicant, Telephone: (202) 543–4455.

*Application No.:* 03–00008.

*Date Deemed Submitted:* November 19, 2003. Expedited Review of the application has been requested.

*Members (in addition to applicant):* A&P Growers Cooperative, Inc., Tulare, CA; Gold Coast Pistachios, Inc., Fresno, CA; Keenan Farms, Inc., Avenal, CA; Monarch Nut Company, Delano, CA; Nichols Pistachio, Hanford, CA; Primex Farms, LLC, Wasco, CA; and Setton Pistachio of Terra Bella, Inc., Terra Bella, CA.

CPEC seeks a Certificate to cover the following specific Export Trade, Export Markets, and Export Trade Activities and Methods of Operation:

**Export Trade**

1. *Products:* California in-shell and shelled pistachios, raw and roasted. Included within this definition are organically produced pistachios and flavored pistachios.

2. *Export Trade Facilitation Services (as they Relate to the Export of Products):* All export trade-related facilitation services, including but not limited to: development of trade strategy; sales, marketing, and distribution; foreign market development; promotion; and all aspects of foreign sales transactions, including export brokerage, freight forwarding, transportation, insurance, billing, collection, trade documentation, and foreign exchange; customs, duties, and taxes; and inspection and quality control.

*Export Markets*

The Export Markets include all parts of the world except the United States (the fifty states of the United States, the District of Columbia, the Commonwealth of Puerto Rico, the Virgin Islands, American Samoa, Guam, the Commonwealth of Northern Mariana Islands, and the Trust Territory of the Pacific Islands).

*Export Trade Activities and Methods of Operation*

1. CPEC, on its own behalf or on behalf of all or less than all of its Members, through CPEC or through Export Intermediaries (to the extent provided in section 1.g) may:

a. *Export Sales Price.* Establish sales price, minimum sales price, target sales price and/or minimum target sales price, and other terms of sale;

b. *Marketing and Distribution.* Conduct marketing and distribution of Products;

c. *Promotion.* Conduct joint promotion of Products;

d. *Quantities.* Agree on quantities of Products to be sold, provided each Member shall be required to dedicate only such quantity or quantities as each such Member shall independently determine;

e. *Market and Customer Allocation.*Allocate geographic areas or countries in the Export Markets and/or customers in the Export Markets among Members;

f. *Refusals to Deal.* Refuse to quote prices for Products, or to market or sell Products, to or for any customers in the Export Markets, or any countries or geographical areas in the Export Markets;

g. *Exclusive and Nonexclusive Export Intermediaries.* Enter into exclusive and nonexclusive agreements appointing one or more Export Intermediaries (as defined under ''Definitions'' paragraph 1) for the sale of Products with price, quantity, territorial and/or customer restrictions as provided in sections 1.a through 1.f, inclusive, above;

h. *Non-Member Activities.* Purchase Products from non-Members to fulfill specific sales obligations, provided that CPEC and/or its Members shall make such purchases only on a transaction-by-transaction basis and when the Members are unable to supply, in a timely manner, the requisite Products at a price competitive under the circumstances. In no event shall a non-Member be included in any deliberations concerning any Export Trade Activities; and

i. *Transportation Activities.* Negotiate favorable transportation rates (volume discounts) and consolidate shipments.

2. CPEC and its Members may exchange and discuss the following information:

a. Information about sales and marketing efforts for the Export Markets, activities and opportunities for sales of Products in the Export Markets, selling strategies for the Export Markets, sales for the Export Markets, contract and spot pricing in the Export Markets, projected demands in the Export Markets for Products, customary terms of sale in the Export Markets, prices and availability of Products from competitors for sale in the Export Markets, and specifications for Products by customers in the Export Markets; b. Information about the price, quality, quantity, source, and delivery dates of Products available from the Members to export;

c. Information about terms and conditions of contracts for sale in the Export Markets to be considered and/or bid on by CPEC and its Members;

d. Information about joint bidding or selling arrangements for the Export Markets and allocations of sales resulting from such arrangements among the Members;

e. Information about expenses specific to exporting to and within the Export Markets, including without limitation, transportation, trans-or intermodal shipments, insurance, inland freight to port, port storage, commissions, export sales, documentation, financing, customs, duties, and taxes;

f. Information about U.S. and foreign legislation and regulations, including federal marketing order programs, affecting sales for the Export Markets;

g. Information about CPEC or its Members' export operations, including without limitation, sales and distribution networks established by

CPEC or its Members in the Export Markets, and prior export sales by Members (including export price information); and

h. Information about export customer credit terms and credit history.

3. CPEC and its Members may prescribe the following conditions for admission of Members to CPEC and termination of membership in CPEC:

a. Membership shall be limited to Handlers as defined under ''Definitions'' paragraph 3.

b. Membership shall terminate on the occurrence of one or more of the following events:

i. Withdrawal or resignation of a Member;

ii. Expulsion approved by a majority of all Members;

iii. Death or permanent disability of a Member who is an individual, or the dissolution of a Member other than an individual; and

iv. The bankruptcy of a Member as provided in CPEC's Operating Agreement.

c. Members may be added to the Certificate, if the action is

i. Approved by a majority of the members, and

ii. Approved by the Secretary of Commerce, with the concurrence of the Attorney General, pursuant to an appropriately filed application to amend the Certificate; and

iii. Any new member must pay a pro-rata share of the start-up costs for the CPEC. This payment will be equally divided amongst the members who paid the initial start-up costs.

4. CPEC and its Members may meet to engage in the activities described in paragraphs 1 through 3 above.

*Definitions*

1. ''Export Intermediary'' means a person (including a Member) who acts as a distributor, sales representative, sales or marketing agent, or broker, or who performs similar functions, including providing, or arranging for the provision of Export Trade Facilitation Services.

2. ''Handle'' means engage in: (a) receiving pistachios; (b) hulling and drying pistachios; and/or (c) further preparing pistachios by sorting, sizing, shelling, roasting, cleaning, salting, and/or packaging for marketing in or transporting to any and all markets in the course of interstate or foreign commerce; provided, however, that transportation within the Production Area between Handlers and from the orchard to the processing facility is not handling.

3. ''Handler'' means a person who handles Pistachios grown in California.

4. ''Member'' means a person who has membership in the CPEC Export Trade Certificate of Review, and who has been certified as a ''Member'' within the meaning of § 325.2(1) of the Regulations (15 CFR 325.2(1) (2003).

5. ''Product'' means in-shell or shelled pistachios, roasted or raw produced in the Production Area.

6. ''Production Area'' means the State of California.

Dated: November 24, 2003.

**Jeffrey C. Anspacher,**

*Director, Office of Export Trading Company Affairs.*

[FR Doc. 03–29779 Filed 11–28–03; 8:45 am]

**BILLING CODE 3510–DR–P**

---

## DEPARTMENT OF COMMERCE

## National Oceanic and Atmospheric Administration

**[I.D. 112503A]**

## Endangered Species; File No. 1451

**AGENCY:** National Marine Fisheries Service (NMFS), National Oceanic and Atmospheric Administration (NOAA), Commerce.

**ACTION:** Receipt of application.

**SUMMARY:** Notice is hereby given that NMFS, Office of Sustainable Fisheries, 1315 East-West Highway, Silver Spring, Maryland, 20910, has applied in due form for a permit to take threatened and endangered sea turtles for purposes of scientific research.

**DATES:** Written or telefaxed comments must be received on or before December 31, 2003.

**ADDRESSES:** The application and related documents are available for review upon written request or by appointment in the following office(s):

Permits, Conservation and Education Division, Office of Protected Resources, NMFS, 1315 East-West Highway, Room 13705, Silver Spring, MD 20910; phone (301)713–2289; fax (301)713–0376; and

Southeast Region, NMFS, 9721 Executive Center Drive North, St. Petersburg, FL 33702–2432; phone (727)570–5301; fax (727)570–5320.

**FOR FURTHER INFORMATION CONTACT:** Carrie Hubard or Sarah Wilkin, (301)713–2289.

**SUPPLEMENTARY INFORMATION:** The subject permit is requested under the authority of the Endangered Species Act of 1973, as amended (ESA; 16 U.S.C. 1531 *et seq.*) and the regulations governing the taking, importing, and exporting of endangered and threatened species (50 CFR 222–226).

The applicant proposes to initiate a sea turtle observer program for the shark bottom longline fishery in the western North Atlantic and Gulf of Mexico. The incidental capture of sea turtles by the fishery is covered by the Biological Opinion for the Highly Migratory Species Fishery Management Plan for Atlantic Tunas, Swordfish, and Sharks. If issued, this permit would authorize only the sampling of the sea turtles incidentally caught in the fishery, as recommended in the Biological Opinion. Unless they are too large to be safely boated, captured turtles would be brought on board and identified, measured, weighed, PIT tagged, and have a biopsy sample taken for genetic research. Turtles would be dehooked and/or disentangled and subsequently released. The purpose of the observer program is to monitor the impact of bottom longlining on protected species and to obtain information on sea turtle populations. All observers would be trained in the sampling techniques and provided the proper equipment before sailing on a fishing vessel. In accordance with the fishery's Biological Opinion, the applicant requests authority to sample 12 loggerhead (*Caretta caretta*), 2 leatherback (*Dermochelys coriacea*) 2 Kemp's ridley (*Lepidochelys kempii*), 2 green (*Chelonia mydas*), and 2 hawksbill (*Eretmochelys imbricata*) turtles annually. The permit would be valid for a period of five years.

Written comments or requests for a public hearing on this application should be mailed to the Chief, Permits, Conservation and Education Division, F/PR1, Office of Protected Resources, NMFS, 1315 East-West Highway, Room 13705, Silver Spring, MD 20910. Those individuals requesting a hearing should set forth the specific reasons why a hearing on this particular request would be appropriate.

Comments may also be submitted by facsimile at (301)713–0376, provided the facsimile is confirmed by hard copy submitted by mail and postmarked no later than the closing date of the comment period. Please note that comments will not be accepted by e-mail or by other electronic media.

Dated: November 25, 2003.

**Stephen L. Leathery,**

*Chief, Permits, Conservation and Education Division, Office of Protected Resources, National Marine Fisheries Service.*

[FR Doc. 03–29829 Filed 11–28–03; 8:45 am]

**BILLING CODE 3510–22–S**

## COMMITTEE FOR THE IMPLEMENTATION OF TEXTILE AGREEMENTS

### Request for Public Comments on Commercial Availability Petition Under the Andean Trade Promotion and Drug Eradication Act (ATPDEA)

November 25, 2003.

**AGENCY:** Committee for the Implementation of Textile Agreements (CITA).

**ACTION:** Request for public comments concerning a petition for a determination that certain viscose rayon filament yarns cannot be supplied by the domestic industry in commercial quantities in a timely manner under the ATPDEA.

**SUMMARY:** On November 24, 2003, the Chairman of CITA received a petition from Encajes, S.A. alleging that certain viscose rayon filament yarns, of the specifications detailed below, classified in subheading 5403.41.0000 of the Harmonized Tariff Schedule of the United States (HTSUS), cannot be supplied by the domestic industry in commercial quantities in a timely manner. It requests that apparel articles containing such yarns assembled in one or more ATPDEA beneficiary countries be eligible for preferential treatment under the ATPDEA. CITA hereby solicits public comments on this petition, in particular with regard to whether these yarns can be supplied by the domestic industry in commercial quantities in a timely manner. Comments must be submitted by December 16, 2003 to the Chairman, Committee for the Implementation of Textile Agreements, Room 3001, United States Department of Commerce, 14th and Constitution, NW., Washington, DC 20230.

**FOR FURTHER INFORMATION CONTACT:** Janet E. Heinzen, International Trade Specialist, Office of Textiles and Apparel, U.S. Department of Commerce, (202) 482–3400.

**SUPPLEMENTARY INFORMATION:**

**Authority:** Section 204(b)(3)(B)(ii) of the ATPDEA, Presidential Proclamation 7616 of October 31, 2002, Executive Order 13277 of November 19, 2002, and the United States Trade Representative's Notice of Further Assignment of Functions of November 25, 2002.

*Background:* The ATPDEA provides for quota- and duty-free treatment for qualifying textile and apparel products. Such treatment is generally limited to products manufactured from yarns and fabrics formed in the United States or a beneficiary country. The ATPDEA also provides for quota- and duty-free treatment for apparel articles that are both cut (or knit-to-shape) and sewn or otherwise assembled in one or more ATPDEA beneficiary countries from fabric or yarn that is not formed in the United States, if it has been determined that such fabric or yarn cannot be supplied by the domestic industry in commercial quantities in a timely manner. Pursuant to Executive Order No. 13277 (67 FR 70305) and the United States Trade Representative's Notice of Redelegation of Authority and Further Assignment of Functions (67 FR 71606), the President's authority to determine whether yarns or fabrics cannot be supplied by the domestic industry in commercial quantities in a timely manner under the ATPDEA has been delegated to CITA.

On November 24, 2003, the Chairman of CITA received a petition from Encajes, S.A., of Bogota, Colombia, alleging that certain viscose rayon filament yarns, of the specifications detailed below, classified in HTSUS subheading 5403.41.0000, cannot be supplied by the domestic industry in commercial quantities in a timely manner and requesting quota- and duty-free treatment under the ATPDEA for apparel articles that are cut, or knit to shape, and sewn in one or more ATPDEA beneficiary countries containing such yarns.

1. Viscose Filament Yarn
DTEX 166/40 Bright Centrifugal
Tenacity, cN/tex, min.—142.0
Elongation at rupture, %—18.0—24.0
Elongation at rupture variation factory, % max.—8.1
Twist direction—S
2. Viscose Filament Yarn
DTEX 330/60 Bright Centrifugal
Tenacity, cN/tex, min.—142.0
Elongation at rupture, %—18.0—24.0
Elongation at rupture variation factor, % max.—8.1
Twist direction—S

CITA is soliciting public comments regarding this request, particularly with respect to whether these yarns can be supplied by the domestic industry in commercial quantities in a timely manner. Also relevant is whether other yarns that are supplied by the domestic industry in commercial quantities in a timely manner are substitutable for the yarn for purposes of the intended use. Comments must be received no later than December 16, 2003. Interested persons are invited to submit six copies of such comments or information to the Chairman, Committee for the Implementation of Textile Agreements, room 3100, U.S. Department of Commerce, 14th and Constitution Avenue, NW., Washington, DC 20230.

If a comment alleges that these yarns can be supplied by the domestic industry in commercial quantities in a timely manner, CITA will closely review any supporting documentation, such as a signed statement by a manufacturer of the yarns stating that it produces the yarns that is the subject of the request, including the quantities that can be supplied and the time necessary to fill an order, as well as any relevant information regarding past production.

CITA will protect any business confidential information that is marked business confidential from disclosure to the full extent permitted by law. CITA will make available to the public non-confidential versions of the request and non-confidential versions of any public comments received with respect to a request in room 3100 in the Herbert Hoover Building, 14th and Constitution Avenue, NW., Washington, DC 20230. Persons submitting comments on a request are encouraged to include a non-confidential version and a non-confidential summary.

**D. Michael Hutchinson,**
*Acting Chairman, Committee for the Implementation of Textile Agreements.*

[FR Doc. 03–29882 Filed 11–25–03; 4:24 pm]
BILLING CODE 3510–DR–P

## DEPARTMENT OF DEFENSE

### Department of Army, Corps of Engineers

### Notice of Availability; Final Environmental Impact Statement

**AGENCY:** U.S. Army Corps of Engineers, Department of Defense (DoD).

**ACTION:** Announcement of Final Environmental Impact Statement (FEIS) availability.

**SUMMARY:** The King Cove Health and Safety Act (Section 353) of the Omnibus Consolidated and Emergency Supplemental Appropriations Act of 1999 (Public Law 105–277) provided the Aleutians East Borough (AEB) with $20 million to construct a year-round marine-road transportation system between the Cities of King Cove and Cold Bay Alaska on the Alaska Peninsula. AEB proposes a 150-acre project consisting of a 17.2-mile access road, two hovercraft ramps and terminals located on the Northeast Corner of Cold Bay and Cross Wind Cove on the west side of Cold Bay, and a hovercraft. The Corps of Engineers, Alaska District has evaluated the AEB's permit application under the authority of Section 10 of the Rivers and Harbors Act and Section 404 of the Clean Air

Act. The EIS describes five alternatives that satisfy the purpose and needs for the proposed project. The alternatives are: (1) Northeast Corner Cold Bay—Hovercraft; (3) Lenard Harbor—Hovercraft; (4) Lenard Harbor—Ferry; (5) Lenard Harbor—Helicopter; and (6) the Isthmus Road alternative. Alternative 2 is the No Action Alternative. Alternative 6 was included in the Draft Environmental Impact Statement (DEIS) for comparison purposes only and cannot be selected for authorization by the decision-maker. Alternatives 1, 3, 4, and 5 would be constructed primarily on King Cove Corporation surface lands. Alternative 1 requires a USFWS compatibility determination on Native corporation owned lands within the Izembek National Wildlife Refuge, and no construction or operations would occur within the Congressionally designated Wilderness Area. Currently, Alternatives 3 and 4 are designated as the Environmentally Preferable Alternatives. The Corps of Engineers will use the EIS, public review process, and consideration of comments received, as a basis for the permit decision.

**FOR FURTHER INFORMATION CONTACT:** Mr. Leroy Phillips, Regulatory Branch, U.S. Army Corps of Engineers, P.O. Box 6898, Elmendorf, AFB 99506–6898; by telephone at (907) 753–2712; (800) 478–2712 (In Alaska); or by Fax at (907) 753–5567. Additional information including a complete copy of the Public Notice, Executive Summary, FEIS and Appendices are available on the project web site: *www.kingcoveaccesseis.com.*

**SUPPLEMENTARY INFORMATION:** The U.S. Army Corps of Engineers, Alaska District is the lead Federal agency with the U.S. Fish and Wildlife Service as a cooperating agency for this FEIS. During the Scoping process (February 16 to June 22, 2001) over 12,331 comments were received, with over 12,000 comments and opinions provided by e-mail. Many of these scoping comments expressed an objection to a road through the Izembek National Wildlife Refuge Wilderness Area. Twenty-eight alternatives were preliminary considered during the scoping and the alternative development phase of the EIS process. Six alternatives were selected for further evaluation. The proposed action (Alternative 1, Northeast Corner Cold Bay (NeCB) / Hovercraft) and two alternatives (Alternative 3, Lenard Harbor / Hovercraft; and Alternative 4, Lenard Harbor / Ferry) were selected for detailed evaluation that incorporates a marine-road link design in compliance with Section 353 cited above. The required ''no action'' alternative is presented as Alternative 2. The two remaining alternatives are not in compliance with section 353; hence the $20 million Federal appropriations would not be available for project construction. These are an air-road link alternative (Alternative 5, Lenard Harbor / Helicopter) and an all road alternative (Alternative 6, Isthmus Road). The all road alternative (Alternative 6) is not a practicable alternative for evaluation under the section 404(b)(1) Guidelines (40 CFR 230) for the Clean Water Act and cannot be authorized by the District Engineer. If an application is received by the USFWS under Title XI of ANCSA, a separate EIS would be required, with approval required by the Secretary of Interior, The President and Congress. No significant adverse impacts were identified for Alternatives 1, 3, 4 and 5. Significant beneficial impacts were noted for each action alternative centering on human and social resources with the ability to enhance safe, reliable and efficient emergency medical transport for King Cove residents and seasonal workers. For Alternatives 1, 3, 4 and 5 with the incorporation and implementation of mitigation measure, impacts to threatened and endangered or listed species (Steller's eider, Steller sea lion and Northern sea otter) were preliminarily determined not likely to adversely affect these species. For the same alternatives and incorporation of mitigation measures, determinations of would not likely impact Essential Fish Habitat, and Habitats of Particular Concern were concluded.

Notice of Availability of the DEIS and the Department of Army Corps of Engineers Public Notice were published on August 8, 2003. The comment period on these documents was open until September 23, 2003. There were 6,391 comments received during this period. Of these: three were Federal agencies, two State of Alaska agencies, six Native governments, 14 local governments, 19 non-governmental organizations, 38 people testified at the public hearings, 150 individual letters, and the rest of the comments were primarily form emails generated from two non-governmental organization promotions. Verbal testimony was received during the public hearings held in Cold Bay, Alaska on August 25, 2003, in King Cove Alaska on August 26, 2003, and in Anchorage, Alaska on September 10, 2003. After a review of the comments it was determined that the Commentors concerns were the same as those expressed during the above referenced scoping period. The District Engineer has determined that the issues identified by the commentors were properly addressed in the DEIS. Therefore, the FEIS would be in the form of the ''abbreviated'' document in accordance with procedures outlined in 40 CFR 1503.4(c).

*Comment Period:* Comments on the FEIS should be received by the Corps of Engineers, Alaska District (address above) by December 31, 2003 or 30-days from the publication date within the **Federal Register**, which ever is later.

**Kevin D. Morgan,**

*North Section Chief, Regulatory, Corps of Engineers Alaska District.*

[FR Doc. 03–29765 Filed 11–28–03; 8:45 am]

BILLING CODE 3710–NL–P

## DEPARTMENT OF DEFENSE

### Department of the Navy

### Meeting of the Chief of Naval Operations (CNO) Executive Panel

**AGENCY:** Department of the Navy, DoD.

**ACTION:** Notice of closed meeting.

**SUMMARY:** The CNO Executive Panel is to report the recommendations of the Expeditionary Strike Study Group to the Chief of Naval Operations. This meeting will consist of discussions relating to Expeditionary Strike capabilities as a context to broader U.S. national capabilities and strategic planning. This meeting will be closed to the public.

**DATES:** The meeting will be held on Friday, December 5, 2003, from 12 to 1 p.m.

**ADDRESSES:** The meeting will be held at the Chief of Naval Operations dining room, Room 4E641, 2000 Navy Pentagon, Washington, DC 20350–2000.

**FOR FURTHER INFORMATION CONTACT:** Commander Kevin Wilson, CNO Executive Panel, 4825 Mark Center Drive, Alexandria, VA 22311, (703) 681–4906 or Mr. Mark Miller, CNO Executive Panel, (703) 681–4924.

**SUPPLEMENTARY INFORMATION:** Pursuant to the provisions of the Federal Advisory Committee Act (5 U.S.C. App. 2), these matters constitute classified information that is specifically authorized by Executive Order to be kept secret in the interest of national defense and are, in fact, properly classified pursuant to such Executive Order.

Accordingly, the Secretary of the Navy has determined in writing that the public interest requires that all sessions of the meeting be closed to the public

because they will be concerned with matters listed in section 552b(c)(1) of title 5, United States Code.

Dated: November 24, 2003.

**J.T. Baltimore,**

*Lieutenant Commander, Judge Advocate General's Corps, U.S. Navy, Alternate Federal Register Liaison Officer.*

[FR Doc. 03–29907 Filed 11–28–03; 8:45 am]

**BILLING CODE 3810–FF–P**

## DEPARTMENT OF EDUCATION

## Office of Postsecondary Education; Overview Information; Fund for the Improvement of Postsecondary Education—Special Focus Competition: US-Brazil Higher Education Consortia Program; Notice Inviting Applications for New Awards for Fiscal Year (FY) 2004

*Catalog of Federal Domestic Assistance (CFDA) Number:* 84.116M.

**DATES:** *Applications Available:* November 28, 2003.

*Deadline for Transmittal of Applications:* April 16, 2004.

*Deadline for Intergovernmental Review:* June 16, 2004.

*Eligible Applicants:* Institutions of higher education or combinations of institutions and other public and private nonprofit institutions and agencies.

*Estimated Available Funds:* The Administration has requested $300,000 for new awards under this program for FY 2004. The actual level of funding, if any, depends on final congressional action. However, we are inviting applications to allow enough time to complete the grant process if Congress appropriates funds for this program.

*Estimated Range of Awards:* $25,000–$30,000 for FY 2004; $190,000–$210,000 for 4-year duration of grant.

*Estimated Average Size of Awards:* $200,000.

*Estimated Number of Awards:* 12.

**Note:** The Department is not bound by any estimates in this notice.

*Project Period:* Up to 48 months.

### Full Text of Announcement

*I. Funding Opportunity Description*

*Purpose of Program:* To provide grants or enter into cooperative agreements to improve postsecondary education opportunities by focusing on problem areas or improvement approaches in postsecondary education. This program is a Special Focus Competition under the Fund for the Improvement of Postsecondary Education (Title VII, Part B of the Higher Education Act of 1965, as amended) to support projects addressing a particular problem area or improvement approach in postsecondary education.

*Priority:* Under this competition, we are particularly interested in applications that address the following priority.

*Invitational Priority:* For FY 2004 this priority is an invitational priority. Under 34 CFR 75.105 (c) we do not give an application that meets this invitational priority a competitive or absolute preference over other applications.

This priority encourages proposals designed to support the formation of educational consortia of American and Brazilian institutions to encourage cooperation in the coordination of curricula, the exchange of students, and the opening of educational opportunities between the United States and Brazil. The invitational priority is issued in cooperation with Brazil. These awards support only the participation of U.S. institutions and students in these consortia. Brazilian institutions participating in any consortium proposal responding to the invitational priority may apply, respectively, to the Coordination of Improvement of Personnel of Superior Level (CAPES), Brazilian Ministry of Education, for additional funding under a separate but parallel Brazilian competition.

*Program Authority:* 20 U.S.C. 1138–1138d.

*Applicable Regulations:* The Education Department General Administrative Regulations (EDGAR) in 34 CFR parts 74, 75, 77, 79, 80, 82, 85, 86, 97, 98, and 99.

**Note:** The regulations in 34 CFR part 86 apply to institutions of higher education only.

*II. Award Information*

*Type of Award:* Discretionary awards.

*Estimated Available Funds:* The Administration has requested $300,000 for this program for FY 2004. The actual level of funding, if any, depends on final congressional action. However, we are inviting applications to allow enough time to complete the grant process if Congress appropriates funds for this program.

*Estimated Range of Awards:* $25,000–$30,000 for FY 2004; $190,000–$210,000 for 4-year duration of grant.

*Estimated Average Size of Awards:* $200,000.

*Estimated Number of Awards:* 12.

**Note:** The Department is not bound by any estimates in this notice.

*Project Period:* Up to 48 months.

*III. Eligibility Information*

1. *Eligible Applicants:* Institutions of higher education or combinations of institutions and other public and private nonprofit institutions and agencies.

2. *Cost Sharing or Matching:* This program does not involve cost sharing or matching.

*IV. Application and Submission Information*

1. *Address to Request Application Package:* Beverly Baker, Fund for the Improvement of Postsecondary Education, U.S. Department of Education, 1990 K Street, NW., suite 6140, Washington, DC 20006–8544. Telephone: (202) 502–7503 or by e-mail: *Beverly.Baker@ed.gov* or Education Publications Center (ED Pubs), P.O. Box 1398, Jessup, MD 20794–1398. Telephone (toll free): 1–877–433–7827. FAX: (301) 470–1244. If you use a telecommunications device for the deaf (TDD), you may call (toll free): 1–877–576–7734.

You may also contact ED Pubs at its Web site: *http://www.ed.gov/pubs/edpubs.html* or you may contact ED Pubs at its e-mail address: *edpubs@inet.ed.gov.*

If you request an application from ED Pubs, be sure to identify this competition as follows: CFDA number 84.116M.

If you use a telecommunications device for the deaf (TDD), you may call the Federal Information Relay Service (FIRS) at 1–800–877–8339.

Individuals with disabilities may obtain a copy of the application package in an alternative format (*e.g.*, Braille, large print, audiotape, or computer diskette) by contacting the program contact person listed in this section. However, the Department is not able to reproduce in an alternative format the standard forms included in the application package.

2. *Content and Form of Application Submission:* Requirements concerning the content of an application, together with the forms you must submit, are in the application package for this program.

Page Limit: 10 single spaced or 20 double spaced 8.5″ x 11″ sized pages (font size 12), with 1 inch margins on the top, bottom and the sides. The page limit does not apply to the cover sheet, the abstract, the budget section and budget narrative, the assurances and certifications; the short resumes, or letters of support.

Our reviewers will not read any pages of your application that—

- Exceed the page limit if you apply these standards; or

• Exceed the equivalent of the page limit if you apply other standards.

3. *Submission Dates and Times:* Applications Available: November 28, 2003. Deadline for Transmittal of Applications: April 16, 2004. The dates and times for the transmittal of applications by mail or by hand (including a courier service or commercial carrier) are in the application package for this program. The application package also specifies the hours of operation of the e-Application Web site.

We do not consider an application that does not comply with the deadline requirements.

Deadline for Intergovernmental Review: June 16, 2004.

4. *Intergovernmental Review:* This program is subject to Executive Order 12372 and the regulations in 34 CFR part 79. Information about Intergovernmental Review of Federal Programs under Executive Order 12372 is in the application package for this program.

5. *Funding Restrictions:* We reference regulations outlining funding restrictions in the *Applicable Regulations* section of this notice.

6. *Other Submission Requirements:* Instructions and requirements for the transmittal of applications by mail or by hand (including a courier service or commercial carrier) are in the application package for this program.

Application Procedures:

**Note:** Some of the procedures in these instructions for transmitting applications differ from those in the Education Department General Administrative Regulations (EDGAR) (34 CFR 75.102). Under the Administrative Procedure Act (5 U.S.C. 553) the Department generally offers interested parties the opportunity to comment on proposed regulations. However, these amendments make procedural changes only and do not establish new substantive policy. Therefore, under 5 U.S.C. 553(b)(A), the Secretary has determined that proposed rulemaking is not required.

*Pilot Project for Electronic Submission of Applications:* We are continuing to expand our pilot project for electronic submission of applications to include additional formula grant programs and additional discretionary grant competitions. The US-Brazil Higher Education Consortia Program—CFDA Number 84.116M is one of the programs included in the pilot project. If you are an applicant under US-Brazil Higher Education Consortia Program, you may submit your application to us in either electronic or paper format.

The pilot project involves the use of the Electronic Grant Application System (e-Application). If you use e-Application, you will be entering data online while completing your application. You may not e-mail an electronic copy of a grant application to us. If you participate in this voluntary pilot project by submitting an application electronically, the data you enter online will be saved into a database. We request your participation in e-Application. We shall continue to evaluate its success and solicit suggestions for its improvement.

If you participate in e-Application, please note the following:

• Your participation is voluntary.

• When you enter the e-Application system, you will find information about its hours of operation. We strongly recommend that you do not wait until the application deadline date to initiate an e-Application package.

• You will not receive additional point value because you submit a grant application in electronic format, nor will we penalize you if you submit an application in paper format.

• You may submit all documents electronically, including the US-Brazil Higher Education Program cover page, US-Brazil Program Budget Information and all necessary assurances and certifications.

• Your e-Application must comply with any page limit requirements described in this notice.

• After you electronically submit your application, you will receive an automatic acknowledgement, which will include a PR/Award number (an identifying number unique to your application).

• Within three working days after submitting your electronic application, fax a signed copy of the US-Brazil Program cover page to the Application Control Center after following these steps:

1. Print the US-Brazil Higher Education cover page from e-Application.

2. The institution's Authorizing Representative must sign the US-Brazil Program cover page.

3. Place the PR/Award number in the upper right hand corner of the hard copy signature page of the US-Brazil Program cover page.

4. Fax the signed US-Brazil Program cover page to the Application Control Center at (202) 260–1349.

• We may request that you give us original signatures on other forms at a later date.

Application Deadline Date Extension in Case of System Unavailability: If you elect to participate in the e-Application pilot for the US-Brazil Higher Education Consortia Program and you are prevented from submitting your application on the application deadline date because the e-Application system is unavailable, we will grant you an extension of one business day in order to transmit your application electronically, by mail, or by hand delivery. We will grant this extension if—

1. You are a registered user of e-Application, and you have initiated an e-Application for this competition; and

2.(a) The e-Application system is unavailable for 60 minutes or more between the hours of 8:30 a.m. and 3:30 p.m., Washington, DC time, on the application deadline date; or

(b) The e-Application system is unavailable for any period of time during the last hour of operation (that is, for any period of time between 3:30 p.m. and 4:30 p.m., Washington, DC time) on the application deadline date.

We must acknowledge and confirm these periods of unavailability before granting you an extension. To request this extension or to confirm our acknowledgement of any system unavailability, you may contact either (1) the person listed elsewhere in this notice under For Further Information Contact (see VII. Agency Contact) or (2) the e-GRANTS help desk at 1–888–336–8930.

You may access the electronic grant application for the US-Brazil Higher Education Consortia Program at: *http://e-grants.ed.gov.*

*V. Application Review Information*

1. *Selection Criteria:* The selection criteria for this program are in 34 CFR 75.210 as follows:

(1) *Significance.* The Secretary considers the significance of the proposed project. In determining the significance of the proposed project, the Secretary considers—

(a) The extent to which the proposed project involves the development or demonstration of promising new strategies that build on, or are alternatives to, existing strategies;

(b) The likely utility of the products (such as information, materials, processes, or techniques) that will result from the proposed project, including the potential for their being used effectively in a variety of other settings; and

(c) The importance or magnitude of the results or outcomes likely to be attained by the proposed project, especially improvements in teaching and student achievement.

(2) *Quality of the Project Design.* The Secretary considers the quality of the design of the proposed project. In determining the quality of the design of the proposed project, the Secretary considers—

(a) The extent to which the goals, objectives, and outcomes to be achieved by the proposed project are clearly specified and measurable; and

(b) The extent to which the design of the proposed project is appropriate to, and will successfully address, the needs of the target population or other identified needs.

(3) *Adequacy of Resources.* The Secretary considers the adequacy of resources for the proposed project. In determining the adequacy of resources, the Secretary considers—

(a) The extent to which the costs are reasonable in relation to the objectives, design, and potential significance of the proposed project;

(b) The potential for continued support of the project after Federal funding ends, including, as appropriate, the demonstrated commitment of appropriate entities to such support; and

(c) The relevance and demonstrated commitment of each partner in the proposed project to the implementation and success of the project.

(4) *Quality of Project Personnel.* The Secretary considers the quality of the project personnel. In determining the quality of project personnel, The Secretary considers—

(a) The extent to which the applicant encourages applications for employment from persons who are members of groups that have traditionally been underrepresented based on race, color, national origin, gender, age, or disability; and

(b) The qualifications, including relevant training and experience, of key project personnel.

2. *Review and Selection Process:* The Secretary gives equal weight to each of the listed criteria. Within each of the criteria, the Secretary gives equal weight to each of the factors.

*VI. Award Administration Information*

1. *Award Notices:* If your application is successful, we notify your U.S. Representative and U.S. Senators and send you a Grant Award Notice (GAN). We may also notify you informally.

If your application is not evaluated or not selected for funding, we notify you.

2. *Administrative and National Policy Requirements:* We identify administrative and national policy requirements in the application package and reference these and other requirements in the *Applicable Regulations* section of this notice.

We reference the regulations outlining the terms and conditions of an award in the *Applicable Regulations* section of this notice and include these and other specific conditions in the GAN. The GAN also incorporates your approved application as part of your binding commitments under the grant.

3. *Reporting:* At the end of your project period, you must submit a final performance report, including financial information, as directed by the Secretary. If you receive a multi-year award, you must submit an annual performance report that provides the most current performance and financial expenditure information as specified by the Secretary in 34 CFR 75.118.

4. *Performance Measures:* Under the Government Performance and Results Act (GPRA), FIPSE performance is focused on (1) the extent to which funded projects are being replicated—*i.e.*, adopted or adapted—by others; and (2) the manner in which projects are being institutionalized and continued after grant funding. These two results constitute FIPSE's indicators of the success of our program. Consequently, applicants for FIPSE grants are advised to give careful consideration to these two outcomes in conceptualizing the design, implementation, and evaluation of the proposed project. If funded, you will be asked to collect and report data in your project's annual performance report on steps taken toward these goals.

*VII. Agency Contact*

**FOR FURTHER INFORMATION CONTACT:** Beverly Baker, Fund for the Improvement of Postsecondary Education, U.S. Department of Education, 1990 K Street, NW., suite 6140, Washington, DC 20006–8544. Telephone: (202) 502–7503 or by e-mail: *Beverly.Baker@ed.gov.* If you use a telecommunications device for the deaf (TDD), you may call the Federal Information Relay Service (FIRS) at 1–800–877–8339.

Individuals with disabilities may obtain this document in an alternative format (*e.g.*, Braille, large print, audiotape, or computer diskette) on request to the program contact person listed in this section.

*VIII. Other Information*

*Electronic Access to This Document:* You may view this document, as well as all other documents of this Department published in the **Federal Register**, in text or Adobe Portable Document Format (PDF) on the Internet at the following site: *http://www.ed.gov/news/fedregister.*

To use PDF you must have Adobe Acrobat Reader, which is available free at this site. If you have questions about using PDF, call the U.S. Government Printing Office (GPO), toll free, at 1–888–293–6498; or in the Washington, DC, area at (202) 512–1530.

**Note:** The official version of this document is the document published in the **Federal Register**. Free Internet access to the official edition of the **Federal Register** and the Code of Federal Regulations is available on GPO Access at: *http://www.gpoaccess.gov/nara/index.html.*

Dated: November 24, 2003.

**Sally L. Stroup,**

*Assistant Secretary, Office of Postsecondary Education.*

[FR Doc. 03–29753 Filed 11–28–03; 8:45 am]

BILLING CODE 4000–01–P

## DEPARTMENT OF ENERGY

## Federal Energy Regulatory Commission

**[Docket No. RP04–41– 001]**

## Canyon Creek Compression Company; Notice of Tariff Filing

November 21, 2003.

Take notice that on November 14, 2003, Canyon Creek Compression Company (Canyon) tendered for filing to become part of its FERC Gas Tariff, Third Revised Volume No. 1, Substitute Tenth Revised Sheet No. 6 and Substitute First Revised Sheet No. 6A, to be effective December 1, 2003.

Canyon states that the purpose of this filing is to correct a computational error in the allocation of estimated costs between the firm reservation and usage rates made in its filing of October 31, 2003, in Docket No. RP04–41–000. Canyon notes that the error affects Substitute Tenth Revised Sheet No. 6 and Substitute First Revised Sheet No. 6A as well as Attachment A, pages 1 and 2.

Canyon states that copies of the filing are being mailed to its customers and state regulatory agencies.

Any person desiring to protest said filing should file a protest with the Federal Energy Regulatory Commission, 888 First Street, NE., Washington, DC 20426, in accordance with § 385.211 of the Commission's Rules and Regulations. All such protests must be filed in accordance with § 154.210 of the Commission's Regulations. Protests will be considered by the Commission in determining the appropriate action to be taken, but will not serve to make protestants parties to the proceedings. This filing is available for review at the Commission in the Public Reference Room or may be viewed on the Commission's Web site at *http://www.ferc.gov* using the eLibrary link. Enter the docket number excluding the last three digits in the docket number field to access the document. For

assistance, please contact FERC Online Support at *FERCOnlineSupport@ferc.gov* or toll-free at (866) 208–3676, or TTY, contact (202) 502–8659. The Commission strongly encourages electronic filings. *See,* 18 CFR 385.2001(a)(1)(iii) and the instructions on the Commission's Web site under the e-Filing link.

**Magalie R. Salas,**

*Secretary.*

[FR Doc. E3–00397 Filed 11–28–03; 8:45 am]

BILLING CODE 6717–01–P

## DEPARTMENT OF ENERGY

### Federal Energy Regulatory Commission

**[Docket No. RP04–59–000]**

### Chandeleur Pipe Line Company; Notice of Tariff Filing

November 21, 2003.

Take notice that on November 19, 2003, Chandeleur Pipe Line Company (Chandeleur) tendered for filing in accordance with Section 21.0 of the General Terms and Conditions of its FERC Gas Tariff, Second Revised Volume No. 1, workpapers supporting the adjustment, effective January 1, 2004 of its currently effective Fuel and Line Loss Allowance to 0.2%.

Chandeleur asserts that this filing is to comply with the annual calculation requirements of its tariff as referenced above. Chandeleur states that the purpose of this filing is to account for changes in amounts retained for Fuel and Line Loss Allowance pursuant to the provisions of 18 CFR 154.403(d)(3) and in accordance with Section 21.0 of the General Terms and Conditions of Chandeleur Pipe Line Company's (Chandeleur) FERC Gas Tariff, Second Revised Volume No. 1.

Any person desiring to be heard or to protest said filing should file a motion to intervene or a protest with the Federal Energy Regulatory Commission, 888 First Street, NE., Washington, DC 20426, in accordance with § 385.214 or 385.211 of the Commission's Rules and Regulations. All such motions or protests must be filed in accordance with § 154.210 of the Commission's Regulations. Protests will be considered by the Commission in determining the appropriate action to be taken, but will not serve to make protestants parties to the proceedings. Any person wishing to become a party must file a motion to intervene. This filing is available for review at the Commission in the Public Reference Room or may be viewed on the Commission's website at *http://www.ferc.gov* using the ''eLibrary''. Enter the docket number excluding the last three digits in the docket number field to access the document. For assistance, please contact FERC Online Support at *FERCOnlineSupport@ferc.gov* or toll-free at (866) 208–3676, or TTY, contact (202) 502–8659. The Commission strongly encourages electronic filings. *See*, 18 CFR 385.2001(a)(1)(iii) and the instructions on the Commission's Web site under the ''e-Filing'' link.

**Magalie R. Salas,**

*Secretary.*

[FR Doc. E3–00398 Filed 11–28–03; 8:45 am]

BILLING CODE 6717–01–P

## DEPARTMENT OF ENERGY

### Federal Energy Regulatory Commission

**[Docket No. RP04–60–000]**

### Handeleur Pipe Line Company; Notice of Tariff Filing

November 21, 2003.

Take notice that on November 19, 2003, Chandeleur Pipe Line Company (Chandeleur) tendered for filing, as part of its FERC GasTariff, Second Revised Volume No. 1, First Revised Sheet No. 58A, with a proposed effective date of December 1, 2003.

Chandeleur asserts that the purpose of this filing is to update Chandeleur's tariff with respect to changes of its affiliated marketing entity.

Any person desiring to be heard or to protest said filing should file a motion to intervene or a protest with the Federal Energy Regulatory Commission, 888 First Street, NE., Washington, DC 20426, in accordance with § 385.214 or 385.211 of the Commission's Rules and Regulations. All such motions or protests must be filed in accordance with § 154.210 of the Commission's Regulations. Protests will be considered by the Commission in determining the appropriate action to be taken, but will not serve to make protestants parties to the proceedings. Any person wishing to become a party must file a motion to intervene. This filing is available for review at the Commission in the Public Reference Room or may be viewed on the Commission's Web site at *http://www.ferc.gov* using the ''eLibrary''. Enter the docket number excluding the last three digits in the docket number field to access the document. For assistance, please contact FERC Online Support at *FERCOnlineSupport@ferc.gov* or toll-free at (866) 208–3676, or TTY, contact (202) 502–8659. The Commission strongly encourages electronic filings. *See*, 18 CFR 385.2001(a)(1)(iii) and the instructions on the Commission's Web site under the ''e-Filing'' link.

**Magalie R. Salas,**

*Secretary.*

[FR Doc. E3–00399 Filed 11–28–03; 8:45 am]

BILLING CODE 6717–01–P

## DEPARTMENT OF ENERGY

### Federal Energy Regulatory Commission

**[Docket Nos. RP00–327–006 and RP00–604–006]**

### Columbia Gas Transmission Corporation; Notice of Compliance Filing

November 20, 2003.

Take notice that on November 17, 2003, Columbia Gas Transmission Corporation (Columbia) tendered for filing as part its FERC Gas Tariff, Second Revised Volume No. 1, the following tariff sheets, bearing an effective date of September 1, 2003:

Fifth Revised Sheet No. 306
Fourth Revised Sheet No. 307
Fifth Revised Sheet no. 307A
Sixth Revised Sheet No. 309
Seventh Revised Sheet No. 310
Third Revised Sheet No. 311
Second Revised Sheet No. 313
Third Revised Sheet No. 382
Fifth Revised Sheet No. 391

Columbia states it is making this filing in compliance with the Commission's October 27, 2003 Order (October 27 Order) in the above-referenced dockets. In the October 27 Order, the Commission held that Columbia's August 14, 2003 filing to comply with the Commission's July 30, 2003 order on Columbia's compliance with Order Nos. 637, 587–G, and 587–L generally complied with the requirements of those Orders. Columbia states that the Commission required it make certain compliance changes by filing tariff sheets within 20 days of the date of issuance of the October 27 Order. Columbia further states that these revised tariff sheets reflect the changes required by the Commission in the October 27 Order.

Columbia states that copies of its filing have been mailed to all firm customers, interruptible customers and affected state commissions.

Any person desiring to protest said filing should file a protest with the Federal Energy Regulatory Commission, 888 First Street, NE., Washington, DC 20426, in accordance with § 385.211 of

the Commission's Rules and Regulations. All such protests must be filed in accordance with § 154.210 of the Commission's Regulations. Protests will be considered by the Commission in determining the appropriate action to be taken, but will not serve to make protestants parties to the proceedings. This filing is available for review at the Commission in the Public Reference Room or may be viewed on the Commission's Web site at *http://www.ferc.gov* using the eLibrary link. Enter the docket number excluding the last three digits in the docket number field to access the document. For assistance, please contact FERC Online Support at *FERCOnlineSupport@ferc.gov* or toll-free at (866) 208–3676, or TTY, contact (202) 502–8659. The Commission strongly encourages electronic filings. *See*, 18 CFR 385.2001(a)(1)(iii) and the instructions on the Commission's Web site under the e-Filing link.

**Magalie R. Salas,**

*Secretary.*

[FR Doc. E3–00408 Filed 11–28–03; 8:45 am]

BILLING CODE 6717–01–P

## DEPARTMENT OF ENERGY

### Federal Energy Regulatory Commission

**[Docket No. RP04–61–000]**

### El Paso Natural Gas Company; Notice of Proposed Changes in FERC Gas Tariff

November 21, 2003.

Take notice that on November 18, 2003, El Paso Natural Gas Company (El Paso) tendered for filing as part of its FERC Gas Tariff, Second Revised Volume No. 1–A, the following tariff sheets, to become effective February 1, 2004:

First Revised Sheet No. 214A
Eighth Revised Sheet No. 215
Original Sheet No. 219G
Original Sheet No. 219H
Original Sheet No. 219H

El Paso states that the tariff sheets propose a directional transfer scheduling process for Rate Schedule FT–1 shippers.

Any person desiring to be heard or to protest said filing should file a motion to intervene or a protest with the Federal Energy Regulatory Commission, 888 First Street, NE., Washington, DC 20426, in accordance with § 385.214 or 385.211 of the Commission's Rules and Regulations. All such motions or protests must be filed in accordance with § 154.210 of the Commission's Regulations. Protests will be considered by the Commission in determining the appropriate action to be taken, but will not serve to make protestants parties to the proceedings. Any person wishing to become a party must file a motion to intervene. This filing is available for review at the Commission in the Public Reference Room or may be viewed on the Commission's Web site at *http://www.ferc.gov* using the ''eLibrary''. Enter the docket number excluding the last three digits in the docket number field to access the document. For assistance, please contact FERC Online Support at *FERCOnlineSupport@ferc.gov* or toll-free at (866) 208–3676, or TTY, contact (202) 502–8659. The Commission strongly encourages electronic filings. *See*, 18 CFR 385.2001(a)(1)(iii) and the instructions on the Commission's Web site under the ''e-Filing'' link.

**Magalie R. Salas,**

*Secretary.*

[FR Doc. E3–00400 Filed 11–28–03; 8:45 am]

BILLING CODE 6717–01–P

## DEPARTMENT OF ENERGY

### Federal Energy Regulatory Commission

**[Docket No. PR04–3–000]**

### Enbridge Pipelines L.L.C.; Notice of Petition for a Rate Approval

November 20, 2003.

Take notice that on November 12, 2003, Enbridge Pipelines (Alabama Intrastate) L.L.C. (formerly Magnolia Pipeline Corporation), filed a petition for rate approval pursuant to section 311 of the Natural Gas Policy Act (NGPA) and § 284.123(b)(2) of the Commission's Regulations requesting that the Commission approve Alabama Intrastate's continued use of its current maximum rate of $0.1621 per Dth, plus reimbursement of actual fuel use up to three percent, for Section 311 interruptible transportation services.

Alabama Intrastate states that even if it were able to collect its current maximum rates, it would not recover its total cost of service because its throughput is significantly lower than that used in the design of its current rate. Further, Alabama Intrastate states that current market conditions do not allow it to collect its current maximum rate, therefore, it is seeking only to re-justify such rate. Alabama Intrastate proposes an effective date of November 13, 2003, while reserving the right to increase such rate in the future.

Any person desiring to participate in this rate proceeding must file a motion to intervene or protest with the Federal Energy Regulatory Commission, 888 First Street, NE., Washington DC 20426, in accordance with § 385.214 or 385.211 of the Commission's Rules and Regulations. All such motions or protests must be filed with the Secretary of the Commission on or before the date as indicated below. Protests will be considered by the Commission in determining the appropriate action to be taken, but will not serve to make protestants parties to the proceedings. Any person wishing to become a party must file a motion to intervene. This petition for rate approval is available for review at the Commission in the Public Reference Room or may be viewed on the Commission's Web site at *http://www.ferc.gov* using the ''eLibrary'' link. Enter the docket number excluding the last three digits into the docket number field to access the document. For assistance, call (202) 502–8222 or for TTY, (202) 502–8659. Comments, protests and interventions may be filed electronically via the Internet in lieu of paper. The Commission strongly encourages electronic filings. *See*, 18 CFR 385.200(a)(1)(iii) and the instructions on the Commission's Web site under the ''eFiling'' link.

*Comment Date*: December 5, 2003.

**Magalie R. Salas,**

*Secretary.*

[FR Doc. E3–00407 Filed 11–28–03; 8:45 am]

BILLING CODE 6717–01–P

## DEPARTMENT OF ENERGY

### Federal Energy Regulatory Commission

**[Docket No. PR03–3–002]**

### Enogex Inc.; Notice of Refund Report

November 20, 2003.

Take notice that on November 12, 2003, Enogex Inc. tendered for filing: (1) A final report showing, according to Enogex, Inc., the calculations that true-up, for the final time, the fuel tracker that was in effect until June 30, 2003 for the Palo Duro Pipeline System; and (2) a refund report showing the refunds made to affected customers in connection with such final true-up.

Any person desiring to protest said filing should file a protest with the Federal Energy Regulatory Commission, 888 First Street, NE., Washington, DC 20426, in accordance with § 385.211 of the Commission's Rules and Regulations. All such protests must be filed on or before the protest date as

shown below. Protests will be considered by the Commission in determining the appropriate action to be taken, but will not serve to make protestants parties to the proceedings. This filing is available for review at the Commission in the Public Reference Room or may be viewed on the Commission's Web site at *http://www.ferc.gov* using the ''eLibrary'' link. Enter the docket number excluding the last three digits in the docket number field to access the document. Comments, protests and interventions may be filed electronically via the Internet in lieu of paper. For assistance, please contact FERC Online Support at *FERCOnlineSupport@ferc.gov* or toll-free at (866) 208–3676, or TTY, contact (202) 502–8659. The Commission strongly encourages electronic filings. *See*, 18 CFR 385.2001(a)(1)(iii) and the instructions on the Commission's Web site under the e-Filing link.

*Protest Date*: November 28, 2003.

**Magalie R. Salas,**

*Secretary.*

[FR Doc. E3–00406 Filed 11–28–03; 8:45 am]

BILLING CODE 6717–01–P

## DEPARTMENT OF ENERGY

### Federal Energy Regulatory Commission

**[Docket No. RP02–361–016]**

### Gulfstream Natural Gas System, L.L.C.; Notice of Compliance Filing

November 20, 2003.

Take notice that on November 17, 2003, Gulfstream Natural Gas System, L.L.C. (Gulfstream) tendered for filing as part of its FERC Gas Tariff, Original Volume No. 1, Sub Original Sheet Nos. 8L and 8M, to be effective October 1, 2003.

Gulfstream states that it is filing these tariff sheets and related agreements to comply with the Commission's October 31, 2003 Order in the captioned docket regarding a negotiated rate transaction under Rate Schedule ITS.

Gulfstream states that copies of its filing have been mailed to all parties on the Commission's Official Service List in this proceeding.

Any person desiring to protest said filing should file a protest with the Federal Energy Regulatory Commission, 888 First Street, NE., Washington, DC 20426, in accordance with § 385.211 of the Commission's Rules and Regulations. All such protests must be filed in accordance with § 154.210 of the Commission's Regulations. Protests will be considered by the Commission in determining the appropriate action to be taken, but will not serve to make protestants parties to the proceedings. This filing is available for review at the Commission in the Public Reference Room or may be viewed on the Commission's Web site at *http://www.ferc.gov* using the eLibrary link. Enter the docket number excluding the last three digits in the docket number field to access the document. For assistance, please contact FERC Online Support at *FERCOnlineSupport@ferc.gov* or toll-free at (866) 208–3676, or TTY, contact (202) 502–8659. The Commission strongly encourages electronic filings. *See*, 18 CFR 385.2001(a)(1)(iii) and the instructions on the Commission's Web site under the e-Filing link.

**Magalie R. Salas,**

*Secretary.*

[FR Doc. E3–00411 Filed 11–28–03; 8:45 am]

BILLING CODE 6717–01–P

## DEPARTMENT OF ENERGY

### Federal Energy Regulatory Commission

**[Docket No. RP99–176–095]**

### Natural Gas Pipeline Company of America; Notice of Negotiated Rates

November 21, 2003.

Take notice that on November 17, 2003, Natural Gas Pipeline Company of America (Natural) tendered for filing to become part of its FERC Gas Tariff, Sixth Revised Volume No. 1, Fourth Revised Sheet No. 26P.01, to be effective June 1, 2002.

Natural states that the purpose of this filing is to reflect an amendment, which also was tendered for filing, to an existing negotiated rate agreement between Natural and Dynegy Marketing and Trade under Natural's Rate Schedule FTS, pursuant to Section 49 of the General Terms and Conditions (GT&C) of Natural's Tariff.

Natural states that copies of the filing are being mailed to all parties set out on the Commission's official service list in Docket No. RP99–176.

Any person desiring to be heard or to protest said filing should file a motion to intervene or a protest with the Federal Energy Regulatory Commission, 888 First Street, NE., Washington, DC 20426, in accordance with § 385.214 or 385.211 of the Commission's Rules and Regulations. All such motions or protests must be filed in accordance with § 154.210 of the Commission's Regulations. Protests will be considered by the Commission in determining the appropriate action to be taken, but will not serve to make protestants parties to the proceedings. Any person wishing to become a party must file a motion to intervene. This filing is available for review at the Commission in the Public Reference Room or may be viewed on the Commission's Web site at *http://www.ferc.gov* using the ''eLibrary''. Enter the docket number excluding the last three digits in the docket number field to access the document. For assistance, please contact FERC Online Support at *FERCOnlineSupport@ferc.gov* or toll-free at (866) 208–3676, or TTY, contact (202) 502–8659. The Commission strongly encourages electronic filings. *See,* 18 CFR 385.2001(a)(1)(iii) and the instructions on the Commission's web site under the ''e-Filing'' link.

**Magalie R. Salas,**

*Secretary.*

[FR Doc. E3–00396 Filed 11–28–03; 8:45 am]

BILLING CODE 6717–01–P

## DEPARTMENT OF ENERGY

### Federal Energy Regulatory Commission

**[Docket No. ES03–59–002]**

### NRG Energy, Inc.; Notice of Application

November 20, 2003.

Take notice that on November 18, 2003, NRG Energy, Inc. amended its filing seeking to increase the amount of its refinancing package, from the $2.215 billion to $2.715 billion, previously approved in a delegated letter order issued on October 22, 2004.

Any person desiring to intervene or to protest this filing should file with the Federal Energy Regulatory Commission, 888 First Street, NE., Washington, DC 20426, in accordance with Rules 211 and 214 of the Commission's Rules of Practice and Procedure (18 CFR 385.211 and 385.214). Protests will be considered by the Commission in determining the appropriate action to be taken, but will not serve to make protestants parties to the proceeding. Any person wishing to become a party must file a motion to intervene. All such motions or protests should be filed on or before the comment date, and, to the extent applicable, must be served on the applicant and on any other person designated on the official service list. This filing is available for review at the Commission or may be viewed on the Commission's Web site at *http://www.ferc.gov*, using the eLibrary (FERRIS) link. Enter the docket number

excluding the last three digits in the docket number field to access the document. For assistance, please contact FERC Online Support at *FERCOnlineSupport@ferc.gov* or toll-free at (866) 208–3676, or for TTY, contact (202) 502–8659. Protests and interventions may be filed electronically via the Internet in lieu of paper; *see* 18 CFR 385.2001(a)(1)(iii) and the instructions on the Commission's Web site under the ''e-Filing'' link. The Commission strongly encourages electronic filings.

*Comment Date*: December 4, 2004.

**Magalie R. Salas,**

*Secretary.*

[FR Doc. E3–00404 Filed 11–28–03; 8:45 am]

BILLING CODE 6717–01–P

## DEPARTMENT OF ENERGY

### Federal Energy Regulatory Commission

**[Docket Nos.RP00–398–005 and RP01–34–007]**

### Overthrust Pipeline Company; Notice of Compliance Filing

November 20, 2003.

Take notice that on November 17, 2003, Overthrust Pipeline Company's (Overthrust) tendered for filing as part of its FERC Gas Tariff, First Revised Volume No. 1, Second Revised Sheet no. 78K to be effective December 1, 2003.

Overthrust states that this filing proposes to amend Overthrust's October 31, 2003, tariff filing that was filed in compliance with the Commission's Order on Rehearing and Compliance Filing issued March 4, in Docket Nos. RP00–398–001, RP00–398–002, RP01–34003 and RP01–34–004. Overthrust states that it was discovered that the pagination for First Revised Sheet No. 78K was incorrect and the correct pagination should be Second Revised Sheet No. 78K.

Overthrust states that a copy of this filing has been served upon its customers and the Public Service Commission of Utah and the Public Service Commission of Wyoming.

Any person desiring to protest said filing should file a protest with the Federal Energy Regulatory Commission, 888 First Street, NE., Washington, DC 20426, in accordance with § 385.211 of the Commission's Rules and Regulations. All such protests must be filed in accordance with § 154.210 of the Commission's Regulations. Protests will be considered by the Commission in determining the appropriate action to be taken, but will not serve to make protestants parties to the proceedings. This filing is available for review at the Commission in the Public Reference Room or may be viewed on the Commission's Web site at *http://www.ferc.gov* using the eLibrary link. Enter the docket number excluding the last three digits in the docket number field to access the document. For assistance, please contact FERC Online Support at *FERCOnlineSupport@ferc.gov* or toll-free at (866) 208–3676, or TTY, contact (202) 502–8659. The Commission strongly encourages electronic filings. See, 18 CFR 385.2001(a)(1)(iii) and the instructions on the Commission's web site under the e-Filing link.

**Magalie R. Salas,**

*Secretary.*

[FR Doc. E3–00409 Filed 11–28–03; 8:45 am]

BILLING CODE 6717–01–P

## DEPARTMENT OF ENERGY

### Federal Energy Regulatory Commission

**[Docket No. RP04–3–001]**

### Tennessee Gas Pipeline Company; Notice of Compliance Filing

November 20, 2003.

Take notice that on November 17, 2003, Tennessee Gas Pipeline Company, (Tennessee) tendered for filing as part of its FERC Gas Tariff, Fifth Revised Volume No. 1, Substitute First Revised Sheet No. 405E, to be effective November 1, 2003.

Tennessee states that the tariff sheet is being filed in compliance with the Commission's order issued October 31, 2003, in the referenced proceeding.

Any person desiring to protest said filing should file a protest with the Federal Energy Regulatory Commission, 888 First Street, NE, Washington, DC. 20426, in accordance with section 385.211 of the Commission's Rules and Regulations. All such protests must be filed in accordance with section 154.210 of the Commission's Regulations. Protests will be considered by the Commission in determining the appropriate action to be taken, but will not serve to make protestants parties to the proceedings. This filing is available for review at the Commission in the Public Reference Room or may be viewed on the Commission's Web site at *http://www.ferc.gov* using the eLibrary link. Enter the docket number excluding the last three digits in the docket number field to access the document. For assistance, please contact FERC Online Support at *FERCOnlineSupport@ferc.gov* or toll-free at (866) 208–3676, or TTY, contact (202) 502–8659. The Commission strongly encourages electronic filings. *See*, 18 CFR 385.2001(a)(1)(iii) and the instructions on the Commission's Web site under the e-Filing link.

**Magalie R. Salas,**

*Secretary.*

[FR Doc. E3–00413 Filed 11–28–03; 8:45 am]

BILLING CODE 6717–01–P

## DEPARTMENT OF ENERGY

### Federal Energy Regulatory Commission

**[Docket No. RP04–25–001]**

### Texas Eastern Transmission, L; Notice of Supplemental Filing

November 20, 2003.

Take notice that on November 17, 2003, Texas Eastern Transmission, LP (Texas Eastern) tendered for filing as part of its FERC Gas Tariff, Seventh Revised Volume No. 1, Fourth Revised Sheet No. 51B, to become effective December 1, 2003.

Texas Eastern states that the revised tariff sheet is filed as a supplement to its annual ASA filing made on October 17, 2003 in Docket No. RP04–25–000 (October 17 Filing). Texas Eastern states that the purpose of the supplemental filing is to comply with the Commission's requirement in its letter order dated February 7, 2003 in Docket Nos. CP02–17–004 and CP02–45–004 that Texas Eastern include in its next annual ASA filing either: (1) A demonstration that no gas is likely to be lost or unaccounted for on the Hanging Rock and Freehold laterals or (2) a mechanism to determine the amount of such losses and a rate to separately charge such lateral shippers for such losses.

Texas Eastern states that it is proposing an Applicable Shrinkage Percentage for lost and unaccounted for gas applicable to lateral service on the Hanging Rock and Freehold laterals, based upon the comparable lost and unaccounted for gas included in the October 17 Filing for system customers.

Texas Eastern states that copies of its filing have been mailed or, if requested, emailed to all affected customers of Texas Eastern and interested state commissions, as well as all parties on the Commission's official service list in this proceeding.

Any person desiring to protest said filing should file a protest with the Federal Energy Regulatory Commission,

888 First Street, NE., Washington, DC 20426, in accordance with § 385.211 of the Commission's Rules and Regulations. All such protests must be filed in accordance with § 154.210 of the Commission's Regulations. Protests will be considered by the Commission in determining the appropriate action to be taken, but will not serve to make protestants parties to the proceedings. This filing is available for review at the Commission in the Public Reference Room or may be viewed on the Commission's Web site at *http://www.ferc.gov* using the eLibrary link. Enter the docket number excluding the last three digits in the docket number field to access the document. For assistance, please contact FERC Online Support at *FERCOnlineSupport@ferc.gov* or toll-free at (866) 208–3676, or TTY, contact (202) 502–8659. The Commission strongly encourages electronic filings. *See*, 18 CFR 385.2001(a)(1)(iii) and the instructions on the Commission's Web site under the e-Filing link.

**Magalie R. Salas,**

*Secretary.*

[FR Doc. E3–00412 Filed 11–28–03; 8:45 am]

**BILLING CODE 6717–01–P**

## DEPARTMENT OF ENERGY

### Federal Energy Regulatory Commission

**[Docket No. CP04–16–000]**

### Transcontinental Gas Pipe Line Corporation; Notice of Application

November 21, 2003.

Take notice that on November 12, 2003, Transcontinental Gas Pipe Line Corporation (Transco), filed in Docket No. CP04–16–000, an application, in abbreviated form, pursuant to section 7(b) of the Natural Gas Act, as amended, and part 157 of the Rules and Regulations of the Federal Energy Regulatory Commission (Commission), for an order permitting and approving abandonment of certain firm sales service provided to Southwestern Virginia Natural Gas Company (SVGC) under Transco's Rate Schedule FS, as more fully set forth in the application which is on file with the Commission and open to public inspection.

Transco states that it entered into a firm sales agreement with SVGC on August 1, 1991, under which Transco sells gas to SVGC under Rate Schedule FS (FS Agreement).

Transco states that the Primary Term of the FS Agreement ended on March 31, 2001. Transco notes that by letter dated March 25, 2003, it provided SVGC with a two-year notice to terminate the subject FS Agreement as of April 1, 2005. Transco explains that, by letter agreement dated October 31, 2003, Transco and SVGC agreed to pursue accelerated abandonment of the FS Agreement with such accelerated abandonment to be effective April 1, 2004.

Transco further states that it is prepared to seek accelerated abandonment of any Rate Schedule FS services it provides to a similarly situated customer that requests such an accelerated abandonment.

Any person desiring to be heard or to protest said filing should file a motion to intervene or a protest with the Federal Energy Regulatory Commission, 888 First Street, NE., Washington, DC 20426, in accordance with § 385.214 or 385.211 of the Commission's Rules and Regulations. All such motions or protests must be filed on or before the date as indicated below. Protests will be considered by the Commission in determining the appropriate action to be taken, but will not serve to make protestants parties to the proceedings. Any person wishing to become a party must file a motion to intervene. This filing is available for review at the Commission in the Public Reference Room or may be viewed on the Commission's Web site at *http://www.ferc.gov* using the ''eLibrary''. Enter the docket number excluding the last three digits in the docket number field to access the document. For assistance, please contact FERC Online Support at *FERCOnlineSupport@ferc.gov* or toll-free at (866) 208–3676, or TTY, contact (202) 502–8659. The Commission strongly encourages electronic filings. *See,* 18 CFR 385.2001(a)(1)(iii) and the instructions on the Commission's Web site under the ''e-Filing'' link.

*Comment Date*: December 8, 2003.

**Magalie R. Salas,**

*Secretary.*

[FR Doc. E3–00401 Filed 11–28–03; 8:45 am]

**BILLING CODE 6717–01–P**

## DEPARTMENT OF ENERGY

### Federal Energy Regulatory Commission

**[Docket No. CP03–354–000]**

### Transcontinental Gas Pipe Line Corporation

November 20, 2003.

Take notice that on September 17, 2003, Transcontinental Gas Pipe Line Corporation (Transco), tendered for filing in Docket No. CP03–354–000 an application in abbreviated form, pursuant to section 7(b) of the Natural Gas Act (NGA), as amended, and the Rules and Regulations of the Federal Energy Regulatory Commission (Commission), for an order permitting and approving abandonment of an interruptible transportation service provided to Washington Gas Light Company (Washington Gas), under Transco's Rate Schedule X–118, all as more fully set forth in the application which is on file with the Commission and open to public inspection.

Transco states that it does not propose to abandon any facilities pursuant to the instant application. Transco further states that no service to any of its other customers will be affected by the abandonment authorization requested herein.

Any person desiring to be heard or to protest said filing should file a motion to intervene or a protest with the Federal Energy Regulatory Commission, 888 First Street, NE., Washington, DC 20426, in accordance with § 385.214 or 385.211 of the Commission's Rules and Regulations. All such motions or protests must be filed on or before the date as indicated below. Protests will be considered by the Commission in determining the appropriate action to be taken, but will not serve to make protestants parties to the proceedings. Any person wishing to become a party must file a motion to intervene. This filing is available for review at the Commission in the Public Reference Room or may be viewed on the Commission's Web site at *http://www.ferc.gov* using the ''eLibrary''. Enter the docket number excluding the last three digits in the docket number field to access the document. For assistance, please contact FERC Online Support at *FERCOnlineSupport@ferc.gov* or toll-free at (866) 208–3676, or TTY, contact (202) 502–8659. The Commission strongly encourages electronic filings. *See*, 18 CFR 385.2001(a)(1)(iii) and the instructions on the Commission's Web site under the ''e-Filing'' link. *Comment Date*: December 1, 2003.

**Magalie R. Salas,**

*Secretary.*

[FR Doc. E3–00410 Filed 11–28–03; 8:45 am]

**BILLING CODE 6717–01–P**

## DEPARTMENT OF ENERGY

### Federal Energy Regulatory Commission

**[Docket No. RP0–461–004]**

### Western Gas Interstate Company; Notice of Compliance Filing

November 20, 2003.

Take notice that on November 17, 2003, Western Gas Interstate Company (WGI), tendered for filing as part of its FERC Gas Tariff, Fourth Revised Volume No. 1, Substitute First Revised Sheet No. 224, to be effective November 1, 2003.

WGI states that the filing is being made in compliance with the Commission(s September 17, 2003 order in this proceeding.

WGI states that the purpose of the filing is to change the time by which WGI must act on certain discount requests from 3 p.m. to 4 p.m., and to provide that requests received after 4 p.m. will be acted on by 8:30 am on the next business day. WGI states that it inadvertently failed to include this tariff change in its October 7, 2003 compliance filing in Docket No. RP00–461–003.

WGI states that copies of this filing were served on its customers and interested state commissions.

Any person desiring to protest said filing should file a protest with the Federal Energy Regulatory Commission, 888 First Street, NE., Washington, DC 20426, in accordance with § 385.211 of the Commission's Rules and Regulations. All such protests must be filed in accordance with § 154.210 of the Commission's Regulations. Protests will be considered by the Commission in determining the appropriate action to be taken, but will not serve to make protestants parties to the proceedings. This filing is available for review at the Commission in the Public Reference Room or may be viewed on the Commission's Web site at *http://www.ferc.gov* using the eLibrary link. Enter the docket number excluding the last three digits the docket number field to access the document. For assistance, please contact FERC Online Support at *FERCOnlineSupport@ferc.gov* or toll-free at (866) 208–3676, or TTY, contact (202) 502–8659. The Commission strongly encourages electronic filings. *See,* 18 CFR 385.2001(a)(1)(iii) and the instructions on the Commission's Web site under the e-Filing link.

**Magalie R. Salas,**

*Secretary.*

[FR Doc. E3–00402 Filed 11–28–03; 8:45 am]

BILLING CODE 6717–01–P

## DEPARTMENT OF ENERGY

### Federal Energy Regulatory Commission

**[Docket Nos. CP04–13–000, CP04–14–000 and CP04–15–000]**

### Saltville Gas Storage Company L.L.C.; Notice of Application and Site Visit

November 20, 2003.

Take notice that on November 10, 2003, Saltville Gas Storage Company L.L.C. (Saltville), located at 1096 Ole Berry Drive, Abingdon, Virginia 24201, filed in Docket Nos. CP04–13–000, CP04–14–000 and CP04–15–000, an application for certificates of public convenience and necessity and related authorizations pursuant to section 7 of the Natural Gas Act (NGA), as amended, the Federal Energy Regulatory Commission(s Rules and Regulations (Commission), and the Commission(s Order in Saltville Gas Storage Company L.L.C., 104 FERC ¶ 61,273 (2003), all as more fully set forth in the application which is on file with the Commission and open to public inspection. This filing is available for review at the Commission or may be viewed on the Commission's web site at *http://www.ferc.gov* using the ''eLibrary'' link. Enter the docket number excluding the last three digits in the docket number field to access the document. For assistance, please contact FERC Online Support at *FERCOnlineSupport@ferc.gov* or toll-free at (866) 208–3676, or for TTY, contact (202) 502–8659.

Saltville states that it is requesting the Commission to issue: (1) A certificate of public convenience and necessity authorizing Saltville to construct, own, operate, and maintain natural gas facilities in Saltville, Virginia necessary to provide storage services as described herein; (2) a blanket certificate pursuant to Subpart G of Part 284 authorizing Saltville to provide firm and interruptible storage services, as well as interruptible park and loan services, on behalf of others, (3) an approval of the FERC Gas Tariff and initial rates as contained in Exhibit P, pursuant to which Saltville will provide services consistent with Order Nos. 636 and 637, *et seq.* and will have authority to charge negotiated rates; and (4) a blanket construction certificate pursuant to subpart F of part 157.

Commission staff will conduct a site visit of the Saltville project on Wednesday, December 3, 2003 and if needed Thursday, December 4, 2003. Interested parties should meet at the Saltville plant gate, 889 Adler Lane, Saltville, Virginia 24370 at 8 a.m.

Any questions concerning this application may be directed to Steven E. Tillman, General Manager of Regulatory Affairs, Saltville Gas Storage Company L.L.C., P. O. Box 1642, Houston, Texas 77251–1642, at (713) 627–5113 or fax (713) 627–5947.

There are two ways to become involved in the Commission's review of this project. First, any person wishing to obtain legal status by becoming a party to the proceedings for this project should file with the Federal Energy Regulatory Commission, 888 First Street, NE., Washington, DC 20426, a motion to intervene in accordance with the requirements of the Commission's Rules of Practice and Procedure (18 CFR 385.214 or 385.211) and the Regulations under the NGA (18 CFR 157.10) by the comment date, below. A person obtaining party status will be placed on the service list maintained by the Secretary of the Commission and will receive copies of all documents filed by the applicant and by all other parties. A party must submit 14 copies of filings made with the Commission and must mail a copy to the applicant and to every other party in the proceeding. Only parties to the proceeding can ask for court review of Commission orders in the proceeding.

However, a person does not have to intervene in order to have comments considered. The second way to participate is by filing with the Secretary of the Commission, as soon as possible, an original and two copies of comments in support of or in opposition to this project. The Commission will consider these comments in determining the appropriate action to be taken, but the filing of a comment alone will not serve to make the filer a party to the proceeding. The Commission's rules require that persons filing comments in opposition to the project provide copies of their protests only to the party or parties directly involved in the protest.

Protests and interventions may be filed electronically via the Internet in lieu of paper; see, 18 CFR 385.2001(a)(1)(iii) and the instructions on the Commission's web site under the ''e-Filing'' link. The Commission strongly encourages electronic filings.

*Comment Date*: December 11, 2003.

**Magalie R. Salas,**

*Secretary.*

[FR Doc. E3–00403 Filed 11–28–03; 8:45 am]

BILLING CODE 6717–01–P

## DEPARTMENT OF ENERGY

### Federal Energy Regulatory Commission

**[Project Nos. 12060–001, et al.]**

### Mark R. Frederick; Notice of Surrender of Preliminary Permits

November 20, 2003.

Take notice that the permittee for the subject projects has requested to surrender the preliminary permits due to unfavorable economic conditions in the State of California.

| Project No. | Project name | Stream | Expiration Date |
|---|---|---|---|
| 12060–001 | Rock Creek | Wise Canal & Rock Creek Lake | 01–31–2005 |
| 12073–001 | Wise P/House Outlet | Outflow into Auburn Ravine | 10–31–2004 |
| 12085–001 | Halsey Afterbay | Halsey P/House Afterbay | 09–30–2004 |
| 12100–001 | Rollins Diversion Dam | Bear River & Bear River Canal | 02–28–2005 |
| 12102–001 | Chicago Park P/House | Bear River & Chicago Park Flume | 03–31–2005 |
| 12103–001 | Chicago Park Flume | Bear River, Dutch Flat Afterbay & Dutch Flat Flume | 03–31–2005 |

The permits shall remain in effect through the thirtieth day after issuance of this notice unless that day is a Saturday, Sunday, or holiday as described in 18 CFR 385.2007, in which case each permit shall remain in effect through the first business day following that day. New applications involving these project sites, to the extent provided for under 18 CFR art 4, may be filed on the next business day.

**Magalie R. Salas,**

*Secretary.*

[FR Doc. E3–00405 Filed 11–28–03; 8:45 am]

**BILLING CODE 6717–01–P**

## ENVIRONMENTAL PROTECTION AGENCY

**[FRL–7592–7]**

### Availability of FY 02 Section 105 Grant Performance Reports for the Air Pollution Control Agencies of the States of Georgia, North Carolina, Tennessee and the Commonwealth of Kentucky, as Well as the Local Areas of Louisville, Kentucky and Forsyth County, NC

**AGENCY:** Environmental Protection Agency (EPA).

**ACTION:** Notice of availability of grantee performance evaluation reports.

**SUMMARY:** EPA's grant regulations (40 CFR 35.150) require the Agency to evaluate the performance of agencies which receive grants. EPA's regulations for regional consistency (40 CFR 56.7) require that the Agency notify the public of the availability of the reports of such evaluations. EPA performed FY 02 end-of-year evaluations of four state air pollution control programs (Georgia Department of Natural Resources; North Carolina Department of Environment and Natural Resources; Tennessee Department of Environment and Conservation; and Kentucky Department of Environmental Protection); and two local air pollution control programs (Louisville Metro Air Pollution Control District, KY; and Forsyth County Environmental Affairs Department, NC). The six evaluations were conducted to assess the agencies' performance under the grants awarded by EPA under authority of section 105 of the Clean Air Act. EPA Region 4 has prepared reports for each agency identified above and these reports are now available for public inspection.

**ADDRESSES:** The reports may be examined at the EPA's Region 4 office, 61 Forsyth Street, SW., Atlanta, Georgia 30303, in the Air, Pesticides, and Toxics Management Division.

**FOR FURTHER INFORMATION CONTACT:** Marie Persinger (404) 562–9048, for information concerning the State of Kentucky and Louisville, Kentucky; Mary Fox (404) 562–9053, for the States of Georgia and North Carolina and Forsyth County, North Carolina; and Rayna Brown (404) 562–9093, for information concerning the State of Tennessee. They may be contacted at the above Region 4 address.

Dated: November 18, 2003.

**A. Stanley Meiburg,**

*Deputy Regional Administrator, Region 4.*

[FR Doc. 03–29841 Filed 11–28–03; 8:45 am]

**BILLING CODE 6560–50–P**

## ENVIRONMENTAL PROTECTION AGENCY

**[FRL–7592–8]**

### Science Advisory Board Staff Office; Notification of Upcoming Science Advisory Board Meetings of the Multimedia, Multipathway, and Multireceptor Risk Assessment (3MRA) Modeling System Panel

**AGENCY:** Environmental Protection Agency (EPA).

**ACTION:** Notice.

**SUMMARY:** The EPA Science Advisory Board (SAB) Staff Office announces a conference call of the Multimedia, Multipathway, and Multireceptor Risk Assessment (3MRA) Modeling System Panel.

**DATES:** December 15, 2003. A public teleconference call meeting of the 3MRA Panel will be held from 1 p.m. to 5 p.m. (Eastern Time).

**ADDRESSES:** Participation in the teleconference meeting will be by teleconference only.

**FOR FURTHER INFORMATION CONTACT:** Members of the public who wish to obtain the call-in number and access code to participate in the teleconference meeting may contact EPA Science Advisory Board Staff, at telephone/voice mail: (202) 564–4533. Any member of the public wishing further information regarding the SAB or the 3MRA Panel may contact Ms. Kathleen White, Designated Federal Officer (DFO), U.S. EPA Science Advisory Board (1400A), 1200 Pennsylvania Avenue, NW., Washington, DC 20460; by telephone/voice mail at (202) 564–4559; or via e-mail at *white.kathleen@epa.gov.* General information about the SAB can be found

in the SAB Web site at *http://www.epa.gov/sab.*

**SUPPLEMENTARY INFORMATION:**

*Background:* Pursuant to the Federal Advisory Committee Act, Public Law 92–463, Notice is given that the 3MRA Panel will hold a public teleconference to allow the Panel to further edit and discuss approval of the Panel's final report, the Agency's Multimedia, Multipathway, and Multireceptor Risk Assessment (3MRA) Modeling System.

Background on the SAB, the 3MRA Panel, and this review was provided in a **Federal Register** notice published on April 11, 2003 (68 FR 17797–17800). Subsequent, additional meetings were announced in a **Federal Register** notice published on August 6, 2003 (68 FR 46606–46607).

More information regarding this review can be found at the SAB Web site at *http://www.epa.gov/sab/panels/3mramspanel.html.* The review documents and background information are located at *http://www.epa.gov/epaoswer/hazwaste/id/hwirwste/risk.htm.* Individuals who are unable to access the documents electronically may contact Mr. Stephen Kroner of the Office of Solid Waste at (703) 308–0468 or via e-mail to *kroner.stephen@epa.gov* to make other arrangements. A very limited number of paper copies can be made available in special circumstances.

*Procedures for Providing Public Comment.* It is the policy of the EPA Science Advisory Board (SAB) Staff Office to accept written public comments of any length, and to accommodate oral public comments whenever possible. The EPA SAB Staff Office expects that public statements presented at the 3MRA Panel's meetings will not be repetitive of previously submitted oral or written statements. *Oral Comments:* In general, each individual or group requesting an oral presentation at a face-to-face meeting will be limited to a total time of ten minutes (unless otherwise indicated). For conference call meetings, opportunities for oral comment will usually be limited to no more than three minutes per speaker and no more than fifteen minutes total. Interested parties should contact the Designated Federal Official (DFO) in writing (email, fax or mail) at least one week prior to the meeting in order to be placed on the public speaker list for the meeting. Speakers should bring at least 35 copies of their comments and presentation slides for distribution to the participants and public at the meeting. *Written Comments:* Although written comments are accepted until the date of the meeting (unless otherwise stated), written comments should be received in the SAB Staff Office at least one week prior to the meeting date so that the comments may be made available to the committee for their consideration. Comments should be supplied to the DFO at the address/contact information noted above in the following formats: one hard copy with original signature, and one electronic copy via e-mail (acceptable file format: Adobe Acrobat, WordPerfect, Word, or Rich Text files (in IBM-PC/Windows 95/98 format). Those providing written comments and who attend the meeting are also asked to bring 35 copies of their comments for public distribution.

*Meeting Accommodations:* Individuals requiring special accommodation to access these meetings, should contact Ms. White at least five business days prior to the meeting so that appropriate arrangements can be made.

Dated: November 4, 2003.

**Vanessa T. Vu,**

*Director, EPA Science Advisory Board Staff Office.*

[FR Doc. 03–29840 Filed 11–28–03; 8:45 am]

**BILLING CODE 6560–50–P**

## FEDERAL COMMUNICATIONS COMMISSION

### Notice of Public Information Collection(s) Being Reviewed by the Federal Communications Commission

November 20, 2003.

**SUMMARY:** The Federal Communications Commission, as part of its continuing effort to reduce paperwork burden invites the general public and other Federal agencies to take this opportunity to comment on the following information collection(s), as required by the Paperwork Reduction Act (PRA) of 1995, Public Law No. 104–13. An agency may not conduct or sponsor a collection of information unless it displays a currently valid control number. No person shall be subject to any penalty for failing to comply with a collection of information subject to the Paperwork Reduction Act (PRA) that does not display a valid control number. Comments are requested concerning (a) whether the proposed collection of information is necessary for the proper performance of the functions of the Commission, including whether the information shall have practical utility; (b) the accuracy of the Commission's burden estimate; (c) ways to enhance the quality, utility, and clarity of the information collected; and (d) ways to minimize the burden of the collection of information on the respondents, including the use of automated collection techniques or other forms of information technology.

**DATES:** Written Paperwork Reduction Act (PRA) comments should be submitted on or before December 31, 2003. If you anticipate that you will be submitting PRA comments, but find it difficult to do so within the period of time allowed by this notice, you should advise the contact listed below as soon as possible.

**ADDRESSES:** Direct all Paperwork Reduction Act (PRA) comments to Judith B. Herman, Federal Communications Commission, Room 1–C804, 445 12th Street SW., Washington DC 20554 or via the Internet to *Judith-B.Herman@fcc.gov.*

**FOR FURTHER INFORMATION CONTACT:** For additional information or copies of the information collection(s), contact Judith B. Herman at (202) 418–0214 or via the Internet at *Judith-B.Herman@fcc.gov.*

**SUPPLEMENTARY INFORMATION:**

*OMB Control No.:* 3060–0853.

*Title:* Receipt of Service Confirmation Form; Certification by Administrative Authority to Billed Entity of Compliance with Children's Internet Protection Act (CIPA)—Universal Service for Schools and Libraries; Certifications for Libraries Unwilling to Make a CIPA Certification for 2003.

*Form Nos.:* FCC Forms 479, 486 and 486–T.

*Type of Review:* Revision of a currently approved collection.

*Respondents:* Business or other for-profit and not-for-profit institutions.

*Number of Respondents:* 40,000.

*Estimated Time Per Response:* 1.5 hours.

*Frequency of Response:* Annual reporting requirement and third party disclosure requirement.

*Total Annual Burden:* 75,000 hours.

*Total Annual Cost:* N/A.

*Needs and Uses:* Following a district court decision that portions of CIPA were unconstitutional, the Commission modified FCC Forms 479 and 486 to remove certain language from the certifications for libraries. The Supreme Court reversed the district court decision and the Commission must now revise the form to enable libraries to certify their compliance with CIPA. The Commission has created a new FCC Form 486–T, a one-page form, to be completed by libraries that do not intend to comply with CIPA, but wish to receive support for the month and half of Funding Year 2003 during which CIPA was not enforced against libraries. FCC Form 486–T will not affect the

burden or the number of respondents because respondents will file either the FCC Form 486 or the FCC Form 486–T. FCC Form 486–T will only be valid for Funding Year 2003.

Federal Communications Commission.

**Marlene H. Dortch,**

*Secretary.*

[FR Doc. 03–29758 Filed 11–28–03; 8:45 am]

**BILLING CODE 6712–01–P**

---

## FEDERAL COMMUNICATIONS COMMISSION

### Public Information Collections Approved by Office of Management and Budget

November 20, 2003.

**SUMMARY:** The Federal Communications Commission (FCC) has received Office of Management and Budget (OMB) approval for the following public information collections pursuant to the Paperwork Reduction Act of 1995, Pub. L. 104–13. An agency may not conduct or sponsor and a person is not required to respond to a collection of information unless it displays a currently valid control number.

**FOR FURTHER INFORMATION CONTACT:** Paul J. Laurenzano, Federal Communications Commission, 445 12th Street, SW, Washington DC 20554, (202) 418–1359 or via the Internet at *plaurenz@fcc.gov.*

**SUPPLEMENTARY INFORMATION:** OMB Control No.: 3060–1046.

*OMB Approval date:* 11/14/2003.

*Expiration Date:* 04/30/2004.

*Title:* Implementation of the Pay Telephone Reclassification and Compensation Provisions of the Telecommunication Act of 1996, CC Docket No. 96–128, Report and Order and Second Order on Reconsideration.

*Form No.:* N/A.

*Estimated Annual Burden:* 3,048 responses; 609,600 total annual hours; 200 hours per respondent.

*Needs and Uses:* The Commission has issued a Report and Order (CC Docket 96–128/ FCC 03–235). In this proceeding, final rules are adopted that alter current payphone compensation rules. The new rules place the liability to compensate payphone service providers (PSPs) for payphone-originated calls on the facilities-based long distance carriers from whose switches such calls are completed. The new rules will not take effect immediately. Accordingly, the Order adopts, on an interim basis, the rules initially adopted in the *Second Order on Reconsideration* until the new rules become effective. The interim rules have received OMB approval as of 11/14/2003 and are now effective, but the final rules have not yet received OMB approval. The Commission will publish another **Federal Register** notice when it seeks OMB approval of the final rules.

*OMB Control No.:* 3060–0710.

*OMB Approval date:* 10/21/2003.

*Expiration Date:* 10/31/2006.

*Title:* Policy and Rules Concerning the Implementation of the Local Competiton Provisions in the Telecommunications Act of 1996—CC Docket No. 96–98.

*Form No.:* N/A.

*Estimated Annual Burden:* 1,052,693 responses; 1,134,050 total annual hours; approximately 1–2 hours per respondent.

*Needs and Uses:* The Commission adopted rules and regulations to implement parts of Sections 251 and 252 that affect local competition. Incumbent local exchange carriers (LECs) are required to offer interconnection, unbundled network elements, transport and termination, and wholesale rates for certain services to new entrants. Incumbent LECs must price such services at rates that are cost-based and just and reasonable and provide access to right-of-way as well as establish reciprocal compensation arrangements for the transport and termination of telecommunications traffic.

*OMB Control No.:* 3060–0921.

*OMB Approval date:* 10/21/2003.

*Expiration Date:* 10/31/2006.

*Title:* Petitions for LATA Boundary Modification for the Deployment of Advanced Services.

*Form No.:* N/A.

*Estimated Annual Burden:* 20 responses; 160 total annual hours; 20 hours per respondent.

*Needs and Uses:* Bell Operating Companies (BOCs) that petition for LATA boundary modifications to encourage the deployment of advanced service on a reasonable and timely basis are requested to include information in accordance with specified criteria. The Commission will use this information to review the petitions.

Federal Communications Commission.

**Marlene H. Dortch,**

*Secretary.*

[FR Doc. 03–29759 Filed 11–28–03; 8:45 am]

**BILLING CODE 6712–01–P**

## FEDERAL COMMUNICATIONS COMMISSION

### Notice of Public Information Collection(s) Being Submitted to OMB for Review and Approval

November 18, 2003.

**SUMMARY:** The Federal Communications Commissions, as part of its continuing effort to reduce paperwork burden invites the general public and other Federal agencies to take this opportunity to comment on the following information collection, as required by the Paperwork Reduction Act of 1995, Public Law 104–13. An agency may not conduct or sponsor a collection of information unless it displays a currently valid control number. No person shall be subject to any penalty for failing to comply with a collection of information subject to the Paperwork Reduction Act (PRA) that does not display a valid control number. Comments are requested concerning (a) whether the proposed collection of information is necessary for the proper performance of the functions of the Commission, including whether the information shall have practical utility; (b) the accuracy of the Commission's burden estimate; (c) ways to enhance the quality, utility, and clarity of the information collected; and (d) ways to minimize the burden of the collection of information on the respondents, including the use of automated collection techniques or other forms of information technology.

**DATES:** Written comments should be submitted on or before December 31, 2003. If you anticipate that you will be submitting comments, but find it difficult to do so within the period of time allowed by this notice, you should advise the contact listed below as soon as possible.

**ADDRESSES:** Direct all comments to Les Smith, Federal Communications Commission, Room 1–A804, 445 12th Street, SW., Washington, DC 20554 or via the Internet to *Leslie.Smith@fcc.gov* or Kim A. Johnson, Office of Management and Budget (OMB), Room 10236 NEOB, Washington, DC 20503, (202) 395–3562 or via the Internet at *Kim_A._Johnson@omb.eop.gov.*

**FOR FURTHER INFORMATION CONTACT:** For additional information or copy of the information collection(s) contact Les Smith at (202) 418–0217 or via the Internet at *Leslie.Smith@fcc.gov.*

**SUPPLEMENTARY INFORMATION:**

*OMB Control Number:* 3060–XXXX.

*Title: Telecommunication Relay Services and Speech-to-Speech Services for Individuals with Hearing and Speech*

*Disabilities,* CC Docket No. 98–67 (Second Report and Order, Order on Reconsideration), FCC 03–112.

*Form Number:* N/A.

*Type of Review:* New collection.

*Respondents:* Business or other for-profit entities.

*Number of Respondents:* 352.

*Estimated Time per Response:* 2 to 5.3 hours.

*Frequency of Response:* Recordkeeping; Annual and on occasion reporting requirements.

*Total Annual Burden:* 1,366 hours.

*Total Annual Cost:* None.

*Needs and Uses:* On June 17, 2003, the Commission released the *Second Report and Order, (''Report and Order''), Order on Reconsideration, In the Matter of Telecommunication Relay Services and Speech-to-Speech Services for Individuals with Hearing and Speech Disabilities,* CC 98–67, FCC 03–112. In the *Report and Order,* the Commission establishes new rules and amends existing rules governing TRS to further advance the functional equivalency mandate of section 225. The *Report and Order* also revises the requirements for handling emergency calls. In the *Order on Reconsideration,* the Commission provides clarify requirements for Communication Assistants, the speed of answer requirement and clarify certain procedural matters regarding TRS-related information to improve the usability of TRS for all Americans. On June 17, 2003, the Commission also released a *Notice of Proposed Rulemaking, In the Matter of Telecommunication Relay Services and Speech-to-Speech Services for Individuals with Hearing and Speech Disabilities,* CG Docket No. 03–123, FCC 03–112 that proposed rules in Section 64.604(c)(5)(iii) regarding certification for TRS providers to be eligible for receiving payments from the Interstate TRS Fund and proposed to revise Section 64.605 of the Commission rules. These proposed rules are also seeking OMB approval for the new collection associated with the *Second Report and Order, Order on Reconsideration,* CC Docket No. 98–67, FCC 03–112.

Federal Communications Commission.

**Marlene H. Dortch,**

*Secretary.*

[FR Doc. 03–29812 Filed 11–28–03; 8:45 am]

**BILLING CODE 6712–01–P**

## FEDERAL COMMUNICATIONS COMMISSION

### Notice of Public Information Collection(s) Being Reviewed by the Federal Communications Commission, Comments Requested

November 20, 2003.

**SUMMARY:** The Federal Communications Commission, as part of its continuing effort to reduce paperwork burden invites the general public and other Federal agencies to take this opportunity to comment on the following information collection(s), as required by the Paperwork Reduction Act (PRA) of 1995, Pub. L. No. 104–13. An agency may not conduct or sponsor a collection of information unless it displays a currently valid control number. No person shall be subject to any penalty for failing to comply with a collection of information subject to the Paperwork Reduction Act that does not display a valid control number. Comments are requested concerning (a) whether the proposed collection of information is necessary for the proper performance of the functions of the Commission, including whether the information shall have practical utility; (b) the accuracy of the Commission's burden estimate; (c) ways to enhance the quality, utility, and clarity of the information collected; and (d) ways to minimize the burden of the collection of information on the respondents, including the use of automated collection techniques or other forms of information technology.

**DATES:** Written Paperwork Reduction Act (PRA) comments should be submitted on or before January 30, 2004. If you anticipate that you will be submitting comments, but find it difficult to do so within the period of time allowed by this notice, you should advise the contact listed below as soon as possible.

**ADDRESSES:** Direct all Paperwork Reduction Act (PRA) comments to Judith B. Herman, Federal Communications Commission, Room 1–C804, 445 12th Street, SW., Washington, DC 20554 or via the Internet to *Judith-B.Herman@fcc.gov.*

**FOR FURTHER INFORMATION CONTACT:** For additional information or copies of the information collection(s), contact Judith B. Herman at 202–418–0214 or via the Internet at *Judith-B.Herman@fcc.gov.*

**SUPPLEMENTARY INFORMATION:**

*OMB Control No.:* 3060–0395.

*Title:* The ARMIS USOA Report (ARMIS Report 43–02); The ARMIS Service Quality Report (ARMIS Report 43–05); and the ARMIS Infrastructure Report (ARMIS Report 43–07).

*Report Nos.:* ARMIS 43–02, ARMIS 43–05, and ARMIS 43–07.

*Type of Review:* Revision of a currently approved collection.

*Respondents:* Business or other for-profit.

*Number of Respondents:* 51.

*Estimated Time Per Response:* 5.7–844 hours.

*Frequency of Response:* Annual reporting requirement and recordkeeping requirement.

*Total Annual Burden:* 21,004 hours.

*Total Annual Cost:* N/A.

*Needs and Uses:* The USOA Report provides the annual results of the carriers' activities for each account of the Uniform System of Accounts. The Service Quality Report provides service quality information in the areas of interexchange access service, installation and repair intervals, local service installation and repair intervals, trunk blockage, and total switch downtime for price cap carriers. The Infrastructure Report provides switch deployment and capabilities data. The ARMIS reports are being revised to further implement and simplify Phase 2 of the ARMIS reporting requirements.

*OMB Control No.:* 3060–0410.

*Title:* Forecast of Investment Usage Report and Actual Usage of Investment Report.

*Form Nos.:* FCC Forms 495A and 495B.

*Type of Review:* Revision of a currently approved collection.

*Respondents:* Business or other for-profit.

*Number of Respondents:* 192.

*Estimated Time Per Response:* 40 hours.

*Frequency of Response:* Annual reporting requirement.

*Total Annual Burden:* 7,680 hours.

*Total Annual Cost:* N/A.

*Needs and Uses:* The Forecast of Investment Usage and Actual Usage of Investment Reports are needed to detect and correct forecast errors that could lead to significant misallocation of network plant between regulated and non-regulated activities. FCC's purpose is to protect the regulated ratepayer from subsidizing the non-regulated activities of rate regulated telephone companies. Local exchange carriers file the annual reports based on study areas.

*OMB Control No.:* 3060–0496.

*Title:* The ARMIS Operating Data Report.

*Report No.:* ARMIS 43–08.

*Type of Review:* Revision of a currently approved collection.

*Respondents:* Business or other for-profit.

*Number of Respondents:* 55.
*Estimated Time Per Response:* 139 hours.
*Frequency of Response:* Annual reporting requirement.
*Total Annual Burden:* 7,627 hours.
*Total Annual Cost:* N/A.
*Needs and Uses:* The ARMIS Operating Data Report collects annual statistical data in a consistent format that is essential for the Commission to monitor growth, usage and reliability. The ARMIS reports are being revised to further implement and simplify Phase 2 of the ARMIS reporting requirements.

*OMB Control No.:* 3060–0511.
*Title:* The ARMIS Access Report.
*Report No.:* ARMIS 43–04.
*Type of Review:* Revision of a currently approved collection.
*Respondents:* Business or other for-profit.
*Number of Respondents:* 84.
*Estimated Time Per Response:* 153 hours.
*Frequency of Response:* Annual reporting requirement.
*Total Annual Burden:* 12,852 hours.
*Total Annual Cost:* N/A.
*Needs and Uses:* The ARMIS Access Report is needed to administer the Commission's accounting, jurisdictional separations and access charge rule; to analyze revenue requirements and rates of return, and to collect financial data from Tier 1 incumbent local exchange carriers. The ARMIS reports are being revised to further implement and simplify Phase 2 of the ARMIS reporting requirements.

*OMB Control No.:* 3060–0512.
*Title:* The ARMIS Annual Summary Report.
*Report No.:* ARMIS 43–01.
*Type of Review:* Revision of a currently approved collection.
*Respondents:* Business or other for-profit.
*Number of Respondents:* 119.
*Estimated Time Per Response:* 89 hours.
*Frequency of Response:* Annual reporting requirement.
*Total Annual Burden:* 10,591 hours.
*Total Annual Cost:* N/A.
*Needs and Uses:* The ARMIS Annual Summary Report contains financial and operating data and is used to monitor the incumbent local exchange carrier industry and to perform routine analyses of cost and revenues on behalf of the Commission. The ARMIS reports are being revised to further implement and simplify Phase 2 of the ARMIS reporting requirements.

*OMB Control No.:* 3060–0513.
*Title:* The ARMIS Joint Cost Report.
*Report No.:* ARMIS 43–03.
*Type of Review:* Revision of a currently approved collection.
*Respondents:* Business or other for-profit.
*Number of Respondents:* 85.
*Estimated Time Per Response:* 50 hours.
*Frequency of Response:* Annual reporting requirement.
*Total Annual Burden:* 4,250 hours.
*Total Annual Cost:* N/A.
*Needs and Uses:* The ARMIS Joint Cost Report is needed to administer the Commission's joint cost rules (Part 64) and to analyze data in order to prevent cross-subsidization of non-regulated operations by the regulated operations of Tier 1 carriers. The ARMIS reports are being revised to further implement and simplify Phase 2 of the ARMIS reporting requirements.

Federal Communications Commission.

**Marlene H. Dortch,**

*Secretary.*

[FR Doc. 03–29813 Filed 11–28–03; 8:45 am]

**BILLING CODE 6712–01–P**

---

## FEDERAL COMMUNICATIONS COMMISSION

### Notice of Public Information Collection(s) Being Reviewed by the Federal Communications Commission, Comments Requested

November 19, 2003.

**SUMMARY:** The Federal Communications Commission, as part of its continuing effort to reduce paperwork burden invites the general public and other Federal agencies to take this opportunity to comment on the following information collection(s), as required by the Paperwork Reduction Act (PRA) of 1995, Public Law No. 104–13. An agency may not conduct or sponsor a collection of information unless it displays a currently valid control number. No person shall be subject to any penalty for failing to comply with a collection of information subject to the Paperwork Reduction Act that does not display a valid control number. Comments are requested concerning (a) whether the proposed collection of information is necessary for the proper performance of the functions of the Commission, including whether the information shall have practical utility; (b) the accuracy of the Commission's burden estimate; (c) ways to enhance the quality, utility, and clarity of the information collected; and (d) ways to minimize the burden of the collection of information on the respondents, including the use of automated collection techniques or other forms of information technology.

**DATES:** Written Paperwork Reduction Act (PRA) comments should be submitted on or before January 30, 2004. If you anticipate that you will be submitting comments, but find it difficult to do so within the period of time allowed by this notice, you should advise the contact listed below as soon as possible.

**ADDRESSES:** Direct all Paperwork Reduction Act (PRA) comments to Les Smith, Federal Communications Commission, Room 1–A804, 445 12th Street, SW., Washington, DC 20554 or via the Internet to *Leslie.Smith@fcc.gov.*

**FOR FURTHER INFORMATION CONTACT:** For additional information or copies of the information collection(s), contact Les Smith at (202) 418–0217 or via the Internet at *Leslie.Smith@fcc.gov.*

**SUPPLEMENTARY INFORMATION:**

*OMB Control Number:* 3060–0771.
*Title:* Section 5.61, Procedure for Obtaining a Special Temporary Authorization in the Experimental Radio Service.
*Form Number:* N/A.
*Type of Review:* Extension of currently approved collection.
*Respondents:* Businesses or other for profit entities; Not-for-profit institutions; and State, Local or Tribal Government.
*Number of Respondents:* 500.
*Estimated Time per Response:* 1–2 hrs. for small installations; 3–4 hrs. for large installations.
*Frequency of Response:* On occasion reporting requirement.
*Total Annual Burden:* 500 hours.
*Total Annual Cost:* N/A.
*Needs and Uses:* The Commission may issue a special temporary authority (STA) under 47 CFR Part 5 of the rules in cases where a need is shown for operation of an authorized station for a limited time only, in a manner other than that specified in the existing authorization, but does not conflict with the Commission's rules. A request for STA may be filed as an informal application.

*OMB Control Number:* 3060–0953.
*Title:* Wireless Medical Telemetry Service (ET Docket No. 99–255).
*Form Number:* N/A.
*Type of Review:* Extension of currently approved collection.
*Respondents:* Businesses or other for profit entities; Not for profit institutions.
*Number of Respondents:* 1 respondent; 2,500 responses.
*Estimated Time per Response:* 1 to 4 hours depending upon installation size.
*Frequency of Response:* Recordkeeping; On occasion reporting requirement; and Third party disclosure.

*Total Annual Burden:* 10,000 hours.

*Total Annual Cost:* N/A.

*Needs and Uses:* The Commission allocated spectrum and established rules for a ''Wireless Medical Telemetry Service'' that allows potentially life critical equipment to operate in an interference-protected basis. Medical telemetry equipment is used in hospitals and health care facilities to transmit patient measurement data such as pulse and respiration rate to a nearby receiver, permitting greater patient mobility and increase comfort.

Federal Communications Commission.

**Marlene H. Dortch,**

*Secretary.*

[FR Doc. 03–29814 Filed 11–28–03; 8:45 am]

**BILLING CODE 6712–01–P**

## FEDERAL COMMUNICATIONS COMMISSION

### Notice of Public Information Collection(s) Being Reviewed by the Federal Communications Commission, Comments Requested

November 19, 2003.

**SUMMARY:** The Federal Communications Commission, as part of its continuing effort to reduce paperwork burden invites the general public and other Federal agencies to take this opportunity to comment on the following information collection(s), as required by the Paperwork Reduction Act (PRA) of 1995, Public Law No. 104–13. An agency may not conduct or sponsor a collection of information unless it displays a currently valid control number. No person shall be subject to any penalty for failing to comply with a collection of information subject to the Paperwork Reduction Act that does not display a valid control number. Comments are requested concerning (a) whether the proposed collection of information is necessary for the proper performance of the functions of the Commission, including whether the information shall have practical utility; (b) the accuracy of the Commission's burden estimate; (c) ways to enhance the quality, utility, and clarity of the information collected; and (d) ways to minimize the burden of the collection of information on the respondents, including the use of automated collection techniques or other forms of information technology.

**DATES:** Written Paperwork Reduction Act (PRA) comments should be submitted on or before January 30, 2004. If you anticipate that you will be submitting comments, but find it difficult to do so within the period of time allowed by this notice, you should advise the contact listed below as soon as possible.

**ADDRESSES:** Direct all Paperwork Reduction Act (PRA) comments to Judith B. Herman, Federal Communications Commission, Room 1–C804, 445 12th Street, SW., Washington, DC 20554 or via the Internet to *Judith-B.Herman@fcc.gov.*

**FOR FURTHER INFORMATION CONTACT:** For additional information or copies of the information collection(s), contact Judith B. Herman at 202–418–0214 or via the Internet at *Judith-B.Herman@fcc.gov.*

**SUPPLEMENTARY INFORMATION:**

*OMB Control No.:* 3060–0804.

*Title:* Universal Service—Health Care Providers Universal Service Program.

*Form Nos.:* FCC Forms 465, 466, 466–A and 467.

*Type of Review:* Revision of a currently approved collection.

*Respondents:* Business or other for-profit and not-for-profit institutions.

*Number of Respondents:* 12,800 respondents; 14,400 responses.

*Estimated Time Per Response:* 1.5–2.5 hours.

Frequency of Response: On occasion reporting requirement and third party disclosure requirement.

*Total Annual Burden:* 16,000 hours.

*Total Annual Cost:* N/A.

*Needs and Uses:* The Commission is considering changes to the Rural Health Care universal support mechanism in a pending Order. These potential changes could affect the respondent pool. The Commission is anticipating the possibility of adjusting the total annual responses and burden.

*OMB Control No.:* 3060–0942.

*Title:* Access Charge Reform, Price Cap Performance Review for Local Exchange Carriers, Low-Volume Long Distance Users, Federal-State Joint Board on Universal Service.

*Form No.:* N/A.

*Type of Review:* Extension of a currently approved collection.

*Respondents:* Business or other for-profit.

*Number of Respondents:* 108.

*Estimated Time Per Response:* 2–20 hours.

*Frequency of Response:* Annual and quarterly reporting requirements, recordkeeping requirement, and third party disclosure requirement.

*Total Annual Burden:* 6,677 hours.

*Total Annual Cost:* N/A.

*Needs and Uses:* Commission rules implemented the Coalition for Affordable Local and Long Distance Services (CALLS) proposal, which resolves major outstanding issues concerning access charges; the NPRM addressed implicit universal service support in access charges, the X-factor remand, the Low-Volume Long-Distance Users NOI, and on geographically deaveraging SLC's and the next scheduled price cap performance review. The Commission is seeking extension (no change) to this information collection in order to obtain the three year clearance.

*OMB Control No.:* 3060–0999.

*Title:* Exemption of Public Mobile Service Phones from the Hearing Aid Compatibility Act.

*Form No.:* N/A.

*Type of Review:* Revision of a currently approved collection.

*Respondents:* Individuals or households and business or other for-profit.

*Number of Respondents:* 965.

*Estimated Time Per Response:* 4 hours.

*Frequency of Response:* Biennial reporting requirement and third party disclosure requirement.

*Total Annual Burden:* 16,299 hours.

*Total Annual Cost:* N/A.

*Needs and Uses:* In a Report and Order, the Commission modified the exemption for telephones used with public mobile services from the requirements of the Hearing Aid Compatibility Act of 1988 (HAC Act). The Order requires digital wireless phone manufacturers and service providers to make certain digital wireless phones capable of effective use with hearing aids.

*OMB Control No.:* 3060–0600.

*Title:* Application to Participate in an FCC Auction.

*Form No.:* FCC Form 175.

*Type of Review:* Revision of a currently approved collection.

*Respondents:* Business or other for-profit, not-for-profit institutions, and state, local or tribal governments.

*Number of Respondents:* 11,000.

*Estimated Time Per Response:* 1.5 hours.

*Frequency of Response:* On occasion reporting requirement.

*Total Annual Burden:* 16,500 hours.

*Total Annual Cost:* N/A.

*Needs and Uses:* The information collected will be used by the Commission to determine if the applicant is legally, technically and financially qualified to participate in an FCC auction. In addition, if the applicant applies for status as a particular type of auction participant pursuant to the Commission's rules, the Commission will use the information to determine if the applicant is eligible for the status requested. The Commission's auction rules and requirements are

designed to ensure that the competitive bidding process is limited to serious qualified applicants and to deter possible abuse of the bidding and licensing process. Contemplated revisions to the current FCC Form 175 would revise the format for collecting information and incorporate in FCC Form 175 information previously collected in attachments. The Commission also contemplates integrating ownership information collected on the FCC Form 175 with ownership information collected in other forms in order to reduce the need for applicants to file duplicative information. The preceding estimated time per response reflects the incorporation of previously separate information collections and is an average that will depend in part on whether the applicant has previously submitted ownership information on other integrated forms. The Commission plans on using this information for all upcoming auctions and re-auctions.

*OMB Control No.:* 3060–0799.

*Title:* FCC Ownership Disclosure Information for the Wireless Telecommunications Bureau.

*Form No.:* FCC Form 602.

*Type of Review:* Revision of a currently approved collection.

*Respondents:* Individuals or households; business or other for-profit, not-for-profit institutions, and state, local or tribal governments.

*Number of Respondents:* 3,000.

*Estimated Time Per Response:* 1.5 hours.

*Frequency of Response:* On occasion reporting requirement.

*Total Annual Burden:* 3,000 hours.

*Total Annual Cost:* $450,000.

*Needs and Uses:* The FCC Form 602 is being revised to request additional information concerning if it's a proposed filing and a possible option to delete the filing. The data collected on this form included the FCC Registration Numbers for the applicant, any related FCC regulated businesses of the applicant/licensee, disclosable interest holders and any related FCC regulated businesses of disclosable interest holders. These data elements will not be displayed to the public. FCC Form 602 consists of a main form and associated schedule(s) for technical information. Filers will use multiple copies of FCC Form 602 as needed to list each direct and indirect owner and associated information.

*OMB Control No.:* 3060–0798.

*Title:* FCC Application for Wireless Telecommunications Bureau Radio Service Authorization.

*Form No.:* FCC Form 601.

*Type of Review:* Revision of a currently approved collection.

*Respondents:* Individuals or households, business or other for-profit, not-for-profit institutions, and state, local or tribal governments.

*Number of Respondents:* 250,520.

*Estimated Time Per Response:* 1.25 hours.

*Frequency of Response:* On occasion reporting requirement and third party disclosure requirement.

*Total Annual Burden:* 219,205 hours.

*Total Annual Cost:* $50,104,000.

*Needs and Uses:* The Wireless Telecommunications Bureau adopted on October 16, 2003 and released on November 4, 2003, *Allocations and Service Rules for the 71–76 GHz, 81–86 GHz and 92–95 GHz Bands,* pursuant to Parts 15 and 101. There is no change in the estimated average burden and number of respondents at this time as it is unknown as to how many additional respondents may partake in this ''Millimeter Wave'' spectrum. The FCC Form 601 is a consolidated, multi-part application or ''long form'' for market-based licensing and site-by-site licensing in the Universal Licensing System (ULS).

*OMB Control No.:* 3060–0895.

*Title:* Numbering Resource Optimization, CC Docket No. 99–200.

*Form No.:* FCC Form 502.

*Type of Review:* Revision of a currently approved collection.

*Respondents:* Business or other for-profit and state, local or tribal governments.

*Number of Respondents:* 5,400.

*Estimated Time Per Response:* 1–40 hours.

*Frequency of Response:* On occasion, semi-annual, and one-time reporting requirements, recordkeeping requirement and third party disclosure requirement.

*Total Annual Burden:* 181,890 hours.

*Total Annual Cost:* $7,859,000.

*Needs and Uses:* The FCC Form 502 is being revised to change the period for phone numbers held for specific end users or customers classified as reserved numbers from 45 day to 180 days. This change in the form instructions will be in the Utilization and Forecast forms in the usage categories.

Federal Communications Commission.

**Marlene H. Dortch,**

*Secretary.*

[FR Doc. 03–29815 Filed 11–28–03; 8:45 am]

BILLING CODE 6712–01–P

## FEDERAL RESERVE SYSTEM

### Change in Bank Control Notices; Acquisition of Shares of Bank or Bank Holding Companies

The notificants listed below have applied under the Change in Bank Control Act (12 U.S.C. 1817(j)) and § 225.41 of the Board's Regulation Y (12 CFR 225.41) to acquire a bank or bank holding company. The factors that are considered in acting on the notices are set forth in paragraph 7 of the Act (12 U.S.C. 1817(j)(7)).

The notices are available for immediate inspection at the Federal Reserve Bank indicated. The notices also will be available for inspection at the office of the Board of Governors. Interested persons may express their views in writing to the Reserve Bank indicated for that notice or to the offices of the Board of Governors. Comments must be received not later than December 12, 2003.

**A. Federal Reserve Bank of Chicago** (Patrick Wilder, Managing Examiner) 230 South LaSalle Street, Chicago, Illinois 60690-1414:

*1. Norman Wirkler*, Carbondale, Colorado; to acquire voting shares and Norman Wirkler; Mary Wirkler, Colorado Spring, Colorado; Helen Wirkler, Dallas, Texas; and Loma Mowat, Burr Ridge, Illinois; acting in concert to acquire additional voting shares of Garnavillo Bank Corporation, Garnavillo, Iowa, and thereby indirectly acquire additional voting shares of Garnavillo Savings Bank, Garnavillo, Iowa.

Board of Governors of the Federal Reserve System, November 24, 2003.

**Robert deV. Frierson,**

*Deputy Secretary of the Board.*

[FR Doc. 03–29781 Filed 11–28–03; 8:45 am]

BILLING CODE 6210–01–S

## FEDERAL RESERVE SYSTEM

### Formations of, Acquisitions by, and Mergers of Bank Holding Companies

The companies listed in this notice have applied to the Board for approval, pursuant to the Bank Holding Company Act of 1956 (12 U.S.C. 1841 *et seq.*) (BHC Act), Regulation Y (12 CFR Part 225), and all other applicable statutes and regulations to become a bank holding company and/or to acquire the assets or the ownership of, control of, or the power to vote shares of a bank or bank holding company and all of the banks and nonbanking companies owned by the bank holding company, including the companies listed below.

The applications listed below, as well as other related filings required by the Board, are available for immediate inspection at the Federal Reserve Bank indicated. The application also will be available for inspection at the offices of the Board of Governors. Interested persons may express their views in writing on the standards enumerated in the BHC Act (12 U.S.C. 1842(c)). If the proposal also involves the acquisition of a nonbanking company, the review also includes whether the acquisition of the nonbanking company complies with the standards in section 4 of the BHC Act (12 U.S.C. 1843). Unless otherwise noted, nonbanking activities will be conducted throughout the United States. Additional information on all bank holding companies may be obtained from the National Information Center website at *www.ffiec.gov/nic/*.

Unless otherwise noted, comments regarding each of these applications must be received at the Reserve Bank indicated or the offices of the Board of Governors not later than December 23, 2003.

**A. Federal Reserve Bank of Atlanta** (Sue Costello, Vice President) 1000 Peachtree Street, N.E., Atlanta, Georgia 30303:

*1. Citizens Banking Corporation*, Frostproof, Florida; to acquire 12.63 percent of the voting shares of American Banking Corporation, Lake Wales, Florida, and thereby indirectly acquire American Bank and Trust Company, Lake Wales, Florida.

**B. Federal Reserve Bank of Kansas City** (James Hunter, Assistant Vice President) 925 Grand Avenue, Kansas City, Missouri 64198-0001:

*1. First Okmulgee Corporation*, Okmulgee, Oklahoma; to acquire 12.65 percent of the voting shares of Coffeyville Bancorp, Inc., and thereby indirectly acquire CSB Bancorp, Inc., and Community State Bank, all of Coffeyville, Kansas.

Board of Governors of the Federal Reserve System, November 24, 2003.

**Robert deV. Frierson,**

*Deputy Secretary of the Board.*

[FR Doc. 03–29780 Filed 11–28–03; 8:45 am]

BILLING CODE 6210–01–S

## DEPARTMENT OF HEALTH AND HUMAN SERVICES

## Centers for Disease Control and Prevention

## Practices To Improve Training Skills of Home Visitors

*Announcement Type:* New.

*Funding Opportunity Number:* PA 04053.

*Catalog of Federal Domestic Assistance Number:* 93.136.

*Key Dates:* _____.

*Letter of Intent Deadline:* December 31, 2003.

*Application Deadline:* February 19, 2004.

### I. Funding Opportunity Description

**Authority:** This program is authorized under section 391 (a) of the Public Health Service Act (42 U.S.C. 280b (a)), as amended.

*Purpose*

The Centers for Disease Control and Prevention (CDC) announces the availability of fiscal year (FY) 2004 funds for a cooperative agreement program to conduct a systematic examination of the impact of home visitor training and factors related to the implementation (*i.e.*, competency of visitors providing services, adequate coverage of content according to a pre-specified protocol) of an existing efficacious or effective home visiting program on family outcomes of child maltreatment and risk behaviors for youth violence (*e.g.*, poor parent-child relations; harsh, lax, or inconsistent discipline). This program addresses the ''Healthy People 2010'' focus area of Injury and Violence Prevention.

Measurable outcomes of the program will be in alignment with the following performance goal for the National Center for Injury Prevention and Control (NCIPC): Conduct a targeted program of research to reduce injury-related death and disability.

*Research Objectives*

Home visiting programs to assist at-risk families have existed for more than a century and are widespread throughout the United States and Europe (United States General Accounting Office, 1990). Home-based programs have been reported to be effective in preventing child maltreatment (Guide to Community Preventive Services, 2002; MacLeod & Nelson, 2000; Roberts, 1997; Thornton *et al.*, 2000) and have been recommended as a child maltreatment prevention strategy (Guide to Community Preventive Services, 2002). In addition, evaluations have suggested that home visiting programs may positively impact children's physical health and well-being (*e.g.*, Bidgood & van de Sande, 1990; United States General Accounting Office, 1990). The literature suggests home visiting is a promising strategy to promote healthy family relationships and children's social, cognitive and character development, thereby decreasing children's risk for subsequent youth violence and delinquency (Thornton, Craft, Dahlberg, Lynch, & Baer, 2000).

However, effects of home visiting can be modest or short-lived (MacLeod & Nelson, 2000; Bidgood & van de Sande, 1990; Roberts, 1997), and the relative effectiveness of home visiting at preventing child maltreatment varies widely with the particular program being evaluated (Chaffin, 2001; Gomby, Culross, & Behrman, 1999; MacLeod & Nelson, 2000; MacMillan, MacMillan, Offord, Griffith, & MacMillan, 1994; Guterman, 1997). For most home visiting programs, information on the quality and implementation of services is limited, if not altogether lacking, suggesting the need to systematically examine: (1) training of service providers and (2) program implementation, as these variables may be key to home visiting's effectiveness.

Recommendations to improve the effectiveness of home visiting programs frequently include improved training, implementation, and quality and structure of services (*e.g.*, Gomby *et al.*, 1999; Roberts, 1997; United States General Accounting Office, 1990).

Research funded under this announcement is expected to address one of two research questions:

(1) Do performance criteria measures; fidelity measures, or other training practices (separately or together) improve staff performance and family outcomes in home visiting programs? Performance criteria measures require trainees to demonstrate mastery of skills to pre-determined standards. Fidelity measures require that those standards are maintained during follow-up observations, with retraining as needed to maintain the standards. Family outcomes relevant to this project would necessarily include but are not limited to incidents of child maltreatment, parenting behaviors, and children's behavioral, emotional, and cognitive adjustment.

(2) What training practices improve or enhance paraprofessionals' performance compared to professionals' performance and family outcomes in home visiting programs? Paraprofessionals are individuals without advanced training in the fields of mental health or medicine, such as peer mentors whereas professionals are individuals with advanced training in the fields of mental health or medicine, such as master's level social workers, psychologists, nurses, *etc.*

If a grantee chooses to respond to both questions, two separate applications should be submitted.

*Funding Priority*

Public comments on the proposed Funding Priority are not being solicited due to insufficient time prior to the funding date. Funding Priorities will be given to programs that address one of the research questions, provide evidence of an existing home visiting program, and are consistent with the CDC NCIPC Injury Research Agenda (*http://www.cdc.gov/ncipc*).

*Funding Preferences*

Funding preference will be given to proposals that:

- Provide more stringent and rigorous evaluation designs, and provide evidence of the capacity to develop a research design and methodology. A plan must be provided to evaluate the independent and combined impact of various factors related to training and program implementation on family outcomes.
- Demonstrate expertise in development and evaluation of preventive interventions for child maltreatment or youth violence.
- Provide evidence of the efficacy or effectiveness of an existing home visiting program for the prevention of child maltreatment and/or risk behaviors for youth violence.
- Include plans for ensuring that the project is carried out as designed and the target community or population receives or has access to the intervention (*i.e.*, program exposure).
- Provide a data analysis plan that is appropriate to research design and hypotheses, the intervention, and data collection measures. Plan must anticipate and evaluate the effect of threats to the internal and external validity of the specified research design.
- Target traditionally underserved communities.

*Activities*

Awardee activities for this program are as follows:

1. Develop and finalize the research design and methodology, data collection measures, methods, analyses, and disseminate the study results through publications and presentations.
2. Obtain approval of the study protocol by the recipient's local IRB. Collaborate with CDC in the development of a research protocol for CDC Institutional Review Board (IRB) review.
3. Develop a standardized established protocol (*e.g.*, manual) for the delivery of services to clients in their homes that allows for documentation of the nature and quality of the services delivered. The proposed interventions of the home visiting protocol must reflect cultural sensitivity and responsiveness.
4. Provide and evaluate a curriculum for the training of home visitors that allows for the examination of the impact of different training practices on trainees' skill and knowledge acquisition, competence, and delivery of services. The various training components or practices may be tested as a package, but should allow for dismantling of the individual effects of each component and should include documentation of training. The design should include adequate assessment and control for the pre-training characteristics of trainees, including trainees' personal attributes, knowledge, skills, and abilities.
5. Collect data on program implementation. This may include direct observation of staff performance, supervisor ratings, and additional indirect measures.
6. Collect data on the costs of training and implementation of the home visitation program.
7. Conduct one site visit to meet with CDC staff in Atlanta on an annual basis.
8. Complete all required reports as specified under ''Reporting Requirements'.

In a cooperative agreement, CDC staff is substantially involved in the program activities, above and beyond routine grant monitoring.

CDC Activities for this program are as follows:

1. Provide scientific and programmatic consultation. CDC will collaborate with project staff on decision-analyses, research design and methodology, data collection and analyses, programmatic issues, and dissemination of the study results in publications and presentations.
2. Assist in the development of a research protocol for Institutional Review Board (IRB) review by all cooperating institutions participating in the research project. The CDC IRB must review and approve the protocol initially and on at least an annual basis until the research project is completed.
3. CDC staff will monitor and review scientific and operational accomplishments of the project through conference calls, site visits, and review of technical reports.

## II. Award Information

*Type of Award:* Cooperative Agreement. CDC involvement in this program is listed in the *Activities* section above.

*Fiscal Year Funds:* FY 2004.

*Approximate Total Funding:* $500,000.

*Approximate Number of Awards:* Two.

*Approximate Average Award:* $250,000.

*Floor of Award Range:* $250,000.

*Ceiling of Award Range:* $250,000.

*Anticipated Award Date:* September 1, 2004.

*Budget Period Length:* 12 months.

*Project Period Length:* Five years.

Throughout the project period, CDC's commitment to continuation of awards will be conditioned on the availability of funds, evidence of satisfactory progress by the recipient (as documented in required reports), and the determination that continued funding is in the best interest of the Federal Government.

## III. Eligibility Information

*1. Eligible applicants:* Applications may be submitted by public and nonprofit private and for profit organizations and by governments and their agencies, such as:

- Public nonprofit organizations.
- Private nonprofit organizations.
- For profit organizations.
- Small, minority, women-owned businesses.
- Universities.
- Colleges.
- Research institutions.
- Hospitals.
- Community-based organizations.
- Faith-based organizations.
- Federally recognized Indian tribal governments.
- Indian tribes.
- Indian tribal organizations.
- State and local governments or their Bona Fide Agents (this includes the District of Columbia, the Commonwealth of Puerto Rico, the Virgin Islands, the Commonwealth of the Northern Marianna Islands, American Samoa, Guam, the Federated States of Micronesia, the Republic of the Marshall Islands, and the Republic of Palau).
- Political subdivisions of States (in consultation with States).

A Bona Fide Agent is an agency/organization identified by the state as eligible to submit an application under the state eligibility in lieu of a state application. If you are applying as a bona fide agent of a state or local government, you must provide a letter from the state or local government as documentation of your status. Place this documentation behind the first page of your application form.

*2. Cost Sharing or Matching:* Matching funds are not required for this program.

*3. Other Eligibility Requirements:* If your application is incomplete or non-responsive to the requirements listed

below, it will not be entered into the review process. You will be notified that your application did not meet the submission requirements. The following applicant requirements are:

- A principal investigator who has documented prior training and experience in conducting efficacy and effectiveness trials.
- A principal investigator who has conducted research, published the findings in peer-reviewed journals, and has specific authority and responsibility to carry out the proposed project.
- Demonstrated experience on the applicant's project team in conducting, evaluating, and publishing violence prevention research in peer-reviewed journals.
- Effective and well-defined working relationships within the performing organization and with outside entities, which will ensure implementation of the proposed activities.
- The requested funding amount should not be greater than the ceiling of the award range.
- It is especially important to include an abstract that reflects the project's focus, because the abstract will be used to help determine the responsiveness of the application.

**Note:** Title 2 of the United States Code section 1611 states that an organization described in section 501(c)(4) of the Internal Revenue Code that engages in lobbying activities is not eligible to receive Federal funds constituting an award, grant, or loan.

*4. Individuals Eligible To Become Principal Investigators:* Any individual with the skills, knowledge, and resources necessary to carry out the proposed research is invited to work with their institution to develop an application for support. Individuals from underrepresented racial and ethnic groups as well as individuals with disabilities are always encouraged to apply for CDC programs.

## IV. Application and Submission Information

*1. Address To Request Application Package*

To apply for this funding opportunity, use application form PHS 398 (OMB number 0925–0001 rev. 5/2001). Forms and instructions are available in an interactive format on the CDC Web site, at the following Internet address: *www.cdc.gov/od/pgo/forminfo.htm.*

Forms and instructions are also available in an interactive format on the National Institutes of Health (NIH) Web site at the following Internet address: *http://grants.nih.gov/grants/funding/phs398/phs398.html.*

If you do not have access to the Internet, or if you have difficulty accessing the forms online, you may contact the CDC Procurement and Grants Office Technical Information Management Section (PGO–TIM) staff at: 770–488–2700. Application forms can be mailed to you.

*2. Content and Form of Application Submission*

Letter of Intent (LOI)

CDC requests that you send a LOI if you intend to apply for this program. Although the LOI is not required, not binding, and does not enter into the review of your subsequent application, your LOI will be used to gauge the level of interest in this program, and to allow CDC to plan the application review. Your LOI must be written in the following format:

- Maximum number of pages: Two.
- Font size: 12-point unreduced.
- Single spaced.
- Paper size: 8.5 by 11 inches.
- Page margin size: One inch page.
- Printed only on one side of page.
- Written in English, avoid jargon.

Your LOI must contain the following information:

- Descriptive title of the proposed research.
- Name, address, e-mail address, and telephone number of the Principal Investigator.
- Names of other key personnel.
- Participating institutions.
- Number and title of this Program Announcement (PA).

Application

Follow the PHS 398 application instructions for content and formatting of your application. For further assistance with the PHS 398 application form, contact GrantsInfo, Telephone (301) 435–0714, E-mail: *GrantsInfo@nih.gov.* The Program Announcement Title and number must appear in the application.

You must include a research plan with your application. The research plan should be no more than 25 pages.

Your application will be evaluated on the criteria listed under *Section V. Application Review Information,* so it is important to follow them, as well as the *Research Objectives* and the *Administrative and National Policy Requirements* (AR's), in laying out your research plan.

Your research plan should address activities to be conducted over the entire project period. The research plan should consist of the following information:

1. Abstract. It is especially important to include an abstract that reflects the project's focus, because the abstract will be used to help determine the responsiveness of the application.

2. Program Goals and Objectives. Describe the goals and objectives the proposed research is designed to achieve in the short and long term. Specific research questions and hypotheses should be included.

3. Program Participants. Provide a justification and description of the specific population of families targeted, including the demographic and geographic characteristics of the community and/or neighborhood in which the intervention will take place. In addition, the proposal should provide evidence that the recipient has the capacity and community support necessary to successfully evaluate the training component of the home visiting program. Describe how the study sample(s) is defined. A description of how recruitment, retention and referral of participants will be handled should also be included.

4. Intervention. Describe the proposed strategies or components of the plan for implementing the research. This should include a description of the training and intervention components (including training criteria and how fidelity of training and the home-visiting program will be assessed), and procedures.

5. Evaluation Design. Describe the proposed design; methods and analysis plan for assessing the efficacy or effectiveness of the existing home-visiting program. The specific type of research method chosen should reflect the nature of the intervention, feasibility, and ethical considerations. Potential threats to the validity of the study should be described along with how such threats will be recognized and addressed. The status of all necessary measurement instruments should be described and include direct and indirect measures of child maltreatment and youth violence and/or risk for youth violence. If any materials are not extant, the methods and time frame for measure development, pilot testing, and validation should be given. For data collected from archival records (*e.g.*, CPS records, school records, etc.) the proposal should discuss issues of accessibility, reliability, and validity of those data.

6. Project Management. Provide evidence of the expertise, capacity, and support necessary to successfully implement and evaluate the impact of the program. Each existing or proposed staff position for the project should be described by job title, function, general duties, level of effort, and allocation of time. Management operation principles, structure, and organization should also be noted.

7. Collaborative Efforts. List and describe the current and proposed collaborations with government, health, or youth agencies, community- or faith-based organizations, minority organizations, and other researchers. Include letters of support and memoranda of understanding that specify the nature of past, present, and proposed collaborations, and the products/services/activities that will be provided by and to the applicant.

8. Data Sharing and release: Describe plans for the sharing and release of data (See AR–25 for additional information).

9. Project Budget: Provide a detailed budget for each activity undertaken, with accompanying justification of all operating expenses that is consistent with the stated objectives and planned activities of the project. This announcement does not use the modular budget format.

You are required to have a Dun and Bradstreet Data Universal Numbering System (DUNS) number to apply for a grant or cooperative agreement from the Federal government. Your DUNS number must be entered in item 11 of the face page of the PHS 398 application form. The DUNS number is a nine-digit identification number, which uniquely identifies business entities. Obtaining a DUNS number is easy and there is no charge. To obtain a DUNS number, access *www.dunandbradstreet.com* or call 1–866–705–5711. For more information, see the CDC Web site at *http://www.cdc.gov/od/pgo/funding/pubcommt.htm.*

*3. Submission Dates and Times*

*LOI Deadline Date:* December 31, 2003.

*Application Deadline Date:* February 19, 2004.

*Explanation of Deadlines:* Applications must be received in the CDC Procurement and Grants Office by 4 p.m. eastern time on the deadline date. If you send your application by the United States Postal Service or commercial delivery service, you must ensure that the carrier will be able to guarantee delivery of the application by the closing date and time. If CDC receives your application after closing due to: (1) Carrier error, when the carrier accepted the package with a guarantee for delivery by the closing date and time, or (2) significant weather delays or natural disasters, you will be given the opportunity to submit documentation of the carriers guarantee. If the documentation verifies a carrier problem, CDC will consider the application as having been received by the deadline.

This announcement is the definitive guide on application submission address and deadline. It supersedes information provided in the application instructions. If your application does not meet the deadline above, it will not be eligible for review, and will be discarded. You will be notified that your application did not meet the submission requirements.

CDC will not notify you upon receipt of your application. If you have a question about the receipt of your application, first contact your courier. If you still have a question, contact the PGO–TIM staff at: 770–488–2700. Before calling, please wait two to three days after the application deadline. This will allow time for applications to be processed and logged.

4. Intergovernmental Review of Applications

Executive Order 12372 does not apply to this program.

5. Funding Restrictions

Restrictions, which must be taken into account while writing your budget, are as follows: None.

If you are requesting indirect costs in your budget, you must include a copy of your indirect cost rate agreement. If your indirect cost rate is a provisional rate, the agreement must be less than 12 months of age.

6. Other Submission Requirements

*LOI Submission Address:* Submit your LOI by express mail delivery service, fax, or e-mail to: Robin Forbes, Centers for Disease Control and Prevention, National Center for Injury Prevention and Control, 4770 Buford Hwy, NE., Mailstop K–62, Atlanta, GA 30341, Phone: 770–488–4037, Fax: 770–488–1662, E-mail: *CIPERT@cdc.gov.*

*Application Submission Address:* Submit the original and five copies of your application by mail or express mail delivery service to: Technical Information Management-PA# 04053, CDC Procurement and Grants Office, 2920 Brandywine Road, Atlanta, GA 30341.

Applications may not be submitted electronically at this time.

## V. Application Review Information

*1. Criteria*

You are required to provide measures of effectiveness that will demonstrate the accomplishment of the various identified objectives of the cooperative agreement. Measures of effectiveness must relate to the performance goals stated in the ''Purpose'' section of this announcement. Measures must be objective and quantitative, and must measure the intended outcome. These measures of effectiveness must be submitted with the application and will be an element of evaluation.

The goals of CDC-supported research are to advance the understanding of biological systems, improve the control and prevention of disease and injury, and enhance health. In the written comments, reviewers will be asked to evaluate the application in order to judge the likelihood that the proposed research will have a substantial impact on the pursuit of these goals. The scientific review group will address and consider each of the following criteria in assigning the application's overall score, weighting them as appropriate for each application. If the applicant proposes to address both research questions in a single project, the ability of the project to address each of the research questions will be evaluated separately. The application does not need to be strong in all categories to be judged likely to have major scientific impact and thus deserve a high priority score. For example, an investigator may propose to carry out important work that by its nature is not innovative, but is essential to move a field forward.

The criteria are as follows:

*Significance:* Does this study address an important problem? If the aims of the application are achieved, how will scientific knowledge be advanced? What will be the effect of these studies on the concepts or methods that drive this field?

*Approach:* Are the conceptual framework, design, methods, and analyses adequately developed, scientifically rigorous, well-integrated, and appropriate to the aims of the project? Does the applicant acknowledge potential problem areas and consider alternative tactics?

*Innovation:* Does the project employ novel concepts, approaches or methods? Are the aims original and innovative? Does the project challenge existing paradigms or develop new methodologies or technologies?

*Investigator:* Is the investigator appropriately trained and well suited to carry out this work? Is the work proposed appropriate to the experience level of the principal investigator and other researchers (if any)?

*Environment:* Does the scientific environment in which the work will be done contribute to the probability of success? Does the proposed research take advantage of unique features of the scientific environment or employ useful collaborative arrangements? Is there evidence of institutional support?

*Additional Review Criteria:* In addition to the above criteria, the

following items will be considered in the determination of scientific merit and priority score:

1. Intervention. Is the potential efficacy or effectiveness of the proposed program within the target population or community theoretically justified and supported with epidemiological, methodological, and behavioral research? How feasible is the implementation of the efficacy or effectiveness study as proposed?

2. Dissemination. Are there plans for the dissemination of findings and the sharing and release of data? Are these plans well articulated? Do the plans include provision for disseminating findings to stakeholders outside of academia?

*Protection of Human Subjects from Research Risks:* Does the application adequately address the requirements of title 45 CFR part 46 for the protection of human subjects? Not scored; however, an application can be disapproved if the research risks are sufficiently serious and protection against risks is so inadequate as to make the entire application unacceptable.

*Inclusion of Women and Minorities in Research:* Does the application adequately address the CDC Policy requirements regarding the inclusion of woman, ethnic, and racial groups in the proposed research? This includes: (1) The proposed plan for the inclusion of both sexes and racial and ethnic minority populations for appropriate representation; (2) The proposed justification when representation is limited or absent; (3) A statement as to whether the design of the study is adequate to measure differences when warranted; and (4) A statement as to whether the plans for recruitment and outreach for study participants include the process of establishing partnerships with community(ies) and recognition of mutual benefits.

*Inclusion of Children as Participants in Research Involving Human Subjects:* The NIH maintains a policy that children (*i.e.*, individuals under the age of 21) must be included in all human subjects research, conducted or supported by the NIH, unless there are scientific and ethical reasons not to include them. This policy applies to all initial (Type 1) applications submitted for receipt dates after October 1, 1998.

All investigators proposing research involving human subjects should read the ''NIH Policy and Guidelines'' on the inclusion of children as participants in research involving human subjects that is available at *http://grants.nih.gov/grants/funding/children/children.htm.*

*Budget:* The reasonableness of the proposed budget and the requested period of support in relation to the proposed research.

*2. Review and Selection Process*

Applications will be reviewed for completeness by the Procurement and Grants Office (PGO) and for responsiveness of the eligibility information by the NCIPC. Incomplete applications and applications that are non-responsive to the eligibility criteria will not advance through the review process. You will be notified that the application did not meet submission requirements.

Applications that are complete and responsive to the PA will be subjected to a preliminary evaluation (streamline review) by a peer review committee, the Initial Review Group (IRG), convened by NCIPC, to determine if the application is of sufficient technical and scientific merit to warrant further review by the IRG. CDC will withdraw from further consideration applications judged to be noncompetitive and promptly notify the principal investigator or program director and the official signing for the applicant organization. Those applications judged to be competitive will be further evaluated by a dual review process.

1. The primary review will be a peer review conducted by the IRG. All applications will be reviewed for scientific merit in accordance with the review criteria listed above. Applications will be assigned a priority score based on the National Institutes of Health (NIH) scoring system of 100–500 points.

2. The secondary review will be conducted by the Science and Program Review Subcommittee (SPRS) of NCIPC's Advisory Committee for Injury Prevention and Control (ACIPC). The ACIPC Federal agency experts will be invited to attend the secondary review, and will receive modified briefing books (*i.e.*, abstracts, strengths and weaknesses from summary statements, and project officer's briefing materials). ACIPC Federal agency experts will be encouraged to participate in deliberations when applications address overlapping areas of research interest, so that unwarranted duplication in federally funded research can be avoided and special subject area expertise can be shared. The NCIPC Division Associate Directors for Science (ADS) or their designees will attend the secondary review in a similar capacity as the ACIPC Federal agency experts to assure that research priorities of the announcement are understood and to provide background regarding current research activities. Only SPRS members will vote on funding recommendations, and their recommendations will be carried to the entire ACIPC for voting by the ACIPC members in closed session. If any further review is needed by the ACIPC, regarding the recommendations of the SPRS, the factors considered will be the same as those considered by the SPRS.

The committee's responsibility is to develop funding recommendations for the NCIPC Director based on the results of the primary review, the relevance and balance of proposed research relative to the NCIPC programs and priorities, and to assure that unwarranted duplication of federally-funded research does not occur. The secondary review committee has the latitude to recommend to the NCIPC Director, to reach over better-ranked proposals in order to assure maximal impact and balance of proposed research. The factors to be considered will include:

a. The results of the primary review including the application's priority score as the primary factor in the selection process.

b. The relevance and balance of proposed research relative to the NCIPC programs and priorities.

c. The significance of the proposed activities in relation to the priorities and objectives stated in ''Healthy People 2010,'' the Institute of Medicine report, ''Reducing the Burden of Injury,'' and the ''CDC Injury Research Agenda.''

All awards will be determined by the Director of the NCIPC based on priority scores assigned to applications by the IRG, recommendations by the secondary review committee, *e.g.*, ACIPC, consultation with NCIPC senior staff, and the availability of funds.

## VI. Award Administration Information

*1. Award Notices*

Successful applicants will receive a Notice of Grant Award (NGA) from the CDC Procurement and Grants Office. The NGA shall be the only binding, authorizing document between the recipient and CDC. The NGA will be signed by an authorized Grants Management Officer, and mailed to the recipient fiscal officer identified in the application.

*2. Administrative and National Policy Requirements*

45 CFR Part 74 or 92

For more information on the Code of Federal Regulations, see the National Archives and Records Administration at the following Internet address: *http://www.access.gpo.gov/nara/cfr/cfr-table-search.html.*

The following additional requirements apply to this project:

- AR–1 Human Subjects Requirements
- AR–2 Requirements for Inclusion of Women and Racial and Ethnic Minorities in Research
- AR–8 Public Health System Reporting Requirements
- AR–9 Paperwork Reduction Act Requirements
- AR–10 Smoke-Free Workplace Requirements
- AR–11 Healthy People 2010
- AR–12 Lobbying Restrictions
- AR–13 Prohibition on Use of CDC Funds for Certain Gun Control Activities
- AR–14 Accounting System Requirements
- AR–15 Proof of Non-Profit Status
- AR–21 Small, Minority, and Women-Owned Business
- AR–22 Research Integrity
- AR–23 States and Faith-Based Organizations
- AR–24 Health Insurance Portability and Accountability Act Requirements
- AR–25 Release and Sharing of Data

Starting with the December 1, 2003, receipt date, all NCIPC funded investigators seeking more than $250,000 in total costs in a single year are expected to include a plan describing how the final research data will be shared/released or explain why data sharing is not possible. Details on data sharing/release, including the timeliness and name of the project data steward, should be included in a brief paragraph immediately following the Research Plan Section of the PHS 398 form. References to data sharing/release may also be appropriate in other sections of the application (*e.g.*, background and significance, human subjects requirements, etc.) The content of the data sharing/release plan will vary, depending on the data being collected and how the investigator is planning to share the data. The data sharing/release plan will not count towards the application page limit and will not factor into the determination scientific merit or priority scores. Investigators should seek guidance from their institutions, on issues related to institutional policies, local IRB rules, as well as local, state and Federal laws and regulations, including the Privacy Rule.

Further detail on the requirements for addressing data sharing in applications for NCIPC funding may be obtained by contacting NCIPC program staff or visiting the NCIPC Internet Web site at *http://www.cdc.gov/ncipc/osp/sharing_policy.htm*.

For more information on the Code of Federal Regulations, *see* the National Archives and Records Administration at the following Internet address: *http://www.access.gpo.gov/nara/cfr-table-search.html*.

*3. Reporting*

You must provide CDC with an original, plus two copies of the following reports:

1. Interim progress report, (PHS 2590, OMB Number 0925–0001, rev. 5/2001) no less than 90 days before the end of the budget period. The progress report will serve as your non-competing continuation application, and must contain the following elements:

a. Current Budget Period Activities and Objectives.

b. Current Budget Period Financial Progress.

c. New Budget Period Program Proposed Activity Objectives.

d. Detailed Line-Item Budget and Justification.

e. Additional Requested Information.

f. Measures of Effectiveness.

2. Financial status report, no more than 90 days after the end of the budget period.

3. Final financial and performance reports, no more than 90 days after the end of the project period.

At the completion of the project, the grant recipient will submit a brief (2500 to 5000 words) summary highlighting the findings and their implications for injury prevention programs, policies, *etc.*, that includes a plan for dissemination of the research findings. The results dissemination plan will include publications in peer-reviewed journals and other methodologies for sharing results with stakeholders outside of academic settings (*e.g.*, state and community groups, public health injury prevention practitioners).

These reports must be sent to the Grants Management Specialist listed in the ''Agency Contacts'' section of this announcement.

## VII. Agency Contacts

For general questions about this announcement, contact: Technical Information Management Section, CDC Procurement and Grants Office, 2920 Brandywine Road, Atlanta, GA 30341, Telephone: 770–488–2700.

For scientific/research program technical assistance, contact: Linda Anne Valle, PhD, Prevention Development and Evaluation Branch, Division of Violence Prevention, National Center for Injury Prevention and Control, 4770 Buford Hwy, MS K–60, Atlanta, GA 30341, Telephone: 770–488–4297, E-mail: *adv2@cdc.gov*.

For questions about peer review, contact: Gwen Cattledge, Science Review Administrator, National Center for Injury Prevention and Control, 4770 Buford Hwy, Mailstop K–02, Atlanta, GA 30341, Phone: 770–488–1430, E-mail: *gxc8@cdc.gov*.

For budget assistance, contact: Jim Masone, Grants Management (or Contract) Specialist, CDC Procurement and Grants Office, 2920 Brandywine Road, Atlanta, GA 30341, Telephone: 770–488–2736, E-mail: *zft2@cdc.gov*.

## VIII. Other Information

*References*

Chaffin, M. (2001). Programs to prevent child abuse and neglect. Newsletter of the Society of Pediatric Psychology, 25(3), 6–7.

Gomby, D. S., Culross, P. L., & Behrman, R. E. (1999). Home visiting: Recent program evaluations: Analysis and recommendations. Future of Children, 9(1), 4–26.

Guide to Community Preventive Services. New findings prove early childhood home visitation prevents child maltreatment. Retrieved October 17, 2002 from www.thecommunityguide.org.

Guterman, N. B. (1997). Early prevention of physical child abuse and neglect: Existing evidence and future directions. Child Maltreatment, 2, 12–34.

MacLeod, J., & Nelson, G. (2000). Programs for the promotion of family wellness and the prevention of child maltreatment: A meta-analytic review. Child Abuse & Neglect, 24, 1127–1149.

MacMillan, H. L., MacMillan, J. H., Offort, D. R., Griffith, L., & MacMillan, A. (1994). Primary prevention of child physical abuse and neglect: A critical review. Part I. Journal of Child Psychology and Psychiatry, 35, 835–856.

Roberts, R. (1997). Preventing child abuse and neglect through home visiting: Informing practice with research. The APSAC Advisor, 10(1), 7–9.

Thornton, T. N., Craft, C. A., Dahlberg, L. L., Lynch, B. S., Baer, K. (2000). Best practices of youth violence prevention: A sourcebook for community action. Atlanta, GA: Centers for Disease Control and Prevention, National Center for Injury Prevention and Control.

United States General Accounting Office, (1990). Home visiting: A promising strategy for at-risk families. (GAO/HRD Publication No. 90–83). Gaithersburg, MD: U.S. General Accounting Office.

Dated: November 24, 2003.

**Edward Schultz,**

*Acting Director, Procurement and Grants Office, Centers for Disease Control and Prevention.*

[FR Doc. 03–29788 Filed 11–28–03; 8:45 am]

BILLING CODE 4163–18–P

## DEPARTMENT OF HEALTH AND HUMAN SERVICES

### Centers for Disease Control and Prevention

### Rapid Strengthening of Blood Transfusion Services in Selected Countries in Africa and the Caribbean for the Ministries of Health and National Transfusion Services Under the President's Emergency Plan for AIDS Relief

*Announcement Type:* New, Cooperative Agreement.

*Funding Opportunity Number:* 04077.

*Catalog of Federal Domestic Assistance Number:* 93.943.

*Key Dates:*

• Application Deadline: March 1, 2004.

*Executive Summary:* An important aspect of the President Bush's Emergency Plan for AIDS Relief is to provide assistance to ensure a safe and adequate blood supply. The focus of this initiative is 14 countries in Africa and the Caribbean heavily affected by HIV/AIDS: Botswana, Côte d'Ivoire, Ethiopia, Haiti, Guyana, Kenya, Mozambique, Namibia, Nigeria, Rwanda, South Africa, Tanzania, Uganda, and Zambia. The purpose of this announcement is to rapidly provide support to the Ministries of Health or the Government's National Transfusion Services in the 14 targeted countries, with the goal of developing and implementing a national safe blood program with demonstrable results within the first year of the Emergency Plan. Specific activities include implementation of blood safety programs, including management, operations, and monitoring.

### I. Funding Opportunity Description

**Authority:** This program is authorized under section 301(a) and 307 of the Public Health Service Act, [42 U.S.C. 241 (a) and 242l] as amended and under Public Law 108–25 (United States Leadership Against HIV/AIDS, Tuberculosis and Malaria Act of 2003) [22 U.S.C. 7601].

*Purpose:* President Bush's Emergency Plan for AIDS Relief has called for immediate action to turn the tide of HIV/AIDS in Africa and the Caribbean, preventing at least seven million HIV infections within five years. An important aspect of the President's plan is to provide assistance to ensure a safe and adequate blood supply. The focus of this initiative is 14 countries in Africa and the Caribbean heavily affected by HIV/AIDS: Botswana, Côte d'Ivoire, Ethiopia, Haiti, Guyana, Kenya, Mozambique, Namibia, Nigeria, Rwanda, South Africa, Tanzania, Uganda, and Zambia. The World Health Organization (WHO) estimates that five to ten percent of all HIV transmissions are attributable to unsafe blood transfusions. Transmission of HIV and other blood-borne pathogens via blood transfusion is preventable by establishing an adequate supply of safe blood through a systematized blood transfusion service and minimizing unnecessary transfusions. However, according to the WHO, among blood donations in Africa in 2002, only 90 percent were screened for HIV, 55 percent for Hepatitis B virus, and only 40 percent for Hepatitis C virus.

The rapid implementation of safe blood programs and precautions against medical transmission of HIV is a priority area for the President's plan. The purpose of this announcement is to rapidly provide support to Ministries of Health and National Transfusion Services in the 14 targeted countries, with the goal of developing and implementing a national safe blood program in each country with demonstrable results even within the first year of the Emergency Plan.

Measurable outcomes of this program will be in alignment with the following performance goal for President Bush's Emergency Plan for AIDS Relief: Prevent 7 million new HIV infections. The initiative will involve large-scale prevention efforts, including the rapid establishment and strengthening of safe blood transfusion services.

This initiative is a coordinated effort led by the Office of the Global AIDS Coordinator at the Department of State and involves various U.S. Federal Government agencies, including, the Department of State, the Department of Health and Human Services (HHS), the Department of Defense, and the U.S. Agency for International Development.

*Activities:* Awardee activities for this program area are as follows: *A. Infrastructure*—Assess current infrastructure needs for a national, regionalized blood transfusion system, including regional blood collection and processing facilities, laboratory testing equipment and supplies. Strengthen regional blood collection facilities and capacity in major urban areas, preferably near major health care facilities. Provide standard blood collection and laboratory equipment and reagents to regional blood collection facilities to collect blood and test it for transfusion-transmitted infections, and to perform blood grouping and cross matching.

*B. Blood collection*—Develop generic and site-specific protocols for obtaining, handling and storing, transporting, and distributing blood for use in blood collection facilities. Develop and maintain a network of blood donor recruiters and blood donor counselors to operate from each regional center. Develop and maintain a system to identify a network of low risk and repeat blood donors. Manage blood collection facilities that have the capacity to obtain, handle and store blood safely with good recordkeeping. Implement effective quality assurance procedures for collecting and storing blood.

*C. Testing*—Develop generic national and site-specific protocols for testing blood for HIV, hepatitis and syphilis. Manage blood testing facilities, ensuring good recordkeeping. Implement effective quality assurance procedures for testing blood.

*D. Transfusion and Blood Utilization*—Develop and implement national guidelines for the appropriate use of blood and blood products, nationally and regionally. Develop blood utilization review and quality assurance systems for blood usage.

*E. Training*—Develop and provide training programs and continuing education programs for health care professionals involved with blood transfusion services, such as physicians, nurses, physician assistants, community health aides, counselors, and laboratory technicians in the fields of blood donor recruitment and blood collection. Develop and provide training programs and continuing education programs for physicians and laboratory technicians in basic principles and practice of blood banking and transfusion medicine. Develop educational programs for health care providers, nurses and the general public on safe transfusion practices, including reducing the demand for unnecessary transfusions and recognizing community norms in practices regarding blood transfusions.

*F. Monitoring and evaluation*—Implement a system for reviewing and adjusting program activities based on monitoring information. Measure clinical outcomes to assess the impact of the program.

Funding will be provided to initiate new programs or expand existing programs (*e.g.*, expanding from one region to other regions of the same country) that include the above components. Technical assistance in support of the activities listed in this program announcement will be provided to the Ministries of Health or the National Transfusion Services by CDC, as well as by the organizations that successfully compete for funding under a separate CDC cooperative agreement program announcement focused on the

provision of technical assistance for blood safety activities in the targeted countries.

In a cooperative agreement, HHS/CDC staff is substantially involved in the program activities, above and beyond routine grant monitoring. HHS will work under the guidance and supervision of the Office of the Global AIDS Coordinator at the Department of State.

HHS/CDC Activities for this program are as follows:

A. Provide scientific and technical assistance in refining the operational plan.

B. Provide ongoing technical assistance in addressing problems encountered in implementing your plan. This may be provided directly by HHS/CDC staff or through organizations that successfully compete for funding under a separate HHS/CDC cooperative agreement program announcement focused on the provision of technical assistance for blood safety activities with the 14 targeted countries.

C. Assist in assessing program operations and in evaluating overall effectiveness of your program.

D. Staff in both headquarters (HHS/CDC Atlanta and HHS/CDC in country) and in the designated countries will assure that other related U.S. Government activities are well coordinated with National Programs in each country.

## II. Award Information

*Type of Award:* Cooperative Agreement. HHS/CDC involvement in this program is listed in the Activities Section above.

*Fiscal Year Funds:* FY 2004.

*Approximate Total Funding:* $42 million.

*Approximate Number of Awards:* 14.

*Approximate Average Award:* $3 million.

*Floor of Award Range:* $500,000.

*Ceiling of Award Range:* $5 million.

*Anticipated Award Date:* March 25, 2004.

*Budget Period Length:* 12 months.

*Project Period Length:* 5 years.

Throughout the project period, CDC's commitment to continuation of awards will be conditioned on the availability of funds, evidence of satisfactory progress by the recipient (as documented in required and certified technically acceptable semi-annual program and financial reports), and the determination that continued funding is in the best interest of the U.S. Government.

## III. Eligibility Information

*III.1. Eligible applicants:* Applications may be submitted by Ministries of Health, National Blood Transfusion Services or their bona fide agents in the 14 targeted countries: Botswana, Côte d'Ivoire, Ethiopia, Haiti, Guyana, Kenya, Mozambique, Namibia, Nigeria, Rwanda, South Africa, Tanzania, Uganda, and Zambia.

A Bona Fide Agent is an agency/organization identified by the Ministry of Health as eligible to submit an application under the Ministry eligibility in lieu of a Ministry application. If you are applying as a bona fide agent of a Ministry, you must provide a letter from the state as documentation of your status. Place this documentation behind the first page of your application form.

*III.2. Cost Sharing or Matching:* Matching funds are not required for this program.

*III.3. Other Eligibility Requirements:* If you request a funding amount greater than the ceiling of the award range, your application will be considered non-responsive and will not be entered into the review process. You will be notified that your application did not meet the submission requirements.

**Note:** Title 2 of the United States Code section 1611 states that an organization described in section 501(c)(4) of the Internal Revenue Code that engages in lobbying activities is not eligible to receive Federal funds constituting an award, grant, or loan.

## IV. Application and Submission Information

*IV.1. Address to Request Application Package:* To apply for this funding opportunity use application form PHS 5161. Forms are available on the United States Government (USG) web site, at the following Internet address: *http://www.cdc.gov/od/pgo/forminfo.htm.*

If you do not have access to the Internet, or if you have difficulty accessing the forms on-line, you may contact the USG Procurement and Grants Office Technical Information Management Section (PGO–TIM) staff at: 770–488–2700. Application forms can be mailed to you.

*IV.2. Content and Form of Submission:* You must submit a signed original and two copies of your application forms.

You are required to have a Dun and Bradstreet Data Universal Numbering System (DUNS) number to apply for a grant or cooperative agreement from the USG. The DUNS number is a nine-digit identification number, which uniquely identifies business entities. Obtaining a DUNS number is easy and there is no charge. To obtain a DUNS number, access *http://www.dunandbradstreet.com* or call 1–866–705–5711. For more information, *see* the USG web site at: *http://www.cdc.gov/od/pgo/funding/pubcommt.htm.*

If your application form does not have a DUNS number field, please write your DUNS number at the top of the first page of your application, and/or include your DUNS number in your application cover letter.

You must include a project narrative with your application forms. Your narrative must be submitted in the following format:

- Maximum number of pages: 30—If your narrative exceeds the page limit, only the first pages which are within the page limit will be reviewed.
- Font size: 12 point unreduced.
- Paper size: 8.5 by 11 inches.
- Page margin size: 1″—top, bottom, right, and left.
- Printed only on one side of page.
- Held together only by rubber bands or metal clips; not bound in any other way.
- Written in English, avoid jargon.

Your narrative should address activities to be conducted over the entire project period, and must include the following items in the order listed:

*A. Need and Experience (4 Pages Maximum)*

Describe the need for services in the country or regions in which you intend to provide blood transfusion safety services. Provide evidence that your organization has experience in and is currently developing or maintaining blood safety programs in one or more of the following countries: Botswana, C''te d'Ivoire, Ethiopia, Haiti, Guyana, Kenya, Mozambique, Namibia, Nigeria, Rwanda, South Africa, Tanzania, Uganda, and Zambia. Address the following:

1. Estimated number of transfusions; age-specific prevalence for HIV, hepatitis and syphilis; estimated number of transfusion-related infections from HIV, hepatitis and syphilis-contaminated blood.

2. Estimated number of blood units needed for an adequate blood supply, the number of additional blood units that must be collected to meet the supply need, and number of test kits needed annually to test the entire blood supply for HIV, hepatitis and syphilis.

3. Number of needed regional blood collection and testing centers, and the population covered by each center.

4. Need for blood safety education and training activities.

5. Need for blood donor selection and recruitment strategies.

*B. Current Blood Bank and Transfusion Service Activities (8 Pages Maximum)*

Describe the blood transfusion system activities for the regions in which you plan to provide blood transfusion safety services. Address the following:

1. *Infrastructure*—Describe the current blood transfusion system infrastructure, including regional blood collection facilities, laboratory testing equipment, and supplies. Describe their location and access to major urban population centers.

2. *Blood collection*—Describe the current protocols and systems for collecting, handling and distributing units of blood. Describe the organization of blood donor recruitment and counseling activities. Describe the management of blood collection facilities, record-keeping and quality assurance activities. Describe your activities to promote blood donor community mobilization in the proposed areas, including relationships with other organizations that provide services.

3. *Testing*—Describe the current system of testing blood for HIV, hepatitis and syphilis. Include a description of the following: (a) the type and number of laboratory facilities for testing of HIV and other transfusion transmitted infections; (b) staff qualifications; (c) the number and types of tests performed by each facility in the past 12 months; and (d) the percent of the blood supply currently tested; (e) the capability of performing these tests at each facility including type of equipment used; and (f) current quality assurance procedures.

4. *Transfusion and Blood Utilization*—Describe current use of national/regional guidelines for blood transfusion therapy and efforts or systems for blood utilization review and the reduction of unnecessary blood transfusions.

5. #*Training activities*—Describe current training programs for blood transfusion safety for physicians, laboratory technologists, donor recruiters and nurses. Include information the types and numbers of persons trained, training curricula, training facilities, and the trainers.

6. *Monitoring and evaluation*—Describe the current system to record important program indicators such as the monthly number of units of safe blood made available, the number of persons receiving safe blood each month, the blood supply deficit, and the number of persons with serious adverse consequences to transfusions.

*C. Goals (4 Pages Maximum)*

*Address the following:*

1. Provide goals, objectives, and timeline for implementation of the program plan.

2. Provide measures of effectiveness by which you can assess the success of the program.

3. Provide letters of support from organizations with which you intend to work. These letters should indicate support for the goals and objectives of your proposed project and indicate what support they will provide, *e.g.*, referrals to your program.

*D. Rapid Expansion of Blood Transfusion Safety Services (8 Pages Maximum)*

Describe your plans for increasing the quality and extent of safe blood transfusion services. Describe your plans for increasing the number of units of safe blood available for transfusion and plans for reducing unnecessary transfusions. *If an applicant plans to sub-contract out to other organizations, this strategy must be clearly identified and explained in the application.* Address the following areas:

1. *Infrastructure*—Describe your plans to assess and expand the current blood transfusion system infrastructure, including regional blood collection facilities, laboratory testing and processing equipment, and supplies.

2. *Blood collection*—Describe your plans for expanding the current systems for collecting, handling, and distributing units of blood. Describe your plans for the expansion of blood donor recruitment and counseling activities. Describe your plans for the development of blood collection facilities management, record-keeping and quality assurance activities. Describe your planned activities to promote blood donor community mobilization in the proposed areas, including relationships with other organizations that provide the services.

3. *Testing*—Describe your plans to expand the current system of testing blood for HIV, hepatitis, and syphilis. Describe plans to implement or expand current quality assurance procedures.

4. *Transfusion and Blood Utilization*—Describe plans to implement the use of national or regional guidelines for blood transfusion therapy and efforts or systems for blood utilization review and the reduction of unnecessary blood transfusions.

5. *Training activities*—Describe proposed training programs for blood transfusion safety for physicians, laboratory technologists, blood donor recruiters, and nurses. Include information about proposed course titles, types and numbers of persons to be trained, length of each course, development of training facilities, and trainers.

6. *Monitoring and evaluation*—Describe the proposed system to use important program indicators such as the monthly number of units of safe blood made available, the number of persons receiving safe blood each month, the blood supply deficit, and the number of persons with serious adverse consequences to transfusions.

7. *Sustainability*—Applicants should develop a one-page description of capacity building activities for each year's work plan. Proposed activities must include capacity building as defined as activities promoting host country infrastructure development and strengthening of management, service delivery, and evaluation systems and clinical/cultural competency.

In order to accomplish sustainable systems development the following activities are suggested:

- Identify key stakeholders and engage potential in-country partners;
- Develop or expand a formal (preferably host country) advisory group to plan for on-going services;
- Define the components of care with other health or social service providers;
- Research funding sources; and
- Develop an exit plan.

The overall strategy and program must fit into National host country strategies including continuation of the program funding and staffing.

*E. Management Plan, Staffing, and Infrastructure (6 Pages Maximum)*

1. *Management plan*—Provide an organizational chart and describe the responsibilities for each of the key staff.

2. *Staffing*—Describe the number and types of staff needed to assist with technical guidance and training activities.

3. *Infrastructure*—Describe the physical facilities in which the proposed activities will be carried out and the equipment needed.

4. *Human Resources, Management and Administration*—Describe plans to provide or obtain all material and human resources necessary for the development, implementation, management, operation, procurement, monitoring, and quality assurance of all program activities.

5. *Coordination with National Programs*—Describe the organization's strategy to coordinate proposed activities within the context of national programs.

*F. Budget Narrative (No Page Limit)*

Guidance for completing your budget can be found on the USG web site, at the following address: *http://www.cdc.gov/od/pgo/funding/budgetguide.htm.*

Additional information may be included in the application appendices. The appendices will not be counted toward the narrative page limit. This additional information includes: Curriculum Vitae, Resumes, Organizational Charts, Letters of Support, and other pertinent documents.

*IV. 3. Submission Dates and Times:*

*Application Deadline Date:* March 1, 2004.

*Explanation of Deadlines:* Applications must be received in the CDC Procurement and Grants Office by 4:00 p.m. Eastern Time on the deadline date. If you send your application by the United States Postal Service or commercial delivery service, you must ensure that the carrier will be able to guarantee delivery of the application by the closing date and time. If CDC receives your application after closing due to: (1) carrier error, when the carrier accepted the package with a guarantee for delivery by the closing date and time, or (2) significant weather delays or natural disasters, you will be given the opportunity to submit documentation of the carriers guarantee. If the documentation verifies a carrier problem, CDC will consider the application as having been received by the deadline.

This program announcement is the definitive guide on application format, content, and deadlines. It supersedes information provided in the application instructions. If your application does not meet the deadline above, it will not be eligible for review, and will be discarded. You will be notified that your application did not meet the submission requirements.

CDC will not notify you upon receipt of your application. If you have a question about the receipt of your application, first contact your courier. If you still have a question, contact the PGO-TIM staff at: 770–488–2700. Before calling, please wait two to three days after the application deadline. This will allow time for applications to be processed and logged.

*IV.4. Intergovernmental Review of Applications:* Executive Order 12372 does not apply to this program.

*IV.5. Funding Restrictions:* Funding restrictions, which must be taken into account while writing your budget are as follows:

- Funds may be used only for activities associated with strengthening blood transfusion services. USG funds may be used for direct costs such as salaries; necessary travel; operating costs, including supplies, fuel, utilities, *etc.*; staff training costs, including registration fees and purchase and rental of training related equipment; and purchase of HIV testing reagents, test kits, and laboratory equipment for HIV testing.
- No funds made available under this solicitation may be used to provide assistance to any group or organization that does not have a policy explicitly opposing prostitution and sex trafficking. This written statement of certification must be signed by authorized person(s) within the applicant group or organization, including the individuals submitting the application. No funds made available under this solicitation may be used to promote or advocated the legalization or practice of prostitution or sex trafficking. Nothing in the preceding two sentences shall be construed to preclude the provision to individuals of palliative care, treatment, or post-exposure pharmaceutical prophylaxis, and necessary pharmaceuticals and other commodities, including test kits, condoms, and, when proven effective, microbicides.
- No funds appropriated under this solicitation shall be used to carry out any program of distributing sterile needles or syringes for the hypodermic use of any illegal drug.
- Applicants may contract with other organizations under this program; however, the applicant must perform a substantial portion of the activities (including program management and operations, and delivery of services for which funds are requested).
- The costs that are generally allowable in grants to domestic organizations are allowable to foreign institutions and international organizations, with the following exception: With the exception of American University, Beirut and the World Health Organization, indirect costs will not be paid (either directly or through a sub-award) to organizations located outside the territorial limits of the United States or to international organizations regardless of their location.
- All requests for funds contained in the budget shall be stated in U.S. dollars. Once an award is made, the U.S. Government will not compensate foreign grantees for currency exchange fluctuations through the issuance of supplemental awards.
- A fiscal Recipient Capability assessment may be required, prior to or post award, in order to review the applicant's business management and fiscal capabilities regarding the handling of U.S. Federal funds.
- You must obtain an annual audit of these U.S. Government funds (program-specific audit) by a U.S.—based audit firm with international branches and current licensure/authority in-country, and in accordance with International Accounting Standards or equivalent standard(s) approved in writing by the U.S. Government.

*IV.6. Other Submission Requirements:* Submit your application by mail or express delivery service to: Technical Information Management—PA#04077, CDC Procurement and Grants Office, 2920 Brandywine Road, Atlanta, GA 30341, USA.

Applications may not be submitted electronically at this time.

## V. Application Review Information

*V.1. Criteria:* You are required to provide measures of effectiveness that will demonstrate the accomplishment of the various identified objectives of the cooperative agreement. Measures of effectiveness must relate to the performance goals stated in the ''Purpose'' section of this announcement. Measures must be objective and quantitative, and must measure the intended outcome. These measures of effectiveness must be submitted with the application and will be an element of evaluation. These should be included in your project narrative under ''Goals.''

Your application will be evaluated against the following criteria:

*1. Current capability: 55 Points*

(a) Infrastructure/Experience—Does the applicant have the resources as well as demonstrated experience necessary to develop blood center infrastructure, including buildings, equipment, and supplies?

(b) Blood collection—Does the applicant have the resources to develop blood collection facilities and blood donor recruitment networks?

(c) Testing—Does the applicant have the resources to develop blood transfusion testing laboratories, including standard operating procedures protocols?

(d) Transfusion and Blood Utilization—Does the applicant have the resources to develop blood transfusion practice guidelines and a blood utilization review program?

(e) Training—Does the applicant have the resources to develop a comprehensive training program in the basic principles and practices of blood banking and transfusion medicine?

(f) Monitoring and evaluation—Is there a monitoring and evaluation plan in place? Does the plan measure important indicators?

(g) Management and Administration—Does the applicant have the resources to

manage and administer a national blood transfusion system?

*2. Feasibility of Plan: 35 Points*

(a) Infrastructure—Is the plan to develop blood center infrastructure sound and reasonable?

(b) Blood collection—Is the plan to develop blood collection facilities, including the development of blood donor recruitment networks, reasonable?

(c) Testing—Is the plan to develop blood transfusion testing laboratories, including standard operating procedures and protocols, reasonable?

(d) Transfusion and Blood Utilization—Does the applicant's plan to develop blood transfusion practice guidelines and a blood utilization review program seem reasonable?

(e) Training—Does the applicant have the resources and a reasonable plan to develop a comprehensive training program in the basic principles and practices of blood banking and transfusion medicine?

(f) Monitoring and evaluation—Is the monitoring and evaluation plan feasible? Does the plan measure important indicators?

(g) Sustainability—Is the plan for sustainability reasonable and feasible?

*3. Measures of Effectiveness: 10 Total*

Do the measures of effectiveness address the number of blood units tested safe for transfusion-transmitted diseases and the number of persons receiving safe transfusions?

*V.2. Review and Selection Process:* Applications will be reviewed for completeness by the Procurement and Grants Office (PGO) staff, and for responsiveness by the National Center for HIV, STD, and TB Prevention. Incomplete applications and applications that are non-responsive to the eligibility criteria will not advance through the review process. Applicants will be notified that their application did not meet submission requirements.

An interagency objective review panel will evaluate complete and responsive applications according to the criteria listed in the ''V.1. Criteria'' section above.

In addition, the following factors may affect the funding decision:

- Geographic distribution
- Percentage of staff who are citizens of the country in which services will be provided.

*V.3. Anticipated Announcement and Award Dates:*

*Award Date:* March 25,2004.

**VI. Award Administration Information**

*VI.1. Award Notices:* Successful applicants will receive a Notice of Grant Award (NGA) from the USG Procurement and Grants Office. The NGA shall be the only binding, authorizing document between the recipient and USG. The NGA will be signed by an authorized Grants Management Officer, and mailed to the recipient fiscal officer identified in the application.

Unsuccessful applicants will receive notification of the results of the application review by mail.

*VI.2. Administrative and National Policy Requirements:* 45 CFR part 74 and part 92.

For more information on the Code of Federal Regulations, see the National Archives and Records Administration at the following Internet address: *http://www.access.gpo.gov/nara/cfr/cfr-table-search.html.*

*The following additional requirements apply to this project:*

- AR–4 HIV/AIDS Confidentiality Provisions.
- AR–5 HIV Program Review Panel Requirements.
- AR–6 Patient Care.
- AR–9 Paperwork Reduction Act Requirements.
- AR–10 Smoke-Free Workplace Requirements.
- AR–11 Healthy People 2010.
- AR–12 Lobbying Restrictions.
- AR–14 Accounting System Requirements.
- AR–16 Security Clearance Requirement.
- AR–23 States and Faith-Based Organizations.
- AR–24 Health Insurance Portability and Accountability Act Requirements.
- AR–25 Release and Sharing of Data.

Additional information on these requirements can be found on the CDC web site at the following Internet address: *http://www.cdc.gov/od/pgo/funding/ARs.htm.*

*Reporting Requirements:* You must provide CDC with a hard copy original, plus two copies of the following reports:

1. Interim progress report, no less than 90 days before the end of the budget period The progress report will serve as your non-competing continuation application, and must contain the following elements:

(a) Current Budget Period Activities Objectives.

(b) Current Budget Period Financial Progress.

(c) New Budget Period Program Proposed Activity Objectives.

(d) Detailed Line-Item Budget and Justification.

(e) Additional Requested Information.

2. Semi-annual progress report, due 7 months after the beginning of each budget period. This report should contain the following elements:

(a) Progress on achieving objectives

(b) Modification or new activities

3. Financial status report, no more than 90 days after the end of the budget period.

4. Final financial and performance reports, no more than 90 days after the end of the project period.

These reports must be sent to the Grants Management Specialist listed in the ''Agency Contacts'' section of this announcement.

**VII. Agency Contacts**

For general questions about this announcement, contact: Technical Information Management Section, CDC Procurement and Grants Office, 2920 Brandywine Road, Atlanta, GA 30341, Telephone: (770) 488–2700.

For program technical assistance, contact: Kenneth Clark, M.D., MPH, Project Officer, National Center for HIV, STD, and TN Prevention, Centers for Disease Control and Prevention, 1600 Clifton Rd, NE, MS E04, Atlanta, GA 30333, Telephone: (404) 639–8057, E-mail: *kjc4@cdc.gov.*

For budget assistance, contact: Shirley Wynn, Contract Specialist, CDC Procurement and Grants Office, 2920 Brandywine Road, Atlanta, GA 30341, Telephone: (770) 488–1515, E-mail: *zbx6@cdc.gov.*

Dated: November 25, 2003.

**Edward Schultz,**

*Acting Director, Procurement and Grants Office, Centers for Disease Control and Prevention.*

[FR Doc. 03–29891 Filed 11–28–03; 8:45 am]

BILLING CODE 4163–18–P

---

## DEPARTMENT OF HEALTH AND HUMAN SERVICES

### Centers for Disease Control and Prevention

### Providing Technical Assistance Support for the Rapid Strengthening of Blood Transfusion Services in Selected Countries in Africa and the Caribbean Under the President's Emergency Plan for AIDS Relief

*Announcement Type:* New, Cooperative Agreement.

*Funding Opportunity Number:* 04078.

*Catalog of Federal Domestic Assistance Number:* 93.943.

*Key Dates*

- Application Deadline: March 1, 2004.

*Executive Summary:* An important aspect of President Bush's Emergency Plan for AIDS Relief plan is to provide

assistance to ensure a safe and adequate blood supply. The focus of this initiative is 14 countries in Africa and the Caribbean that are heavily affected by HIV/AIDS: Botswana, Côte d'Ivoire, Ethiopia, Haiti, Guyana, Kenya, Mozambique, Namibia, Nigeria, Rwanda, South Africa, Tanzania, Uganda, and Zambia. The purpose of this announcement is to provide expert guidance and technical assistance to the Ministries of Health or the National Transfusion Services in the 14 targeted countries as they rapidly develop and implement a national safe blood program with demonstrable results within the first year of the Emergency Plan. An additional intent is to develop sustained indigenous capacity to continue these programs after the project ends.

## I. Funding Opportunity Description

**Authority:** This program is authorized under section 301(a) and 307 of the Public Health Service Act, [42 U.S.C. 241(a) and 242l] as amended and under Public Law 108–25 (United States Leadership Against HIV/AIDS, Tuberculosis and Malaria Act of 2003) [22 U.S.C. 7601].

*Purpose:* President Bush's Emergency Plan for AIDS Relief has called for immediate action to turn the tide of HIV/AIDS in Africa and the Caribbean, to prevent at least seven million HIV infections within five years. An important aspect of the President's plan is to provide assistance to ensure a safe and adequate blood supply. The focus of this initiative is 14 countries in Africa and the Caribbean heavily affected by HIV/AIDS: Botswana, Côte d'Ivoire, Ethiopia, Haiti, Guyana, Kenya, Mozambique, Namibia, Nigeria, Rwanda, South Africa, Tanzania, Uganda, and Zambia. The World Health Organization (WHO) estimates that five to ten percent of all HIV transmissions are attributable to unsafe blood transfusions. Transmission of HIV and other blood-borne pathogens via blood transfusion is preventable by establishing an adequate supply of safe blood through a systematized blood transfusion service and minimizing unnecessary transfusions. However, according to WHO, among blood donations in Africa in 2002, only 90 percent were screened for HIV, 55 percent for Hepatitis B virus, and only 40 percent for Hepatitis C virus.

The rapid implementation of safe blood programs and precautions against medical transmission of HIV is a priority area for the President's plan. The overall goal is to develop and implement a national safe blood program with demonstrable results within the first year of the Emergency Plan. The purpose of this announcement is to provide support to organizations able to offer expert guidance and technical assistance to Ministries of Health and the National Transfusion Services in the 14 targeted countries on the development and implementation of a national safe blood program.

Measurable outcomes of this program will be in alignment with the following performance goal for President Bush's Emergency Plan for AIDS Relief: Prevent 7 million new HIV infections. The initiative will involve large-scale prevention efforts, including the rapid establishment and strengthening of safe blood transfusion services.

This initiative is a coordinated effort led by the Office of the Global AIDS Coordinator at the Department of State and involves various U.S. Federal Government agencies, including, the Department of State, the Department of Health and Human Services (HHS), the Department of Defense, and the U.S. Agency for International Development.

*Activities*

Awardee activities for this program are as follows: The provision of expert guidance and technical assistance to Ministries of Health or the Government's National Transfusion Services in the 14 targeted countries: Botswana, Côte d'Ivoire, Ethiopia, Haiti, Guyana, Kenya, Mozambique, Namibia, Nigeria, Rwanda, South Africa, Tanzania, Uganda, and Zambia. Awardees must carry out activities with Ministries of Health or the National Transfusion Services in multiple countries. Ministries of Health or the National Transfusion Services will be responsible for the actual implementation of the blood safety programs, including management, operations, and monitoring.

Specifically, the awardee(s) will provide expert guidance and technical assistance in the following areas:

- *Infrastructure*—Assist in assessing current infrastructure needs for a national, regionalized blood transfusion system, including regional blood collection and processing facilities, laboratory testing equipment and supplies. Advise in the strengthening of regional blood collection facilities in major urban areas, preferably near major health care facilities. Advise in the provision of standard laboratory equipment and reagents to regional blood collection facilities to test blood for transfusion-transmitted infections and to perform blood grouping and cross matching.
- *Blood collection*—Develop generic and site-specific protocols for obtaining, handling and storing, transporting, and distributing blood for use in blood collection facilities. Assist in developing and maintaining a network of blood donor recruiters and blood donor counselors to operate from each regional center. Assist in developing and maintainaing a system to identify a network of low risk and repeat blood donors. Guide in the management of blood collection facilities that have the capacity to obtain, handle and store blood safely with good recordkeeping. Implement effective quality assurance procedures for collecting and storing blood.
- *Testing*—Develop generic national and site-specific protocols for testing blood for HIV, hepatitis and syphilis. Manage blood testing facilities, ensuring good recordkeeping. Implement effective quality assurance procedures for testing blood.
- *Transfusion and Blood Utilization*—Develop and implement national guidelines for the appropriate use of blood and blood products, nationally and regionally. Develop blood utilization review and quality assurance systems for blood usage.
- *Training*—Develop and provide training programs and continuing education programs for health care professionals involved with blood transfusion services, such as physicians, nurses, physician assistants, community health aides, counselors, and laboratory technicians in the fields of blood donor recruitment and blood collection. Develop and provide training programs and continuing education programs for physicians and laboratory technicians in basic principles and practice of blood banking and transfusion medicine. Develop educational programs for health care providers, nurses and the general public on safe transfusion practices, including reducing the demand for unnecessary transfusions and recognizing community norms in practices regarding blood transfusions.
- *Monitoring and Evaluation*—Implement a system for reviewing and adjusting program activities based on monitoring information. Measure clinical outcomes to assess the impact of the program.

Funding will be provided to initiate new programs or expand existing programs (*e.g.*, expanding from one region to other regions of the same country) that include the above compounds.

In a cooperative agreement, HHS/CDC staff is substantially involved in the program activities, above and beyond routine grant monitoring. HHS will work under the guidance and supervision of the Office of the Global

AIDS Coordinator at the Department of State.

HHS/CDC Activities for this program are as follows:

- Provide scientific and technical assistance in refining the operational plan.
- Provide ongoing technical assistance in addressing problems encountered in implementing your plan.
- Assist in assessing program operations and in evaluating overall effectiveness of your program.
- Staff in both headquarters (HHS/CDC Atlanta and HHS/CDC in country) and in the designated countries will assure that other related U.S. Government (USG) activities are well coordinated with National Programs in each country.

## II. Award Information

*Type of Award:* Cooperative Agreement. HHS/CDC involvement in this program is listed in the Activities Section above.

*Fiscal Year Funds:* FY 2004.

*Approximate Total Funding:* $10 million.

*Approximate Number of Awards:* 3.

*Approximate Average Award:* $5 million.

*Floor of Award Range:* $500 thousand.

*Ceiling of Award Range:* $10 million.

*Anticipated Award Date:* March 25, 2004.

*Budget Period Length:* 12 months.

*Project Period Length:* 5 years.

Throughout the project period, HHS/CDC's commitment to continuation of awards will be conditioned on the availability of funds, evidence of satisfactory progress by the recipient (as documented in required and certified technically acceptable semi-annual program and financial reports), and the determination that continued funding is in the best interest of the U.S. Government.

## III. Eligibility Information

*III.1. Eligible applicants:* Applications may be submitted by foreign and domestic public and private organizations, such as:

- Public nonprofit organizations.
- Private nonprofit organizations.
- Universities.
- Faith-based organizations.

*III.2. Cost Sharing or Matching:* Matching funds are not required for this program.

*III.3. Other Eligibility Requirements:* If your application is incomplete or non-responsive to the requirements listed below, it will not be entered into the review process. You will be notified that your application did not meet the submission requirements

Provide written evidence, including letters of recommendation from entities you have worked with in the past, that your organization has experience providing services in all of the following areas for at least five years:

- Managing, operating or organizing national or regional blood centers, blood banks, blood bank testing laboratories, or blood banking professional organizations.
- Developing or operating national, regional or university educational and training programs in blood banking and blood transfusion practice for blood bank professionals.
- Developing or implementing guidelines or standards, including quality assurance, for blood collection centers, blood bank testing laboratories or transfusion services.
- Developing or operating blood donor recruitment networks and training blood donor recruitment staff, or developing standards or guidelines for these activities.

If you request a funding amount greater than the upper threshold, your application will not be eligible for review. You will be notified that you did not meet the submission requirements.

**Note:** Title 2 of the United States Code section 1611 states that an organization described in section 501(c)(4) of the Internal Revenue Code that engages in lobbying activities is not eligible to receive Federal funds constituting an award, grant, or loan.

## IV. Application and Submission Information

*IV.1. Address to Request Application Package:* To apply for this funding opportunity use application form PHS 5161. Forms are available on the USG Web site, at the following Internet address: *http://www.cdc.gov/od/pgo/forminfo.htm.*

If you do not have access to the Internet, or if you have difficulty accessing the forms on-line, you may contact the USG Procurement and Grants Office Technical Information Management Section (PGO–TIM) staff at: 770–488–2700. Application forms can be mailed to you.

*IV.2. Content and Form of Application Submission:* This program announcement is the definitive guide on application format, content, and deadlines. It supersedes information provided in the application instructions. If there are discrepancies between the application form instructions and the program announcement, adhere to the guidance in the program announcement.

You are required to have a Dun and Bradstreet Data Universal Numbering System (DUNS) number to apply for a grant or cooperative agreement from the Federal government. The DUNS number is a nine-digit identification number, which uniquely identifies business entities. Obtaining a DUNS number is easy and there is no charge. To obtain a DUNS number, access *http://www.dunandbradstreet.com* or call 1–866–705–5711. For more information, see the USG Web site at: *http://www.cdc.gov/od/pgo/funding/pubcommt.htm.*

If your application form does not have a DUNS number field, please write your DUNS number at the top of the first page of your application, and/or include your DUNS number in your application cover letter.

You must submit a signed original and two copies of your application forms.

You must include a project narrative with your application forms. Your narrative must be submitted in the following format:

- Maximum number of pages: 30 (**Note:** eligibility and budget narrative are not included in the page total). If your narrative exceeds the page limit, only the first pages which are within the page limit will be reviewed.
- Font size: 12 point unreduced
- Paper size: 8.5 by 11 inches
- Page margin size: 1″—top, bottom, right, and left
- Printed only on one side of page
- Held together only by rubber bands or metal clips; not bound in any other way.
- Written in English, avoid jargon.

Your narrative should address activities to be conducted over the entire project period, and must include the following items in the order listed:

*A. Need (3 Pages Maximum)*

Describe the need for services in the country or regions in which you intend to provide blood transfusion safety services. Address the following:

1. Need for technical assistance and guidance in the designated countries for all activities.
2. Need for blood safety education and training activities for physicians, nurses, laboratory technologists, managers, and donor recruiters.

*B. Current Blood Bank and Transfusion Service Activities (9 Pages Maximum)*

Describe the blood transfusion system activities for the regions in which you plan to provide blood transfusion safety services. Address the following:

1. *Infrastructure*—Describe your organization's ability to work with and advise the Ministries of Health and/or National Blood Transfusion Services in the designated countries with guidance

on the design and organization of regional blood collection centers, laboratory testing equipment, and standard operating procedures.

2. *Blood Collection*—Describe your ability to guide the development of protocols and standards for collecting, handling and distributing units of blood. Describe your organization's scope of work in blood donor recruitment and counseling activities. Describe your organization's work in the management of blood collection facilities, record-keeping, and quality assurance activities. Describe your organization's activities in blood donor recruitment, selection and counseling.

3. *Testing*—Describe your organization's role in blood transfusion safety laboratory testing and in promoting standard operating procedures and quality assurance systems for blood transfusion services and testing laboratories.

4. *Transfusion and Blood Utilization*—Describe your organization's role in the development of or use of guidelines or standards for blood transfusion therapy and efforts or systems for blood utilization review and the reduction of unnecessary blood transfusions.

5. *Training Activities*—Describe current training programs for blood transfusion safety for physicians, laboratory technologists, donor recruiters, and nurses. Include information about course titles, types and numbers of persons trained, length of each course, training facilities, and the trainers.

6. *Monitoring and Evaluation*—Describe your organization's use of program indicators and monitoring and evaluation tools in measuring quality of blood transfusion services such as the monthly number of units of safe blood made available, the number of persons receiving safe blood each month, the blood supply deficit, and the number of persons with serious adverse consequences to transfusions.

7. Describe your organization's experience with providing technical assistance related to the areas listed above. Comment on any experience providing technical assistance in other countries.

*C. Goals (4 Pages Maximum)*

Address the following:

1. Provide goals, objectives, and timeline for implementation of the program plan.

2. Provide measures of effectiveness by which you can assess the success of the program.

3. Provide letters of support from organizations with which you intend to work. These letters should indicate support for the goals and objectives of your proposed project and indicate what support they will provide, *e.g.*, referrals to your program.

*D. Rapid Expansion of Blood Transfusion Safety Services (8 Pages Maximum)*

Describe your plans for increasing the quality and extent of safe blood transfusion services. Describe your plans for increasing the number of units of safe blood available for transfusion and plans for reducing unnecessary transfusions. Address the following areas:

1. *Infrastructure*—Indicate for which countries you intend to provide assistance. Describe your plans to assist the designated countries in assessing and expanding the current blood transfusion system infrastructure, including regional blood collection facilities, laboratory testing equipment, and supplies.

2. *Blood Collection*—Describe your plans for assisting countries in expanding the current systems for collecting, handling, and distributing units of blood. Describe your plans for the expansion of blood donor recruitment and counseling activities. Describe your plans for assisting the designated countries with the development of blood collection facilities management, record-keeping, and quality assurance activities. Describe your planned activities to assist with the promotion of blood donor community mobilization in the proposed areas.

3. *Testing*—Describe your plans to advise and guide the designated countries in expanding their current systems of testing blood for HIV, hepatitis, and syphilis. Describe plans to help implement or expand current standard operating procedures and quality assurance procedures.

4. *Transfusion and Blood Utilization*—Describe plans to help the designated countries implement the use of national or regional guidelines for blood transfusion therapy and efforts or systems for blood utilization review and the reduction of unnecessary blood transfusions.

5. *Training Activities*—Describe proposed training programs for blood transfusion safety for physicians, laboratory technologists, donor recruiters and nurses. Include information about proposed fellowships, training courses, types and numbers of persons to be trained, and length of each course. Describe the number of potential faculty and trainers and their qualifications and experience.

6. *Monitoring and Evaluation*—Describe the proposed system to use important program indicators such as the monthly number of units of safe blood made available, the number of persons receiving safe blood each month, the blood supply deficit, and the number of persons with serious adverse consequences to transfusions.

7. *Sustainability*—Applicants should develop a one-page description of capacity building activities for each year's work plan. Proposed activities must include capacity building as defined as activities promoting host country infrastructure development and strengthening of management, service delivery, and evaluation systems and clinical/cultural competency.

In order to accomplish sustainable systems development the following activities are suggested:

- Identify key stakeholders and engage potential in-country partners;
- Develop or expand a formal (preferably host country) advisory group to plan for on-going services;
- Define the components of care with other health or social service providers;
- Research funding sources; and
- Develop an exit plan.

The overall strategy and program must fit into National host country strategies including continuation of the program funding and staffing.

*E. Management Plan, Staffing, and Infrastructure (6 Pages Maximum)*

Address the following:

1. *Management Plan*—Provide an organizational chart and describe the responsibilities for each of the key staff.

2. *Staffing*—Describe the number and types of staff needed to assist with technical guidance and training activities.

3. *Infrastructure*—Describe the physical facilities in which the proposed activities will be carried out and the equipment needed.

4. *Human Resources, Management and Administration*—Describe plans to provide or obtain all material and human resources necessary for the development, implementation, management, operation, monitoring, and quality assurance of all technical assistance program activities.

5. *Coordination with National Programs*—Describe the organization's strategy to coordinate proposed activities within the context of national programs.

*F. Budget Narrative (No Page Limit)*

Guidance for completing your budget can be found on the USG Web site, at the following address: *http://www.cdc.gov/od/pgo/funding/budgetguide.htm.*

Additional information may be included in the application appendices. The appendices will not be counted toward the narrative page limit. This additional information includes: Curriculum Vitae, Resumes, Organizational Charts, Letters of Support, and other pertinent documents.

IV.3. Submission Dates and Times: Application Deadline Date: March 1, 2004.

*Explanation of Deadlines:* Applications must be received in the CDC Procurement and Grants Office by 4 p.m. Eastern Time on the deadline date. If you send your application by the United States Postal Service or commercial delivery service, you must ensure that the carrier will be able to guarantee delivery of the application by the closing date and time. If CDC receives your application after closing due to: (1) Carrier error, when the carrier accepted the package with a guarantee for delivery by the closing date and time, or (2) significant weather delays or natural disasters, you will be given the opportunity to submit documentation of the carriers guarantee. If the documentation verifies a carrier problem, CDC will consider the application as having been received by the deadline.

This program announcement is the definitive guide on application format, content, and deadlines. It supersedes information provided in the application instructions. If your application does not meet the deadline above, it will not be eligible for review, and will be discarded. You will be notified that your application did not meet the submission requirements.

CDC will not notify you upon receipt of your application. If you have a question about the receipt of your application, first contact your courier. If you still have a question, contact the PGO–TIM staff at: 770–488–2700. Before calling, please wait two to three days after the application deadline. This will allow time for applications to be processed and logged.

*IV.4. Intergovernmental Review of Applications:* Executive Order 12372 does not apply to this program.

*IV.5. Funding restrictions:* Funding restrictions, which must be taken into account while writing your budget are as follows:

- Funds may be used only for activities associated with strengthening blood transfusion services. USG funds may be used for direct costs such as salaries; necessary travel; operating costs, including supplies, fuel, utilities, *etc.;* staff training costs, including registration fees and purchase and rental of training related equipment; and purchase of HIV testing reagents, test kits, and laboratory equipment for HIV testing.
- No funds appropriated under this solicitation shall be used to carry out any program of distributing sterile needles or syringes for the hypodermic use of any illegal drug.
- No funds made available under this solicitation may be used to provide assistance to any group or organization that does not have a policy explicitly opposing prostitution and sex trafficking. This written statement of certification must be signed by authorized person(s) within the applicant group or organization, including the individuals submitting the application. No funds made available under this solicitation may be used to promote or advocated the legalization or practice of prostitution or sex trafficking. Nothing in the preceding two sentences shall be construed to preclude the provision to individuals of palliative care, treatment, or post-exposure pharmaceutical prophylaxis, and necessary pharmaceuticals and other commodities, including test kits, condoms, and, when proven effective, microbicides.
- Applicants may contract with other organizations under this program; however, the applicant must perform a substantial portion of the activities (including program management and operations, and delivery of services for which funds are requested).
- The costs that are generally allowable in grants to domestic organizations are allowable to foreign institutions and international organizations, with the following exception: With the exception of American University, Beirut and the World Health Organization, indirect costs will not be paid (either directly or through a sub-award) to organizations located outside the territorial limits of the United States or to international organizations regardless of their location.
- All requests for funds contained in the budget shall be stated in U.S. dollars. Once an award is made, USG will not compensate foreign grantees for currency exchange fluctuations through the issuance of supplemental awards.
- A fiscal Recipient Capability assessment may be required, prior to or post award, in order to review the applicant's business management and fiscal capabilities regarding the handling of U.S. Federal funds.
- You must obtain an annual audit of these USG funds (program-specific audit) by a U.S.-based audit firm with international branches and current licensure/authority in-country, and in accordance with International Accounting Standards or equivalent standard(s) approved in writing by USG.

*IV. 6. Other Submission Requirements:* Application Submission Address: Submit your application by mail or express delivery service to: Technical Information Management—PA#04078, CDC Procurement and Grants Office, 2920 Brandywine Road, Atlanta, GA 30341, USA.

Applications may not be submitted electronically at this time.

## V. Application Review Information

*V.1. Criteria:* You are required to provide measures of effectiveness that will demonstrate the accomplishment of the various identified objectives of the cooperative agreement. Measures of effectiveness must relate to the performance goals stated in the ''Purpose'' section of this announcement. Measures must be objective and quantitative, and must measure the intended outcome. These measures of effectiveness must be submitted with the application and will be an element of evaluation. These should be included in your project narrative under ''Goals.''

Your application will be evaluated against the following criteria:

*1. Current Capability: 45 Points*

(a) Infrastructure—Does the applicant have the resources to guide or assist in the development of blood center infrastructure, including buildings, equipment, and supplies?

(b) Blood collection—Does the applicant have the resources to guide or assist in the development of blood collection facilities, including the development of blood donor recruitment networks?

(c) Testing—Does the applicant have the resources to guide or assist in the development of blood transfusion testing laboratories, including standard operating procedures and protocols?

(d) Transfusion and Blood Utilization—Does the applicant have the resources to develop or assist in the development of blood transfusion practice guidelines and a blood utilization review programs?

(e) Training—Does the applicant have the resources to develop or guide in the development of a comprehensive training program in the basic principles and practices of blood banking and transfusion medicine?

(f) Monitoring and evaluation—Does the applicant have a monitoring and evaluation plan? Does the plan measure important indicators?

*2. Feasibility of Plan: 35 Points*

(a) Infrastructure—Is the plan to guide or assist in the development of blood center infrastructure sound and reasonable?

(b) Blood collection—Is the plan to guide or assist in the development of blood collection facilities, including the development of blood donor recruitment networks, reasonable?

(c) Testing—Is the plan to guide or assist in the development of blood transfusion testing laboratories, including standard operating procedures and protocols, reasonable?

(d) Transfusion and Blood Utilization—Does the applicant's plan to develop or assist in the development of blood transfusion practice guidelines and a blood utilization review programs seem reasonable?

(e) Training—Does the applicant have the resources and a reasonable plan to develop, or guide the development of, a comprehensive training program in the basic principles and practices of blood banking and transfusion medicine?

(f) Monitoring and evaluation—Is the monitoring and evaluation plan feasible? Does the plan measure important indicators?

(g) Sustainability—Is the plan for sustainability reasonable and feasible?

*3. Measures of Effectiveness: 10 Points*

Do the measures of effectiveness address the number of blood units tested safe for transfusion-transmitted diseases and the number of persons receiving safe transfusions?

*4. Plans for Collaboration: 10 Points*

Is there a plan or strategy for effectively collaborating with the Ministries of Health or National Transfusion Services funded under CDC Program Announcement 04077?

*V.2. Review and Selection Process:* Applications will be reviewed for completeness by the Procurement and Grants Office (PGO) staff, and for responsiveness by the National Center for HIV, STD, and TB Prevention. Incomplete applications and applications that are non-responsive to the eligibility criteria will not advance through the review process. Applicants will be notified that their application did not meet submission requirements.

An interagency objective review panel will evaluate your application according to the criteria listed in section ''V.1. Criteria'' above.

In addition, the following factors may affect the funding decision:

- Geographic distribution.
- Percentage of staff who are citizens of the country in which services will be provided.

*V.3. Anticipated Announcement and Award Dates:* Award Date: March 25, 2004.

**VI. Award Administration Information**

*Award Notices:* Successful applicants will receive a Notice of Grant Award (NGA) from the USG Procurement and Grants Office. The NGA shall be the only binding, authorizing document between the recipient and USG. The NGA will be signed by an authorized Grants Management Officer, and mailed to the recipient fiscal officer identified in the application.

*Administrative and National Policy Requirements:* 45 CFR part 74 and part 92.

For more information on the Code of Federal Regulations, see the National Archives and Records Administration at the following Internet address: *http://www.access.gpo.gov/nara/cfr/cfr-table-search.html.*

The following additional requirements apply to this project:

- AR–4 HIV/AIDS Confidentiality Provisions
- AR–5 HIV Program Review Panel Requirements
- AR–6 Patient Care
- AR–9 Paperwork Reduction Act Requirements
- AR–10 Smoke-Free Workplace Requirements
- AR–11 Healthy People 2010
- AR–12 Lobbying Restrictions
- AR–14 Accounting System Requirements
- AR–16 Security Clearance Requirement
- AR–23 States and Faith-Based Organizations
- AR–24 Health Insurance Portability and Accountability Act Requirements
- AR–25 Release and Sharing of Data

Additional information on these requirements can be found on the CDC Web site at the following Internet address: *http://www.cdc.gov/od/pgo/funding/ARs.htm.*

*Reporting Requirements*

You must provide CDC with a hardcopy original, plus two copies of the following reports:

1. Interim progress report, no less than 90 days before the end of the budget period. The progress report will serve as your non-competing continuation application, and must contain the following elements:

(a) Current Budget Period Activities Objectives.

(b) Current Budget Period Financial Progress.

(c) New Budget Period Program Proposed Activity Objectives.

(d) Detailed Line-Item Budget and Justification.

(e) Additional Requested Information.

2. Semi-annual progress report, due 7 months after the beginning of each budget period. This report should contain the following elements:

(a) Progress on achieving objectives

(b) Modification or new activities

3. Financial status report, no more than 90 days after the end of the budget period.

4. Final financial and performance reports, no more than 90 days after the end of the project period.

These reports must be mailed to the Grants Management Specialist listed in the ''Agency Contacts'' section of this announcement.

**VII. Agency Contacts**

For general questions about this announcement, contact: Technical Information Management Section, CDC Procurement and Grants Office, 2920 Brandywine Road, Atlanta, GA 30341, Telephone: 770–488–2700.

For program technical assistance, contact: Kenneth Clark, M.D., MPH, Project Officer, National Center for HIV, STD, and TN Prevention, Centers for Disease Control and Prevention, 1600 Clifton Rd, NE, MS E04, Atlanta, GA 30333, Telephone: 404–639–8057, E-mail: *kjc4@cdc.gov.*

For budget assistance, contact: Shirley Wynn, Contract Specialist, CDC Procurement and Grants Office, 2920 Brandywine Road, Atlanta, GA 30341, Telephone: 770–488–1515, E-mail: *zbx6@cdc.gov.*

Dated: November 25, 2003.

**Edward Schultz,**

*Acting Director, Procurement and Grants Office, Centers for Disease Control and Prevention.*

[FR Doc. 03–29892 Filed 11–28–03; 8:45 am]

BILLING CODE 4163–18–P

---

## DEPARTMENT OF HEALTH AND HUMAN SERVICES

### Centers for Disease Control and Prevention

### Health Resources and Services Administration

### Rapid Expansion of Antiretroviral Therapy Programs for HIV-Infected Persons in Selected Countries in Africa and the Caribbean Under the President's Emergency Plan for AIDS Relief

*Announcement Type:* New.

*Funding Opportunity Number:* 04080.

*Catalog of Federal Domestic Assistance Number:* 93.941.

*Key Dates: Application Deadline:* December 31, 2003.

## I. Funding Opportunity Description

**Authority:** This program is authorized under section 301(a) and 307 of the Public Health Service Act, [42 U.S.C. 241(a) and 242l] as amended and under Public Law 108–25 (United States Leadership Against HIV/AIDS, Tuberculosis and Malaria Act of 2003) [22 U.S.C. 7601].

*Purpose:* President Bush's Emergency Plan for AIDS Relief has called for immediate action to turn the tide of HIV/AIDS in Africa and the Caribbean. An important aspect of the President's bold vision is to treat at least two million HIV-infected persons with combination antiretroviral therapy (ART) within five years. This funding opportunity responds to the President's call for rapid, accountable, and sustainable action.

The primary purpose of this funding announcement is to rapidly expand ART for low-income HIV-infected persons. An additional intent is to develop sustainable indigenous capacity to continue these programs after the project ends. Funds will be awarded to organizations with excellent HIV programs that currently provide care or care and ART. Services should be delivered in a manner that is consistent with national plans and policies. The following countries are eligible: Botswana, Côte d'Ivoire, Ethiopia, Guyana, Haiti, Kenya, Mozambique, Namibia, Nigeria, Rwanda, South Africa, Tanzania, Uganda, Zambia.

Measurable outcomes of this program will be in alignment with the following performance goal for President Bush's Emergency Plan for AIDS Relief: Treat two million HIV-infected people in 14 countries in Africa and the Caribbean heavily afflicted by AIDS (see above). CDC expects to work in close collaboration with the Health Resources Services Administration (HRSA) in supporting awardee activities under this cooperative agreement.

This initiative is a coordinated effort led by the Office of the Global AIDS Coordinator at the Department of State and involves various U.S. Federal Government agencies including the Department of State, Department of Health and Human Services (HHS), Department of Defense and the U.S. Agency for International Development.

### Activities

The recipient must manage a program to support all of the following activities in the countries in which they currently meet eligibility requirements. Awardee activities for this program are as follows:

Clinical Care

a. Diagnose HIV infection correctly.

b. Provide comprehensive care including appropriate prophylaxis and treatment for opportunistic infections (OI) including tuberculosis (TB) and sexually transmitted infections (STIs), according to national guidelines. If such guidelines do not exist, use World Health Organization (WHO) or other international guidelines.

c. Provide ART according to national guidelines and algorithms that cover when and how to initiate therapy, use first- and second-line regimens, and use regimens for special circumstances, such as pregnancy, co-infection with TB, and where appropriate, children.

d. Evaluate and manage adverse effects of drugs.

e. Maintain adequate clinical records.

f. Provide counseling and social support to ensure adherence to treatment regimens.

g. Provide referrals for additional care and support needs.

h. Provide monitoring and care for HIV-infected persons not yet eligible by medical criteria for ART.

Drug and Health Commodities Management

a. Select and procure appropriate drugs in the correct amounts in accordance with U.S. government policies and national and international law.

b. Develop and maintain ongoing quality assurance for secure and reliable storage and distribution systems, and prevent the diversion and theft of drugs and commodities.

c. Maintain record-keeping systems.

Laboratory Services

Ensure the availability and appropriate use of laboratory capabilities for diagnosing HIV infection, opportunistic infections, and other co-morbid events, and for appropriate evaluation of drug toxicities consistent with national guidelines. This includes access to: (1) Physical infrastructure; (2) trained staff; (3) equipment; (4) supplies and reagents; and (5) quality assurance.

Training

a. Assure training and continuing education to health care workers, such as doctors, nurses, clinical assistants, nurse practitioners, pharmacists, laboratory technicians, and community workers (including persons living with HIV/AIDS).

b. Training should address the diagnosis, treatment, and care of HIV.

c. Provide training to increase the capacity of indigenous staff.

d. Provide management training as needed.

Community Mobilization and Behavior Change

Limited funding in this award (no more than seven percent of the budget) is available for community mobilization and behavior change to promote the use of ART. These activities should include employment of people living with HIV/AIDS where appropriate. The specific goals of this activity include: (1) For those at risk of infection—encourage them to seek testing; (2) 2. For those not infected—reduce the risk of acquiring HIV and other STIs; and (3) For those infected—reduce the risk of HIV transmission and encourage care seeking behavior and adherence to therapy.

Monitoring and Evaluation

a. Implement a system for ongoing review and adjustment of program activities.

b. Measure uptake and clinical outcomes to assess impact, including monitoring for adverse outcomes, such as drug resistance at the population level in the populations being served.

c. Collect program indicators as recommended by national and United States Government (USG) guidelines, that have been or will be developed.

d. Assist in dissemination of evaluations and lessons learned from these programs.

In a cooperative agreement, HHS staff are substantially involved in the program activities, above and beyond routine grant monitoring. HHS will work under the guidance and supervision of the Office of the Global AIDS Coordinator at the Department of State.

CDC and HRSA Activities for this program are as follows:

a. Provide scientific and technical assistance in refining the plan.

b. Provide ongoing technical assistance in addressing problems encountered in implementing the plan, as well as for the delivery of an effective ARV treatment program through regular telecommunication and on-site support.

c. Assist in evaluating program operations and overall effectiveness of the program through the joint review of clinical operations and joint analysis of monitoring data.

d. Assist the awardees with sophisticated technical elements, such as ARV resistance monitoring, through direct support from CDC or by facilitating linkages with other national or international organizations.

## II. Award Information

*Type of Award:* Cooperative Agreement.

CDC involvement in this program, including technical collaboration with and support from HRSA, is listed in the Activities Section above.

*Fiscal Year Funds:* 2004.

*Approximate Total Funding:* $115 million.

*Approximate Number of Awards:* Five or six.

*Approximate Average Award:* $17 million.

*Floor of Award Range:* $7 million.

*Ceiling of Award Range:* $25 million.

*Anticipated Award Date:* January 15, 2004.

*Budget Period Length:* 12 months.

*Project Period Length:* 5 years.

Throughout the project period, HHS's commitment to continuation of awards will be conditioned on the availability of funds, evidence of satisfactory progress by the recipient (as documented in required reports), and the determination that continued funding is in the best interest of the Federal Government.

## III. Eligibility Information

### *III.1. Eligible Applicants*

Applications may be submitted by organizations that have experience in: (1) Directly providing clinical care for HIV-infected persons (including management of TB and other opportunistic infections, as well as clinical follow up), or directly providing such care plus treatment with ART, or (2) assisting in providing clinical care or care and treatment with ART through funding and technical assistance (need to show evidence of an operational presence in the countries your organization proposes to work). Eligible applicants must have provided these services for three or more years in at least three of the following countries: Botswana, Côte d'Ivoire, Ethiopia, Guyana, Haiti, Kenya, Mozambique, Namibia, Nigeria, Rwanda, South Africa, Tanzania, Uganda, and Zambia. Either United States (U.S.) or non U.S. organizations are eligible to apply.

No funds made available under this solicitation may be used to provide assistance to any group or organization that does not have a policy explicitly opposing prostitution and sex trafficking. This written statement of certification must be signed by authorized person(s) within the applicant group or organization, including the individuals submitting the application. No funds made available under this solicitation may be used to promote or advocate the legalization or practice of prostitution or sex trafficking. Nothing in the preceding sentences shall be construed to preclude the provision to individuals of palliative care, treatment, or post-exposure pharmaceutical prophylaxis, and necessary pharmaceuticals and other commodities, including test kits, condoms, and, when proven effective, microbicides.

### *III.2. Cost Sharing or Matching*

Matching funds are not required for this program.

### *III.3. Other*

If you request a funding amount greater than the ceiling of the award range, your application will be considered non-responsive and will not be entered into the review process. You will be notified that your application did not meet the submission requirements.

If your application is incomplete or non-responsive to the requirements listed in this section, it will not be entered into the review process. You will be notified that your application did not meet submission requirements.

**Note:** Title 2 of the United States Code section 1611 states that an organization described in section 501(c)(4) of the Internal Revenue Code that engages in lobbying activities is not eligible to receive Federal funds constituting an award, grant, or loan.

## IV. Application and Submission Information

### *IV.1. Address To Request Application Package*

To apply for this funding opportunity use application form CDC 1246. Application forms and instructions are available on the CDC web site, at the following Internet address: *www.cdc.gov/od/pgo/forminfo.htm.*

If you do not have access to the Internet, or if you have difficulty accessing the forms on-line, you may contact the CDC Procurement and Grants Office Technical Information Management Section (PGO–TIM) staff at: 770–488–2700. Application forms can be mailed to you.

### *IV.2. Content and Form of Submission*

You must include a project narrative with your application forms. Your narrative must be submitted in the following format:

- Maximum number of pages: 40 (Note: Eligibility and budget narrative are not included in the page total). If your narrative exceeds the page limit, only the first pages which are within the page limit will be reviewed.
- Single-spaced.
- Font size: 12-point unreduced.
- Paper size: 8.5 by 11 inches.
- Page margin size: One inch.
- Printed only on one side of page.
- Held together only by rubber bands or metal clips; not bound in any other way.
- Written in English.

Your narrative should address activities to be conducted over the entire project period, and must include the following items in the order listed:

1. Eligibility: No Page Limit

Provide evidence that your organization meets the eligibility requirements for this funding announcement. Examples could include a copy of an agreement between your organization and a host country institution, annual reports, or registration as an operating entity within the countries you propose to work.

This should be the first topic addressed in your program narrative. If you do not provide adequate documentation, your application will be deemed ineligible and will not be reviewed. If you need to include substantiating documents, include these in the appendix under a section titled ''Eligibility.''

2. Need: 2 Page Max

Describe the need for treatment services in the catchment areas in which you intend to provide ART. Address the following:

a. Estimated number of infected persons in the catchment area where you intend to provide ART.

b. Estimated number of infected persons receiving ART in your proposed catchment areas and the number of persons receiving ART through your organization (if any) and the number of facilities your organization supports to provide ART (if any).

c. Number of persons with whom you intend to initiate treatment with ART and the number of facilities in which you will provide ART for each year of the next five years.

d. Provide this information in a table format: for columns—base and years 1 through 5; for rows—number of infected persons (baseline only), number receiving ART (baseline only), number receiving ART through your program (baseline only), number of facilities where ART is being provided (baseline only), the number of persons your organization intends to initiate treatment with ART for each of the next five years, and the number of facilities for each year.

e. Describe your proposed patient population, including socioeconomic status and gender.

3. Current HIV Care and Treatment Services: 16 Pages Max

Address the following and describe whether your organization or partnering organizations is responsible for these activities (Include supporting documents in the appendix under the heading, ''Current HIV care and treatment services.''):

a. Clinical care—

(1) Current services—Describe the types of facilities in which you are currently providing services (*e.g.*, hospital, clinic), locations, relationship to government health services, and the types of HIV related care and treatment provided. Also indicate any fees for services.

(2) Describe your strategies for diagnosis, treatment and prophylaxis for opportunistic infections, including TB. Also describe laboratory and clinical follow-up.

(3) If your program is currently providing ART, describe the criteria for initiation and continuation of ART and first- and second-line ART regimens. Also describe laboratory and clinical follow up as well as strategies to promote adherence. Indicate whether these are consistent with national guidelines.

b. Drug and health commodities—Describe your system to select, procure, store, track, distribute, and provide pharmaceuticals to patients, and measures to prevent the theft and diversion of drugs and commodities. Indicate sources for procurement of pharmaceuticals and laboratory supplies.

c. Laboratory services—Describe the following:

(1) Laboratory facilities for diagnosis and treatment of HIV, STIs, and opportunistic infections such as TB;

(2) Capability of performing CD4 tests at each facility including type of equipment used;

(3) Staff qualifications;

(4) Quality assurance measures.

d. Training activities—Describe training programs for HIV care and treatment, including laboratory services. Include information about course titles, types and numbers of persons trained, length of each course, training facilities, follow-up activities, and trainer qualifications.

e. Community mobilization and behavior change—Describe your activities to promote HIV testing in the proposed catchment areas and to provide behavioral change counseling to persons the program tests for HIV.

f. Monitoring and evaluation—Describe your current system to record program indicators, including patient outcomes.

4. Goals and Objectives: 2 Page Max

Address the following:

a. Provide goals for your project and measures of effectiveness by which you can assess the success of your program. One of these measures must be the number of HIV-infected persons to whom you will be providing ART by the end of each year of the project.

b. Describe major activities to achieve project goals and a timeline for implementation of the project in the first year and a more general timeline for four years.

5. Rapid Expansion of ART: 14 Pages Max

Describe your plans for increasing the number of infected persons who receive ART. Address the following areas:

a. Clinical care—Explain how you plan to increase the number of persons receiving ART and maintain or improve the quality of care provided in three or more of the eligible countries. Include protocols you will use. Provide an estimate of annual per patient cost for HIV treatment based on your total budget. Describe your policy for charging fees to patients. Explain how the proposed program will strengthen the national network for providing ART and is consistent with Ministry of Health (MOH) expansion plans.

b. Drug and health commodities—Describe how you plan to expand the drug management system to ensure appropriate treatment of the projected number of persons on ART.

c. Laboratory services—Describe how you will increase your HIV-related services. If you plan to perform CD4 counts or viral load testing for initiating or monitoring ART, describe plans to develop this capacity or to collaborate with others to do so.

d. Training—Describe your training needs including the number and type of staff that need to be trained and how the training will be accomplished. Describe how your program will ensure that training of indigenous personnel will occur within 5 years.

e. Community mobilization and behavior change—Describe the methods you will use to increase the number of persons who seek HIV testing and the methods you will use to increase the number of persons to whom you provide counseling. Describe your efforts to support adherence to therapy.

f. Monitoring and Evaluation—Describe your proposed monitoring and evaluation plan, including a list of key indicators to track program performance.

g. Sustainability—Applicants should develop a one-page description of capacity building activities for each year's work plan. Proposed activities must include capacity building as defined as activities promoting host country infrastructure development and strengthening of management, service delivery, and evaluation systems and clinical/cultural competency.

In order to accomplish sustainable systems development the following activities are suggested:

- Identify key stakeholders and engage potential in-country partners;
- Develop or expand a formal (preferably host country) advisory group to plan for on-going services;
- Define the components of care with other health or social service providers;
- Research funding sources; and
- Develop an exit plan.

The overall strategy and program must fit into National host country strategies including continuation of the program funding and staffing.

6. Management Plan, Staffing, and infrastructure: 6 Pages Max

Address the following:

a. Collaborating Organizations

(1) Describe which organizations you will financially support under this cooperative agreement and the role each will play.

(2) List the organizations with whom you intend to collaborate and what role each will play.

(3) Provide letters of support from these organizations as well as the MOH. These letters should be included in the appendix under a section titled, ''Letters of Support.'' The letters should indicate support for the goals and objectives of your proposed project and indicate what support they will provide, *e.g.*, referrals to your program.

b. Management plan—Provide an organizational chart and describe the responsibilities of key staff.

c. Staffing—Describe number and types of staff needed to treat the projected number of persons with ART. Indicate what percentage of clinical and senior management are citizens of the country in which services will be provided. Describe plans to increase these percentages. Also describe the number and types of new staff that will need to be hired in each country.

d. Infrastructure—Describe the physical facilities where services will be provided and the equipment needed.

7. Budget Narrative: No Page Limit

Guidance for completing your budget can be found on the CDC Web site, at the following address: *http://www.cdc.gov/od/pgo/funding/budgetguide.htm*.

You are required to have a Dun and Bradstreet Data Universal Numbering System (DUNS) number to apply for a grant or cooperative agreement from the Federal government. The DUNS number is a nine-digit identification number, which uniquely identifies business entities. Obtaining a DUNS number is easy and there is no charge. To obtain a DUNS number, access *www.dunandbradstreet.com* or call 1–866–705–5711.

For more information, see the CDC Web site at: *http://www.cdc.gov/od/pgo/funding/pubcommt.htm.*

If your application form does not have a DUNS number field, please write your DUNS number at the top of the first page of your application, and/or include your DUNS number in your application cover letter.

Additional information may be included in the application appendices. The appendices will not be counted toward the narrative page limit. This additional information includes: Curriculum Vitae, Resumes, Organizational Charts, Letters of Support, and other pertinent documents.

Additional requirements that may require you to submit additional documentation with your application are listed in ''VI.2. Administrative and National Policy Requirements''.

*IV.3. Submission Dates and Times*

*Application Deadline Date:* December 31, 2003.

Explanation of Deadlines: Applications must be received in the CDC Procurement and Grants Office by 4 p.m. Eastern Time on the deadline date. If you send your application by the United States Postal Service or commercial delivery service, you must ensure that the carrier will be able to guarantee delivery of the application by the closing date and time. If CDC receives your application after closing due to: (1) Carrier error, when the carrier accepted the package with a guarantee for delivery by the closing date and time, or (2) significant weather delays or natural disasters, you will be given the opportunity to submit documentation of the carriers guarantee. If the documentation verifies a carrier problem, CDC will consider the application as having been received by the deadline.

This program announcement is the definitive guide on application format, content, and deadlines. It supersedes information provided in the application instructions. If your application does not meet the deadline above, it will not be eligible for review, and will be discarded. You will be notified that your application did not meet the submission requirements.

CDC will not notify you upon receipt of your application. If you have a question about the receipt of your application, first contact your courier. If you still have a question, contact the PGO–TIM staff at: 770–488–2700. Before calling, please wait two to three days after the application deadline. This will allow time for applications to be processed and logged.

*IV.4. Intergovernmental Review of Applications*

Executive Order 12372 does not apply to this program.

*IV.5. Funding Restrictions*

Funding restrictions, which must be taken into account while writing your budget are as follows:

1. Funds may be spent for reasonable program purposes, including personnel, travel, supplies, and services. Equipment may be purchased if deemed necessary to accomplish program objectives, however, prior approval by HHS/CDC officials must be requested in writing.

2. All requests for funds contained in the budget, shall be stated in U.S. dollars. Once an award is made, HHS/CDC will not compensate foreign grantees for currency exchange fluctuations through the issuance of supplemental awards.

3. The costs that are generally allowable in grants to domestic organizations are allowable to foreign institutions and international organizations, with the following exception: With the exception of the American University, Beirut, the Gorgas Memorial Institute, and the World Health Organization, Indirect Costs will not be paid (either directly or through sub-award) to organizations located outside the territorial limits of the United States or to international organizations regardless of their location.

4. The applicant may contract with other organizations under this program; however the applicant must perform a substantial portion of the activities (including program management and operations, and delivery of prevention services for which funds are required.)

5. You must obtain annual audit of these HHS/CDC funds (program-specific audit) by a U.S.-based audit firm with international branches and current licensure/authority in-country, and in accordance with International Accounting Standards or equivalent standard(s) approved in writing by HHS/CDC.

6. A fiscal Recipient Capability Assessment may be required, prior to or post award, in order to review the applicant's business management and fiscal capabilities regarding the handling of U.S. Federal funds.

7. Use of these funds for the purchase of antiretroviral drugs, laboratory reagents, and laboratory equipment for antiretroviral treatment projects requires prior approval in writing by HHS/CDC officials.

8. Funds may be used only for activities associated with HIV/AIDS. HHS/CDC funds may be used for direct costs such as salaries; necessary travel; operating costs, including supplies, fuel, utilities, etc.; staff training costs, including registration fees and purchase and rental of training-related equipment; renovation of clinical or lab facilities; and purchase of HIV testing reagents, test kits, and laboratory equipment for HIV testing.

9. No funds made available under this solicitation may be used to provide assistance to any group or organization that does not have a policy explicitly opposing prostitution and sex trafficking. This written statement of certification must be signed by authorized person(s) within the applicant group or organization including the individuals submitting the application. No funds made available under this solicitation may be used to promote or advocate the legalization or practice of prostitution or sex trafficking. Nothing in the preceding two sentences shall be construed to preclude the provision to individuals of palliative care, treatment, or post-exposure pharmaceutical prophylaxis, and necessary pharmaceuticals and other commodities, including test kits, condoms, and, when proven effective, microbicides.

10. No funds appropriated under this solicitation shall be used to carry out any program of distributing sterile needles or syringes for the hypodermic injection of any illegal drug.

*IV.6. Other Submission Requirements*

*Application Submission Address:* Submit the original and two hard copies of your application by mail or express delivery service to: Technical Information Management-PA 04080, CDC Procurement and Grants Office, 2920 Brandywine Road, Atlanta, GA 30341.

Applications may not be submitted electronically at this time.

**V. Application Review Information**

*V.1. Criteria*

You are required to provide measures of effectiveness that will demonstrate

the accomplishment of the various identified objectives of the cooperative agreement. Measures of effectiveness must relate to the performance goals stated in the ''Purpose'' section of this announcement. Measures must be objective and quantitative, and must measure the intended outcome. These measures of effectiveness must be submitted with the application and will be an element of evaluation. These should be included in your project narrative under ''4. Goals.''

Your application will be evaluated against the following criteria:

A. Current Capability: 80 Total

1. Clinical Care: 20

Does the applicant demonstrate significant experience in implementing or assisting HIV care and treatment programs in the proposed countries? Does the applicant describe technically sound clinical care protocols? Is the applicant currently providing ART?

2. Drug & Health Commodities: 15

Does the applicant describe all aspects of drug management? Do procedures appear to be adequate, including to prevent theft and diversion?

3. Laboratory Services: 15

Are facilities adequate? Are staff qualified? Are there adequate quality assurance measures in place? Is the lab capable of performing a broad range of tests? Can the lab perform CD4 tests?

4. Training: 10

Does the applicant have a history of providing training on a broad number of relevant topics to all levels of staff?

5. Community Mobilization and Behavior: 5

Does the applicant describe efforts to promote testing and plans to provide counseling? Did the applicant describe methods to increase the number of persons who seek HIV testing and methods to increase the number of persons to whom it will provide counseling? Did the applicant describe efforts to support adherence to therapy?

6. Monitoring and Evaluation: 10

Is there a M&E plan in place? Does the plan measure indicators that track program performance?

7. Sustainability: 5

Is the plan for sustainability reasonable and feasible?

B. Feasibility of Expansion Plan: 80 Total

1. Clinical care: 25

Does the applicant propose to provide ART in three or more of the eligible countries? Is the plan to increase the number of persons receiving ART feasible? Is the estimated cost per patient reasonable? Are plans to assure quality of care adequate? Does the applicant demonstrate consistency with national plans?

2. Drug & Health Commodities: 15

Are plans to provide services and assure quality adequate?

3. Laboratory Services: 15

Is the plan to increase laboratory services feasible?

4. Training: 15

Is the plan to expand training feasible? Does the training plan address the needs of the program? Does the applicant address training needs of indigenous staff?

5. Community Mobilization and Behavior: 5

Did the applicant describe how the program will increase the number of persons tested and counseled?

6. Monitoring and Evaluation: 5

Does the plan measure indicators that track program performance?

C. Organizational Structure, Management, and Staffing: 20 Total

1. Organizational Structure: 7

Is the proposed mix of organizations adequate to achieve program objectives? Were letters of support including those of the MOH provided?

2. Staffing: 8

Are the number and types of staff reasonable? Does the applicant provide a realistic sustainability plan?

3. Facilities: 5

Are the facilities adequate to provide the proposed services?

D. Measures of effectiveness: 10 Total

Do the measures of effectiveness address the number of persons receiving ART and clinical outcomes? Are timelines reasonable?

E. Budget: 10 Points

Is the budget reasonable for the proposed activities?

*V.2. Review and Selection Process*

Applications will be reviewed for completeness by the Procurement and Grants Office (PGO) staff, and for responsiveness. Incomplete applications and applications that are non-responsive to the eligibility criteria will not advance through the review process. Applicants will be notified that their application did not meet submission requirements.

An objective review panel will evaluate complete and responsive applications according to the criteria listed in the ''V.1. Criteria'' section above.

In addition, the following factors may affect the funding decision:

- Geographic distribution—to ensure that funding is not concentrated in any one catchment area.
- Cost sharing.
- Number of persons to be treated.
- No award will be made without the concurrence of the U.S. Embassy and the CDC representative in the country under consideration.

*V.3. Anticipated Announcement Award Date*

January 15, 2004.

**VI. Award Administration Information**

*VI.1. Award Notices*

Successful applicants will receive a Notice of Grant Award (NGA) from the CDC Procurement and Grants Office. The NGA shall be the only binding, authorizing document between the recipient and CDC. The NGA will be signed by an authorized Grants Management Officer, and mailed to the recipient fiscal officer identified in the application.

Unsuccessful applications will receive notification of the results of the application review by mail.

*VI.2. Administrative and National Policy Requirements*

45 CFR Part 74 and Part 92.

For more information on the Code of Federal Regulations, see the National Archives and Records Administration at the following Internet address: *http://www.access.pgo.gov/nara/cfr/cfr-table-search.html*

The following additional requirements apply to this project:

- AR–1 Human Subjects Requirements
- AR–4 HIV/AIDS Confidentiality Provisions
- AR–5 HIV Program Review Panel Requirements
- AR–6 Patient Care
- AR–9 Paperwork Reduction Act Requirements
- AR–10 Smoke-Free Workplace Requirements
- AR–12 Lobbying Restrictions
- AR–14 Accounting System Requirements

- AR–16 Security Clearance Requirement
- AR–23 States and Faith-Based Organizations
- AR–24 Health Insurance Portability and Accountability Act Requirements
- AR–25 Release and Sharing of Data

Additional information on these requirements can be found on the CDC web site at the following Internet address: *http://www.cdc.gov/od/pgo/funding/ARs.htm.*

*VI.3. Reporting Requirements*

You must provide CDC with an original, plus two hard copies of the following reports:

1. Interim progress report, no less than 90 days before the end of the budget period. The progress report will serve as your non-competing continuation application, and must contain the following elements:

a. Current Budget Period Activities Objectives.

b. Current Budget Period Financial Progress.

c. New Budget Period Program Proposed Activity Objectives.

d. Detailed Line-Item Budget and Justification.

e. Additional Requested Information.

f. Measures of Effectiveness.

2. Semi-annual progress report, due 7 months after the beginning of each budget period. This report should contain the following elements:

a. Progress on achieving objectives.

b. Modification or new activities.

3. Financial status report, no more than 90 days after the end of the budget period.

4. Final financial and performance reports, no more than 90 days after the end of the project period.

These reports must be sent to the Grants Management Specialist listed in the ''Agency Contacts'' section of this announcement.

**VII. Agency Contacts**

For general questions about this announcement, contact: Technical Information Management Section, CDC Procurement and Grants Office, 2920 Brandywine Road, Atlanta, GA 30341, Telephone: 770–488–2700.

For program technical assistance, contact:

Tedd Ellerbrock, M.D., Project Officer, Centers for Disease Control and Prevention, Global AIDS Program, 1600 Clifton Road, NE, Mailstop E–04, Atlanta, GA 30333, Telephone: 404–639–8944, E-mail: *tellerbrock@cdc.gov.*, or

Joel Kuritsky, M.D., Project Officer, Centers for Disease Control and Prevention, Global AIDS Program, 1600 Clifton Road, NE, Mailstop E–04, Atlanta, GA 30333, Telephone: 404–639–8618, E-mail: *jnk2@cdc.gov.*

For budget assistance, contact: Diane Flournoy, Grants Management Specialist, CDC Procurement and Grants Office, 2920 Brandywine Road, Atlanta, GA 30341, Telephone: 770–488–2072, E-mail: *dmf6@cdc.gov.*

Dated: November 25, 2003.

**Edward Schultz,**

*Acting Director, Procurement and Grants Office, Centers for Disease Control and Prevention.*

[FR Doc. 03–29894 Filed 11–28–03; 8:45 am]

BILLING CODE 4163–18–P

---

## DEPARTMENT OF HEALTH AND HUMAN SERVICES

### Centers for Medicare & Medicaid Services

**[CMS–3070, CMS–10095, and CMS–10096]**

### Agency Information Collection Activities: Submission for OMB Review; Comment Request

*Agency:* Centers for Medicare and Medicaid Services, HHS. In compliance with the requirement of section 3506(c)(2)(A) of the Paperwork Reduction Act of 1995, the Centers for Medicare and Medicaid Services (CMS) (formerly known as the Health Care Financing Administration (HCFA), Department of Health and Human Services, is publishing the following summary of proposed collections for public comment. Interested persons are invited to send comments regarding this burden estimate or any other aspect of this collection of information, including any of the following subjects: (1) The necessity and utility of the proposed information collection for the proper performance of the agency's functions; (2) the accuracy of the estimated burden; (3) ways to enhance the quality, utility, and clarity of the information to be collected; and (4) the use of automated collection techniques or other forms of information technology to minimize the information collection burden.

1. *Type of Information Collection Request:* Extension of a previously approved collection.

*Title of Information Collection:* Intermediate Care Facility for the Mentally Retarded or Persons with Related Conditions ICF/MR Survey Report Form (3070G–I) and Supporting Regulations at 42 CFR 442.30, 483.410, 483.420, 483.440, 483.450, and 483.460.

*Form No.:* CMS–3070 (0938–0062).

*Use:* The survey forms are needed to ensure provider compliance. In order to participate in the Medicaid program as an ICF/MR, a provider must meet Federal standards. The survey report form is used to record providers' level of compliance with the individual standard and report it to the Federal government. The collection includes the information collection requirements that ICF/MRs must meet.

*Frequency:* Annually.

*Affected Public:* Business or other for-profit, Not-for-profit institutions.

*Number of Respondents:* 6,763.

*Total Annual Responses:* 177,721,815.

*Total Annual Hours:* 6,841,538.

2. *Type of Information Collection Request:* New Collection.

*Title of Information Collection:* ''Detailed Explanation of Non-Coverage'' 42 CFR 422.626(e)(1), and ''Important Message of Non-Coverage'' 42 CFR 625(b)(1).

*Form No.:* CMS–10095 (OMB# 0938–NEW).

*Use:* Pursuant of 42 CFR 422.624(b)(1), providers in skilled nursing facilities, home health agencies, and comprehensive outpatient rehabilitation facilities must deliver to M+C enrollees a 2-day advance notice of termination of services. Per requirements at 42 CFR 422.626(e)(1), M+C organizations must deliver detailed notices to the QIO and enrollees upon request for appeal of the termination of services. These notices fulfill the regulatory requirement.

*Frequency:* Other: distribution.

*Affected Public:* Business or other-for-profit, Not-for-profit institutions, Federal Government, and Individuals or Households.

*Number of Respondents:* 22,247.

*Total Annual Responses:* 612,000.

*Total Annual Hours:* 68,000.

3. *Type of Information Collection Request:* New Collection.

*Title of Information Collection:* Medicare Health Survey (MHS).

*Form No.:* CMS–10096 (OMB# 0938–NEW).

*Use:* The Centers for Medicare and Medicaid Services has developed a survey, the Medicare Health Survey, that is similar to the Health Outcomes Survey (HOS). The main purpose of the MHS is to collect information that may be used to adjust Medicare payment. This approach has been tested for PACE (as mandated by BBA) and other organizations that serve frail populations and frailty adjusted payments will be made to PACE and certain demonstrations starting in 2004. CMS is currently investigating the feasibility of applying frailty adjustment to the M+C program in the future. To

conduct the necessary research, CMS needs functional impairment information for a national sample of FFS beneficiaries. The information will be used for two purposes; to develop appropriate adjustments to the ratebook for levels of functional impairment, and to recalibrate the frailty payment model using FFS data. Adjusting the ratebook is necessary to ensure accurate payment while recalibration of the frailty model based on the MHS will properly align the calibration of the model and the data collection method, thereby avoiding payment error associated with the mode of administration issues.

*Frequency:* Annually.

*Affected Public:* Individuals or Households.

*Number of Respondents:* 50,000.

*Total Annual Responses:* 40,000.

*Total Annual Hours:* 6,667.

To obtain copies of the supporting statement and any related forms for the proposed paperwork collections referenced above, access CMS Web site address at *http://cms.hhs.gov/regulations/pra/default.asp,* or E-mail your request, including your address, phone number, OMB number, and CMS document identifier, to *Paperwork@hcfa.gov,* or call the Reports Clearance Office on (410) 786–1326. Written comments and recommendations for the proposed information collections must be mailed within 30 days of this notice directly to the OMB desk officer: OMB Human Resources and Housing Branch, Attention: Brenda Aguilar, New Executive Office Building, Room 10235, Washington, DC 20503.

Dated: November 20, 2003.

**Melissa Musotto,**

*Acting Paperwork Reduction Act Team Leader, CMS Reports Clearance Officer, Office of Strategic Operations and Strategic Affairs, Division of Regulations Development and Issuances.*

[FR Doc. 03–29821 Filed 11–28–03; 8:45 am]

**BILLING CODE 4120–03–P**

---

## DEPARTMENT OF HEALTH AND HUMAN SERVICES

### Centers for Medicare & Medicaid Services

**[CMS–2728, CMS–2540–96, CMS–1728–94]**

### Agency Information Collection Activities: Proposed Collection; Comment Request

**AGENCY:** Centers for Medicare and Medicaid Services, HHS.

In compliance with the requirement of section 3506(c)(2)(A) of the Paperwork Reduction Act of 1995, the Centers for Medicare and Medicaid Services (CMS) (formerly known as the Health Care Financing Administration (HCFA)), Department of Health and Human Services, is publishing the following summary of proposed collections for public comment. Interested persons are invited to send comments regarding this burden estimate or any other aspect of this collection of information, including any of the following subjects: (1) The necessity and utility of the proposed information collection for the proper performance of the agency's functions; (2) the accuracy of the estimated burden; (3) ways to enhance the quality, utility, and clarity of the information to be collected; and (4) the use of automated collection techniques or other forms of information technology to minimize the information collection burden.

1. *Type of Information Collection Request:* Revision of a currently approved collection.

*Title of Information Collection:* End Stage Renal Disease Medical Evidence Report Medicare Entitlement and/or Patient Registration and Supporting Regulations in 42 CFR 405.2133.

*Form No.:* CMS–2728 (OMB# 0938–0046).

*Use:* This form captures the necessary medical information required to determine Medicare eligibility of an end stage renal disease claimant. It also captures the specific medical data required for research and policy decisions on this population as required by law.

*Frequency:* Weekly, Monthly, Quarterly, Semi-annually and Annually.

*Affected Public:* Individuals or Households, Business or other for-profit, Not-for-profit institutions.

*Number of Respondents:* 100,000.

*Total Annual Responses:* 100,000.

*Total Annual Hours:* 75,000.

2. *Type of Information Collection Request:* Extension of a currently approved collection.

*Title of Information Collection:* Skilled Nursing Facility Cost Report and Supporting Regulations in 42 CFR 413.20, 413.24, and 413.106.

*Form No.:* CMS–2540–96 (OMB 0938–0463).

*Use:* Form CMS–2540–96 is the form used by skilled nursing facilities participating in the Medicare program. This form reports the health care costs used to determine the amount of reimbursable costs for services rendered to Medicare beneficiaries.

*Frequency:* Annually.

*Affected Public:* Businesses or other for-profit. Not-for-profit institutions and State, Local or Tribal Government.

*Number of Respondents:* 13,000.

*Total Annual Responses:* 13,000.

*Total Annual Hours:* 2,480,000.

3. *Type of Information Collection Request:* Revision of a currently approved collection.

*Title of Information Collection:* Home Health Agency Cost Report and Supporting Regulations in 42 CFR 413.20, 413.24 and 413.106.

*Form No.:* CMS–1728 (OMB No. 0938–0022).

*Use:* Participating providers are required to submit annual information to CMS in order to achieve settlement of costs for health care services rendered to Medicare beneficiaries. The CMS–1728 is the form used by Home Health Agencies to report their health care costs to determine the amount reimbursable for services furnished to Medicare beneficiaries.

*Frequency:* Annually.

*Affected Public:* Business or other for profit, Not for profit institutions, and State, Local or Tribal Gov.

*Number of Respondents:* 7,310.

*Total Annual Responses:* 7,310.

*Total Annual Hours Requested:* 1,311,060.

To obtain copies of the supporting statement and any related forms for the proposed paperwork collections referenced above, access CMS's Web site address at *http://cms.hhs.gov/regulations/pra/default.asp,* or E-mail your request, including your address, phone number, OMB number, and CMS document identifier, to *Paperwork@hcfa.gov,* or call the Reports Clearance Office on (410) 786–1326. Written comments and recommendations for the proposed information collections must be mailed within 60 days of this notice directly to the CMS Paperwork Clearance Officer designated at the following address: CMS, Office of Strategic Operations and Regulatory Affairs, Division of Regulations Development and Issuances, Attention: Melissa Musotto, Room C5–14–03, 7500 Security Boulevard, Baltimore, Maryland 21244–1850.

Dated: November 20, 2003.

**Melissa Musotto,**

*Acting Paperwork Reduction Act Team Leader, Office of Strategic Operations and Strategic Affairs, Division of Regulations Development and Issuances.*

[FR Doc. 03–29822 Filed 11–28–03; 8:45 am]

**BILLING CODE 4120–03–P**

## DEPARTMENT OF HEALTH AND HUMAN SERVICES

### Administration for Children and Families

### Office of Community Services; Grant to the Concordia Avondale Campus

**AGENCY:** Office of Community Services, ACF, HHS.

**ACTION:** Award announcement.

**SUMMARY:** Notice is hereby given that ACF will award grant funds without competition to Concordia Avondale Campus in Chicago, Illinois. This grant is being awarded for a project that conforms to the applicable program objectives, is within legislative authorities, and proposes activities that may be lawfully supported through grant mechanisms. Their grant application is of outstanding and unique merit and presents an opportunity to produce meaningful, sustainable, and useful results in an area of significant interest to ACF.

The Concordia Avondale project will support a two-year effort to provide social and economic services that support low-income, working poor and single-parent families in their communities. These services include child care and after-school programs in the North Center, Lakeview and Ravenswood communities through a sliding scale tuition. The project will be funded at $700,000 for the first year and $800,000 for the second year.

**FOR FURTHER INFORMATION CONTACT:** Carol Watkins, Office of Community Services on (202) 401–9356.

Dated: November 24, 2003.

**Clarence Carter,**

*Director, Office of Community Services.*

[FR Doc. 03–29837 Filed 11–28–03; 8:45 am]

BILLING CODE 4184–01–P

## DEPARTMENT OF HEALTH AND HUMAN SERVICES

### Food and Drug Administration

**[Docket No. 2003N–0200]**

### Agency Information Collection Activities; Announcement of OMB Approval; Export of Medical Devices—Foreign Letters of Approval

**AGENCY:** Food and Drug Administration, HHS.

**ACTION:** Notice.

**SUMMARY:** The Food and Drug Administration (FDA) is announcing that a collection of information entitled ''Export of Medical Devices—Foreign Letters of Approval'' has been approved by the Office of Management and Budget (OMB) under the Paperwork Reduction Act of 1995.

**FOR FURTHER INFORMATION CONTACT:** Peggy Robbins, Office of Management Programs (HFA–250), Food and Drug Administration, 5600 Fishers Lane, Rockville, MD 20857, 301–827–1223.

**SUPPLEMENTARY INFORMATION:** In the **Federal Register** of August 25, 2003 (68 FR 51023), the agency announced that the proposed information collection had been submitted to OMB for review and clearance under 44 U.S.C. 3507. An agency may not conduct or sponsor, and a person is not required to respond to, a collection of information unless it displays a currently valid OMB control number. OMB has now approved the information collection and has assigned OMB control number 0910–0264. The approval expires on November 30, 2006. A copy of the supporting statement for this information collection is available on the Internet at *http://www.fda.gov/ohrms/dockets*.

Dated: November 21, 2003.

**Jeffrey Shuren,**

*Assistant Commissioner for Policy.*

[FR Doc. 03–29743 Filed 11–28–03; 8:45 am]

BILLING CODE 4160–01–S

## DEPARTMENT OF HEALTH AND HUMAN SERVICES

### Food and Drug Administration

**[Docket No. 2003N–0194]**

### Agency Information Collection Activities; Announcement of OMB Approval; Agreement for Shipment of Devices for Sterilization

**AGENCY:** Food and Drug Administration, HHS.

**ACTION:** Notice.

**SUMMARY:** The Food and Drug Administration (FDA) is announcing that a collection of information entitled ''Agreement for Shipment of Devices for Sterilization'' has been approved by the Office of Management and Budget (OMB) under the Paperwork Reduction Act of 1995.

**FOR FURTHER INFORMATION CONTACT:** Peggy Robbins, Office of Management Programs (HFA–250), Food and Drug Administration, 5600 Fishers Lane, Rockville, MD 20857, 301–827–1223.

**SUPPLEMENTARY INFORMATION:** In the **Federal Register** of August 12, 2003 (68 FR 47919), the agency announced that the proposed information collection had been submitted to OMB for review and clearance under 44 U.S.C. 3507. An agency may not conduct or sponsor, and a person is not required to respond to, a collection of information unless it displays a currently valid OMB control number. OMB has now approved the information collection and has assigned OMB control number 0910–0131. The approval expires on November 30, 2006. A copy of the supporting statement for this information collection is available on the Internet at *http://www.fda.gov/ohrms/dockets*.

Dated: November 21, 2003.

**Jeffrey Shuren,**

*Assistant Commissioner for Policy.*

[FR Doc. 03–29745 Filed 11–28–03; 8:45 am]

BILLING CODE 4160–01–S

## DEPARTMENT OF HEALTH AND HUMAN SERVICES

### Food and Drug Administration

**[Docket No. 2003E–0246]**

### Determination of Regulatory Review Period for Purposes of Patent Extension; DERAMAXX

**AGENCY:** Food and Drug Administration, HHS.

**ACTION:** Notice.

**SUMMARY:** The Food and Drug Administration (FDA) has determined the regulatory review period for DERAMAXX and is publishing this notice of that determination as required by law. FDA has made the determination because of the submission of an application to the Director of Patents and Trademarks, Department of Commerce, for the extension of a patent which claims that animal drug product.

**ADDRESSES:** Submit written comments and petitions to the Division of Dockets Management (HFA–305), Food and Drug Administration, 5630 Fishers Lane, rm. 1061, Rockville, MD 20852. Submit electronic comments to *http://www.fda.gov/dockets/ecomments*.

**FOR FURTHER INFORMATION CONTACT:** Claudia Grillo, Office of Regulatory Policy (HFD–013), Center for Drug Evaluation and Research, Food and Drug Administration, 5600 Fishers Lane, Rockville, MD 20857, 240–453–6699.

**SUPPLEMENTARY INFORMATION:** The Drug Price Competition and Patent Term Restoration Act of 1984 (Public Law 98–417) and the Generic Animal Drug and Patent Term Restoration Act (Public Law 100–670) generally provide that a patent may be extended for a period of up to 5 years so long as the patented item (human drug product, animal drug

product, medical device, food additive, or color additive) was subject to regulatory review by FDA before the item was marketed. Under these acts, a product's regulatory review period forms the basis for determining the amount of extension an applicant may receive.

A regulatory review period consists of two periods of time: A testing phase and an approval phase. For animal drug products, the testing phase begins on the earlier date when either a major environmental effects test was initiated for the drug or when an exemption under section 512(j) of the Federal Food, Drug, and Cosmetic Act (the act) (21 U.S.C. 360b(j)) became effective and runs until the approval phase begins. The approval phase starts with the initial submission of an application to market the animal drug product and continues until FDA grants permission to market the drug product. Although only a portion of a regulatory review period may count toward the actual amount of extension that the Director of Patents and Trademarks may award (for example, half the testing phase must be subtracted as well as any time that may have occurred before the patent was issued), FDA's determination of the length of a regulatory review period for an animal drug product will include all of the testing phase and approval phase as specified in 35 U.S.C. 156(g)(4)(B).

FDA recently approved for marketing the animal drug product DERAMAXX (deracoxib). DERAMAXX is indicated for the control of postoperative pain and inflammation associated with orthopedic surgery. Subsequent to this approval, the Patent and Trademark Office received a patent term restoration application for DERAMAXX (U.S. Patent No. 5,521,207) from G. D. Searle L.L.C., and the Patent and Trademark Office requested FDA's assistance in determining this patent's eligibility for patent term restoration. In a letter dated July 16, 2003, FDA advised the Patent and Trademark Office that this animal drug product had undergone a regulatory review period and that the approval of DERAMAXX represented the first permitted commercial marketing or use of the product. Shortly thereafter, the Patent and Trademark Office requested that FDA determine the product's regulatory review period.

FDA has determined that the applicable regulatory review period for DERAMAXX is 1,675 days. Of this time, 1,578 days occurred during the testing phase of the regulatory review period, and 97 days occurred during the approval phase. These periods of time were derived from the following dates:

1. *The date an exemption under section 512(j) of the Federal Food, Drug, and Cosmetic Act (21 U.S.C. 360b(j)) involving this animal drug product became effective*: January 21, 1998. The applicant claims January 27, 1998, as the date the investigational new animal drug application (INAD) became effective. However, FDA records indicate that the date of FDA's letter assigning a number to the INAD was January 21, 1998, which is considered to be the effective date for the INAD.

2. *The date the application was initially submitted with respect to the animal drug product under section 512(b) of the act*: May 17, 2002. FDA has verified the applicant's claim that the new animal drug application (NADA) for DERAMAXX (NADA 141–203) was initially submitted on May 17, 2002.

3. *The date the application was approved*: August 21, 2002. FDA has verified the applicant's claim that NADA 141–203 was approved on August 21, 2002.

This determination of the regulatory review period establishes the maximum potential length of a patent extension. However, the U.S. Patent and Trademark Office applies several statutory limitations in its calculations of the actual period for patent extension. In its application for patent extension, this applicant seeks 882 days of patent term extension.

Anyone with knowledge that any of the dates as published are incorrect may submit to the Division of Dockets Management (see **ADDRESSES**) written or electronic comments and ask for a redetermination by January 30, 2004. Furthermore, any interested person may petition FDA for a determination regarding whether the applicant for extension acted with due diligence during the regulatory review period by June 1, 2004. To meet its burden, the petition must contain sufficient facts to merit an FDA investigation. (See H. Rept. 857, part 1, 98th Cong., 2d sess., pp. 41–42, 1984.) Petitions should be in the format specified in 21 CFR 10.30.

Comments and petitions should be submitted to the Division of Dockets Management (see **ADDRESSES**). Three copies of any mailed information are to be submitted, except that individuals may submit one copy. Comments are to be identified with the docket number found in brackets in the heading of this document. Comments and petitions may be seen in the Division of Dockets Management between 9 a.m. and 4 p.m., Monday through Friday.

Dated: October 29, 2003.

**Jane A. Axelrad,**

*Associate Director for Policy, Center for Drug Evaluation and Research.*

[FR Doc. 03–29742 Filed 11–28–03; 8:45 am]

**BILLING CODE 4160–01–S**

## DEPARTMENT OF HEALTH AND HUMAN SERVICES

### Food and Drug Administration

**[Docket No. 2003F–0535]**

### Vulcan Chemicals; Filing of Food Additive Petition

**AGENCY:** Food and Drug Administration, HHS.

**ACTION:** Notice.

**SUMMARY:** The Food and Drug Administration (FDA) is announcing that Vulcan Chemicals has filed a petition proposing that the food additive regulation for chlorine dioxide be amended to provide for an additional method for producing the additive.

**DATES:** Submit written or electronic comments on the petitioner's environmental assessment by December 31, 2003.

**ADDRESSES:** Submit written comments to the Division of Dockets Management (HFA–305), Food and Drug Administration, 5630 Fishers Lane, rm. 1061, Rockville, MD 20852. Submit electronic comments to *http://www.fda.gov/dockets/ecomments*.

**FOR FURTHER INFORMATION CONTACT:** Paul C. DeLeo, Center for Food Safety and Applied Nutrition (HFS–265), Food and Drug Administration, 5100 Paint Branch Pkwy., College Park, MD 20740–3835, 202–418–3014.

**SUPPLEMENTARY INFORMATION:** Under the Federal Food, Drug, and Cosmetic Act (sec. 409(b)(5) (21 U.S.C. 348(b)(5))), notice is given that a food additive petition (FAP 4A4751) has been filed by Vulcan Chemicals, P.O. Box 385015, Birmingham, AL 35238–5015. The petition proposes to amend the food additive regulations in § 173.300 Chlorine dioxide (21 CFR 173.300) to provide for an additional method for producing the additive.

The potential environmental impact of this action is being reviewed. To encourage public participation consistent with regulations issued under the National Environmental Policy Act (40 CFR 1501.4(b)), the agency is placing the environmental assessment submitted with the petition that is the subject of this notice on public display at the Division of Dockets Management (see **ADDRESSES**) for public review and

comment. Interested persons may submit to the Division of Dockets Management written or electronic comments by December 31, 2003. Two copies of any written comments are to be submitted, except that individuals may submit one copy. Comments are to be identified with the docket number found in brackets in the heading of this document. Received comments may be seen in the Division of Dockets Management between 9 a.m. and 4 p.m., Monday through Friday. FDA will also place on public display any amendments to, or comments on, the petitioner's environmental assessment without further announcement in the **Federal Register**. If, based on its review, the agency finds that an environmental impact statement is not required and this petition results in a regulation, the notice of availability of the agency's finding of no significant impact and the evidence supporting that finding will be published with the regulation in the **Federal Register** in accordance with 21 CFR 25.40(c).

Dated: November 13, 2003.

**Laura M. Tarantino,**

*Deputy Director, Office of Food Additive Safety, Center for Food Safety and Applied Nutrition.*

[FR Doc. 03–29744 Filed 11–28–03; 8:45 am]

**BILLING CODE 4160–01–S**

---

## DEPARTMENT OF HEALTH AND HUMAN SERVICES

### Food and Drug Administration

**[Docket No. 2003D–0391]**

### Draft Guidance for Industry and FDA Staff; Class II Special Controls Guidance Document: Dental Precious Metal Alloys and Class II Special Controls Guidance Document: Dental Base Metal Alloys; Availability

**AGENCY:** Food and Drug Administration, HHS.

**ACTION:** Notice.

**SUMMARY:** The Food and Drug Administration (FDA) is announcing the availability of the draft guidance documents entitled ''Class II Special Controls Guidance Document: Dental Precious Metal Alloys'' and ''Class II Special Controls Guidance Document: Dental Base Metal Alloys.'' These guidance documents describe means by which gold-based alloys and precious metal alloys for clinical use and base metal alloy devices may comply with the requirement of special controls for class II devices. Elsewhere in this issue of the **Federal Register**, FDA is publishing a proposed rule to amend the classification regulations of gold-based alloys and precious metal alloys for clinical use and base metal alloy devices presently classified in class II. In the proposed rule, FDA is also proposing to exempt these devices from premarket notification.

**DATES:** Submit written or electronic comments on these draft guidances by March 1, 2004, to ensure their adequate consideration in preparation of the final guidances. General comments on agency guidance documents are welcome at any time.

**ADDRESSES:** Submit written requests for single copies on a 3.5'' diskette of the draft guidance documents entitled ''Class II Special Controls Guidance Document: Dental Precious Metal Alloys'' and ''Class II Special Controls Guidance Document: Dental Base Metal Alloys'' to the Division of Small Manufacturers, International, and Consumer Assistance (HFZ–220), Center for Devices and Radiological Health, Food and Drug Administration, 1350 Piccard Dr., Rockville, MD 20850. Send two self-addressed adhesive labels to assist that office in processing your request, or fax your request to 301–443–8818. See the **SUPPLEMENTARY INFORMATION** section for information on electronic access to the guidance.

Submit written comments on these draft guidances to the Division of Dockets Management (HFA–305), Food and Drug Administration, 5630 Fishers Lane, rm. 1061, Rockville, MD 20852. Submit electronic comments to *http://www.fda.gov/dockets/ecomments*.

**FOR FURTHER INFORMATION CONTACT:** Michael E. Adjodha, Center for Devices and Radiological Health (HFZ–480), Food and Drug Administration, 9200 Corporate Blvd., Rockville, MD 20850, 301–827–5283, ext. 123, *mea@cdrh.fda.gov*.

**SUPPLEMENTARY INFORMATION:**

#### I. Background

FDA is announcing the availability of the draft guidance documents entitled ''Class II Special Controls Guidance Document: Dental Precious Metal Alloys'' and ''Class II Special Controls Guidance Document: Dental Base Metal Alloys.'' These guidance documents describe means by which gold-based alloys and precious metal alloys for clinical use and base metal alloy devices may comply with the requirement of class II special controls. Conformance with these guidance documents as special controls means that manufacturers will be able to introduce their device for commercial distribution in the United States without premarket notification and clearance. If these guidance documents are made final, they will supersede ''Guidance Document for the Preparation of Premarket Notifications [510(k)'s] for Dental Alloys'' issued on March 3, 1997.

Elsewhere in this issue of the **Federal Register**, FDA is publishing a proposed rule to amend the classification regulations of gold-based alloys and precious metal alloys for clinical use and base metal alloy devices presently classified in class II. If the proposed rule becomes final, manufacturers of gold-based alloys and precious metal alloys for clinical use and base metal alloy devices will need to address the issues covered in these special controls guidances in order to be exempt from the 510(k) requirements of the Federal Food, Drug, and Cosmetic Act. However, the manufacturer need only show that its device meets the recommendations of the guidances or in some way provides equivalent assurances of safety and effectiveness. These draft guidance documents are not final nor are they in effect at this time.

#### II. Significance of Guidance

These draft guidances are being issued consistent with FDA's good guidance practices regulation (21 CFR 10.115). The draft guidances represent the agency's current thinking on gold-based alloys and precious metal alloys for clinical use and base metal alloy devices. They do not create or confer any rights for or on any person and do not operate to bind FDA or the public. An alternative approach may be used if such approach satisfies the requirements of the applicable statute and regulations.

#### III. Paperwork Reduction Act of 1995

These guidances contain information collection provisions that are subject to review by the Office of Management and Budget (OMB) under the Paperwork Reduction Act of 1995 (44 U.S.C. 3501–3520) (the PRA). The collections of information addressed in the guidance documents have been approved by OMB in accordance with the PRA under the regulations governing premarket notification submissions (21 CFR part 807, subpart E, OMB control number 0910–0120). The labeling provisions addressed in the guidances have been approved by OMB under the PRA under OMB control number 0910–0485.

#### IV. Comments

Interested persons may submit to the Division of Dockets Management (see **ADDRESSES**) written or electronic comments on these draft guidances. Submit a single copy of electronic comments to *http://www.fda.gov/*

*dockets/ecomments* or two paper copies of any written comments, except that individuals may submit one paper copy. Comments are to be identified with the docket number found in brackets in the heading of this document. Copies of the draft guidance documents and received comments may be seen in the Division of Dockets Management between 9 a.m. and 4 p.m., Monday through Friday.

**V. Electronic Access**

To receive ''Class II Special Controls Guidance Document: Dental Precious Metal Alloys'' by fax, call the CDRH Facts-On-Demand system at 800–899–0381 or 301–827–0111 from a touch-tone telephone. Press 1 to enter the system. At the second voice prompt, press 1 to order a document. Enter the document number (1415) followed by the pound sign (#). Follow the remaining voice prompts to complete your request. To receive ''Class II Special Controls Guidance Document: Dental Base Metal Alloys'' by fax, call the CDRH Facts-On-Demand system at 800–899–0381 or 301–827–0111 from a touch-tone telephone. Press 1 to enter the system. At the second voice prompt, press 1 to order a document. Enter the document number (1416) followed by the pound sign (#). Follow the remaining voice prompts to complete your request.

Persons interested in obtaining a copy of these draft guidances may also do so using the Internet. CDRH maintains a site on the Internet for easy access to information including text, graphics, and files that may be downloaded to a personal computer with Internet access. Updated on a regular basis, the CDRH home page includes device safety alerts, **Federal Register** reprints, information on premarket submissions (including lists of approved applications and manufacturers' addresses), small manufacturer's assistance, information on video conferencing and electronic submissions, Mammography Matters, and other device-oriented information. The CDRH web site may be accessed at *http://www.fda.gov/cdrh*. A search capability for all CDRH guidance documents is available at *http://www.fda.gov/cdrh/guidance.html*. Guidance documents are also available on the Division of Dockets Management Internet site at *http://www.fda.gov/ohrms/dockets*.

Dated: October 2, 2003.

**Linda S. Kahan,**

*Deputy Director, Center for Devices and Radiological Health.*

[FR Doc. 03–29740 Filed 11–28–03; 8:45 am]

BILLING CODE 4160–01–S

## DEPARTMENT OF HEALTH AND HUMAN SERVICES

### Office of Inspector General

### Program Exclusions: October 2003

**AGENCY:** Office of Inspector General, HHS.

**ACTION:** Notice of program exclusions.

During the month of October 2003, the HHS Office of Inspector General imposed exclusions in the cases set forth below. When an exclusions is imposed, no program payment is made to anyone for any items or services (other than an emergency item or service not provided in a hospital emergency room) furnished, ordered or prescribed by an excluded party under the Medicare, Medicaid, and all Federal Health Care programs. In addition, no program payment is made to any business or facility, *e.g.*, a hospital, that submits bills for payment for items or services provided by an excluded party. Program beneficiaries remain free to decide for themselves whether they will continue to use the services of an excluded party even though no program payments will be made for items and services provided by that excluded party. The exclusions have national effect and also apply to all Executive Branch procurement and non-procurement programs and activities.

OFFICE OF INVESTIGATION OFFICE OF INSPECTOR GENERAL—DHHS CASE INVESTIGATION MANAGEMENT SYSTEM FOR PRESS RELEASE FROM 10/01/2003–10/31/2003

| Subject name | Address | Effective date |
|---|---|---|
| **PROGRAM-RELATED CONVICTIONS** | | |
| ANDERSON, WALTER | TERRE HAUTE, IN | 11/20/2003 |
| ANDERSON, WALTER | LOMA LINDA, CA | 11/20/2003 |
| ANTONIAN, VICKI | FRESNO, CA | 11/20/2003 |
| BAJWA, AHSAN | FRESNO, CA | 11/20/2003 |
| BLAU, SEYMOUR | JERSEY CITY, NJ | 11/20/2003 |
| BRAVO, LAZARO | MIAMI, FL | 11/20/2003 |
| BROWN-CANTY, JOANN | CLOVER, SC | 11/20/2003 |
| CASTILLO, JOSE | HOLLISTER, CA | 11/20/2003 |
| COATES, DEBRA | FORT WORTH, TX | 11/20/2003 |
| DAVIS, TAMIKA | CHARLESTON, MS | 11/20/2003 |
| DOYLE, BRIAN | ATLANTA, GA | 11/20/2003 |
| FRENCH, MARGARET | LYNDONVILLE, NY | 11/20/2003 |
| FULTZ, CHERRY | UTICA, MS | 11/20/2003 |
| GUOZALIAN, MANOUK | LONG BEACH, CA | 11/20/2003 |
| GUPTA, RAJENDRA | OTISVILLE, NY | 11/20/2003 |
| MARTINEZ, MICHAEL | ALBUQUERQUE, NM | 11/20/2003 |
| MITCHAM, KIMBERLY | WOODVILLE, TX | 11/20/2003 |
| OSSOM, CHRISTINA | TAHLEQUAH, OK | 11/20/2003 |
| RAMOS, AMADO | THREE RIVERS, TX | 11/20/2003 |
| RODRIGUEZ, DENNIS | BRANDON, FL | 11/20/2003 |
| SAAKYAN, KARAPET | LONG BEACH, CA | 11/20/2003 |
| SAUCEDA, THOMAS | HOUSTON, TX | 11/20/2003 |
| SHEIKH, ASIF | CAMARILLO, CA | 11/20/2003 |
| SHEIKH, NAFEESA | NUTLEY, NJ | 11/20/2003 |
| STEELY, RENEE | SPRINGHILL, FL | 11/20/2003 |
| TITIZYAN, OGANES | LONG BEACH, CA | 11/20/2003 |
| VILLAMIZAR, CARLOS | ADELANTO, CA | 11/20/2003 |

OFFICE OF INVESTIGATION OFFICE OF INSPECTOR GENERAL—DHHS CASE INVESTIGATION MANAGEMENT SYSTEM FOR PRESS RELEASE FROM 10/01/2003–10/31/2003—Continued

| Subject name | Address | Effective date |
|---|---|---|
| VISALLI, CHARLES | MIAMI, FL | 11/20/2003 |
| W & M HEALTHCARE, INC | ELKHART, IN | 11/20/2003 |
| **FELONY CONVICTION FOR HEALTH CARE FRAUD** | | |
| EGGLESTON, ADELBERT | STOCKTON, CA | 11/20/2003 |
| ERLIKH, RUSLAN | BROOKLYN, NY | 11/20/2003 |
| FONTANELLA, DANIEL | TOTOWA, NJ | 11/20/2003 |
| HATTER, RONALD | ASHEVILLE, NC | 11/20/2003 |
| NAZAROVA, SOFIYA | BROOKLYN, NY | 11/20/2003 |
| RISE, SCOTT | WAUWATOSA, WI | 11/20/2003 |
| SCHULTZ, JANET | SUN CITY, AZ | 11/20/2003 |
| SPANO, ANTHONY | HILLSDALE, NJ | 11/20/2003 |
| SPEARS, TAMMY | OSBURN, ID | 11/20/2003 |
| VALLE, JULIO | MIAMI, FL | 11/20/2003 |
| **FELONY CONTROL SUBSTANCE CONVICTION** | | |
| BASHAW, ROBERT | MADISON, WI | 11/20/2003 |
| HEINZMAN, KIMBERLY | LONGVIEW, WA | 11/20/2003 |
| MCCOLLISTER, RANDALL | ASHLAND, KY | 11/20/2003 |
| MULLINS, PATRICIA | DAYTON, OH | 11/20/2003 |
| NAVARRO, JOSE | MIAMI, FL | 11/20/2003 |
| SOUTH, MELODY | PINEY FLATS, TN | 11/20/2003 |
| **PATIENT ABUSE/NEGLECT CONVICTIONS** | | |
| BETTS, TOREY | BELDEN, MS | 11/20/2003 |
| BEVERLEIGH, HOWARD | SAN JOSE, CA | 11/20/2003 |
| HEDGEMAN, TIMMY | DELHI, LA | 11/20/2003 |
| LOCKWOOD, ROBERT | MOXEE, WA | 11/20/2003 |
| PANGALILA, TOMMY | EVERETT, WA | 11/20/2003 |
| RAMMACHER, JOHN | HAMBURG, NY | 11/20/2003 |
| TADEO, SHARMINA | VALLEJO, CA | 11/20/2003 |
| WASHINGTON, SONJA | SOUTH BAY, FL | 11/20/2003 |
| WHITE, DAWNESE | JACKSON, MS | 11/20/2003 |
| **CONVICTION FOR HEALTH CARE FRAUD** | | |
| PEREZ, MARIA DEL CARMEN | ORLANDO, FL | 11/20/2003 |
| **LICENSE REVOCATION/SUSPENSION/SURRENDER** | | |
| ANDERSON, RODNEY | SHREVEPORT, LA | 11/20/2003 |
| AQUINO, ROMEO | TUCSON, AZ | 11/20/2003 |
| AUSTIN, BERNICE | ST FRANCISVILLE, LA | 11/20/2003 |
| BARNES, MELANIE | WALLACE, NC | 11/20/2003 |
| BARNES, STEVEN | HOUSTON, TX | 11/20/2003 |
| BARNHART, SHARON | VICTORVILLE, CA | 11/20/2003 |
| BARRY, CAROLE | MESA, AZ | 11/20/2003 |
| BOSLOUGH, MERRY | BRIGHTON, CO | 11/20/2003 |
| BRIGANCE, TROY | BALTIMORE, MD | 11/20/2003 |
| BRIGGS, WILLIAM | WALLA WALLA, WA | 11/20/2003 |
| BROMBY, SHERROLYN | APPLE VALLEY, CA | 11/20/2003 |
| BROWN, JANET | TEXAS CITY, TX | 11/20/2003 |
| BRUNJES, SHANNON | ALTADENA, CA | 11/20/2003 |
| CHAPMAN, EDWARD | NEWTON LOWER FALLS, MA | 11/20/2003 |
| CHENNAULT, ELIZABETH | AUSTIN, TX | 11/20/2003 |
| CISCO, BONNIE | BRIDGEPORT, AL | 11/20/2003 |
| COOPER, RICHARD | LAUDERDALE BY THE SEA, FL | 11/20/2003 |
| COX, LISA | CHICKASHA, OK | 11/20/2003 |
| DANZEY, DEBRA | MONTGOMERY, AL | 11/20/2003 |
| DAVIS, SHERRY | BESSEMER, AL | 11/20/2003 |
| DAWSON, TAMMY | TUSCUMBIA, AL | 11/20/2003 |
| DICKERSON, SHIRLEY | SHAWSVILLE, VA | 11/20/2003 |
| DIRE, PATRICIA | PHOENIX, AZ | 11/20/2003 |
| DOWNS, JILL | COLUMBUS, IN | 11/20/2003 |
| DUFFEY, ERVIN | BLOOMINGTON, CA | 11/20/2003 |
| ELMORE, PENNY | AMARILLO, TX | 11/20/2003 |
| ETER, MAHER | SUN CITY CENTER, FL | 11/20/2003 |
| FARRAR, CLAUDIA | NORTHPORT, AL | 11/20/2003 |

OFFICE OF INVESTIGATION OFFICE OF INSPECTOR GENERAL—DHHS CASE INVESTIGATION MANAGEMENT SYSTEM FOR PRESS RELEASE FROM 10/01/2003–10/31/2003—Continued

| Subject name | Address | Effective date |
|---|---|---|
| FISH, TRACEY | FARMINGDALE, ME | 11/20/2003 |
| FORNCROOK, DONALD | OAKLAND, FL | 11/20/2003 |
| FRIEDMAN, SHELLEY | SARASOTA, FL | 11/20/2003 |
| GAINES, NEDA | ROGERS, AR | 11/20/2003 |
| GASS, TRACEY | AMARILLO, TX | 11/20/2003 |
| GODSIL, CATHERINE | GALESBURG, IL | 11/20/2003 |
| GREEN, MARILYN | GALESBURG, IL | 11/20/2003 |
| GRIFFITH, KAREN | OPELIKA, AL | 11/20/2003 |
| HABERSHAM, BEVERLY | FAIRFIELD, CA | 11/20/2003 |
| HALL, BEVERLY | BIG STONE GAP, VA | 11/20/2003 |
| HAYES, MARGARET | MOBILE, AL | 11/20/2003 |
| HENDL, CHARLENE | LEICESTER, NC | 11/20/2003 |
| HEROLD, CARLA | WASHOUGAL, WA | 11/20/2003 |
| HERRMANN, NANCY | TULSA, OK | 11/20/2003 |
| HESS, NANCY | EVERSON, WA | 11/20/2003 |
| HIETT, JAMES | AVON, IL | 11/20/2003 |
| HILL, CANDANCE | PHOENIX, AZ | 11/20/2003 |
| HILL, JAMES | NORMAN, OK | 11/20/2003 |
| HUIE, ELIZABETH | ROTON, TX | 11/20/2003 |
| IRLAND, DEBBIE | COLLEGE PLACE, WA | 11/20/2003 |
| JENUSKA, NANCY | NIANTIC, CT | 11/20/2003 |
| JOHNSON, DEBRA | ST GABRIEL, LA | 11/20/2003 |
| JOSEY, MICHELLE | KANNAPOLIS, NC | 11/20/2003 |
| KELLY, TONYA N | MIAMI, FL | 11/20/2003 |
| KNAPP, DIANNE | TIOGA, LA | 11/20/2003 |
| KOOS, DAVID | SURPRISE, AZ | 11/20/2003 |
| LANGAN, PATRICK | MUNHALL, PA | 11/20/2003 |
| LIVINGSTON NAIL, AMY | SKIATOOK, OK | 11/20/2003 |
| MATTESON, JENNIFER | MOUNT VERNON, WA | 11/20/2003 |
| MCENTURFF, CARLA | GRAND SALINE, TX | 11/20/2003 |
| MCFERRIN, THOMAS | AMITE, LA | 11/20/2003 |
| MILLER, THOMAS | KILLINGLY, CT | 11/20/2003 |
| MINTZER, PAULETTE | LEWISBURG, PA | 11/20/2003 |
| MOOSE, JAMES | CHESAPEAKE, VA | 11/20/2003 |
| NORMAN, VERSARAY | CHESAPEAKE, VA | 11/20/2003 |
| O'NEAL, SYLVIA | VALDOSTA, GA | 11/20/2003 |
| PENDERGRASS, CHARLES | PENSACOLA, FL | 11/20/2003 |
| PHILLIPS, SCOTT | PONTE VEDRA BEACH, FL | 11/20/2003 |
| PLUMLEY, PEGGY | MATTHEWS, NC | 11/20/2003 |
| PRATER, LAREE | LUBBOCK, TX | 11/20/2003 |
| PULLIAM, DEBORAH | PHOENIX, AZ | 11/20/2003 |
| QUEREQUINCIA, GERMA | OAKVIEW, CA | 11/20/2003 |
| RAY, DENISE | RAYNE, LA | 11/20/2003 |
| REATHERFORD, TRACY | DECATUR, IL | 11/20/2003 |
| RIEFFEL, DONALD | TUCSON, AZ | 11/20/2003 |
| RIVERA, DANIEL | AUSTIN, TX | 11/20/2003 |
| ROBERTS, AMBER | JASPER, AL | 11/20/2003 |
| ROGERS, VALERIE | SOLDOTNA, AK | 11/20/2003 |
| ROW, BRENDA | SNYDER, TX | 11/20/2003 |
| RUJA, RICHARD | NAPA, CA | 11/22/2003 |
| RYAN, JESSIE | SPOKANE, WA | 11/20/2003 |
| SARGENT, SHANNON | N HARTLAND, VT | 11/20/2003 |
| TELFORD, WENDELL | YUMA, AZ | 11/20/2003 |
| TELLEZ, LORI | TUCSON, AZ | 11/20/2003 |
| THOMAS, JAMES | TROY, AL | 11/20/2003 |
| THOUVENELLE, REBECCA | WICHITA, KS | 11/20/2003 |
| TIERNEY, GARY | BOCA RATON, FL | 11/20/2003 |
| TROUP, DARRIN | AUGUSTA, GA | 11/20/2003 |
| TRUETT, STEPHANIE | GADSDEN, AL | 11/20/2003 |
| TUFFY, LIAM | BOSTON, MA | 11/20/2003 |
| VALLIERIE, STACIE | GASTONIA, NC | 11/20/2003 |
| VODOSIA, BRANDY | SUMITON, AL | 11/20/2003 |
| WASHINGTON, QUINTINA | LOS ANGELES, CA | 11/20/2003 |
| **FEDERAL/STATE EXCLUSION/SUSPENSION** | | |
| ESMAIL, ZULFIKAR | EVANSTON, IL | 11/20/2003 |
| **FRAUD/KICKBACKS** | | |
| STRUB, DANIEL | POWAY, CA | 7/23/2003 |

OFFICE OF INVESTIGATION OFFICE OF INSPECTOR GENERAL—DHHS CASE INVESTIGATION MANAGEMENT SYSTEM FOR PRESS RELEASE FROM 10/01/2003–10/31/2003—Continued

| Subject name | Address | Effective date |
|---|---|---|
| **OWNED/CONTROLLED BY CONVICTED ENTITIES** | | |
| SMILES R US DENTAL GROUP, INC | MIAMI, FL | 11/20/2003 |
| TREATMENT RESOURCES II, INC | EGLIN AFB, FL | 11/20/2003 |
| **DEFAULT ON HEAL LOAN** | | |
| BURNETTE, DAVID | FORREST CITY, AR | 8/22/2003 |
| GOODWIN, MARK | TULSA, OK | 10/7/2003 |
| QUIGLEY, MICHAEL | HARRISBURG, PA | 11/20/2003 |
| THOMLINSON, ALISON | N MIAMI BEACH, FL | 10/9/2003 |

Dated: November 4, 2003.

**Kathleen Pettit,**

*Acting Director, , Exclusions Staff, Office of Inspector General.*

[FR Doc. 03–29820 Filed 11–28–03; 8:45 am]

BILLING CODE 4150–04–P

## DEPARTMENT OF HOMELAND SECURITY

## Coast Guard

**[CGD05–03–185]**

## Upper Chesapeake Estuary Area Committee Meeting, Preparedness for Response Exercise Program (PREP) Area Exercise; Captain of the Port Baltimore, MD

**AGENCY:** Coast Guard, DHS.

**ACTION:** Notice of meeting.

**SUMMARY:** The Captain of the Port Baltimore, MD will hold an Area Committee Meeting to discuss various issues related to the Upper Chesapeake Estuary Area Contingency Plan and 2004 industry-led Preparedness for Response Exercise Program (PREP) exercise. The meeting will not be open to the public.

**DATES:** The meeting will be held on Tuesday, December 16, 2003, from 1 p.m. to 4 p.m. The meeting may close early if all business is finished. Written material and requests to make oral presentations should reach the Coast Guard on or before December 9, 2003. Requests to have a copy of your material distributed to each member of the committee should reach the Coast Guard on or before December 9, 2003.

**ADDRESSES:** The Area Committee will meet in the Chesapeake Bay Foundation's conference Room, Phillip Merrill Environmental Center, 6 Herndon Avenue, Annapolis, MD.

Send written material and requests to make oral presentations to Commander, U.S. Coast Guard Activities, 2401 Hawkins Point Road, Baltimore, MD. 21226–0001. Comments and material received from the public, as well as documents indicated in this preamble as being available in the docket, are part of docket [CGD05–03–185] and are available for inspection or copying at U.S. Coast Guard Activities, 2401 Hawkins Point Road, Baltimore, MD 21226–0001.

**FOR FURTHER INFORMATION CONTACT:** Lieutenant Lisa Knopf, telephone 410–576–2657, or Lieutenant Leslie Wright, telephone 410–576–2657, of the Marine Environmental Response Division. Written material and requests may be faxed to 410–576–2688.

**SUPPLEMENTARY INFORMATION:** Section 4202 of the Oil Pollution Act of 1990 (OPA 90) amended Subsection (j) of Section 311 of the Federal Water Pollution Control Act (FWPCA) (33 U.S.C. 1321 (j)) to address the development of a National Planning and Response System. As part of this system, Area Committees (ACs) are to be established for each designated area. Area Committees are to be comprised of qualified personnel from federal, state, and local agencies and are exempted from Federal Advisory Committee Act (FACA), Public Law 92–436, 86 Stat. 470 (5 U.S.C. App.2). Each Area Committee under the direction of the Federal On-Scene Coordinator (FOSC) for the area is responsible for developing an Area Contingency Plan (ACP) in conjunction with the National Contingency Plan (NCP). The Coast Guard COTP Baltimore is holding a meeting, in order to review the ACP and develop the Area Planning for Response and Exercise Program (PREP) industry lead exercise. This meeting will offer an opportunity to comment on the ACP and the PREP exercise.

### Agenda of Meeting

The agenda includes the following:

(1) Presentation on the Unified Command response to the M/V Seawitch.

(2) Presentation on USCG role in the Maritime Transportation Security Act.

(3) Update on area's scheduled Industry-Led PREP exercise.

(4) Open Forum.

### Procedural

The meeting is not open to the public. Requests to attend the meeting may be submitted to the Coast Guard under **ADDRESSES**. Requests should include Name, Company or Agency, Address, Phone, Fax, and E-mail. Please note that the meeting may close early if all business is finished. At the Captain of the Port's discretion, attendees may make oral presentations during the meeting. If you would like to make an oral presentation at the meeting, please notify Lieutenant Wright listed under **FOR FURTHER INFORMATION CONTACT** no later than December 9, 2003. Written material for distribution at the meeting should reach the Coast Guard no later than December 9, 2003. If you would like a copy of your material distributed at the meeting, please submit 25 copies to the Coast Guard listed under **ADDRESSES** no later than December 9, 2003.

### Information on Services for Individuals with Disabilities

For information on facilities or services for individuals with disabilities or to request special assistance at the meeting, contact the Lieutenant Wright listed under **FOR FURTHER INFORMATION CONTACT** as soon as possible.

Dated: November 14, 2003.

**Curtis A. Springer,**

*Captain, U.S. Coast Guard, Captain of the Port, Baltimore, Maryland.*

[FR Doc. 03–29843 Filed 11–28–03; 8:45 am]

BILLING CODE 4910–15–P

## DEPARTMENT OF HOUSING AND URBAN DEVELOPMENT

**[Docket No. FR–4818–N–13]**

## Notice of Proposed Information Collection for Public Comment: Project Rent Surveys for Update of Section 8 Fair Market Rents

**AGENCY:** Office of Policy Development and Research, HUD.

**ACTION:** Notice.

**SUMMARY:** The proposed information collection requirement described below will be submitted to the Office of Management and Budget (OMB) for review, as required by the Paperwork Reduction Act. The Department is soliciting public comments on the subject proposal.

**DATES:** January 30, 2004.

**ADDRESSES:** Interested persons are invited to submit comments regarding this proposal. Comments should refer to the proposal by name and/or OMB Control Number and should be sent to: Reports Liaison Officer, Office of Policy Development and Research, Department of Housing and Urban Development, 451 7th Street, SW., Room 8226, Washington, DC 20410.

**FOR FURTHER INFORMATION CONTACT:** Marie Lihn, Economic and Market Analysis Division, Office of Policy Development and Research, Department of Housing and Urban Development, 451 7th Street, SW., Room 8222, Washington, DC 20410; telephone (202) 708–0614; e-mail *marie_I._lihn@hud.gov.* This is not a toll-free number. Copies of the proposed forms and other available documents submitted to OMB may be obtained from Ms. Lihn.

**SUPPLEMENTARY INFORMATION:** The Department of Housing and Urban Development will submit the proposed information collection package to OMB for review as required by the Paperwork Reduction Act of 1995 (44 U.S.C. chapter 35, as amended).

This Notice is soliciting comments from members of the public and affected agencies concerning the proposed collection of information to: (1) Evaluate whether the proposed collection of information is necessary for the proper performance of the functions of the agency, including whether the information will have practical utility; (2) Evaluate the accuracy of the agency's estimate of the burden of the proposed collection of information; (3) Enhance the quality, utility, and clarity of the information to be collected; and (4) Minimize the burden of the collection of information on those who are to respond; including the use of appropriate automated collection techniques or other forms of information technology, e.g., permitting electronic submission of responses.

This Notice also lists the following information:

*Title of Proposal:* Project Rent Survey for Update of Section 8 Fair Market Rents.

*Description of the need for the information and proposed use:* HUD is testing a new methodology to determine if it can be used in place of telephone random digit dialing (RDD) surveys of individuals. HUD currently contracts with a private company to conduct two types of RDD surveys: (1) Approximately 50 individual fair market rent (FMR) areas are surveyed every year to test the accuracy of their FMRs; (2) In addition, 20 RDD surveys are conducted every year to provide updating factors for FMRs not surveyed individually and for Annual Adjustment Factors (AAFs). These surveys are conducted in the non-metropolitan portions of all 10 HUD regions, and in the 10 metropolitan portions of the regions that do not have their own Consumer Price Index (CPI) surveys. While RDD telephone surveys have been used for several years to adjust FMRs, these surveys are becoming more difficult and more costly to conduct. This survey of project rents would replace both the regional and area telephone RDDs with surveys of approximately 30 standard rental projects in 200 areas. These project surveys would provide regional change factors for updating the FMRs and specific change factors will be calculated for FMR areas where the Section 8 program is not working properly. It is unlikely than one-fourth of the 200 areas would ever have to be surveyed in a given year, so this request is being made on this maximum amount of 50 areas. In the study of project rents currently underway, using only purchased data, it is clear that data can be purchased for most metropolitan areas.

The survey will be conducted in the field by qualified rental appraisers with the project management staff. In each area, 30 rental projects will be surveyed and questions will cover rent, age of structure, utilities, number and size of units, and recent changes to the area. The survey form has 31 questions, but the appraiser should be able to answer almost one-third by site inspection. The interview with the resident manager should take up, at most 7 minutes to complete.

This new method would be a fast, inexpensive way to update Section 8 Fair Market Rents (FMRs). This new method would only provide estimates of annual rent changes, not actual rents, as the current area RDD survey does. Section 8(C)(1) of the United States Housing Act of 1937 requires the Secretary to publish Fair Market Rents (FMRs) annually to be effective on October 1 of each year. FMRs are used for the Section 8 Rental Certificate Program (including space rentals by owners of manufactured homes under that program); the Moderate Rehabilitation Single Room Occupancy program; housing assisted under the Loan Management and Property Disposition programs; payment standards for the Rental Voucher program; and any other programs whose regulations specify their use.

*Members of affected public:* Managers of rental projects.

*Estimation of the total numbers of hours needed to prepare the information collection including number of respondents, frequency of response, and hours of response:*

| Type of survey | Number of interviews | Average minutes each | Total minutes | Total hours |
|---|---|---|---|---|
| Field Interviews | 1,500 | 7 | 10,500 | 1,313 |

*Status of the proposed information collection:* Pending OMB approval.

**Authority:** The Paperwork Reduction Act of 1995, 44 U.S.C. chapter 35, as amended; and section 8(C)(1) of the United States Housing Act of 1937.

Dated: November 17, 2003.

**Darlene F. Williams,**

*General Deputy Assistant, Secretary for Policy Development and Research.*

[FR Doc. 03–29748 Filed 11–28–03; 8:45 am]

**BILLING CODE 4210–62–M**

## DEPARTMENT OF THE INTERIOR

### Office of the Secretary

### Invasive Species Advisory Committee; Request for Nominations

**AGENCY:** Office of the Secretary, Interior.

**ACTION:** Request for nominations.

**SUMMARY:** The U.S. Department of the Interior, on behalf of the interdepartmental National Invasive Species Council, proposes to appoint new members to the Invasive Species Advisory Committee (ISAC). The Secretary of the Interior, acting as administrative lead, is requesting nominations for qualified persons to serve as members of the ISAC.

**DATES:** Nominations must be received by December 31, 2003.

**ADDRESSES:** Nominations should be sent to Lori Williams, Executive Director, National Invasive Species Council (OS/SIO/NISC), 1849 C Street NW., Washington, DC 20240.

**FOR FURTHER INFORMATION CONTACT:** Kelsey Brantley, Program Analyst, at (202) 513–7243, fax: (202) 371–1751, or by e-mail at *Kelsey_Brantley@ios.doi.gov.*

**SUPPLEMENTARY INFORMATION:**

#### Advisory Committee Scope and Objectives

The purpose and role of the ISAC are to provide advice to the Invasive Species Council (Council), as authorized by Executive Order 13112, on a broad array of issues including preventing the introduction of invasive species, providing for their control, and minimizing the economic, ecological, and human health impacts that invasive species cause. The Council is Co-chaired by the Secretaries of the Interior, Agriculture, and Commerce. The duty of the Council is to provide national leadership regarding invasive species issues. Pursuant to the Executive Order, the Council developed a National Invasive Species Management Plan. The Plan is available on the web at *http://www.invasivespecies.gov.* The Council is responsible for effective implementation of the Plan. The Council coordinates Federal agency activities concerning invasive species; prepares, revises, and issues the National Invasive Species Management Plan; encourages planning and action at local, tribal, State, regional and ecosystem-based levels; develops recommendations for international cooperation in addressing invasive species; facilitates the development of a coordinated network to document, evaluate, and monitor impacts from invasive species; and facilitates establishment of an information-sharing system on invasive species that utilizes, to the greatest extent practicable, the Internet.

The role of ISAC is to maintain an intensive and regular dialogue regarding the aforementioned issues. ISAC provides advice in cooperation with stakeholders and existing organizations addressing invasive species. The ISAC meets up to four (4) times per year.

Terms for approximately half of the current members of the ISAC will expire at the end of 2003. Current members of the ISAC are eligible for reappointment. The Secretary of the Interior will appoint members to ISAC in consultation with the Secretaries of Agriculture and Commerce. The Secretary of Interior actively solicits new nominees to the ISAC. Members of ISAC should be knowledgeable in and represent one or more of the following communities of interests: Weed science; fisheries science; rangeland management; forest science; entomology; nematology; plant pathology; veterinary medicine; the broad range of farming or agricultural practices; biodiversity issues; applicable laws and regulations relevant to invasive species policy; risk assessment; biological control of invasive species; public health/epidemiology; industry activities, structure, and international affairs or trade; tribal or state government interests; environmental education; ecosystem monitoring; natural resource database design and integration; and internet-based management of conservation issues.

Members should also have practical experience in one or more of the following areas: Representing sectors of the national economy that are significantly threatened by biological invasions (*e.g.* agriculture, fisheries, public utilities, recreational users, tourism, etc.); representing sectors of the national economy whose routine operations may pose risks of new or expanded biological invasions (*e.g.* shipping, forestry, horticulture, aquaculture, pet trade, etc.); developing natural resource management plans on regional or ecosystem-level scales; addressing invasive species issues, including prevention, control and monitoring, in multiple ecosystems and on multiple scales; integrating science and the human dimension in order to create effective solutions to complex conservation issues including education, outreach, and public relations experts; coordinating diverse groups of stakeholders to resolve complex environmental issues and conflicts; and complying with NEPA and other federal requirements for public involvement in major conservation plans. Members will be selected in order to achieve a balanced representation of viewpoints, so to effectively address invasive species issues under consideration. No member may serve on the ISAC for more than three (3) consecutive terms. All terms will be limited to two (2) years in length.

Members of the ISAC and its subcommittees serve without pay. However, while away from their homes or regular places of business in the performance of services of the ISAC, members shall be allowed travel expenses, including per diem in lieu of subsistence, in the same manner as persons employed intermittently in the government service, as authorized by section 5703 of Title 5, United States Code.

#### Submitting Nominations

Nominations should be typed and should include the following:

1. A brief summary of no more than two (2) pages explaining the nominee's suitability to serve on the ISAC.
2. A resume or curriculum vitae.
3. Letters of reference.

Nominations should be sent no later than 45 days after the **Federal Register** notice, to Lori Williams, National Invasive Species Council (OS/SIO/NISC), 1849 C Street NW, Washington, DC 20240.

To ensure that recommendations of the ISAC take into account the needs of the diverse groups served, the Department of the Interior is actively soliciting nominations of qualified minorities, women, persons with disabilities and members of low income populations.

Dated: November 24, 2003.

**James Tate, Jr.,**

*Science Advisor to the Secretary of the Interior.*

[FR Doc. 03–29842 Filed 11–28–03; 8:45 am]

**BILLING CODE 4310–RK–P**

## DEPARTMENT OF THE INTERIOR

### National Park Service

### Notice of Inventory Completion: American Museum of Natural History, New York, NY

**AGENCY:** National Park Service, Interior.

**ACTION:** Notice.

Notice is here given in accordance with the Native American Graves Protection and Repatriation Act (NAGPRA), 25 U.S.C. 3003, of the completion of an inventory of human remains and associated funerary objects in the possession of the American Museum of Natural History, New York, NY. The human remains and associated funerary objects were removed from Lower Memaloose Island, Wasco County, OR, and Upper Memaloose Island, Klickitat County, WA.

This notice is published as part of the National Park Service(s administrative responsibilities under NAGPRA, 25 U.S.C. 3003 (d)(3). The determinations within this notice are the sole responsibility of the museum, institution, or Federal agency that has control of the Native American human remains and associated funerary objects. The National Park Service is not responsible for the determinations within this notice.

A detailed assessment of the human remains was made by American Museum of Natural History professional staff in consultation with representatives of the Confederated Tribes and Bands of the Yakama Indian Nation, Washington; Confederated Tribes of the Chehalis Reservation, Washington; Confederated Tribes of the Colville Reservation, Washington; Confederated Tribes of the Grand Ronde Community of Oregon; Confederated Tribes of the Warm Springs Reservation of Oregon; Hoh Indian Tribe of the Hoh Indian Reservation, Washington; Jamestown S'Klallam Tribe of Washington; Lower Elwha Tribal Community of the Lower Elwha Reservation, Washington; Lummi Tribe of the Lummi Reservation, Washington; Makah Indian Tribe of the Makah Indian Reservation, Washington; Muckleshoot Indian Tribe of the Muckleshoot Reservation, Washington; Nisqually Indian Tribe of the Nisqually Reservation, Washington; Nooksack Indian Tribe of Washington; Port Gamble Indian Community of the Port Gamble Reservation, Washington; Puyallup Tribe of the Puyallup Reservation, Washington; Quileute Tribe of the Quileute Reservation, Washington; Quinault Tribe of the Quinault Reservation, Washington; Samish Indian Tribe, Washington; Shoalwater Bay Tribe of the Shoalwater Bay Indian Reservation, Washington; Skokomish Indian Tribe of the Skokomish Reservation, Washington; Squaxin Island Tribe of the Squaxin Island Reservation, Washington; Stillaguamish Tribe of Washington; Swinomish Indians of the Swinomish Reservation, Washington; Tulalip Tribes of the Tulalip Reservation, Washington; and Upper Skagit Indian Tribe of Washington.

In 1870, human remains representing a minimum of four individuals were removed from Memaloose Island, Columbia River, in the vicinity of The Dalles, OR, by Dr. Joseph Simms. It is unclear from museum records whether the human remains came from Upper Memaloose Island, Klickatat County, WA, or Lower Memaloose Island, Wasco County, OR. Dr. Simms donated the human remains and 9 of the 13 associated funerary objects to the American Museum of Natural History in 1872. In 1903, Dr. Simms donated the four remaining associated funerary objects to the museum. No known individuals were identified. The 13 associated funerary objects are 2 copper kettles, 4 strings of beads, 2 bracelets, 2 blanket pieces, and 3 leather wrapping pieces.

In 1882, human remains representing a minimum of three individuals were removed from the Columbia River in the vicinity of The Dalles, Wasco County, OR, by James Terry. The human remains were purchased by the American Museum of Natural History from Mr. Terry in 1891. Museum records give the actual locality as Tum-Wa-Ta, OR, Lower Memaloose Island(?). No known individuals were identified. No associated funerary objects are present.

In 1887, human remains representing one individual were removed from Lower Memaloose Island, Columbia River, Wasco County, OR, by J. Hageny. James Terry acquired these human remains and sold them to the American Museum of Natural History in 1891. No known individual was identified. No associated funerary objects are present.

At an unknown date, human remains representing a minimum of 86 individuals were removed from Upper Memaloose Island, Columbia River, Klickitat County, WA, by George A. Dorsey. In 1905, the American Museum of Natural History purchased the human remains from Mr. Dorsey. No known individuals were identified. No associated funerary objects are present.

At an unknown date, human remains representing a minimum of 42 individuals were removed from Upper Memaloose Island, Columbia River, Klickitat County, WA, by unknown individuals. The human remains came into the possession of George Dorsey, who sold them to F. von Luschan in 1913. In 1924, F. Warburg, acting for F. von Luschan, donated the remains to the American Museum of Natural History. No known individuals were identified. No associated funerary objects are present.

The human remains removed from Memaloose Island in 1870 have been identified as Native American based on the types of associated funerary objects and the presence of cranial deformation observable in two individuals. Material is wrapped around the heads of the other two individuals. The human remains are wrapped in hide and blankets, and date to the postcontact period. Wrapping of the deceased and cranial deformation are consistent with practices of the Chinook- and Sahaptin-speaking groups. The other human remains removed from the Memaloose Islands also have been identified as Native American based on the presence of cranial deformation. The type of cranial deformation exhibited by most of these individuals is common among Chinookan-speakers and far less common among Sahaptin-speakers.

The Memaloose Islands were used by local Native American peoples for the burial of their dead during the postcontact period. The Memaloose Islands are within the traditional territory of Chinook- and Sahaptin-speaking Indian groups represented today by the Confederated Tribes and Bands of the Yakama Indian Nation, Washington and the Confederated Tribes of the Warm Springs Reservation of Oregon. Representatives of the Confederated Tribes of the Grande Ronde, whose membership also includes Chinookan-speakers, have indicated that Upper and Lower Memaloose Islands are outside of its postcontact territory.

Officials of the American Museum of Natural History have determined that, pursuant to 25 U.S.C. 3001 (9–10), the human remains described above represent the physical remains of a minimum of 136 individuals of Native American ancestry. Officials of the American Museum of Natural History also have determined that, pursuant to 25 U.S.C. 3001 (3)(A), the 13 objects described above are reasonably believed to have been placed with or near individual human remains at the time of death or later as part of the death rite or ceremony. Lastly, officials of the American Museum of Natural History have determined that, pursuant to 25 U.S.C. 3001 (2), there is a relationship

of shared group identity that can be reasonably traced between the Native American human remains and associated funerary objects and the Confederated Tribes and Bands of the Yakama Indian Nation, Washington and the Confederated Tribes of the Warm Springs Reservation of Oregon.

Representatives of any other Indian tribe that believes itself to be culturally affiliated with these human remains and associated funerary objects should contact Luc Litwinionek, Director of Cultural Resources, American Museum of Natural History, Central Park West at 79th Street, New York, NY 10024–5192, telephone (212) 769–5846, before December 31, 2003. Repatriation of the human remains and associated funerary objects to the Confederated Tribes and Bands of the Yakama Indian Nation, Washington and Confederated Tribes of the Warm Springs Reservation of Oregon may proceed after that date if no additional claimants come forward.

The American Museum of Natural History is responsible for notifying the Confederated Tribes and Bands of the Yakama Indian Nation, Washington; Confederated Tribes of the Chehalis Reservation, Washington; Confederated Tribes of the Colville Reservation, Washington; Confederated Tribes of the Grand Ronde Community of Oregon; Confederated Tribes of the Warm Springs Reservation of Oregon; Hoh Indian Tribe of the Hoh Indian Reservation, Washington; Jamestown S'Klallam Tribe of Washington; Lower Elwha Tribal Community of the Lower Elwha Reservation, Washington; Lummi Tribe of the Lummi Reservation, Washington; Makah Indian Tribe of the Makah Indian Reservation, Washington; Muckleshoot Indian Tribe of the Muckleshoot Reservation, Washington; Nisqually Indian Tribe of the Nisqually Reservation, Washington; Nooksack Indian Tribe of Washington; Port Gamble Indian Community of the Port Gamble Reservation, Washington; Puyallup Tribe of the Puyallup Reservation, Washington; Quileute Tribe of the Quileute Reservation, Washington; Quinault Tribe of the Quinault Reservation, Washington; Samish Indian Tribe, Washington; Shoalwater Bay Tribe of the Shoalwater Bay Indian Reservation, Washington; Skokomish Indian Tribe of the Skokomish Reservation, Washington; Squaxin Island Tribe of the Squaxin Island Reservation, Washington; Stillaguamish Tribe of Washington; the Swinomish Indians of the Swinomish Reservation, Washington; Tulalip Tribes of the Tulalip Reservation, Washington; and Upper Skagit Indian Tribe of Washington that this notice has been published.

Dated: October 24, 2003.

**John Robbins,**

*Assistant Director, Cultural Resources.*

[FR Doc. 03–29768 Filed 11–28–03; 8:45 am]

BILLING CODE 4310–50–S

## DEPARTMENT OF THE INTERIOR

### National Park Service

### Notice of Inventory Completion: The Colorado College, Colorado Springs, CO

**AGENCY:** National Park Service, Interior.

**ACTION:** Notice.

Notice is here given in accordance with the Native American Graves Protection and Repatriation Act (NAGPRA), 25 U.S.C. 3003, of the completion of an inventory of human remains in the possession of The Colorado College, Colorado Springs, CO. The human remains were removed from Adams County, CO.

This notice is published as part of the National Park Service's administrative responsibilities under NAGPRA, 25 U.S.C. 3003 (d)(3). The determinations within this notice are the sole responsibility of the museum, institution, or Federal agency that has control of the Native American human remains. The National Park Service is not responsible for the determinations within this notice.

A detailed assessment of the human remains was made by The Colorado College professional staff in consultation with representatives of Apache Tribe of Oklahoma; Arapahoe Tribe of the Wind River Reservation, Wyoming; Cheyenne-Arapaho Tribes of Oklahoma; Comanche Nation, Oklahoma; Fort Sill Apache Tribe of Oklahoma; Jicarilla Apache Nation, New Mexico; Kiowa Indian Tribe of Oklahoma; Mescalero Apache Tribe of the Mescalero Reservation, New Mexico; Northern Cheyenne Tribe of the Northern Cheyenne Indian Reservation, Montana; Pawnee Nation of Oklahoma; Southern Ute Indian Tribe of the Southern Ute Reservation, Colorado; Ute Indian Tribe of the Uintah & Ouray Reservation, Utah; and Ute Mountain Tribe of the Ute Mountain Reservation, Colorado, New Mexico & Utah.

On August 7, 1985, human remains representing one individual were removed from private land approximately 8 miles east of Byers, Adams County, CO, by the Adams County Coroner's Office. After investigation determined that there was no forensic significance, the human remains were transported to The Colorado College Physical Anthropology Laboratory in Palmer Hall for curation and educational purposes (Accession no. CCO #85–321). In 1989, the human remains were moved to the Biological Anthropology Research Laboratory in Barnes Science Center. No known individuals were identified. No associated funerary objects are present. Cranial morphology indicates that the remains are Native American.

The map ''Indian Land Areas Judicially Established 1978'' includes Adams County in the land aboriginally occupied by the Cheyenne and Arapaho tribes. The map ''Early Indian Tribes, Culture Areas, and Linguistic Stocks'' establishes the presence of the Arapaho and Ute tribes in the area at the time of contact. The Colorado Office of Archaeology and Historic Preservation map ''Estimated Tribal Territories in Colorado During the Late Nineteenth Century'' shows the presence of the Apache, Arapaho, Cheyenne, Comanche, and Kiowa tribes in all of eastern Colorado, including Adams County. The Southern Ute Indian Tribe map ''Original Ute Domain'' includes Adams County as a part of the original domain of the Ute. Official tribal representatives provided folklore, oral tradition, geographical, and historical evidence of cultural affiliation, all of which indicated that Adams County is a part of their traditional territory.

Officials of The Colorado College have determined that, pursuant to 25 U.S.C. 3001, Sec. 2 (9–10), the human remains listed above represent the physical remains of one individual of Native American ancestry. Officials of The Colorado College also have determined that, pursuant to 25 U.S.C. 3001 (2), there is a relationship of shared group identity that can be reasonably traced between the Native American human remains and the Apache Tribe of Oklahoma; Arapahoe Tribe of the Wind River Reservation, Wyoming; Cheyenne-Arapaho Tribes of Oklahoma; Comanche Nation, Oklahoma; Fort Sill Apache Tribe of Oklahoma; Jicarilla Apache Nation, New Mexico; Kiowa Indian Tribe of Oklahoma; Mescalero Apache Tribe of the Mescalero Reservation, New Mexico; Northern Cheyenne Tribe of the Northern Cheyenne Indian Reservation, Montana; Pawnee Nation of Oklahoma; Southern Ute Indian Tribe of the Southern Ute Reservation, Colorado; Ute Indian Tribe of the Uintah & Ouray Reservation, Utah; and Ute Mountain Tribe of the Ute Mountain Reservation, Colorado, New Mexico & Utah.

Representatives of any other Indian tribe that believes itself to be culturally

affiliated with the human remains should contact Joyce Eastburg, Legal Assistant, The Colorado College, 14 East Cache La Poudre Street, Colorado Springs, CO 80903, telephone (719) 389–6703, before December 31, 2003. Repatriation of the human remains to the Southern Ute Indian Tribe of the Southern Ute Reservation, Colorado may proceed after that date if no additional claimants come forward.

The Colorado College is responsible for notifying the Apache Tribe of Oklahoma; Arapahoe Tribe of the Wind River Reservation, Wyoming; Cheyenne-Arapaho Tribes of Oklahoma; Comanche Nation, Oklahoma; Fort Sill Apache Tribe of Oklahoma; Jicarilla Apache Nation, New Mexico; Kiowa Indian Tribe of Oklahoma; Mescalero Apache Tribe of the Mescalero Reservation, New Mexico; Northern Cheyenne Tribe of the Northern Cheyenne Indian Reservation, Montana; Pawnee Nation of Oklahoma; Southern Ute Indian Tribe of the Southern Ute Reservation, Colorado; Ute Indian Tribe of the Uintah & Ouray Reservation, Utah; and Ute Mountain Tribe of the Ute Mountain Reservation, Colorado, New Mexico & Utah that this notice has been published.

Dated: October 24, 2003.

**John Robbins,**

*Assistant Director, Cultural Resources.*

[FR Doc. 03–29766 Filed 11–28–03; 8:45 am]

**BILLING CODE 4310–50–S**

## DEPARTMENT OF THE INTERIOR

### National Park Service

### Notice of Inventory Completion: U.S. Department of the Interior, U.S. Fish and Wildlife Service, Region 7, Anchorage, AK

**AGENCY:** National Park Service, Interior.

**ACTION:** Notice.

Notice is here given in accordance with the Native American Graves Protection and Repatriation Act (NAGPRA), 25 U.S.C. 3003, of the completion of an inventory of human remains in the possession of the U.S. Department of the Interior, U.S. Fish and Wildlife Service, Region 7, Anchorage, AK. The human remains were removed from Amchitka Island, AK.

This notice is published as part of the National Park Service's administrative responsibilities under NAGPRA, 25 U.S.C. 3003 (d)(3). The determinations within this notice are the sole responsibility of the museum, institution, or Federal agency that has control of the Native American human remains. The National Park Service is not responsible for the determinations within this notice.

A detailed assessment of the human remains was made by U.S. Fish and Wildlife Service, Region 7 professional staff and forensic anthropologists from the Alaska State Office of History and Archaeology, in consultation with representatives of the the Aleut Corporation, Atxam Corporation, and Native Village of Atka.

In 1980, human remains representing a minimum of one individual were removed from an eroding midden site on Amchitka Island, in the Aleutian Islands Unit of the Alaska Maritime National Wildlife Refuge, AK, by a seasonal refuge employee. The human remains were removed to prevent them from being destroyed or stolen during construction activity. No known individual was identified. No funerary objects are present.

There are no radiocarbon dates available for the human remains. Midden sites began to appear approximately 3,000 years ago in the Aleutian Islands. The human remains were found in the upper levels of the site and likely date to the Late Prehistoric period, possibly no earlier than A.D. 1000.

The burial context and physical traits of the human remains are consistent with those observed for precontact Aleut populations. Skeletal morphology of present-day Aleut populations is similar to that of prehistoric populations, and demonstrates biological and cultural affiliation between present-day Aleut groups and prehistoric populations in the Aleutian Islands.

Historical records demonstrate a cultural affiliation between the late prehistoric populations on Amchitka Island and the Atxam Corporation and the Native Village of Atka. After Russian contact with the Rat Islands, to which Amchitka Island belongs, began in 1751, the population declined precipitously. By the 1790s, the Rat Islands populations were concentrated on Kiska and Amchitka Islands, and the Russians removed most of the Rat Islands Aleuts to Atka Island in the Andreanof Islands in the central Aleutian Island chain. By 1812, the survivors were returned to Amchitka Island. By 1832, inhabitants of the Rat Islands were again moved to Atka Island or to the Commander Islands, and the Rat Islands, including Amchitka, were never permanently re-occupied. Amchitka Island continued to be used by the people of Atka Island as a hunting ground. In 1920, the Native residents of Atka Island leased Amchitka Island for fox farming. The lease was renewed in 1929 by the Atka Village Community. Atka Island residents continued to use Amchitka Island until the Japanese invasion of the western Aleutians in 1942 during World War II. Aleut Atka residents are represented by the Native Village of Akta and Atxam Corporation.

Officials of the U.S. Fish and Wildlife Service, Region 7 have determined that, pursuant to 25 U.S.C. 3001, (9–10), the human remains listed above represent the physical remains of one individual of Native American ancestry. Officials of the U.S. Fish and Wildlife Service, Region 7 also have determined that, pursuant to 25 U.S.C. 3001 (2), there is a relationship of shared group identity that can be reasonably traced between the Native American human remains and the Atxam Corporation and the Native Village of Atka.

Representatives of any other Indian tribe that believes itself to be culturally affiliated with the human remains should contact Debra Corbett, U.S. Fish and Wildlife Service, 1011 East Tudor Road, Anchorage, AK 99503, telephone (907) 786–3399, before December 31, 2003. Repatriation of the human remains to the Atxam Corporation and the Native Village of Atka may proceed after that date if no additional claimants come forward.

The U.S. Fish and Wildlife Service, Region 7 is responsible for notifying the Aleut Corporation, Atxam Corporation, and the Native Village of Atka that this notice has been published.

Dated: September 17, 2003.

**John Robbins,**

*Assistant Director, Cultural Resources.*

[FR Doc. 03–29773 Filed 11–28–03; 8:45 am]

**BILLING CODE 4310–50–S**

## DEPARTMENT OF THE INTERIOR

### National Park Service

### Notice of Inventory Completion: Illinois State Museum, Springfield, IL

**AGENCY:** National Park Service, Interior.

**ACTION:** Notice.

Notice is here given in accordance with the Native American Graves Protection and Repatriation Act (NAGPRA), 25 U.S.C. 3003, of the completion of an inventory of human remains in the possession of the Illinois State Museum, Springfield, IL. The human remains were removed from two sites in Randolph County, IL.

This notice is published as part of the National Park Service's administrative responsibilities under NAGPRA, 25 U.S.C. 3003 (d)(3). The determinations

within this notice are the sole responsibility of the museum, institution, or Federal agency that has control of the Native American human remains. The National Park Service is not responsible for the determinations within this notice.

A detailed assessment of the human remains was made by Illinois State Museum professional staff in consultation with representatives of the Citizen Potawatomi Nation, Oklahoma; Forest County Potawatomi Community, Wisconsin; Hannahville Indian Community, Michigan; Ho-Chunk Nation of Wisconsin; Huron Potawatomi, Inc., Michigan; Kickapoo Traditional Tribe of Texas; Kickapoo Tribe of Indians of the Kickapoo Reservation in Kansas; Kickapoo Tribe of Oklahoma; Miami Tribe of Oklahoma; Peoria Tribe of Indians of Oklahoma; Pokagon Band of Potawatomi Indians, Michigan and Indiana; Prairie Band of Potawatomi Nation, Kansas; Sac & Fox Nation of Missouri in Kansas and Nebraska; Sac & Fox Nation, Oklahoma; Sac & Fox Tribe of the Mississippi in Iowa; and Winnebago Tribe of Nebraska.

In the late 1960s, human remains representing a minimum of five individuals were removed from the Waterman site (11R122), Randolph County, IL, by Irvin M. Peithman of Southern Illinois University at Carbondale. The Peithman family donated the human remains to the Fort de Chartres State Historic Site, Illinois Historic Preservation Agency in the early 1980s. In 1988, the Illinois Historic Preservation Agency transferred the human remains to the Illinois State Museum. No known individuals were identified. No associated funerary objects are present.

The morphology of the human remains indicates that the individuals from the Waterman site are clearly Native American. The Waterman site is a historically documented Michigamea Indian village that was occupied between 1753 and 1765. The Michigamea were part of the Illinois Indians who are represented by the present-day Peoria Tribe of Indians of Oklahoma. In 1998, the Illinois State Museum repatriated the remains of 57 individuals and 13,113 associated funerary objects from the Waterman site to the Peoria Tribe of Indians of Oklahoma.

Between 1979 and 1982, human remains representing one individual were removed from the Fort de Chartres III site (11R127), Randolph County, IL, by Dr. Melburn Thurman of the Old Missouri Research Foundation. The human remains were transferred to the Illinois State Museum in 1988. No known individual was identified. No associated funerary objects are present.

Historical evidence and site location indicate that the human remains from the Fort de Chartres III site are clearly Native American. Based on the burial location and the presence of European trade goods at adjacent burial sites, the human remains were likely interred between 1772 and 1832. The Fort de Chartres III site is located 1 mile south of the Waterman site, a historically documented Michigamea Indian village that was occupied between 1753 and 1765. The Michigamea were part of the Illinois Indians who are represented by the present-day Peoria Tribe of Indians of Oklahoma. In 1998, the Illinois State Museum repatriated the remains of 8 individuals and 9,834 associated funerary objects from the Fort de Chartres III site to the Peoria Tribe of Indians of Oklahoma.

Officials of the Illinois State Museum have determined that, pursuant to 25 U.S.C. 3001 (9–10), the human remains described above represent the physical remains of six individuals of Native American ancestry. Officials of the Illinois State Museum also have determined that, pursuant to 25 U.S.C. 3001 (2), there is a relationship of shared group identity that can be reasonably traced between the Native American human remains and the Peoria Tribe of Indians of Oklahoma.

Representatives of any other Indian tribe that believes itself to be culturally affiliated with the human remains should contact Dr. Robert E. Warren, Associate Curator of Anthropology, Illinois State Museum, 1011 East Ash Street, Springfield, IL, telephone (217) 524–7903, before December 31, 2003. Repatriation of the human remains to the Peoria Tribe of Indians of Oklahoma may proceed after that date if no additional claimants come forward.

The Illinois State Museum is responsible for notifying the Citizen Potawatomi Nation, Oklahoma; Forest County Potawatomi Community, Wisconsin; Hannahville Indian Community, Michigan; Ho-Chunk Nation of Wisconsin; Huron Potawatomi, Inc., Michigan; Kickapoo Traditional Tribe of Texas; Kickapoo Tribe of Indians of the Kickapoo Reservation in Kansas; Kickapoo Tribe of Oklahoma; Miami Tribe of Oklahoma; Peoria Tribe of Indians of Oklahoma; Pokagon Band of Potawatomi Indians, Michigan and Indiana; Prairie Band of Potawatomi Nation, Kansas; Sac & Fox Nation of Missouri in Kansas and Nebraska; Sac & Fox Nation, Oklahoma; Sac & Fox Tribe of the Mississippi in Iowa; and Winnebago Tribe of Nebraska that this notice has been published.

Dated: September 22, 2003.

**John Robbins,**

*Assistant Director, Cultural Resources.*

[FR Doc. 03–29775 Filed 11–28–03; 8:45 am]

**BILLING CODE 4310–50–S**

---

## DEPARTMENT OF THE INTERIOR

### National Park Service

### Notice of Inventory Completion: U.S. Department of the Interior, Bureau of Reclamation, Lower Colorado Region, Phoenix Area Office, Phoenix, AZ

**AGENCY:** National Park Service, Interior.

**ACTION:** Notice.

Notice is here given in accordance with the Native American Graves Protection and Repatriation Act (NAGPRA), 25 U.S.C. 3003, of the completion of an inventory of human remains and associated funerary objects in the possession of the U.S. Department of the Interior, Bureau of Reclamation, Lower Colorado Region, Phoenix Area Office, Phoenix, AZ. The human remains and associated funerary objects were removed from site AZ AA:6:19(ASM), in the Santa Cruz Flats, Pinal County, AZ.

This notice is published as part of the National Park Service's administrative responsibilities under NAGPRA, 25 U.S.C. 3003 (d)(3). The determinations within this notice are the sole responsibility of the museum, institution, or Federal agency that has control of the Native American human remains and associated funerary objects. The National Park Service is not responsible for the determinations within this notice.

A detailed assessment of the human remains was made by Bureau of Reclamation, Lower Colorado Region, Phoenix Area Office professional staff in consultation with representatives of the Ak Chin Indian Community of the Ak Chin Indian Reservation, Arizona; Chemehuevi Indian Tribe of the Chemehuevi Reservation, California; Cocopah Tribe of Arizona; Colorado River Indian Tribes of the Colorado Indian Reservation, Arizona and California; Fort McDowell Yavapai Nation, Arizona; Fort Mojave Indian Tribe of Arizona, California & Nevada; Gila River Indian Community of the Gila River Indian Reservation, Arizona; Hopi Tribe of Arizona; Pasqua Yaqui Tribe of Arizona; Quechan Tribe of the Fort Yuma Indian Reservation, California & Arizona; Salt River Pima-Maricopa Indian Community of the Salt River Reservation, Arizona; San Carlos Apache Tribe of the San Carlos

Reservation, Arizona; Tohono O'odham Nation of Arizona (including the San Xavier District of the Tohono O'odham Nation of Arizona); Tonto Apache Tribe of Arizona; White Mountain Apache Tribe of the Fort Apache Reservation, Arizona; Yavapai-Apache Nation of the Camp Verde Indian Reservation, Arizona; Yavapai-Prescott Tribe of the Yavapai Reservation, Arizona; and Zuni Tribe of the Zuni Reservation, New Mexico.

In 1987, human remains representing a minimum of six individuals were removed from site AZ AA:6:19(ASM) during legally authorized data recovery efforts undertaken by Northland Research, Inc., for the Bureau of Reclamation. The site is located in the Santa Cruz Flats, just north of the Silver Bell Mountains in Pinal County, AZ. No known individuals were identified. The 21 associated funerary objects are 1 ground stone fragment, 3 bags of chipped stone flakes, 3 bags of unworked faunal bone, 1 bag of unworked shell, 2 bags of worked shell (consisting of 811 shell beads plus fragments), 3 radiocarbon samples, 2 flotation samples (in 5 bags), and 6 pollen samples.

On the basis of archeological context, architectural, chronometric, and artifactual evidence, the site dates to the Late Archaic period (1500 B.C.- A.D. 1).

Evidence provided by anthropological, archeological, biological, geographical, historical, kinship, linguistics, and oral tradition sources was considered in determining the cultural affiliation of the human remains and associated funerary objects. Bureau of Reclamation, Lower Colorado Region, Phoenix Area Office officials have determined that, pursuant to 43 CFR 10.2 (e), the preponderance of the evidence suggests that a relationship of shared group identity can be traced between the historic O'odham groups, represented by the present-day Indian tribes of the Ak Chin Indian Community of the Ak Chin Indian Reservation, Arizona; Gila River Indian Community of the Gila River Indian Reservation, Arizona; Salt River Pima-Maricopa Indian Community of the Salt River Reservation, Arizona; and Tohono O'odham Nation of Arizona (including the San Xavier District of the Tohono O'odham Nation of Arizona), and the prehistoric Late Archaic groups that occupied the Santa Cruz River valley and surrounding areas.

There is a growing amount of archeological data that suggests a local continuum between Late Archaic populations and the Hohokam, a later prehistoric group with recognized affiliation to the O'odham. The cultural continuum is demonstrated by an increase in sedentism; establishment of pithouse settlements; adoption of agriculture; development of ceramic, ground stone, and shell manufacturing technology; and increased participation in nonlocal trade.

The O'odham were well established along the rivers and in the deserts when the Spanish first arrived in northern Sonora and southern Arizona. Oral traditions tell of early groups that were present before the adoption of agriculture, and refer to the introduction of several cultivated crops. O'odham traditions are also deeply embedded in the geography of southern Arizona, with events taking place at specific landmarks within traditional O'odham lands. The O'odham consider the Hohokam and their predecessors to be O'odham ancestors. Although the O'odham belong to the same linguistic group (Piman) as communities in what is now northern Mexico, shared vocabulary and syntax with Yuman language groups along the Colorado River suggests a long-term history of interaction in what is now southern Arizona that stretches back into prehistoric times.

Evidence suggests that the Hopi and Zuni are also culturally affiliated with the Hohokam and their predecessors. Their ancestors had trade relationships and other likely interactions with the Hohokam, similar to those found between groups in the early historic period. Hopi and Zuni oral traditions indicate that segments of the prehistoric Hohokam population migrated to the areas occupied by the Hopi and Zuni and were assimilated into the resident populations. A cultural continuum between Late Archaic groups in the Santa Cruz Valley and the later Hohokam suggests that the Hopi and Zuni are also affiliated with the Late Archaic populations.

Officials of the Bureau of Reclamation, Lower Colorado Region, Phoenix Area Office have determined that, pursuant to 25 U.S.C. 3001 (9–10), the human remains described above represent the physical remains of at least six individuals of Native American ancestry. Officials of the Bureau of Reclamation, Lower Colorado Region, Phoenix Area Office also have determined that, pursuant to 25 U.S.C. 3001 (3)(A), the 21 objects described above are reasonably believed to have been placed with or near individual human remains at the time of death or later as part of the death rite or ceremony. Lastly, officials of the Bureau of Reclamation, Lower Colorado Region, Phoenix Area Office have determined that, pursuant to 25 U.S.C. 3001 (2), there is a relationship of shared group identity that can be reasonably traced between the Native American human remains and associated funerary objects and the Ak Chin Indian Community of the Ak Chin Indian Reservation, Arizona; Gila River Indian Community of the Gila River Indian Reservation, Arizona; Hopi Tribe of Arizona; Salt River Pima-Maricopa Indian Community of the Salt River Reservation, Arizona; Tohono O'odham Nation of Arizona (including the San Xavier District of the Tohono O'odham Nation of Arizona), and Zuni Tribe of the Zuni Reservation, New Mexico.

Representatives of any other Indian tribe that believes itself to be culturally affiliated with these human remains and associated funerary objects should contact Jon Czaplicki or Bruce Ellis, Bureau of Reclamation, Phoenix Area Office, P.O. Box 81169, Phoenix, AZ 85069–1169, telephone (602) 216–3862, before December 31, 2003. Repatriation of the human remains and associated funerary objects to the Ak Chin Indian Community of the Ak Chin Indian Reservation, Arizona; Gila River Indian Community of the Gila River Indian Reservation, Arizona; Hopi Tribe of Arizona; Salt River Pima-Maricopa Indian Community of the Salt River Reservation, Arizona; Tohono O'odham Nation of Arizona (including the San Xavier District of the Tohono O'odham Nation of Arizona); and Zuni Tribe of the Zuni Reservation, New Mexico may proceed after that date if no additional claimants come forward.

The Bureau of Reclamation, Lower Colorado Region, Phoenix Area Office is responsible for notifying the Ak Chin Indian Community of the Ak Chin Indian Reservation, Arizona; Chemehuevi Indian Tribe of the Chemehuevi Reservation, California; Cocopah Tribe of Arizona; Colorado River Indian Tribes of the Colorado Indian Reservation, Arizona and California; Fort McDowell Yavapai Nation, Arizona; Fort Mojave Indian Tribe of Arizona, California & Nevada; Gila River Indian Community of the Gila River Indian Reservation, Arizona; Hopi Tribe of Arizona; Pasqua Yaqui Tribe of Arizona; Quechan Tribe of the Fort Yuma Indian Reservation, California & Arizona; Salt River Pima-Maricopa Indian Community of the Salt River Reservation, Arizona; San Carlos Apache Tribe of the San Carlos Reservation, Arizona; Tohono O'odham Nation of Arizona (including the San Xavier District of the Tohono O'odham Nation of Arizona); Tonto Apache Tribe of Arizona; White Mountain Apache Tribe of the Fort Apache Reservation, Arizona; Yavapai-Apache Nation of the

Camp Verde Indian Reservation, Arizona; Yavapai-Prescott Tribe of the Yavapai Reservation, Arizona; and Zuni Tribe of the Zuni Reservation, New Mexico that this notice has been published.

Dated: October 27, 2003.

**John Robbins,**

*Assistant Director, Cultural Resources.*

[FR Doc. 03–29770 Filed 11–28–03; 8:45 am]

**BILLING CODE 4310–50–S**

## DEPARTMENT OF THE INTERIOR

## National Park Service

## Notice of Intent to Repatriate Cultural Items: Kansas State Historical Society, Topeka, KS

**AGENCY:** National Park Service, Interior.

**ACTION:** Notice.

Notice is here given in accordance with Native American Graves Protection and Repatriation Act (NAGPRA) regulations, 43 CFR10.8 (f), of the intent to repatriate five cultural items in the possession of the Kansas State Historical Society, Topeka, KS, that meet the definition of ''objects of cultural patrimony'' under 25 U.S.C. 3001.

This notice is published as part of the National Park Service's administrative responsibilities under NAGPRA, 25 U.S.C. 3003 (d)(3). The determinations within this notice are the sole responsibility of the museum, institution, or Federal agency that has control of the cultural items. The National Park Service is not responsible for the determinations within this notice.

The five cultural items are a medicine outfit, a ceremonial sash, a set of feathers in a feather case, a set of wampum beads, and a medicine love charm. All of these items were purchased by the Kansas State Historical Society in 1956 from the Logan Museum of Anthropology, Beloit College, Beloit, WI.

The medicine outfit consists of a small metal can surrounded by a thong from which hang four large claws separated by brass beads. The upper portion of the can is covered with a piece of dark blue cotton cloth. The letter of transfer from the Logan Museum of Anthropology identified the item as a ''Sac and Fox medicine outfit.''

The ceremonial sash is a woven band 1.5 m long and 18 cm wide made of multicolored wool yarn. It has a lightning design that was identified by Sac & Fox Nation of Missouri in Kansas and Nebraska, Sac & Fox Nation of Oklahoma, and Sac & Fox Tribe of the Mississippi in Iowa representatives as associated with upper-level or leading clans of the Sac and Fox tribes. The letter of transfer from the Logan Museum of Anthropology identified the item as a ''Sac and Fox sash.''

The feathers and feather case consist of a set of turkey feathers contained within two hollow sections of wood with rounded ends that slide together to form a case 45 cm long and 13 cm wide. The letter of transfer from the Logan Museum of Anthropology identified the item as a ''Sac and Fox feather case.''

The wampum beads consist of a set of black and white tubular glass beads strung on three looped strands of cotton cord approximately 1.0 m long tied with a thong at one end. The letter of transfer from the Logan Museum of Anthropology identified the item as ''Sac and Fox wompum [sic].''

The medicine love charm consists of a strand of glass beads of mixed colors and sizes strung on a thong with a small brass thimble at one end carrying four orange- and tan-colored satin ribbons, accompanied by a small cotton bag bearing a red and black-pattern design tied with a leather thong. The letter of transfer from the Logan Museum of Anthropology identifies the item as a ''Sac and Fox medicine love charm.''

On several occasions beginning in 1997, representatives of the Sac & Fox Nation of Missouri in Kansas and Nebraska, the Sac & Fox Nation of Oklahoma, and the Sac & Fox Tribe of the Mississippi in Iowa visited the Kansas State Historical Society to examine the society's collections as part of the NAGPRA consultation process. During the visits, the representatives identified the cultural items described above as objects of cultural patrimony having ongoing historical, traditional, and cultural importance to the Sac and Fox tribes as a whole, and stated that they considered the items to be of such central importance that the items could not have been legitimately alienated, appropriated, or conveyed by any individual. In a letter to the Kansas State Historical Society dated October 17, 2002, the three tribes provided formal indication of their wish to jointly claim those items as objects of cultural patrimony, and for those items to be repatriated to the Sac and Fox Tribe of the Mississippi in Iowa.

Officials of the Kansas State Historical Society have determined that, pursuant to 25 U.S.C. 3001 (3)(D), the cultural items have ongoing historical, traditional, or cultural importance central to the Native American group or culture itself, rather than property owned by an individual. Officials of the Kansas State Historical Society also have determined that, pursuant to 25 U.S.C. 3001 (2), there is a relationship of shared group identity that can be reasonably traced between the cultural items and the Sac & Fox Nation of Missouri in Kansas and Nebraska, the Sac & Fox Nation of Oklahoma, and the Sac & Fox Tribe of the Mississippi in Iowa.

Representatives of any other Indian tribe that believes itself to be culturally affiliated with the objects of cultural patrimony should contact Randall M. Thies, Kansas State Historical Society, 6425 SW Sixth Avenue, Topeka, KS 66615–1099, telephone (785) 272–8681, extension 267, before December 31, 2003. Repatriation of the objects of cultural patrimony to the Sac & Fox Tribe of the Mississippi in Iowa may proceed after that date if no additional claimants come forward.

The Kansas State Historical Society is responsible for notifying the Sac & Fox Nation of Missouri in Kansas and Nebraska, the Sac & Fox Nation of Oklahoma, and the Sac & Fox Tribe of the Mississippi in Iowa that this notice has been published.

Dated: September 17, 2003.

**John Robbins,**

*Assistant Director, Cultural Resources.*

[FR Doc. 03–29774 Filed 11–28–03; 8:45 am]

**BILLING CODE 4310–50–S**

## DEPARTMENT OF THE INTERIOR

## National Park Service

## Notice of Inventory Completion: Longyear Museum of Anthropology, Colgate University, Hamilton, NY

**AGENCY:** National Park Service, Interior.

**ACTION:** Notice.

Notice is here given in accordance with the Native American Graves Protection and Repatriation Act (NAGPRA), 25 U.S.C. 3003, of the completion of an inventory of human remains and associated funerary objects in the possession of Longyear Museum of Anthropology, Colgate University, Hamilton, NY. The human remains and associated funerary objects were removed from Madison and Oneida Counties, NY.

This notice is published as part of the National Park Service's administrative responsibilities under NAGPRA, 25 U.S.C. 3003 (d)(3). The determinations within this notice are the sole responsibility of the museum, institution, or Federal agency that has control of the Native American human remains and associated funerary objects. The National Park Service is not

responsible for the determinations within this notice.

A detailed assessment of the human remains was made by Longyear Museum of Anthropology professional staff in consultation with representatives of the Oneida Nation of New York.

At an unknown date, human remains representing a minimum of one individual were removed from the Buyea site (Ond–13), Smithfield, Madison County, NY, by Herbert Bigford, Sr. In 1959, the Longyear Museum of Anthropology purchased the human remains. No known individual was identified. No associated funerary objects are present.

Occupation of the Buyea site is dated to approximately A.D. 1450.

At an unknown date, human remains representing a minimum of one individual were removed from the Diable site (Msv–2), Stockbridge, Madison County, NY, by Herbert Bigford, Sr. In 1959, the Longyear Museum of Anthropology purchased the human remains. No known individual was identified. No associated funerary objects are present.

Occupation of the Diable site is dated to approximately A.D. 1550–1570.

At an unknown date, human remains representing a minimum of one individual were removed from the Diable site (Msv–2), Stockbridge, Madison County, NY, by Walter Bennett. In 1965, Mr. Bennett donated the human remains to the Longyear Museum of Anthropology. No known individual was identified. No associated funerary objects are present.

At an unknown date, human remains representing a minimum of one individual were removed from the Marshall site (Msv–7), Stockbridge, Madison County, NY, by Herbert Bigford, Sr. In 1959, the Longyear Museum of Anthropology purchased the human remains. No known individual was identified. No associated funerary objects are present.

Occupation of the Marshall site is dated to approximately A.D. 1630–1650.

At an unknown date, human remains representing a minimum of one individual were removed from the Quarry site (Msv–4), Stockbridge, Madison County, NY, by Herbert Bigford, Sr. In 1959, the Longyear Museum of Anthropology purchased the human remains. No known individual was identified. The eight associated funerary objects are one lot of perforated canine teeth, one paint pouch, one lot of wampum beads, iron scissors, one iron knife, one iron axe, one lot of pottery sherds, and one clam shell.

Occupation of the Quarry site is dated to approximately A.D. 1640–1650.

At an unknown date, human remains representing a minimum of one individual were removed from the Thurston site (Msv–1), Stockbridge, Madison County, NY, by Theodore Whitney. In 1980, Mr. Whitney donated the human remains to the Longyear Museum of Anthropology. No known individual was identified. No associated funerary objects are present.

Occupation of the Thurston site is dated to approximately A.D. 1625–1637.

At an unknown date, human remains representing a minimum of one individual were removed from the Lanz-Hogan site (Ond–2), Vernon, Oneida County, NY, by Herbert Bigford, Sr. In 1959, the Longyear Museum of Anthropology purchased the human remains. No known individual was identified. No associated funerary objects are present.

Occupation of the Lanz-Hogan site is dated to approximately A.D. 1720–1750.

The sites from which the human remains and associated funerary objects were removed are located in the aboriginal territory of the Oneida Iroquois, and the dates of occupation correspond to a time when the Oneida Iroquois are known, from historical sources, to have occupied the region. Consultation with representatives of the Oneida Nation of New York confirmed cultural affiliation of the human remains and associated funerary objects with the Oneida Iroquois, who are ancestral to the Oneida Nation of New York.

Officials of the Longyear Museum of Anthropology have determined that, pursuant to 25 U.S.C. 3001 (9–10), the human remains described above represent the physical remains of seven individuals of Native American ancestry. Officials of the Longyear Museum of Anthropology also have determined that, pursuant to 25 U.S.C. 3001 (3)(A), the eight objects described above are reasonably believed to have been placed with or near individual human remains at the time of death or later as part of the death rite or ceremony. Lastly, officials of the Longyear Museum of Anthropology have determined that, pursuant to 25 U.S.C. 3001 (2), there is a relationship of shared group identity that can be reasonably traced between the Native American human remains and associated funerary objects and the Oneida Indian Nation of New York.

The human remains and associated funerary objects were repatriated to NAGPRA representatives of the Oneida Nation of New York on June 26, 1995, and January 9, 2002. Representatives of any other Indian tribe that wishes to comment on this repatriation should contact Dr. Jordan Kerber, Curator of Collections, Longyear Museum of Anthropology, Department of Sociology and Anthropology, Colgate University, Hamilton, NY 13346, telephone (315) 228–7559.

The Longyear Museum of Anthropology is responsible for notifying the Oneida Nation of New York and the Oneida Tribe of Indians of Wisconsin that this notice has been published.

Dated: October 1, 2003.

**John Robbins,**

*Assistant Director, Cultural Resources.*

[FR Doc. 03–29772 Filed 11–28–03; 8:45 am]

BILLING CODE 4310–50–S

## DEPARTMENT OF THE INTERIOR

### National Park Service

### Notice of Inventory Completion: Minnesota Indian Affairs Council, Bemidji, MN, and U.S. Department of Agriculture, Forest Service, Chippewa National Forest, Cass Lake, MN

**AGENCY:** National Park Service.

**ACTION:** Notice.

Notice is here given in accordance with the Native American Graves Protection and Repatriation Act (NAGPRA), 25 U.S.C. 3003, of the completion of an inventory of human remains in the possession of the Minnesota Indian Affairs Council, Bemidji, MN, and in the control of the U.S. Department of Agriculture, Forest Service, Chippewa National Forest, Cass Lake, MN.

This notice is published as part of the National Park Service's administrative responsibilities under NAGPRA, 25 U.S.C. 3003 (d)(3). The determinations within this notice are the sole responsibility of the museum, institution, or Federal agency that has control of the Native American human remains. The National Park Service is not responsible for the determinations within this notice.

A detailed assessment of the human remains was made by Minnesota Indian Affairs Council professional staff in consultation with representatives of the Leech Lake Band of the Minnesota Chippewa Tribe, Minnesota.

In 1988, human remains representing one individual were sent anonymously to the University of Minnesota. A note in the box indicated that the human remains were collected from the area of ''Winnie Dam.'' The Winnibigoshish Lake Dam, also known as Winnie Dam, is located in the Chippewa National Forest in Itasca County, MN. No known

individual was identified. No associated funerary objects are present.

The human remains from Winnibigoshish Dam are believed to have been sent to the University of Minnesota by Mr. B. Marshall, a private collector. In 1986, Mr. Marshall donated to the Minnesota Indian Affairs Council the remains of four individuals that he had recovered in an area adjacent to Winnibigoshish Dam between 1965 and 1968. At the time of the donation, Mr. Marshall said that he believed that the remains of the four individuals dated to the historic period based on the artifacts found with them. The remains of the four individuals were reburied in 1987. The human remains sent to the University of Minnesota in 1988 are also believed to date to the historic period.

Archeological and historical evidence indicates that during the historic period the area around Winnibigoshish Dam was occupied by ancestors of the present-day Leech Lake Band of the Minnesota Chippewa Tribe, Minnesota.

Officials of the Minnesota Indians Affairs Council and Chippewa National Forest have determined that, pursuant to 25 U.S.C. 3001 (9–10), the human remains described above represent the physical remains of one individual of Native American ancestry. Officials of the Minnesota Indian Affairs Council and Chippewa National Forest also have determined that, pursuant to 25 U.S.C. 3001 (2), there is a relationship of shared group identity that can be reasonably traced between the Native American human remains and the Leech Lake Band of the Minnesota Chippewa Tribe, Minnesota.

Representatives of any other Indian tribe that believes itself to be culturally affiliated with the human remains should contact Joseph Day, Minnesota Indian Affairs Council, 3801 Bemidji Avenue, Bemidji, MN 56601, telephone (218) 755–3825, before December 31, 2003. Repatriation of the human remains to the Leech Lake Band of the Minnesota Chippewa Tribe, Minnesota may proceed after that date if no additional claimants come forward.

The Minnesota Indian Affairs Council is responsible for notifying the Leech Lake Band of the Minnesota Chippewa Tribe, Minnesota that this notice has been published.

Dated: September 23, 2003.

**John Robbins,**

*Assistant Director, Cultural Resources.*

[FR Doc. 03–29771 Filed 11–28–03; 8:45 am]

**BILLING CODE 4310–50–S**

## DEPARTMENT OF THE INTERIOR

## National Park Service

### Notice of Inventory Completion: U.S. Department of Defense, Department of the Navy, Coastal Systems Station, Dahlgren Division, Naval Surface Warfare Center, Panama City, FL

**AGENCY:** National Park Service, Interior.

**ACTION:** Notice.

Notice is here given in accordance with the Native American Graves Protection and Repatriation Act (NAGPRA), 25 U.S.C. 3003, of the completion of an inventory of human remains and associated funerary objects in the control of the U.S. Department of Defense, Department of the Navy, Coastal Systems Station, Dahlgren Division, Naval Surface Warfare Center, Panama City, FL (CSS Panama City). The human remains and cultural items were removed from the Sowell Mound site (8BY3), Panama City, Bay County, FL.

This notice is published as part of the National Park Service's administrative responsibilities under NAGPRA, 25 U.S.C. 3003 (d)(3). The determinations within this notice are the sole responsibility of the museum, institution, or Federal agency that has control of the Native American human remains and associated funerary objects. The National Park Service is not responsible for the determinations within this notice.

A detailed assessment of the human remains was made by the professional staff of Brockington and Associates, Inc., under contract to CSS Panama City in consultation with representatives of the Absentee-Shawnee Tribe of Indians of Oklahoma; Alabama-Coushatta Tribes of Texas; Alabama-Quassarte Tribal Town, Oklahoma; Chickasaw Nation, Oklahoma; Choctaw Nation of Oklahoma; Eastern Shawnee Tribe of Oklahoma; Jena Band of Choctaw Indians, Louisiana; Kialegee Tribal Town, Oklahoma; Miccosukee Tribe of Indians of Florida; Mississippi Band of Choctaw Indians, Mississippi; Muscogee (Creek) Nation, Oklahoma; Poarch Band of Creek Indians of Alabama; Seminole Nation of Oklahoma; Seminole Tribe of Florida, Dania, Big Cypress, Brighton, Hollywood &Tampa Reservations; Shawnee Tribe, Oklahoma; Thlopthlocco Tribal Town, Oklahoma; and United Keetoowah Band of Cherokee Indians in Oklahoma.

During the 1950s and in 1969 and 1970, human remains representing a minimum of 171 individuals were removed from the Sowell Mound site in Bay County, FL. The Department of the Navy acquired the 373–acre tract on which the Sowell Mound site is located in 1942 for use as a Naval Section Base. CSS Panama City gave permission to Lamar Gammon and a group of amateur archeologists to conduct excavations at the Sowell Mound site throughout the 1950s, during which time an undetermined number of human remains were removed from a 10–foot square excavation. According to an agreement between CSS Panama City and Florida State University, the university curated the human remains and artifacts removed by Mr. Gammon. In 1969 and 1970, CSS Panama City gave permission to Florida State University to conduct field school excavations at the Sowell Mound site. Due to poor record keeping, no accurate counts are available of the number of human remains or artifacts recovered during the university's excavations. According to an agreement between CSS Panama City and Florida State University, the university curated the human remains and artifacts removed by the university. At the request of CSS Panama City, in 2000 Florida State University turned over the human skeletal remains and artifacts from Mr. Gammon's and the university's excavations to Brockington and Associates, Inc., for curatorial preparation and NAGPRA documentation. No known individuals were identified. The 3,098 associated funerary objects are 3,057 ceramic fragments, 3 ground stone tools, 36 shell beads, and 2 lithics.

Based on mortuary treatment of the human remains, the style and date of the associated funerary objects, and radiocarbon dates from the Sowell Mound site, the human remains were determined to be Native American. The human remains and funerary objects from the Sowell Mound site might share a cultural relationship with any Muscogee-speaking people, because Muscogee-speaking people occupied the area during the time period to which the site is dated, approximately A.D. 100–1300. Modern descendants of Muscogee-speaking people are the Absentee-Shawnee Tribe of Indians of Oklahoma; Alabama-Coushatta Tribes of Texas; Alabama-Quassarte Tribal Town, Oklahoma; Chickasaw Nation, Oklahoma; Choctaw Nation of Oklahoma; Eastern Shawnee Tribe of Oklahoma; Jena Band of Choctaw Indians, Louisiana; Kialegee Tribal Town, Oklahoma; Miccosukee Tribe of Indians of Florida; Mississippi Band of Choctaw Indians, Mississippi; Muscogee (Creek) Nation, Oklahoma; Poarch Band

of Creek Indians of Alabama; Seminole Nation of Oklahoma; Seminole Tribe of Florida, Dania, Big Cypress, Brighton, Hollywood & Tampa Reservations; Shawnee Tribe, Oklahoma; and Thlopthlocco Tribal Town, Oklahoma. The archival and archeological evidence, however, indicate that the human remains and associated funerary objects are culturally affiliated with the Mississippi Band of Choctaw Indians, Mississippi. Determination of cultural affiliation was based on a variety of types of evidence including linguistics, historic maps, continuity of pottery traditions, and tribal oral tradition. CSS Panama City and Brockington and Associates, Inc., consulted with the Indian tribes listed above regarding repatriation of the human remains and associated funerary objects from the Sowell Mound site. All of the Indian tribes have agreed that the Mississippi Band of Choctaw Indians, Mississippi are the culturally affiliated Indian tribe and the Indian tribe that will serve as the representative Indian tribe for repatriation.

Officials of CSS Panama City have determined that, pursuant to 25 U.S.C. 3001 (9–10), the human remains described above represent the physical remains of 171 individuals of Native American ancestry. Officials of CSS Panama City also have determined that, pursuant to 25 U.S.C. 3001 (3)(A), the 3,098 objects described above are reasonably believed to have been placed with or near individual human remains at the time of death or later as part of the death rite ceremony. Lastly, officials of CSS Panama City have determined that, pursuant to 25 U.S.C. 3001 (2), there is a relationship of shared group identity that can be reasonably traced between the Native American human remains and associated funerary objects and the Mississippi Band of Choctaw Indians, Mississippi.

Representatives of any other Indian tribe that believes itself to be culturally affiliated with the human remains and associated funerary objects should contact Jim Sartain, Cultural and Natural Resources Manager, Naval Surface Warfare Center, Dahlgren Division, Coastal Systems Station Code WPE, 6703 West Highway 98, Panama City, FL 32407–7001, telephone (850) 235–5739, before December 31, 2003. Repatriation of the human remains and associated funerary objects to the Mississippi Band of Choctaw Indians, Mississippi may proceed after that date if no additional claimants come forward.

CSS Panama City is responsible for notifying the Absentee-Shawnee Tribe of Indians of Oklahoma; Alabama-Coushatta Tribes of Texas; Alabama-Quassarte Tribal Town, Oklahoma; Chickasaw Nation, Oklahoma; Choctaw Nation of Oklahoma; Eastern Shawnee Tribe of Oklahoma; Jena Band of Choctaw Indians, Louisiana; Kialegee Tribal Town, Oklahoma; Miccosukee Tribe of Indians of Florida; Mississippi Band of Choctaw Indians, Mississippi; Muscogee (Creek) Nation, Oklahoma; Poarch Band of Creek Indians of Alabama; Seminole Nation of Oklahoma; Seminole Tribe of Florida, Dania, Big Cypress, Brighton, Hollywood & Tampa Reservations; Shawnee Tribe, Oklahoma; Thlopthlocco Tribal Town, Oklahoma; and United Keetoowah Band of Cherokee Indians in Oklahoma that this notice has been published.

Dated: September 29, 2003.

**John Robbins,**

*Assistant Director, Cultural Resources.*

[FR Doc. 03–29777 Filed 11–28–03; 8:45 am]

BILLING CODE 4310–50–S

---

## DEPARTMENT OF THE INTERIOR

### National Park Service

### Notice of Inventory Completion: University of Nebraska State Museum, University of Nebraska-Lincoln, Lincoln, NE

**AGENCY:** National Park Service, Interior.

**ACTION:** Notice.

Notice is here given in accordance with the Native American Graves Protection and Repatriation Act (NAGPRA), 25 U.S.C. 3003, of the completion of an inventory of human remains in the possession of the University of Nebraska State Museum, University of Nebraska-Lincoln, Lincoln NE. The human remains were removed from Sand Creek, Kiowa County, CO.

This notice is published as part of the National Park Service's administrative responsibilities under NAGPRA, 25 U.S.C. 3003 (d)(3). The determinations within this notice are the sole responsibility of the museum, institution, or Federal agency that has control of the Native American human remains. The National Park Service is not responsible for the determinations within this notice.

A detailed assessment of the human remains was made by University of Nebraska State Museum professional staff in consultation with representatives of the Cheyenne-Arapaho Tribes of Oklahoma, Northern Cheyenne Tribe of the Northern Cheyenne Reservation, and Arapaho Tribe of the Wind River Reservation.

At an unknown date, human remains representing a minimum of one individual were removed from the area of Sand Creek, Kiowa County, CO. In 1927, a fragment of a human cranium was donated to the University of Nebraska State Museum by Mrs. J.B. Wright of Lincoln, NE. A label on the cranium fragment states ''part of Indian's skull killed in fight with Col. Shivington [sic] at Sand Creek Col in 1868.'' No known individual was identified. No associated funerary objects are present.

Consultation with representatives of the Cheyenne-Arapaho Tribes of Oklahoma, Northern Cheyenne Tribe of the Northern Cheyenne Reservation, and Arapaho Tribe of the Wind River Reservation indicates that persons affiliated with these tribes were slain at Sand Creek, CO, on November 29, 1864, when Col. John Chivington led a regiment of the Colorado Volunteers in an attack on the Sand Creek Indian Reservation. Based on geographic and historical information provided by tribal representatives during consultation and the information on the label associated with the remains, officials of the University of Nebraska State Museum have determined that the human remains are those of a Native American killed in the Sand Creek Massacre at Sand Creek, CO, in 1864.

Officials of the University of Nebraska State Museum have determined that, pursuant to 25 U.S.C. 3001 (9–10), the human remains described above represent the physical remains of one individual of Native American ancestry. Officials of the University of Nebraska State Museum also have determined that, pursuant to 25 U.S.C. 3001 (2), there is a relationship of shared group identity that can be reasonably traced between the Native American human remains and the Cheyenne-Arapaho Tribes of Oklahoma, Northern Cheyenne Tribe of the Northern Cheyenne Reservation, and Arapaho Tribe of the Wind River Reservation.

Representatives of any other Indian tribe that believes itself to be culturally affiliated with these human remains should contact Priscilla Grew, NAGPRA Coordinator, University of Nebraska-Lincoln, 301 Bessey Hall, Lincoln, NE 68588–0381, telephone (402) 472–7854, before December 31, 2003. Repatriation of the human remains to the Cheyenne-Arapaho Tribes of Oklahoma, Northern Cheyenne Tribe of the Northern Cheyenne Reservation, and Arapaho Tribe of the Wind River Reservation may proceed after that date if no additional claimants come forward.

The University of Nebraska-Lincoln is responsible for notifying the Cheyenne-

Arapaho Tribes of Oklahoma, Northern Cheyenne Tribe of the Northern Cheyenne Reservation, and Arapaho Tribe of the Wind River Reservation that this notice has been published.

Dated: September 17, 2003.

**John Robbins,**

*Assistant Director, Cultural Resources.*

[FR Doc. 03–29778 Filed 11–28–03; 8:45 am]

**BILLING CODE 4310–50–S**

## DEPARTMENT OF THE INTERIOR

### National Park Service

### Notice of Completion of Inventory of Native American Human Remains and Associated Funerary Objects from Washington County, Rhode Island, in the Possession of the Peabody Museum of Archaeology and Ethnology; Correction

**AGENCY:** National Park Service, Interior.

**ACTION:** Notice; correction.

Notice is here given in accordance with the Native American Graves Protection and Repatriation Act (NAGPRA), 25 U.S.C. 3003, of the completion of an inventory of human remains and associated funerary objects in the possession of the Peabody Museum of Archaeology and Ethnology, Harvard University, Cambridge, MA.

This notice is published as part of the National Park Service's administrative responsibilities under NAGPRA, 25 U.S.C. 3003 (d)(3). The determinations within this notice are the sole responsibility of the museum, institution, or Federal agency that has control of the Native American human remains and associated funerary objects. The National Park Service is not responsible for the determinations within this notice.

This notice corrects the number of associated funerary objects reported in a notice of inventory completion published in the **Federal Register** on May 7, 1993 (FR Doc. 93–10848, page 27309). A review of museum records resulted in the identification of three additional associated funerary objects from Ninigret Burial Hill, also called the Indian Burial Hill, in Charlestown, RI.

Paragraph 4 of the May 7, 1993, notice is corrected by substituting the following paragraph:

From the first grave came an adult female human cranium (PM 23–6–10/90374/471), a silver chain in two pieces, two fragments of brass soles and one leather sole, fragments of kettle bales, the remnant of a knife, two circle pins, one oval-shaped metal ring, a fragment of glass, a hollow glass stem containing liquid, a silver or pewter vessel with handles and a link chain, a corroded brass container (PM 23–6–10/94193–94200), and three silver brooches. From the second grave came an adult male human femur (PM 23–6–10/60375). There are no associated funerary objects with the femur.

Paragraph 7 of the May 7, 1993, notice is corrected by substituting the following three paragraphs:

Officials of the Peabody Museum of Archaeology and Ethnology have determined that pursuant to 25 U.S.C. 3001 (9–10), the human remains described above represent the physical remains of two individuals of Native American ancestry. Officials of the Peabody Museum of Archaeology and Ethnology also have determined that pursuant to 25 U.S.C. 3001 (3)(A), the 24 objects described above are reasonably believed to have been placed with or near individual human remains at the time of death or later as part of the death rite or ceremony. Lastly, officials of the Peabody Museum of Archaeology and Ethnology have determined that, pursuant to 25 U.S.C. 3001 (2), there is a relationship of shared group identity that can be reasonably traced between the human remains and associated funerary objects and the Narragansett Indian Tribe of Rhode Island.

Representatives of any other Indian tribe that believes itself to be culturally affiliated with the human remains and associated funerary objects should contact Patricia Capone, Repatriation Coordinator, Peabody Museum of Archaeology and Ethnology, Harvard University, 11 Divinity Avenue, Cambridge, MA 02138, telephone (617) 496–3702, before December 31, 2003. Repatriation of the human remains and associated funerary objects to the Narragansett Indian Tribe of Rhode Island may begin after that date if no additional claimants come forward.

The Peabody Museum of Archaeology and Ethnology is responsible for notifying the Narragansett Indian Tribe of Rhode Island that this notice has been published.

Dated: October 27, 2003.

**John Robbins,**

*Assistant Director, Cultural Resources.*

[FR Doc. 03–29767 Filed 11–28–03; 8:45 am]

**BILLING CODE 4310–50–S**

## DEPARTMENT OF THE INTERIOR

### National Park Service

### Notice of Intent to Repatriate Cultural Items: Peabody Museum of Archaeology and Ethnology, Harvard University, Cambridge, MA

**AGENCY:** National Park Service, Interior.

**ACTION:** Notice.

Notice is here given in accordance with the Native American Graves Protection and Repatriation Act (NAGPRA), 43 CFR 10.8 (f), of the intent to repatriate cultural items in the possession of the Peabody Museum of Archaeology and Ethnology, Harvard University, Cambridge, MA, that meet the definition of unassociated funerary objects under 25 U.S.C. 3001.

This notice is published as part of the National Park Service's administrative responsibilities under NAGPRA, 25 U.S.C. 3003 (d)(3). The determinations within this notice are the sole responsibility of the museum, institution, or Federal agency that has control of the cultural items. The National Park Service is not responsible for the determinations within this notice.

The three cultural items are two brass tubes and one string of shell beads.

The two brass tubes were collected by J.V.C. Smith in 1831 from Fall River, Bristol County, MA, and were donated to the Peabody Museum of Archaeology and Ethnology by F. Kneeland in 1886. Museum documentation indicates that the brass tubes were recovered from a grave. The Peabody Museum of Archaeology and Ethnology is not in possession of the human remains from this burial.

The interment most likely dates to the Historic/Contact period (post-A.D. 1500). According to the Peabody Museum Annual Report of 1887, the human remains from this grave site were wrapped in several layers of braided or woven bark-cloth with an outer layer of cedar bark. Woven mats and bark were commonly used in Wampanoag burials during the Late Woodland period and later (post-A.D. 1000). Sheet brass and brass objects were European trade items, and therefore indicate a postcontact temporal context.

At an unknown date, a string of shell beads was recovered from a grave site in Bridgewater, Plymouth County, MA. The string of shell beads was donated to the Peabody Museum of Archaeology and Ethnology in 1899 by H.W. Hatch. The Peabody Museum of Archaeology and Ethnology is not in possession of the human remains from this burial.

The interment most likely dates to the Historic/Contact period (post-A.D. 1500). According to museum documentation, the shell beads were found with ''porcelain beads,'' which are not in the possession of the Peabody Museum of Archaeology and Ethnology. True porcelain beads do not appear in historic contexts until the 19th century, although beads made from money cowry shell (C. moneta) were called ''porcelain,'' and were imported and traded by Europeans before this time. Even if these beads are of white glass rather than shell, glass beads were introduced by Europeans as trade items in the 17th century, and would also support a postcontact date.

Oral tradition and historical documentation indicate that Fall River and Bridgewater, MA, are within the aboriginal and historic homeland of the Wampanoag Nation. The present-day Indian tribe and groups that are most closely affiliated with the Wampanoag Nation are the Wampanoag Tribe of Gay Head (Aquinnah) of Massachusetts, Mashpee Wampanoag Indian Tribe (a nonfederally recognized Indian group), and Assonet Band of the Wampanoag Nation Tribe (a nonfederally recognized Indian group).

Officials of the Peabody Museum of Archaeology and Ethnology have determined that, pursuant to 25 U.S.C. 3001 (3)(B), the cultural items are reasonably believed to have been placed with or near individual human remains at the time of death or later as part of the death rite or ceremony and are believed, by a preponderance of the evidence, to have been removed from a specific burial site of an Native American individual. Officials of the Peabody Museum of Archaeology and Ethnology also have determined that, pursuant to 25 U.S.C. 3001 (2), there is a relationship of shared group identity that can be reasonably traced between the unassociated funerary objects and the Wampanoag Tribe of Gay Head (Aquinnah) of Massachusetts, and that there is a cultural relationship between the unassociated funerary objects and Mashpee Wampanoag Indian Tribe (a nonfederally recognized Indian group) and Assonet Band of the Wampanoag Nation (a nonfederally recognized Indian group).

Representatives of any other Indian tribe that believes itself to be culturally affiliated with the unassociated funerary objects should contact Patricia Capone, Repatriation Coordinator, Peabody Museum of Archaeology and Ethnology, Harvard University, 11 Divinity Avenue, Cambridge, MA 02138, telephone (617) 496–3702, before December 31, 2003. Repatriation of the unassociated funerary objects to the Wampanoag Repatriation Confederation on behalf of the Wampanoag Tribe of Gay Head (Aquinnah) of Massachusetts, Mashpee Wampanoag Indian Tribe (a nonfederally recognized Indian group), and Assonet Band of the Wampanoag Nation (a nonfederally recognized Indian group) may proceed after that date if no additional claimants come forward.

The Peabody Museum of Archaeology and Ethnology is responsible for notifying the Wampanoag Repatriation Confederation, Wampanoag Tribe of Gay Head (Aquinnah) of Massachusetts, Mashpee Wampanoag Indian Tribe (a nonfederally recognized Indian group), and Assonet Band of the Wampanoag Nation (a nonfederally recognized Indian group) that this notice has been published.

Dated: October 27, 2003.

**John Robbins,**

*Assistant Director, Cultural Resources.*

[FR Doc. 03–29769 Filed 11–28–03; 8:45 am]

BILLING CODE 4310–50–S

---

## DEPARTMENT OF THE INTERIOR

### National Park Service

### Notice of Inventory Completion: Peabody Museum of Archaeology and Ethnology, Harvard University, Cambridge, MA

**AGENCY:** National Park Service, Interior.

**ACTION:** Notice.

Notice is here given in accordance with the Native American Graves Protection and Repatriation Act (NAGPRA), 25 U.S.C. 3003, of the completion of an inventory of human remains in the possession of the Peabody Museum of Archaeology and Ethnology, Harvard University, Cambridge, MA. The human remains were removed from Apache County, AZ.

This notice is published as part of the National Park Service's administrative responsibilities under NAGPRA, 25 U.S.C. 3003 (d)(3). The determinations within this notice are the sole responsibility of the museum, institution, or Federal agency that has control of the Native American human remains. The National Park Service is not responsible for the determinations within this notice.

A detailed assessment of the human remains was made by the Peabody Museum of Archaeology and Ethnology professional staff in consultation with representatives of the Hopi Tribe of Arizona; Navajo Nation, Arizona, New Mexico & Utah; Pueblo of Acoma, New Mexico; and Pueblo of Laguna, New Mexico.

In 1884, human remains representing one individual were removed from Fort Defiance, Apache County, AZ, by Dr. Sampson. The human remains were donated to the Peabody Museum of Archaeology and Ethnology the same year. Museum documentation describes the human remains as ''Navajo?''. No known individual was identified. No funerary objects are present.

In 1903, human remains representing a minimum of three individuals were removed from Massacre Cave, Canyon del Muerto, Apache County, AZ, by Stewart Cullin on behalf of the Brooklyn Museum, Brooklyn, NY. In 1938, the human remains were permanently loaned to the Peabody Museum of Archaeology and Ethnology. Museum documentation describes the human remains as probably Navajo. Massacre Cave is the site of the 1805 massacre of Navajo people by Spanish colonial military forces. Two of the human remains exhibit gun shot wounds, which indicate a postcontact date consistent with the 1805 massacre. No known individuals were identified. No funerary objects are present.

Cranial morphology indicates that the human remains from Fort Defiance and Canyon del Muerto, AZ, are four individuals of Navajo ancestry.

Although the lands from which the human remains were removed are currently under the jurisdiction of the U.S. Department of the Interior, Bureau of Indian Affairs, the Peabody Museum of Archaeology and Ethnology has possession and control of the human remains because their removal from tribal land predates the permit requirements established by the Antiquities Act of 1906.

Officials of the Peabody Museum of Archaeology and Ethnology have determined that, pursuant to 25 U.S.C. 3001 (9–10), the human remains described above represent the physical remains of four individuals of Native American ancestry. Officials of the Peabody Museum of Archaeology and Ethnology also have determined that, pursuant to 25 U.S.C. 3001 (2), there is a relationship of shared group identity that can be reasonably traced between the Native American human remains and the Navajo Nation, Arizona, New Mexico & Utah.

Representatives of any other Indian tribe that believes itself to be culturally affiliated with the human remains should contact Patricia Capone, Repatriation Coordinator, Peabody Museum of Archaeology and Ethnology, Harvard University, 11 Divinity Avenue, Cambridge, MA 02138, telephone (617)

496–3702, before December 31, 2003. Repatriation of the human remains to the Navajo Nation, Arizona, New Mexico & Utah may proceed after that date if no additional claimants come forward.

The Peabody Museum of Archaeology and Ethnology is responsible for notifying the Hopi Tribe of Arizona; Navajo Nation, Arizona, New Mexico & Utah; Pueblo of Acoma, New Mexico; and Pueblo of Laguna, New Mexico that this notice has been published.

Dated: September 24, 2003.

**John Robbins,**

*Assistant Director, Cultural Resources.*

[FR Doc. 03–29776 Filed 11–28–03; 8:45 am]

**BILLING CODE 4310–50–S**

## INTERNATIONAL TRADE COMMISSION

**[Inv. No. 337–TA–497]**

## In the Matter of Certain Universal Transmitters for Garage Door Openers; Notice of Commission Determination To Affirm Initial Determination Denying Temporary Relief

**AGENCY:** U.S. International Trade Commission.

**ACTION:** Notice.

**SUMMARY:** Notice is hereby given that the U.S. International Trade Commission has determined to affirm the presiding administrative law judge's initial determination finding subject matter jurisdiction and denying temporary relief in the above-captioned investigation.

**FOR FURTHER INFORMATION CONTACT:** Wayne Herrington, Esq., Office of the General Counsel, U.S. International Trade Commission, 500 E Street, SW., Washington, DC 20436, telephone (202) 205–3090. Copies of the Commission's order, the public version of the administrative law judge's (ALJ's) initial determination (ID) on temporary relief, and all other nonconfidential documents filed in connection with this investigation are or will be available for inspection during official business hours (8:45 a.m. to 5:15 p.m.) in the Office of the Secretary, U.S. International Trade Commission, 500 E Street, SW., Washington, DC 20436, telephone 202–205–2000. General information concerning the Commission may also be obtained by accessing its Internet server (*http://www.usitc.gov*). The public record for this investigation may be viewed on the Commission's electronic docket (EDIS) at *http://edis.usitc.gov.* Hearing-impaired persons are advised that information on this matter can be obtained by contacting the Commission's TDD terminal on 202–205–1810.

**SUPPLEMENTARY INFORMATION:** The Commission instituted this investigation on August 26, 2003, based on a complaint filed by The Chamberlain Group, Inc. (''Chamberlain'') of Elmhurst, Illinois. 68 FR 51301 (August 26, 2003). The complaint, as supplemented, alleged violations of section 337 of the Tariff Act of 1930 in the importation into the United States, sale for importation, and sale within the United States after importation of certain universal transmitters for garage door openers by reason of infringement of claims 1–8 of U.S. Patent No. RE 35,364 and claims 5–62 of U.S. Patent No. RE 37,986, and violation of section 1201(a)(2) of the Digital Millenium Copyright Act (''DMCA''), 17 U.S.C. 1201(a)(2). The respondents named in the complaint and the Commission's notice of investigation are Skylink Technologies, Inc.; Capital Prospect, Ltd.; and Philip Tsui (collectively, ''respondents'').

At the same time that the Commission instituted the investigation, it provisionally accepted Chamberlain's motion for temporary relief which accompanied the complaint and which was based on the allegation that there was reason to believe that respondents were in violation of section 337. Chamberlain's motion for temporary relief was based solely on respondents' alleged violation of section 1201(a)(2) of the DMCA.

On September 3, 2003, respondents filed their opposition to Chamberlain's motion for temporary relief. In that opposition, respondents argued, *inter alia,* that the Commission does not have jurisdiction under section 337 to consider an allegation of violation of the DMCA. On September 8, 2003, the ALJ invited separate briefing of this jurisdictional issue.

On September 15, 2003, the respondents requested leave of the ALJ to file a motion for summary determination on the substantive question of whether respondents are in violation of section 1201(a)(2) of the DMCA, to waive the temporary relief hearing, and to suspend the temporary relief schedule. Respondents attached their proposed motion for summary determination to their request for leave. Respondents represented that if their motion for summary determination were denied by the ALJ, and if the Commission agreed with such denial, they would voluntarily enter into a consent order stipulation and proposed consent order attached as an exhibit to their request for leave. All parties supported respondents' request for leave and, on September 17, 2003, the ALJ granted that request in Order No. 6, treating the attached motion for summary determination as filed, setting a briefing schedule, and staying the temporary relief procedural schedule.

On October 2, 2003, a non-party, Consumers Union, filed a motion for leave to file a submission in support of respondents' motion for summary determination, including its proposed submission with its motion for leave. Chamberlain opposed the motion; respondents and the Commission investigative attorney did not oppose the motion. On October 15, 2003, the ALJ granted Consumers Union's motion for leave in Order No. 8 and treated its submission as filed.

On October 10, 2003, Chamberlain filed a motion to strike respondents' arguments in their reply memorandum on summary determination concerning burden of proof or, in the alternative, to consider rebuttal argument in Chamberlain's papers filed in a parallel district court action. Both respondents and the Commission investigative attorney opposed Chamberlin's motion. The ALJ found that the issue of burden of proof was raised in respondents' summary determination motion and that the arguments in Chamberlain's district court filing were largely repetitive of those in its response to that motion. Accordingly, the ALJ denied Chamberlain's motion in its entirety on October 24, 2003, in Order No. 9.

On November 4, 2004, the ALJ issued his ID on temporary relief, finding that (1) the Commission has subject matter jurisdiction over Chamberlain's DMCA claim, and (2) Chamberlain's allegation that respondents violate the DMCA has not been supported as a matter of law. He therefore concluded that there is no basis to issue temporary relief. The Commission understands the ALJ's second conclusion to be a determination that there is no reason to believe a violation of section 337 exists with respect to Chamberlain's DMCA claim because it is unlikely that Chamberlain will succeed on the merits of that claim.

Complainant Chamberlain filed comments with respect to the ID. Respondents and the Commission investigative attorney filed reply comments.

Having examined the relevant record in this investigation, including the ALJ's ID, the written comments on the ID, and the replies thereto, the Commission determined to affirm the ID.

The authority for the Commission's determination is contained in section 337 of the Tariff Act of 1930, as

amended (19 U.S.C. 1337), and in § 210.66 of the Commission's Rules of Practice and Procedure (19 CFR 210.66).

Issued: November 24, 2003.
By order of the Commission.

**Marilyn R. Abbott,**

*Secretary to the Commission.*

[FR Doc. 03–29808 Filed 11–28–03; 8:45 am]

BILLING CODE 7020–02–P

## INTERNATIONAL TRADE COMMISSION

**[USITC SE–03–039]**

### Sunshine Act Meeting

**AGENCY HOLDING THE MEETING:** International Trade Commission.

**TIME AND DATE:** December 4, 2003 at 11:30 a.m.

**PLACE:** Room 101, 500 E Street SW., Washington, DC 20436, Telephone: (202) 205–2000.

**STATUS:** Open to the public.

**MATTERS TO BE CONSIDERED:**

1. Agenda for future meetings: none.
2. Minutes.
3. Ratification List.
4. Inv. No. TA–421–4 (Market Disruption)(Certain Ductile Iron Waterworks Fittings from China)—briefing and vote. (The Commission is currently scheduled to transmit its determination on market disruption to the President and the United States Trade Representative on December 4, 2003.)
5. Outstanding action jackets: none.

In accordance with Commission policy, subject matter listed above, not disposed of at the scheduled meeting, may be carried over to the agenda of the following meeting.

Issued: November 25, 2003.
By order of the Commission.

**MARILYN R. ABBOTT,**

*Secretary to the Commission.*

[FR Doc. 03–29925 Filed 11–26–03; 11:16 am]

BILLING CODE 7020–02–P

## DEPARTMENT OF JUSTICE

### Notice of Lodging Proposed Consent Decree

In accordance with Departmental Policy, 28 CFR 50.7, notice is hereby given that a proposed Consent Decree in *United States of America* v. *Northwoods Development, LLC d/b/a Portage Point Inn, Michael DeVoe,* 1:03–CV–336, was lodged with the United States District Court for the Western District of Michigan, Southern Division on November 4, 2003.

This proposed Consent Decree concerns a complaint filed by the United States against Northwoods Development, LLC, d/b/a Portage Point Inn, and Michael DeVoe, pursuant to Section 301(a) of the Clean Water Act, 33 U.S.C. 1311(a) and Section 10 of the Rivers and Harbors Act of 1899, 33 U.S.C. 403 to obtain injunctive relief and impose civil penalties against the Defendants for violating the Clean Water Act by discharging pollutants without a permit into waters of the United States. The proposed Consent Decree resolves these allegations by requiring the Defendants to restore the impacted areas and to pay a civil penalty.

The Department of Justice will accept written comments relating to this proposed Consent Decree for thirty (30) days from the date of publication of this notice. Please address comments to Thomas J. Gezon, Assistant United States Attorney, Western District of Michigan, P.O. Box 208, Grand Rapids, MI 49501–0208, (616) 456–2408, and refer to *United States* v. *Northwoods Development, LLC,* Court No. 1:03–CV–336, (Internal Case Number 2002V00286).

The proposed Consent Decree may be examined at the Clerk's Office, United States District Court for the Western District of Michigan, B35 Federal Building, 410 W. Michigan Avenue, Kalamazoo, MI 49007. In addition, the proposed consent decree may be viewed at *http://www.usdoj.gov/enrd/open.html.*

**Thomas J. Gezon,**

*Assistant United States Attorney, Western District of Michigan.*

[FR Doc. 03–29754 Filed 11–28–03; 8:45 am]

BILLING CODE 4410–15–M

## DEPARTMENT OF JUSTICE

### Antitrust Division

### Notice Pursuant to the National Cooperative Research and Production Act of 1993—Grinding Optimization Venture

Notice is hereby given that, on October 2, 2003, pursuant to section 6(a) of the National Cooperative Research and Production Act of 1993, 15 U.S.C. 4301 *et seq.* (''the Act''), Grinding Optimization Venture has filed written notifications simultaneously with the Attorney General and the Federal Trade Commission disclosing (1) The identities of the parties and (2) the nature and objectives of the venture. The notifications were filed for the purpose of invoking the Act's provisions limiting the recovery of antitrust plaintiffs to actual damages under specified circumstances. Pursuant to section 6(b) of the Act, the identities of the parties are TechSolve, Inc., Cincinnati, OH; Delphi, Energy & Chassis System, Dayton, OH; Applied Grinding Technologies, Inc., Wixcom, MI; Purdue University, West Lafayette, IN; and Landis Gardner—A UNOVA Company, Waynesboro, PA. The nature and objectives of the venture are to develop and demonstrate the application of an intelligent system that uses techniques of soft computing and artificial intelligence to learn, control, monitor, and optimize a variety of complex precision grinding processes without resorting to trial and error.

**Dorothy B. Fountain,**

*Deputy Director of Operations, Antitrust Division.*

[FR Doc. 03–29831 Filed 11–28–03; 8:45 am]

BILLING CODE 4410–11–M

## DEPARTMENT OF JUSTICE

### Antitrust Division

### Notice Pursuant to the National Cooperative Research and Production Act of 1993—IMS Global Learning Consortium, Inc.

Notice is hereby given that, on October 30, 2003, pursuant to section 6(a) of the National Cooperative Research and Production Act of 1993, 15 U.S.C. 4301 *et seq.* (''the Act''), IMS Global Learning Consortium, Inc. has filed written notifications simultaneously with the Attorney General and the Federal Trade Commission disclosing changes in its membership status. The notifications were filed for the purpose of extending the Act's provisions limiting the recover of antitrust plaintiffs to actual damages under specified circumstances. Specifically, Sentient Consulting Limited, Liverpool, United Kingdom; and University of Ulster, Newtownabbey Co., Antrim, United Kingdom have been added as parties to this venture.

No other changes have been made in either the membership or planned activity of the group research project. Membership in this group research project remains open, and IMS Global Learning Consortium, Inc. intends to file additional written notification disclosing all changes in membership.

On April 7, 2000, IMS Global Learning Consortium, Inc. filed its original notification pursuant to section 6(a) of the Act. The Department of Justice published a notice in the **Federal Register** pursuant to section 6(b) of the

Act on September 13, 2000 (65 FR 55283).

The last notification was filed with the Department on August 8, 2003. A notice was published in the **Federal Register** pursuant to section 6(b) of the Act on August 29, 2003 (68 FR 52055).

**Dorothy B. Fountain,**

*Deputy Director of Operations, Antitrust Division.*

[FR Doc. 03–29833 Filed 11–28–03; 8:45 am]

BILLING CODE 4410–11–M

## DEPARTMENT OF JUSTICE

### Antitrust Division

### Notice Pursuant to the National Cooperative Research and Production Act of 1993—Nano-Engineered Thermal Interfaces Enabling Next Generation Microelectronics

Notice is hereby given that, on October 2, 2003, pursuant to Section 6(a) of the National Cooperative Research and Production Act of 1993, 15 U.S.C. 4301 *et seq.* (''the Act''), Nano-Engineered Thermal Interfaces Enabling Next Generation Microelectronics has filed written notifications simultaneously with the Attorney General and the Federal Trade Commission disclosing (1) the identities of the parties and (2) the nature and objectives of the venture. The notifications were filed for the purpose of invoking the Act's provisions limiting the recovery of antitrust plaintiffs to actual damages under specified circumstances. Pursuant to Section 6(b) of the Act, the identities of the parties are General Electric Global Research, Niskayuna, NY; Superior MicroPowders, LLC, Albuquerque, New Mexico; and The Research Foundation of SUNY at Binghamton, Binghamton, NY. The nature and objectives of the venture are to develop and demonstrate nano-engineered thermal interfaces materials enabling next generation microelectronics.

**Dorothy B. Fountain,**

*Deputy Director of Operations, Antitrust Division.*

[FR Doc. 03–29762 Filed 11–28–03; 8:45 am]

BILLING CODE 4410–11–M

## DEPARTMENT OF JUSTICE

### Antitrust Division

### Notice Pursuant to the National Cooperative Research and Production Act of 1993 Power Tool Institute Joint Venture Project

Notice is hereby given that, on October 23, 2003, pursuant to section 6(a) of the National Cooperative Research and Production Act of 1993, 15 U.S.C. 4301 *et seq.* (''the Act''), the Power Tool Institute Joint Venture Project has filed written notifications simultaneously with the Attorney General and the Federal Trade Commission disclosing (1) the identities of the parties and (2) the nature and objectives of the venture. The notifications were filed for the purpose of invoking the Act's provisions limiting the recovery of antitrust plaintiffs to actual damages under specified circumstances. Pursuant to section 6(b) of the Act, the identities of the parties are The Black & Decker Corp., Towson, MD; Hitachi Koki, U.S.A., Ltd., Norcross, GA, a subsidiary of Hitachi Koki Company Ltd., Tokyo, Japan; Pentair Tools Group, Jackson, TN, a subsidiary of Pentair Corporation, Golden Valley, MN; Robert Bosch Tool Corporation, Mount Prospect, IL, an affiliated entity of Robert Bosch GMBH, Gerlingen, Germany and Scintilla AG, Solothum, Switzerland; and Ryobi Technologies, Inc., Anderson, SC and One World Technologies, Inc., Anderson, SC, both subsidiaries of Techtronics Inc., Tsuen Wan, Hong Kong, China. The nature and objectives of the venture are the research and development of technology for power saw blade contact injury avoidance, including skin sensing systems, blade braking systems, and/or blade guarding systems. The participants intend to share confidential information and intellectual property rights in order to achieve the goals of the joint venture. The participants intend to share intellectual property that is contributed, and any intellectual property or technology that is developed through the joint venture, among themselves and the Power Tool Institute. Any royalties generated by the licensing of any technology or intellectual property created through the joint venture will be shared among the joint venture participants and the Power Tool Institute pursuant to the terms of the joint venture agreement and the accompanying confidentiality agreements. The technology or intellectual property created through the joint venture will be available to the public for a licensing fee, which will be non-discriminatory and determined in accordance with the costs to develop the intellectual property to be licensed.

**Dorothy B. Fountain,**

*Deputy Director of Operations, Antitrust Division.*

[FR Doc. 03–29834 Filed 11–28–03; 8:45 am]

BILLING CODE 4410–11–M

## DEPARTMENT OF JUSTICE

### Antitrust Division

### Notice Pursuant to the National Cooperative Research and Production Act of 1993—Roll to Roll Processing To Enable the Organic Electronic Revolution

Notice is hereby given that, on October 16, 2003, pursuant to section 6(a) of the National Cooperative Research and Production Act of 1993, 15 U.S.C. 4301 *et seg.* (''the Act''), Roll to Roll Processing to Enable the Organic Electronic Revolution has filed written notifications simultaneously with the Attorney General and the Federal Trade Commission disclosing (1) the identities of the parties and (2) the nature and objectives of the venture. The notifications were filed for the purpose of invoking the Act's provisions limiting the recovery of antitrust plaintiffs to actual damages under specified circumstances. Pursuant to section 6(b) of the Act, the identities of the parties are GE Global Research, Niskayuna, NY; and Energy Conversion Devices, Inc., Rochester Hills, MI. The nature and objectives of the venture are to develop and demonstrate roll to roll processing to enable the organic electronics industry by providing highly functional devices at low cost and high volume.

**Dorothy B. Fountain,**

*Deputy Director of Operations, Antitrust Division.*

[FR Doc. 03–29832 Filed 11–28–03; 8:45 am]

BILLING CODE 4410–11–M

## DEPARTMENT OF LABOR

### Mine Safety and Health Administration

### Evaluation of International Electrotechnical Commission's (IEC) Standards for Intrinsic Safety and Explosion-Proof Enclosures

**AGENCY:** Mine Safety and Health Administration (MSHA), Labor.

**ACTION:** Notice of intent to review international (IEC) standards for

equivalency to MSHA's product approval requirements.

**SUMMARY:** This notice announces the Mine Safety and Health Administration's intent to review the International Electrotechnical Commission's (IEC) standards for Electrical Apparatus for Explosive Gas Atmospheres, Part 0, General Requirements; Part 1, Construction and Verification Test of Flameproof enclosures of Electrical Apparatus; and Part 11, Intrinsic Safety.

MSHA will review these standards to determine if they are equivalent to the applicable MSHA product approval requirements or can be modified to provide at least the same degree of protection as those requirements.

**DATES:** Written comments must be submitted by January 30, 2004.

**ADDRESSES:** Comments must be clearly identified as such and transmitted either electronically to *equivalencycomments@dol.gov,* by facsimile to (304) 547–2044, or by regular mail or hand delivery to MSHA, Approval and Certification Center, Box 251, Industrial Park Road, Triadelphia, West Virginia 26059. You may contact MSHA with any format questions. Comments are posted for public viewing at *http://www.msha.gov/currentcomments.htm.*

**FOR FURTHER INFORMATION CONTACT:** David C. Chirdon, Chief, Electrical Safety Division, Approval and Certification Center, MSHA; phone: (304) 547–2026; facsimile: (304) 547–2044; E-mail: *chirdon.david@dol.gov.*

**SUPPLEMENTARY INFORMATION:**

## Background

On June 17, 2003, MSHA published a final rule, 30 CFR part 6—Testing and Evaluation by Independent Laboratories and Non-MSHA Product Safety Standards. The rule established alternate requirements for testing and evaluation of products that MSHA approves for use in gassy underground mines. This final rule permits manufacturers to have their products approved based on non-MSHA product safety standards. This will occur only after MSHA has determined that such standards are equivalent to its applicable product approval requirements or can be modified to provide at least the same degree of protection as those MSHA requirements.

Section 6.20(b) of this regulation stated that ''MSHA will publish its intent to review any non-MSHA product safety standard for equivalency in the **Federal Register** for the purpose of soliciting public input.'' Section 6.20(c) further explained that ''A listing of all equivalency determinations will be published in this part 6 and the applicable approval parts. The listing will state whether MSHA accepts the non-MSHA product safety standards in their original form, or whether MSHA will require modifications to demonstrate equivalency. If modifications are required, they will be provided in the listing. MSHA will notify the public of each equivalency determination and will publish a summary of the basis for its determination.''

MSHA solicits public input on its review of the International Electrotechnical Commission's (IEC) standards for Electrical Apparatus for Explosive Gas Atmospheres, Part 0, General Requirements (IEC 60079–0); Part 1, Construction and Verification Test of Flameproof enclosures of Electrical Apparatus (IEC 60079–1); and Part 11, Intrinsic Safety (IEC 60079–11). The IEC is a worldwide organization for standardization comprising all national electrotechnical committees. The object of the IEC is to promote international cooperation on all questions concerning standardization in the electrical and electronic fields. To this end and in addition to other activities, the IEC publishes international standards. The standards referenced in this notice are subparts of the IEC standards for hazardous location equipment.

MSHA welcomes comments on this review and any comments relative to other product safety standards that could be considered for future consideration.

After the comment period closes, an evaluation will be performed. At the conclusion of that evaluation, the determination will be published in the **Federal Register.** This determination will be accompanied by a list of modifications, if they are deemed necessary.

Dated: November 20, 2003.

**Dave D. Lauriski,**

*Assistant Secretary of Labor for Mine Safety and Health.*

[FR Doc. 03–29747 Filed 11–28–03; 8:45 am]

BILLING CODE 4510–43–P

## DEPARTMENT OF LABOR

## Mine Safety and Health Administration

## Petitions for Modification

The following parties have filed petitions to modify the application of existing safety standards under section 101(c) of the Federal Mine Safety and Health Act of 1977.

### 1. Genwal Resources, Inc.

[Docket No. M–2003–082–C]

Genwal Resources, Inc., P.O. Box 1077, Price, Utah 84501 has filed a petition to modify the application of 30 CFR 75.350 (Air courses and belt haulage entries) to its South Crandall Canyon Mine (MSHA I.D. No. 42–02356) located in Emery County, Utah. The petitioner requests a modification of the existing standard to allow the use of two-entry longwall development. The petitioner proposes to use the belt entry as a return air course during two-entry longwall development, and as an intake air course during longwall extraction to insure an adequate quantity of ventilation to dilute and render harmless any methane or other noxious gases that otherwise may accumulate. The petitioner asserts that the proposed alternative method would provide at least the same measure of protection as the existing standard and will not result in a diminution of safety to the affected miners.

### 2. Genwal Resources, Inc.

[Docket No. M–2003–083–C]

Genwal Resources, Inc., P.O. Box 1077, Price, Utah 84501 has filed a petition to modify the application of 30 CFR 75.500 (Permissible electric equipment) to its South Crandall Canyon Mine (MSHA I.D. No. 42–02356) located in Emery County, Utah. The petitioner requests a modification of the existing standard to allow for the use of specific electronic equipment for testing and diagnostics on permissible equipment, for which permissible testing and diagnostic equipment is not readily available or approved. This will allow use of testing and diagnostic equipment in those locations within the mine where permissible electric equipment is required. The petitioner proposes to use the following non-permissible low-voltage or battery powered electronic testing and diagnostic equipment: lap top computers, oscilloscopes, vibration analysis machines, cable fault detectors, point temperature probes, infrared temperature devices and recorders, pressure and flow measurement devices, signal analyzer devices, ultrasonic thickness gauges, electronic component testers, electronic tachometers and battery operated drills. The petitioner states that other testing and diagnostic equipment may be used if approved in advance by MSHA's District Office. The petitioner asserts that the proposed alternative method would provide at least the same measure of protection as the existing standard.

**3. Genwal Resources, Inc.**

[Docket No. M–2003–084–C]

Genwal Resources, Inc., P.O. Box 1077, Price, Utah 84501 has filed a petition to modify the application of 30 CFR 75.804(a) (Underground high-voltage cables) to its South Crandall Canyon Mine (MSHA I.D. No. 42–02356) located in Emery County, Utah. The petitioner requests a modification of the existing standard to allow the use of high-voltage cables for longwall equipment, with an insulated internal ground check conductor smaller than a No. 10 (AWG), and the ground check conductor not smaller than a No. 16 (AWG). The type of high-voltage cables for longwall equipment will be Cablec Anaconda grand 5KV 3/C type SHD+GC, Pirelli 5KV 3/C type SHD–CENTER–GC or Tiger Grand 5KV type SHC–CGC, MSHA accepted as flame-resistant cable. The ground check conductor will not be smaller than a No. 16 (AWG) stranded conductor. The petitioner asserts that the proposed alternative method would provide at least the same measure of protection as the existing standard.

**4. Genwal Resources, Inc.**

[Docket No. M–2003–085–C]

Genwal Resources, Inc., P.O. Box 1077, Price, Utah 84501 has filed a petition to modify the application of 30 CFR 75.1002–1(a) (Location of other electric equipment; requirements for permissibility) now 30 CFR 75.1002 (Installation of electric equipment and conductors; permissibility) to its South Crandall Canyon Mine (MSHA I.D. No. 42–02356) located in Emery County, Utah. The petitioner requests a modification of the existing standard to allow for the use of specific electronic equipment for testing and diagnostics on permissible equipment, for which permissible testing and diagnostic equipment is not readily available or approved, in those locations within the mine where permissible electric equipment is required. The petitioner proposes to use the following non-permissible low-voltage or battery powered electronic testing and diagnostic equipment: lap top computers, oscilloscopes, vibration analysis machines, cable fault detectors, point temperature probes, infrared temperature devices and recorders, pressure and flow measurement devices, signal analyzer devices, ultrasonic thickness gauges, electronic component testers, electronic tachometers and battery operated drills. The petitioner states that other testing and diagnostic equipment may be used if approved in advance by MSHA's District Office. The petitioner asserts that the proposed alternative method would provide at least the same measure of protection as the existing standard.

**5. Genwal Resources, Inc.**

[Docket No. M–2003–086–C]

Genwal Resources, Inc., P.O. Box 1077, Price, Utah 84501 has filed a petition to modify the application of 30 CFR 75.1101–8 (Water sprinkler systems; arrangement of sprinklers) to its South Crandall Canyon Mine (MSHA I.D. No. 42–02356) located in Emery County, Utah. The petitioner proposes to use a water sprinkler system that consists of a single overhead pipe system with automatic sprinklers located not more than 10 feet apart so that the water discharged from the sprinklers will cover 50 feet of fire-resistant belt or 150 feet of non-fire resistant belt adjacent to the belt drive. In addition, automatic sprinklers would be located not more than 10 feet apart so that the water discharged from the sprinkler(s) will cover the drive motor(s), belt take-up, electrical controls, and gear reducing unit for each belt drive. The petitioner has listed in this petition for modification, specific procedures that would be followed when using the proposed water sprinkler system. The petitioner asserts that the proposed alternative method would provide at least the same measure of protection as the existing standard.

**6. White County Coal, LLC**

[Docket No. M–2003–087–C]

White County Coal, LLC, 1525 County Road 1300 North Carmi, Illinois 62821 has filed a petition to modify the application of 30 CFR 75.1700 (Oil and gas wells) to its Pattiki II Mine (MSHA I.D. No. 11–03058) located in White County, Illinois. The petitioner proposes to plug oil and gas wells using the proven techniques described in this petition and then mine in close proximity or through such plugged wells using the specific procedures listed in the petition for modification. The petitioner asserts that the proposed alternative method would provide at least the same measure of protection as the existing standard.

**7. D & D Coal Company**

[Docket No. M–2003–088–C]

D & D Coal Company, 320 East Main Street, Hegins, Pennsylvania 17938 has filed a petition to modify the application of 30 CFR 75.311(b)(2) and (b)(3) (Main mine fan operation) to its Primrose Slope Mine (MSHA I.D. No. 36–08341) located in Schuylkill County, Pennsylvania. The petitioner requests a modification of the existing standard to permit the electrical circuits entering the underground mine to remain energized to the mine's pumps while the main fan has been intentionally shut down during idle shifts when no miners are working underground. The petitioner has listed in this petition specific terms and conditions that would be followed when implementing the proposed alternative method. The petitioner asserts that the proposed alternative method would provide at least the same measure of protection as the existing standard.

**8. Warrior Coal, LLC**

[Docket No. M–2003–089–C]

Warrior Coal, LLC, 57 J. E. Ellis Road, Madisonville, Kentucky 42431 has filed a petition to modify the application of 30 CFR 75.1700 (Oil and gas wells) to its West Ridge Mine (MSHA I.D. No. 15–17216) located in Hopkins County, Kentucky. The petitioner proposes to mine through oil and gas wells in all mineable coal beds using the specific terms and conditions listed in this petition. The petitioner asserts that the proposed alternative method would provide at least the same measure of protection as the existing standard.

**9. Kingwood Mining Company, LLC**

[Docket No. M–2003–090–C]

Kingwood Mining Company, LLC, Route 1, Box 294C, Newburg, West Virginia 26410 has filed a petition to modify the application of 30 CFR 75.503 (Permissible electric face equipment; maintenance) to its Whitetail K—Mine (MSHA I.D. No. 46–08751) located in Preston County, West Virginia. The petitioner proposes to use #4 A.W.G. and #2 A.W.G. portable trailing cables up to a maximum length of 750 feet to supply 575-volt, three phase, alternating current to roof bolting machines and shuttle cars using the specific terms and conditions listed in this petition. The petitioner asserts that the proposed alternative method would provide at least the same measure of protection as the existing standard.

**Request for Comments**

Persons interested in these petitions are encouraged to submit comments via e-mail to *comments@msha.gov,* or on a computer disk along with an original hard copy to the Office of Standards, Regulations, and Variances, Mine Safety and Health Administration, 1100 Wilson Boulevard, Room 2350, Arlington, Virginia 22209. All comments must be postmarked or received in that office on or before December 31, 2003. Copies of these

petitions are available for inspection at that address.

Dated at Arlington, Virginia, this 17th day of November, 2003.

**Marvin W. Nichols, Jr.,**

*Director, Office of Standards, Regulations, and Variances.*

[FR Doc. 03–29746 Filed 11–28–03; 8:45 am]

BILLING CODE 4510–43–P

## NUCLEAR REGULATORY COMMISSION

**[Docket No. 52–009]**

### System Energy Resources, Inc.; Notice of Acceptance of Application for Early Site Permit for the Grand Gulf ESP Site

On October 21, 2003, the Nuclear Regulatory Commission (NRC, the Commission) received an early site permit (ESP) application dated October 16, 2003, from System Energy Resources, Inc., a subsidiary of Entergy Corporation, filed pursuant to Section 103 of the Atomic Energy Act and 10 CFR part 52. The site selected for the application is property co-located with the Grand Gulf Nuclear Station near Port Gibson, Mississippi (the Grand Gulf ESP site). A notice of receipt and availability of this application was previously published in the **Federal Register** (68 FR 64665; November 14, 2003).

An applicant may seek an ESP in accordance with subpart A of 10 CFR part 52 separate from the filing of an application for a construction permit (CP) or combined license (COL) for a nuclear power facility. The ESP process allows resolution of issues relating to siting. At any time during the period of an ESP (up to 20 years), the permit holder may reference the permit in a CP or COL application.

The NRC staff has determined that System Energy Resources has submitted information in accordance with 10 CFR parts 2 and 52 that is sufficiently complete and acceptable for docketing. The Docket No. established for this application is 52–009. The NRC staff will perform a detailed technical review of the application, and docketing of the ESP application does not preclude the NRC from requesting additional information from the applicant as the review proceeds, nor does it predict whether the Commission will grant or deny the application. The Commission will conduct a hearing in accordance with 10 CFR 52.21 and will receive a report on the application from the Advisory Committee on Reactor Safeguards in accordance with 10 CFR 52.23. If the Commission then finds that the application meets the applicable standards of the Atomic Energy Act and the Commission's regulations, and that required notifications to other agencies and bodies have been made, the Commission will issue an ESP, in the form and containing conditions and limitations that the Commission finds appropriate and necessary.

In accordance with 10 CFR part 51, the Commission will also prepare an environmental impact statement for the proposed action. Pursuant to 10 CFR 51.26, and as part of the environmental scoping process, the staff intends to hold a public scoping meeting. Detailed information regarding this meeting will be included in a future **Federal Register** notice.

Finally, the Commission will announce, in a future **Federal Register** notice, the opportunity for petition for leave to intervene in the hearing required for this application by 10 CFR 52.21.

A copy of the System Energy Resources ESP application is available for public inspection at the Commission's Public Document Room (PDR), located at One White Flint North, 11555 Rockville Pike (first floor), Rockville, Maryland, and available to local residents at the Harriette Person Memorial Library in Port Gibson, Mississippi. It is also accessible electronically from the Agencywide Documents Access and Management System (ADAMS) Public Electronic Reading Room on the Internet at the NRC Web site, *http://www.nrc.gov/reading-rm/adams.html* (ADAMS Accession No. ML032960315). Persons who do not have access to ADAMS, or who encounter problems in accessing the documents located in ADAMS, should contact the NRC Public Document Room staff by telephone at 1–800–397–4209, 301–415–4737 or by e-mail to *pdr@nrc.gov.*

Dated at Rockville, Maryland, this 24th day of November, 2003.

For the Nuclear Regulatory Commission.

**James E. Lyons,**

*Program Director, New, Research and Test Reactors Program, Division of Regulatory Improvement Programs, Office of Nuclear Reactor Regulation.*

[FR Doc. 03–29791 Filed 11–28–03; 8:45 am]

BILLING CODE 7590–01–P

## NUCLEAR REGULATORY COMMISSION

### Licensing Support Network; Advisory Review Panel

**AGENCY:** Nuclear Regulatory Commission.

**ACTION:** Notice of public meeting.

**SUMMARY:** The Licensing Support Network Advisory Review Panel (LSNARP) will hold its next meeting on Tuesday December 9, 2003, at the Alexis Park, located at 375 East Harmon, Las Vegas, Nevada 89109. The meeting will be open to the public pursuant to the Federal Advisory Committee Act (Pub. L. 94–463, 86 Stat. 770–776).

*Agenda:* The meeting will be held from 8:30 a.m. to 5 p.m. on Tuesday, December 9. The preliminary agenda includes the topics listed below. Additional details regarding timing of presentations and changes to the agenda may be obtained through the contacts listed below and will be announced prior to the meeting.

1. Introductory Remarks—NRC/LSNARP
2. Proposed changes to 10 CFR part 2 and Guidance for Submission of Electronic Docket Materials under 10 CFR part 2, subpart J—NRC–OGC/OCIO
3. Status of the revision to the Topical Guidelines.—NRC–OGC/NMSS
4. Status of LSN Expansion Activities and New Electronic Information Exchange Interface—NRC–LSA/OCIO
5. Participation of ARP in testing of document submission process—NRC/LSNARP
6. Status of loading NRC's collection—NRC–LSA/OCIO/NMSS
   —types of problems the NRC has addressed in spidering by the LSN.
   —''Lessons learned'' in conversion of NRC's legacy documents, such as CNWRA
7. Progress of potential parties in identifying and making their docs available to the LSN. Discussion of problems and solutions in processing and publishing, and meeting the requirements of part 2—NRC/LSNARP

**SUPPLEMENTARY INFORMATION:** The LSN is an internet based electronic discovery database being developed to aid the NRC in complying with the schedule for decision on the construction authorization for the high-level waste repository contained in section 114(d) of the Nuclear Waste Policy Act of 1982, as amended. In 1998, the NRC Rules of Practice in 10 CFR part 2, subpart J, were modified to provide for the creation and operation of the LSN, an internet-based technological solution to the submission and management of records and documents relating to the licensing of a geologic repository for the disposal of high-level radioactive waste (63 FR 71729). Pursuant to 10 CFR 2.1011(d), the agency has chartered the LSNARP, an advisory committee that

provides advice to the NRC on fundamental issues relating to LSN design, operation, maintenance, and compliance monitoring.

**FOR FURTHER INFORMATION CONTACT:** U.S. Nuclear Regulatory Commission, Office of the Secretary, Mail Stop O–16 C1, Washington, DC 20555–0001; Attn: Andrew Bates (telephone 301–415–1963; e-mail *ALB@NRC.GOV*) or Atomic Safety and Licensing Board Panel, Mail Stop T–3 F23, Attn: Jack G. Whetstine (telephone 301–415–7391; e-mail *JGW@NRC.GOV*).

*Public Participation:* Interested persons may make oral presentations to the LSNARP or file written statements. An oral presentations request should be made to one of the contact persons listed above as far in advance as practicable so that appropriate arrangements can be made.

Dated: November 21, 2003.

**Andrew L. Bates,**

*Advisory Committee Management Officer.*

[FR Doc. 03–29792 Filed 11–28–03; 8:45 am]

**BILLING CODE 7590–01–P**

## NUCLEAR REGULATORY COMMISSION

### Guidance to Federal Financial Assistance Recipients Regarding Title VI Prohibition Against National Origin Discrimination Affecting Limited English Proficient Persons

**AGENCY:** Nuclear Regulatory Commission.

**ACTION:** Notice of proposed guidance.

**SUMMARY:** The U.S. Nuclear Regulatory Commission (NRC) is publishing for public comment the proposed policy guidance on Title VI's prohibition against national origin discrimination as it affects limited English proficient persons.

**DATES:** Comments must be submitted on or before December 31, 2003.

**ADDRESSES:** Interested persons should submit written comments to Michael T. Lesar, Chief, Rules and Directives Branch, Office of Administration, U.S. Nuclear Regulatory Commission, Mail Stop: T–6D59, Washington, DC 20555–0001. Comments may also be submitted by facsimile to 301–415–5144, or by e-mail to *nrcrep@nrc.gov.*

**FOR FURTHER INFORMATION CONTACT:** Marva C. Gary, Civil Rights Program Manager, at 301–415–7382, TDD 301–415–5244, or by e-mail at *mcg@nrc.gov.*

**SUPPLEMENTARY INFORMATION:** Title VI of the Civil Rights Act of 1964, 42 U.S.C. 2000d, *et seq.* and its implementing regulations provide that no person shall be subjected to discrimination on the basis of race, color, or national origin under any program or activity that receives Federal financial assistance. In Executive Order 13166, reprinted at 64 FR 50119 (August 16, 2000), federal grant agencies are directed to issue guidance to their respective recipients of federal financial assistance on ensuring meaningful access to their programs and activities by persons with limited English proficiency (LEP). Executive Order 13166 further requires that agency guidance be consistent with the compliance standards set out in Department of Justice Policy Guidance issued contemporaneous with the Executive Order and published at 65 FR 50123 (August 16, 2000).

On October 26, 2001 and January 11, 2002, the Assistant Attorney General for Civil Rights issued to Federal departments and agencies guidance memoranda, which reaffirmed the Department of Justice's commitment to ensuring that federally assisted programs and activities fulfill their LEP responsibilities, which clarified and answered certain questions raised regarding the August 16th publication. On March 14, 2002, the Office of Management and Budget (OMB) issued a Report To Congress titled ''Assessment of the Total Benefits and Costs of Implementing Executive Order No. 13166: Improving Access to Services for Persons with Limited English Proficiency.'' Among other things, the Report recommended the adoption of uniform guidance across all Federal agencies, with flexibility to permit tailoring to each agency's specific recipients. Consistent with the OMB recommendation, the Department of Justice (DOJ) published LEP Guidance for DOJ recipients which was drafted and organized to also function as a model for similar guidance by other Federal grant agencies. The proposed NRC guidance is consistent with the model LEP Guidance document published by DOJ.

It has been determined that this guidance does not constitute a regulation subject to the rulemaking requirements of the Administrative Procedure Act, 5 U.S.C. 553. It has also been determined that this guidance document is not subject to the requirements of Executive Order 12866.

The text of the complete proposed guidance document appears below.

For the Nuclear Regulatory Commission.

**William F. Kane,**

*Acting Executive Director for Operations.*

### Guidance to Federal Financial Assistance Recipients Regarding Title VI Prohibition Against National Origin Discrimination Affecting Limited English Proficient Persons

*I. Introduction*

Most individuals living in the United States read, write, speak and understand English. There are many individuals, however, for whom English is not their primary language. For instance, based on the 2000 census, over 26 million individuals speak Spanish and almost 7 million individuals speak an Asian or Pacific Island language at home. If these individuals have a limited ability to read, write, speak, or understand English, they are limited English proficient, or ''LEP.'' While detailed data from the 2000 census has not yet been released, 26 percent of all Spanish-speakers, 29.9 percent of all Chinese-speakers, and 28.2 percent of all Vietnamese-speakers reported that they spoke English ''not well'' or ''not at all'' in response to the 1990 census.

Language for LEP individuals can be a barrier to accessing important benefits or services, understanding and exercising important rights, complying with applicable responsibilities, or understanding other information provided by federally funded programs and activities. The Federal Government funds an array of services that can be made accessible to otherwise eligible LEP persons. The Federal Government is committed to improving the accessibility of these programs and activities to eligible LEP persons, a goal that reinforces its equally important commitment to promoting programs and activities designed to help individuals learn English.

In certain circumstances, failure to ensure that LEP persons can effectively participate in or benefit from federally assisted programs may violate the prohibition under Title VI of the Civil Rights Act of 1964, 42 U.S.C. 2000d and Title VI regulations against national origin discrimination. The purpose of this policy guidance is to assist recipients in fulfilling their responsibilities to provide meaningful access to LEP persons under existing law. This policy guidance clarifies existing legal requirements for LEP persons by providing a description of the factors recipients should consider in fulfilling their responsibilities to LEP

persons.[1] These are the same criteria the United States Nuclear Regulatory Commission (NRC) will use in evaluating whether recipients are in compliance with Title VI.

Before discussing these criteria in greater detail, it is important to note two basic underlying principles. First, we must ensure that federally assisted programs aimed at the American public do not leave some behind simply because they face challenges communicating in English. Second, we must achieve this goal while finding constructive methods to reduce the costs of LEP requirements on recipients of Federal financial assistance.

There are many productive steps that the Federal government, either collectively or as individual grant agencies, can take to help recipients reduce the costs of language services without sacrificing meaningful access for LEP persons. To that end, the NRC in conjunction with the Department of Justice (DOJ), plans to continue to provide assistance and guidance in this important area. In addition, the NRC plans to work with its recipients and LEP persons to identify and share model plans, examples of best practices, and cost-saving approaches.

Moreover, the NRC intends to explore how language assistance measures, resources and cost-containment approaches developed with respect to its own federally conducted programs and activities can be effectively shared or otherwise made available to recipients. An interagency working group on LEP has developed a Web site: *http://www.lep.gov.* to assist in disseminating this information to recipients, Federal agencies, and the communities being served.

In cases where a recipient of Federal financial assistance from the NRC also receives assistance from one or more other Federal agencies, there is no obligation to conduct and document separate data, when the data would be identical and for the same purpose. The same analyses and language assistance plans can be used. The NRC, in discharging its compliance and enforcement obligations under Title VI, will look to analyses performed and plans developed in response to similar detailed LEP guidance issued by other Federal agencies. Accordingly, as an adjunct to this guidance, recipients may, where appropriate, also rely on guidance issued by other agencies in discharging their Title VI LEP obligations.

Many commentators have noted that some have interpreted the case of *Alexander* v. *Sandoval,* 532 U.S. 275 (2001), as impliedly striking down the regulations promulgated under Title VI that form the basis for the part of Executive Order 13166 that applies to federally assisted programs and activities. The NRC and DOJ have taken the position that this is not the case, and will continue to do so. Accordingly, NRC will strive to ensure that federally assisted programs and activities work in a way that is effective for all eligible beneficiaries, including those with English proficiency.

*II. Legal Authority*

Section 601 of Title VI of the Civil Rights Act of 1964, 42 U.S.C. 2000d, provides that no person shall ''on the ground of race, color, or national origin, be excluded from participation in, be denied the benefits of, or be subjected to discrimination under any program or activity receiving Federal financial assistance.'' Section 602 authorizes and directs Federal agencies that are empowered to extend Federal financial assistance to any program or activity ''to effectuate the provisions of [section 601] * * * by issuing rules, regulations, or orders of general applicability.'' 42 U.S.C. 2000d–1.

In pertinent part, the NRC's regulations promulgated pursuant to section 602 forbid recipients from ''utiliz[ing] criteria for methods of administration which have the effect of subjecting individuals to discrimination because of their race, color, or national origin, or have the effect of defeating or substantially impairing accomplishment of the objectives of the program [with respect to] individuals of a particular race, color, or national origin.'' *See* 10 CFR part 4 subpart A section 4.12(b) [29 FR 19277, December 31, 1964].

The Supreme Court, in *Lau* v. *Nichols,* 414 U.S. 563 (1974), interpreted regulations promulgated by the former Department of Health, Education, and Welfare, including language identical to that of 45 CFR part 1110, to hold that Title VI prohibits conduct that has a disproportionate effect on LEP persons because such conduct constitutes national-origin discrimination. In *Lau*, a San Francisco school district that had a significant number of non-English speaking students of Chinese origin was required to take reasonable steps to provide them with a meaningful opportunity to participate in federally funded educational programs.

On August 11, 2000, Executive order 13166, ''Improving Access to Services for Persons with Limited English Proficiency,'' (65 FR 50121; August 16, 2000), was issued. Under that Order, every Federal agency that provides financial assistance to non-Federal entities must publish guidance on how their recipients can provide meaningful access to LEP persons and thus comply with Title VI regulations forbidden funding recipients from ''[restricting] and individual in any way in the enjoyment of any advantage or privilege enjoyed by others receiving any service, financial aid, or other benefit under the program'' or from ''utiliz[ing] criteria or methods of administration which have the effect of subjecting individuals to discrimination because of their race, color, or national origin, or have the effect of defeating or substantially impairing accomplishment of the objectives of the program as respects individuals of a particular race, color, or national origin.''

On that same day, DOJ issued a general guidance document addressed to ''Executive Agency Civil Rights Officers'' setting forth general principles for agencies to apply in developing guidance documents for recipients pursuant to the Executive Order. ''Enforcement of Title VI of the Civil Rights Act of 1964 National Origin Discrimination Against Persons With Limited English Proficiency,'' (65 FR 50123; August 16, 2000) (''DOJ LEP Guidance'').

Subsequently, Federal agencies raised questions regarding the requirements of the Executive Order, especially in light of the Supreme Court's decision in *Alexander* v. *Sandoval,* 532 U.S. 275 (2001). On October 26, 2001, Ralph F. Boyd, Jr., Assistant Attorney General for the Civil Rights Division, issued a memorandum for ''Heads of Departments and Agencies, General Counsels and Civil Rights Directors.'' This memorandum clarified and reaffirmed the DOJ LEP guidance in light of *Sandoval.*[2] The Assistance

[1] The policy guidance is not a regulation but rather a guide. Title VI and its implementing regulations require that recipients take reasonable steps to ensure meaningful access by LEP persons. This guidance provides an analytical framework that recipients may use to determine how best to comply with statutory and regulatory obligations to provide meaningful access to the benefits, services, information, and other important portions of their programs and activities for individuals who are limited English proficient.

[2] The memorandum noted that some commentators have interpreted *Sandoval* as impliedly striking down the disparate-impact regulations promulgated under Title VI that form the basis for the part of Executive Order 13166 that applies to Federally assisted programs and activities. *See e.g., Sandoval,* 532 U.S. at 286, n.6 (''[W]e assume for purposes of this decision that section 602 confers the authority to promulgate disparate-impact regulations; * * * We cannot help observing, however, how strange it is to say that disparate-impact regulations are 'inspired by, at the service of, and inseparably intertwined with' Sec. 601 * * * when Sec. 601 permits the very behavior that the regulations forbid.''). The memorandum,

Continued

Attorney General stated that because *Sandoval* did not invalidate any Title VI regulations that proscribe conduct that has a disparate impact on covered groups—the types of regulations that form the legal basis for the part of Executive Order 13166 that applies to federally assisted programs and activities—the Executive Order remains in force.

This guidance is thus published pursuant to Executive Order 13166.

*III. Who Is Covered?*

The NRC regulations at 10 CFR part 4, subpart A require all recipients of Federal financial assistance from the NRC to provide meaningful access to LEP persons.[3] Federal financial assistance includes grants, training, use of equipment, donations of surplus property, and other assistance. Recipients of assistance from the NRC typically include, but are not limited to:

- Educational systems, universities, colleges, and research institutions;
- Day care center providers;
- Food service providers;
- Emergency response entities;
- State Health and Radiological Offices;
- Fitness center providers;
- Profit and non-profit organizations and institutions;
- Healthcare center providers; and
- Professional societies.

Subrecipients are also covered when Federal funds are passed through from one recipient to a subrecipient.

Coverage extends to a recipient's entire program or activity; *i.e.,* to all parts of a recipient's operations. This is true even if only one part of the recipient receives Federal assistance.[4]

Finally, some recipients operate in jurisdictions in which English has been declared the official language. Nonetheless, these recipients continue to be subject to Federal non-discrimination requirements, including those applicable to the provision of federally assisted services to persons with limited English proficiency.

*IV. Who Is a Limited English Proficient Individual?*

Individuals who do not speak English as their primary language and who have a limited ability to read, write, speak, or understand English can be limited English proficient, or ''LEP,'' entitled to language assistance with respect to a particular type of service, benefit, or encounter.

Examples of populations likely to include LEP persons who are encountered and/or served by the NRC's recipients and should be considered when planning language services include, but are not limited to:

- Persons reasonably likely to be subject to emergency evacuation measures;
- Residents located in reasonable proximity to NRC-licensed facilities;
- Persons served by or subject to state health and radiological offices; and
- Students and faculty at colleges and universities with associated research centers.

*V. How Does a Recipient Determine the Extent of Its Obligation To Provide LEP Services?*

Recipients are required to take reasonable steps to ensure meaningful access to their programs and activities by LEP persons. While designed to be a flexible and fact-dependent standard, the starting point is an individualized assessment that balances the following four factors: (1) The number or proportion of LEP persons eligible to be served or likely to be encountered by the program or grantee; (2) the frequency with which LEP individuals come in contact with the program; (3) the nature and importance of the program, activity, or service provided by the program to people's lives; and (4) the resources available to the grantee/recipient and costs. As indicated above, the intent of this guidance is to suggest a balance that ensures meaningful access by LEP persons to critical services while not imposing undue burdens on small state and local governments or small nonprofit entities.

After applying the above four-factor analysis, a recipient may conclude that different language assistance measures are sufficient for the different types of programs or activities in which it engages. For instance, some of a recipient's activities will be more important than others or have greater impact on or contact with LEP persons, and thus may require more in the way of language assistance. The flexibility that recipients have in addressing the needs of the LEP populations they serve does not diminish, and should not be used to minimize, the obligation that those needs be addressed. The NRC's recipients should apply the following four factors to the various kinds of contacts that they have with the public to assess language needs and decide what reasonable steps they should take to ensure meaningful access for LEP persons.

(1) The Number or Proportion of LEP Persons Served or Encountered in the Eligible Service Population

One factor in determining what language services recipients should provide is the number of proportion of LEP persons from a particular language group served or encountered in the eligible service population. The greater the number or proportion of these LEP persons, the more likely language services are needed. Ordinarily, persons ''eligible to be served, or likely to be directly, by'' a recipient's's program or activity are those who are served or encountered in the eligible population. This population will be program-specific, and includes persons who are in the geographic are that has been approved by a Federal grant agency as the recipient's's service area. However, where, for instance, a research facility or university operates a day care center limited to children of recipient personnel, and that extended groups include a significant LEP population, the appropriate service area is most likely the pool of eligibles from which the center draws its potential participants. When considering the number or proportion of LEP individuals in a service area, recipients providing services to minor LEP individuals should also include the individual's LEP parent(s) or primary caretaker(s) among those likely to be encountered.

Recipients should first examine their prior experiences with LEP encounters and determine the breadth the scope of language services that were needed. In conducting this analysis, it is important to include language minority populations that are eligible for their programs or activities, but may be under-services because of existing language barriers. Other data should be consulted to refine or validate a recipient's prior experience, including the latest census data for the area served, data from school systems and from community organizations, and data from state and local governments.[5]

however, made clear that DOJ disagreed with the commentators' interpretation. *Sandoval* holds principally that there is no private right of action to enforce Title VI disparate-impact regulations. It did not address the validity of those regulations or Executive Order 13166 or otherwise limit the authority and responsibility of Federal grant agencies to enforce their own implementing regulations.

[3] Pursuant to Executive Order 13166, the meaningful access requirement of the Title VI regulations and the four-factor analysis set forth in the DOJ LEP guidance are to additionally apply to the Federally conducted programs and activities of Federal agencies, including the NRC.

[4] However, if a Federal agency were to decide to terminate Federal funds based on noncompliance with Title VI or its regulations, only funds directed to the particular program or activity that is out of compliance would be terminated. 42 U.S.C. 2000d–1.

[5] The focus of the analysis is on lack of English proficiency, not the ability to speak more than one language. Note that demographic data may indicate

Community agencies, school systems, religious organizations, legal aid entities, and others can often assist in identifying populations for whom outreach is needed and who would benefit from the recipients programs and activities where language services are provided.

(2) The Frequency With Which LEP Individuals Come in Contact With the Program

Recipients should assess, as accurately as possible, the frequency with which they have or should have contact with an LEP individual from different language groups seeking assistance. The more frequent the contact with a particular language group, the more likely that enhanced language services in that language are needed. The steps that are reasonable for a recipient that serves and LEP person on a one-time basis will be very different from those expected from a recipient that serves LEP persons daily.

It is also advisable to consider the frequency of different types of language contacts. For example, frequent contacts with Spanish-speaking people who are LEP may require certain assistance in Spanish. Less frequent contact with different language groups may suggest a different and less intestified solution. If an LEP individual accesses a program or service on a daily basis, a recipient has greater duties than if the same individual's program or activity contact is unpredictable or infrequent. Recipients that serve LEP persons on an unpredictable or infrequent basis should use this balancing analysis to determine what to do if an LEP individual seeks services under the program in question. This plan need not be intricate. It may be as simple as using one of the commercially-available telephonic interpretation services to obtain immediate interpreter services. In applying this standard, recipients should take care to consider whether appropriate outreach to LEP persons could increase the frequency of contact with LEP language groups.

(3) The Nature and Importance of the Program, Activity, or Service Provided by the Program

The more important the activity, information, service, or program, or the greater the possible consequences of the contact to the LEP individuals, the more likely language services are needed. For example, due to its direct impact on the public, the obligations of a federally assisted state health and radiological office enforcing health and safety standards are generally far greater than those of a federally assisted science or engineering program. A recipient needs to determine whether denial or delay of access to services or information could have serious or even life-threatening implications for the LEP individual. Decisions by a Federal, state, or local entity to make an activity compulsory, such as participation in an educational program or compliance with emergency procedures, can serve evidence of the program's importance. While all situations must be analyzed on a case-by-case basis, the following general observations may be helpful to the NRC's recipients considering the implications of applying this factor of the four-factor test to their respective programs:

- An assisted local environmental protection office providing information on radiological hazards and charged with responsibility to receive and investigate environmental complaints that serves in a city with a large Hispanic population including a significant number of LEP members should consider translating at least come of its informational pamphlets and its complaint form into Spanish (or implementing a procedure through which Spanish-speaking LEP persons could be served by Spanish-speaking officers). This same office could also consider Spanish summaries of its vital but technical or complex public documents as a possible alternative to full text translations.
- Assisted emergency response entities serving a significant LEP community which are part of an emergency evacuation plan coordinated by an NRC Licensed Facility should consider either for themselves or as part of a coordinated plan on the part of related entities:

(1) Employing of bilingual State Liaison Officers, or staff members capable of providing timely and vital information in the language and dialogue of the LEP population located in the vicinity of the NRC licensed facility;

(2) Ensuring that the LEP population has access to emergency evacuation information, procedures for filing complaints of contamination, hazards, safety concerns, or denial of access;

(3) Posting and disseminating information in the language of the LEP population, in high stress situations; and

(4) Identifying individuals or community groups who might serve as bilingual volunteers with a small LEP population.

As part of a language assistance emergency response plan, such recipients could, for example, consider reliance upon a telephonic interpretation service that is fast enough and reliable enough to attend to the emergency situation, or include some other accommodation short of hiring bilingual staff.

With respect to the importance of a program, activity, or service provided by one of the Agency's recipients, the obligation to provide interpretation or translation services will most likely be greatest in educational/training situations or in connection with the provisions of safety, and/or emergency evacuation services. Entities that receive Federal financial assistance from another agency such as the Department of Education, may rely on the more particularized LEP guidance of that other agency to ensure compliance with the obligation to provide meaningful access in those respective contexts.

(4) The Resources Available to the Recipient and Costs

A recipient's level of resources and the cost that would be imposed on it may have an impact on the nature of the steps it should take. Smaller recipients with more limited budgets are not expected to provide the same level of language services as larger recipients with larger budgets. In addition, ''reasonable steps'' may cease to be reasonable where the costs imposed substantially exceed the benefits.

Resource and cost issues, however, can often be reduced by technological advances; the sharing of language assistance materials and services among and between recipients, advocacy groups, and Federal grant agencies; and reasonable business practices. Where appropriate, training bilingual staff to act as interpreters and translators, information sharing through industry groups, telephonic and video conferencing interpretation services, pooling resources and standardizing documents to reduce translation needs, using qualified translators and interpreters to ensure that documents need not be ''fixed'' later and that inaccurate interpretations do not cause delay or other costs, centralizing

the most frequently spoken languages other than English and the percentage of people who speak that language who speak or understand English less than well. Some of the most commonly spoken languages other than English may be spoken by people who are also overwhelmingly proficient in English. Thus, they may not be the languages spoken most frequently by limited English proficient individuals. When using demographic data, it is important to focus in on the languages spoken by those who are not proficient in English.

interpreter and translator services to achieve economies of scale, or the formalized use of qualified community volunteers, for example, may help reduce costs.[6] Recipients should carefully explore the most cost-effective means of delivering competent and accurate language services before limiting services due to resource concerns. Large entities and those entities serving a significant number or proportion of LEP persons should ensure that their resource limitations are well-substantiated before using this factor as a reason to limit language assistance. These recipients may find it useful to be able to articulate, through documentation or in some other reasonable manner, their process for determining that language services would be limited based on resources or costs.

This four-factor analysis necessarily implicates the ''mix'' of LEP services required. Recipients have two main ways to provide language services: Oral interpretation either in person or via telephone interpretation service (hereinafter ''interpretation''), and written translation (hereinafter ''translation''). Oral interpretation can range from onsite interpreters for critical services provided to a high volume of LEP persons to access through commercially-available telephonic interpretation services. A written translation can range from translation of an entire document to translation of a short description of the document. In some cases, language services should be made available on an expedited basis while in others the LEP individual may be referred to another office of the recipient for language assistance.

The correct mix should be based on what is both necessary and reasonable in light of the four-factor analysis. Regardless of the type of language service provided, quality and accuracy of those service can be critical to avoid serious consequences to the LEP person and to the recipient. Recipients have substantial flexibility in determining the appropriate mix.

*VI. Selecting Language Assistance Service*

Recipients have two main ways to provide language services: oral and written language services. Quality and accuracy of the language service is critical to avoid serious consequences to the LEP person and to the recipient.

A. Oral Language Services (Interpretation)

Interpretation is the act of listening to something in one language (source language) and orally translating it into another language (target language). Where interpretation is needed and is reasonable, recipients should consider some or all of the following options for providing competent interpreters in a timely manner:

*Competence of Interpreters.* When providing oral assistance, recipients should ensure competency of the language service provider no matter which of the strategies outlined below are used. Competency requires more than self-identification as bilingual. Some bilingual staff and community volunteers, for instance, may be able to communicate effectively in a different language when communicating information directly in that language, but not be competent to interpret in and out of English. Also, they may not be able to do written translations.

Competency to interpret, however, does not necessarily mean formal certification as an interpreter, although certification is helpful. When using interpreters, recipients should ensure that they:

- Demonstrate proficiency in an ability to communicate information accurately in both English and in the other language and identify and employ the appropriate mode of interpreting (*e.g.,* consecutive, simultaneous, summarization, or sight translation);
- Have knowledge in both languages of any specialized terms or concepts peculiar to the entity's program or activity and of any particularized vocabulary and phraseology used by the LEP person;[7] and, if applicable, understand and follow confidentiality and impartiality rules to the same extent the recipient employee for whom they are interpreting and/or to the extent their position requires; and
- Understand and adhere to their role as interpreters without deviating into any other role such as counselor, or advisor.

Some recipients may have additional self-imposed requirements for interpreters. Where individual rights depend on precise, complete, and accurate interpretation or translations, the use of certified interpreters is strongly encouraged.[8] Where such proceedings are lengthy, the interpreter will likely need breaks and team interpreting may be appropriate to ensure accuracy and to prevent errors caused by mental fatigue of interpreters. The NRC recognizes, however, that such situations are infrequent in the types of programs and activities it typically funds.

While quality and accuracy of language services is critical, the quality and accuracy of language services is nonetheless part of the appropriate mix of LEP services required. The quality and accuracy of language services in compulsory educational classes, for example, must be quite while the quality and accuracy of language services in translation of general public announcements, need not meet the same exacting standards.

Finally, when interpretation is needed and is reasonable, it should be provided in a timely manner. To be meaningfully effective, language assistance should be timely. While there is no single definition for ''timely'' applicable to all types of interactions at all times by all types of recipients, one clear guide is that the language assistance should be provided at a time and place that avoids the effective denial of the service, benefit, or right at issue or the imposition of an undue burden on or delay in important rights, benefits, or services to the LEP person. Conversely, where access to or exercise of a service, benefit, or right is not effectively precluded by a reasonable delay, language assistance can likely be delayed for a reasonable period.

*Hiring Bilingual Staff.* When particular languages are encountered often, hiring bilingual staff offers one of the best, and often most economical, options. Recipients and sub-recipients can, for example, fill public contact positions, such as program directors, with staff who are bilingual and competent to communicate directly with LEP persons in their language and at the appropriate level of competency. Similarly, a State Liaison Officer or a State Tribal Program serving an area with a significant LEP population could seek to match individuals with limited English skills with language-appropriate bilingual mentors. If bilingual staff are also used to interpret between English

[6] Small recipients with limited resources may find that entering into a bulk telephonic interpretation service contract will prove cost effective.

[7] Many languages have ''regionalism,'' or differences in usage. For instance, a word that may be understood to mean something in Spanish for someone from Cuba may not be so understood by someone from Mexico. In addition, because there may be languages which do not have an appropriate direct interpretation of some terms and, the interpreter should be so aware and be able to provide the most appropriate interpretation. The interpreter should likely make the recipient aware of the issue and the interpreter and recipient can then work to develop a consistent and appropriate set of descriptions of these terms in that language that can be used again, when appropriate.

[8] For those languages in which no formal accreditation or certification currently exists, courts and law enforcement agencies should consider a formal process for establishing the credentials of the interpreter.

speakers and LEP persons, or to orally interpret written documents from English into another language, they should be competent in the skill of interpreting. Being bilingual does not necessarily mean that a person has the ability to interpret. In addition, there may be times when the role of the bilingual employee may conflict with the role of an interpreter (for instance, a bilingual member of a formal review panel adjudicating allegations of program or fiscal noncompliance would probably not be able to perform effectively the role of interpreter and adjudicator at the same time, even if the bilingual employee were a qualified interpreter). Effective management strategies, including any appropriate adjustments in assignments and protocols for using bilingual staff, can ensure that bilingual staff are fully and appropriately used. When bilingual staff cannot meet all of the language service obligations of the recipient, the recipient should turn to other options.

*Hiring Staff Interpreters.* Hiring interpreters may be most helpful where there is a frequent need for interpreting services in one or more languages. Depending on the facts, sometimes it may be necessary and reasonable to provide onsite interpreters to provide accurate and meaningful communication with an LEP person.

*Contracting for Interpreters.* Contract interpreters may be a cost-effective option when there is not regular need for a particular language skill. In addition to commercial and other private providers, many community-based organizations and mutual assistance associations provide interpretation services for particular languages. Contracting with and providing training regarding the recipient's programs and processes to these organizations can be a cost-effective option for providing language services to LEP persons from those language groups.

*Using Telephone Interpreter Lines.* Telephone interpreter service lines often offer speedy interpreting assistance in many different languages in public-contact situations. They may be particularly appropriate where the mode of communicating with a LEP proficient person would also be over the phone. Although telephonic interpretation services are useful in many situations, it is important to ensure that, when using these services, the interpreters are competent to interpret any technical terms specific to a particular program that may be important parts of the conversation. Nuances in language and non-verbal communication can often assist an interpreter and cannot be recognized over the phone. Video teleconferencing may sometimes help to resolve this issue where necessary. In addition, when discussing documents, it is important to give telephonic interpreters adequate opportunity to review the document prior to the discussion, and to address any logistical problems.

*Using Community Volunteers.* In addition to consideration of bilingual staff, staff interpreters, or contract interpreters (either in-person or by telephone) as options to ensure meaningful access to LEP persons, use of recipient-coordinated community volunteers, working with, for instance, community-based organizations may provide a cost-effective supplemental language assistance strategy under appropriate circumstances. They may be particularly useful in providing language access for a recipient's less critical programs and activities. To the extent the recipient relies on community volunteers, it is often best to use volunteers who are trained in the information or services of the program and can communicate directly with LEP persons in their language. Just as with all interpreters, community volunteers skilled in interpreting between English speakers and LEP persons, or when sight translating documents, one should be competent in the skill of interpreting, and knowledgeable about applicable confidentiality and partiality rules, if any. Recipients should consider formal arrangements with community-based organizations that provide volunteers to address these concerns and to help ensure that services are available more regularly.

*Use of Family Members or Friends as Interpreters.* Although recipients should not plan to rely on an LEP person's family members, friends, or other informal interpreters to provide meaningful access to important programs and activities they should be permitted to use, at their own expense, an interpreter of their own choosing (whether a professional interpreter, family member, or friend) in place of or as a supplement to the free language services expressly offered by the recipient. LEP persons may feel more comfortable when a trusted family member or friend acts as an interpreter. In addition, in exigent circumstances that are not reasonably foreseeable, temporary use of interpreters not provided by the recipient may be necessary. However, with proper planning and implementation, recipients should be able to avoid most of these situations.

Recipients, however, should take special care to ensure that family, legal guardians, caretakers, and other informal interpreters are appropriate in light of the circumstances and subject matter of the program, service or activity, including protection of the recipient's own interest in accurate interpretation. In many circumstances, family member (especially children) or friends are not competent to provide quality and accurate interpretations. Issues of confidentiality, privacy, or conflict of interest may also arise. LEP individuals may feel uncomfortable revealing or describing confidential information to a family member, friend, or member of the local community. In addition, these informal interpreters may have a personal connection to the LEP person or an undisclosed conflict of interest. For these reasons, when oral language services are necessary, recipients should generally offer competent interpreter services free of cost to the LEP person.

While issues of competency, confidentiality, and conflict on interest in the use of family members or friends often make their use inappropriate, the use of these individuals as interpreters may be an appropriate option where proper application of the four factors would lead to a conclusion that recipient-provided services are not necessary. An example of this might be to use, as one part of a public information program, language-capable community groups or volunteers to help provide oral notice or disseminate written postings about important public meetings. There, the nature of the activity may be unlikely to implicate issues of confidentiality, conflict of interest, or the need for accuracy. In addition, the resources needed and costs of providing language services may be high. In such a setting, an LEP person's use of family, friends, or others may be appropriate.

If the LEP person voluntarily chooses to provide his or her own interpreter, a recipient should consider whether a record of that choice and of the recipient's offer of assistance is appropriate. Where precise, complete, and accurate interpretations or translations of information and/or testimony are critical, or where the competency of the LEP person's interpreter is not established, a recipient might decide to provide its own, independent interpreter, even if an LEP person wants to use his or her own interpreter as well. Extra caution should be exercised when the LEP person chooses to use a minor as the interpreter. While the LEP person's decision should be respected, there may be additional issues of competency, confidentiality, or conflict of interest

when the choice involves using children as interpreters. The recipient should take care to ensure that the LEP person's choice is voluntary, that the LEP person is aware of the possible problems if the preferred interpreter is a minor child, and that the LEP person knows that a competent interpreter could be provided by the recipient at no cost.

B. Written Language Services (Transition)

Translation is the replacement of a written text from one language (source language) into an equivalent written text in another language (target language).

*What Documents Should Be Translated?* After applying the four-factor analysis, a recipient may determine that an effective LEP plan for its particular program or activity includes the translation of vital written materials into the language of each frequently-encountered LEP group eligible to be served and/or likely to be affected by the recipient's program.

These written materials could include, for example:

- Notices advising LEP persons of free language assistance;
- Written tests that do not assess English language competency, but test competency for a particular license, job, or skill for which knowing English is not required; or
- Applications to participate in a recipient's program or activity or to receive recipient benefits, grants, or services.

Whether a document (or the information it solicits) is ''vital'' may depend upon the importance of the program, information, encounter, or service involved, and the consequence to the LEP person if the information in question is not provided accurately or in a timely manner. Where appropriate, recipients are encouraged to create a plan for consistently determining, over time and across its various activities, what documents are ''vital'' to the meaningful access of the LEP populations they serve.

Classifying a document as vital or non-vital is sometimes difficult, especially in the case of outreach materials like brochures or other information on rights and services. Awareness of rights or services is an important part of ''meaningful access.'' Lack of awareness that a particular program, right, or service exists may effectively deny LEP individuals meaningful access. Thus, where a recipient is engaged in community outreach activities in furtherance of its activities, it should regularly assess the needs of the populations frequently encountered or affected by the program or activity to determine whether certain critical outreach materials should be translated. Community organizations may be helpful in determining what outreach materials may be most helpful to translate. In addition, the recipient should consider whether translations of outreach material may be made more effective when done in tandem with other outreach methods, including using the ethnic media, schools, religious, and community organizations to spread a message.

Sometimes a document includes both vital and non-vital information. This may be the case when the document is very large. It may also be the case when the title and a phone number for obtaining more information on the contents of the document in frequently-encountered languages other than English is critical, but the document is sent out to the general public and cannot reasonably be translated into many languages. Thus, vital information may include, for instance, the provision of information in appropriate languages other than English regarding where a LEP person might obtain an interpretation or translation of the document.

*Into What Languages Should Documents Be Translated?* The languages spoken by the LEP individuals with whom the recipient has contact determine the languages into which vital documents should be translated. A distinction should be made, however, between languages that are frequently encountered by a recipient and less commonly-encountered languages. Many recipients serve communities in large cities or across the country. They regularly serve LEP persons who speak dozens and sometimes over 100 different languages. To translate all written materials into all of those languages is unrealistic. Although recent technological advances have made it easier for recipients to store and share translated documents, such an undertaking would incur substantial costs and require substantial resources. Nevertheless, well-substantiated claims of lack of resources to translate all vital documents into dozens of languages do not necessarily relieve the recipient of the obligation to translate those documents into at least several of the more frequently-encountered languages and to set benchmarks for continued translations into the remaining language over time. As a result, the extent of the recipient's obligation to provide written translations of documents should be determined by the recipient on a case-by-case basis, looking at the totality of the circumstances in light of the four-factor analysis. Because translation is a one-time expense, consideration should be given to whether the up-front cost of translating a document (as opposed to oral interpretation) should be amortized over the likely lifespan of the document when applying this four-factor analysis.

*Safe Harbor.* Many recipients would like to ensure with greater certainty that they comply with their obligations to provide written translations in languages other than English. Paragraphs (a) and (b), under *Safe Harbor Guides,* outline the circumstances that can provide a ''safe harbor'' for recipients regarding the requirements for translation of written materials. A ''safe harbor'' means that if a recipient provides written translations under these circumstances, such action will be considered strong evidence of compliance with the recipient's written-translation obligations.

The failure to provide written translations under the circumstances outlined in paragraphs (a) and (b), under *Safe Harbor Guides,* does not mean there is non-compliance. Rather, they provide a common starting point for recipients to consider whether and at what point the importance of the service, benefit, or activity is involved; the nature of the information sought; and the number or proportion of LEP persons served call for written translations of commonly-used forms into frequently-encountered languages other than English. Thus, these paragraphs merely provide a guide for recipients that would like greater certainty of compliance than can be provided by a fact-intensive, four-factor analysis.

Example: Even if the safe harbors are not used, if written translation of a certain document(s) would be so burdensome as to defeat the legitimate objectives of its program, the translation of the written materials is not necessary. Other ways of providing meaningful access, such as effective oral interpretation of certain vital documents, might be acceptable under these circumstances.

*Safe Harbor Guides.* The following actions will be considered strong evidence of compliance with the recipient's written-translation obligations:

(a) The recipient provides written translations of vital documents for each eligible LEP language group that constitutes five percent or 1,000, whichever is less, of the population of persons eligible to be served or likely to be affected or encountered. Translation of other documents, if needed, can be provided orally; or

(b) If there are fewer than 50 persons in a language group that reaches the five percent trigger in (a), the recipient does not translate vital written materials but provides written notice in the primary language of the LEP language group of the right to receive competent oral interpretation of those written materials, free of cost.

These safe harbor provisions apply to the translation of written documents only. They do not effect the requirement to provide meaningful access to LEP individuals through competent oral interpreters where oral language services are needed and are reasonable.

The NRC acknowledges that it provides assistance to a wide range of programs and activities serving different geographic areas with varying populations. Moreover, as noted above, the obligation to consider translations applies only to a recipient's vital documents having a significant impact on access rather than all types of documents used or generated by a recipient in the course of its activities. For these reasons, a strict reliance on the numbers of percentages set out in the safe harbor standards may not be appropriate for all of the NRC's recipients and for all their respective programs or activities. While the safe harbor standards outlined above offer a common guide, the decision as to what documents should be translated should ultimately be governed by the underlying obligation under Title VI to provide meaningful access by LEP persons by ensuring that the lack of appropriate translations of vital documents does not adversely impact upon an otherwise eligible LEP persons ability to access its programs or activities.

*Competence of Translators.* As with oral interpreters, translators of written documents should be competent. Many of the same considerations apply. However, the skill of translating is very different from the skill of interpreting, and a person who is a competent interpreter may or may not be competent to translate.

Particularly where vital documents are being translated, competence can often be achieved by use of certified translators. Certification or accreditation may not always be possible or necessary.[9] Competence can often be ensured by having a second, independent translator ''check'' the work of the primary translator. Alternatively, one translator can translate the document, and a second, independent translator could translate it back into English to check that the appropriate meaning has been conveyed. This is called ''back translation.''

Translators should understand the expected reading level of the audience and, where appropriate, have fundamental knowledge about the target language group's vocabulary and phraseology. Sometimes direct translation of materials results in a translation that is written at a much more difficult level than the English language version or has no relevant equivalent meaning.[10] Community organizations may be able to help consider whether a document is written at a good level for the audience. Likewise, consistency in the words and phrases used to translate terms of art, or other technical concepts helps avoid confusion by LEP individuals and may reduce costs. Creating or using already-created glossaries of commonly-used terms may be useful for LEP persons and translators and cost effective for the recipient. Providing translators with examples of previous accurate translations of similar material by the recipient, other recipients, or Federal agencies may be helpful.

While quality and accuracy of translation services is critical, it is nonetheless part of the appropriate mix of LEP services required. For instance, documents that are simple and have no significant consequence for LEP persons who rely on them may use translators that are less skilled than important documents with legal or other information upon which reliance has important consequences. The permanent nature of written translations, however, imposes additional responsibility on the recipient to ensure that the quality and accuracy permit meaningful access by LEP persons.

*VII. Elements of Effective Plan on Language Assistance for LEP Persons*

After completing the four-factor analysis and deciding what language assistance services are appropriate, a recipient should develop an implementation plan to address the identified needs of the LEP populations they serve. Recipients have considerable flexibility in developing this plan. The development and maintenance of a periodically-updated written plan on language assistance for LEP persons (''LEP plan'') for use by recipient employees serving the public will likely be the most appropriate and cost-effective means of documenting compliance and providing a framework for the provision of timely and reasonable language assistance. Moreover, these written plans would provide additional benefits to a recipient's managers in the areas of training, administration, planning, and budgeting. These benefits should lead most recipients to document their language assistance services in a written LEP plan, and show how the staff and LEP persons can access those services. Despite these benefits, certain recipients, such as recipients serving very few LEP persons and recipients with very limited resources, may choose not to develop a written LEP plan. However, the absence of a written LEP plan does not obviate the underlying obligation to ensure meaningful access by LEP persons to a recipient's program or activities. Accordingly, in the event that a recipient elects not to develop a written plan, he/she should consider alternative ways to articulate in some other reasonable manner a plan for providing meaningful access. Entities having significant contact with LEP persons, such as schools, religious organizations, community groups, and groups working with new immigrants can be very helpful in providing important input into this planning process from the beginning.

The following five steps may be helpful in designing an LEP plan and are typically part of effective implementation plans.

(1) Identifying LEP Individuals Who Need Language Assistance.

The first two factors in the four-factor analysis require an assessment of the number or proportion of LEP individuals eligible to be served or encountered and the frequency of encounters. This requires recipients to identify LEP persons with whom it has contact.

One way to determine the language of communication is to use language identification cards (or ''I speak cards''),

[9] For those languages in which no formal accreditation currently exists, a particular level of membership in a professional translation association can provide some indicator of professionalism.

[10] There may be languages which do not have an appropriate direct translation of some terms and the translator should be able to provide an appropriate translation. The translator should likely also make the recipient aware of this. Recipients can then work with translators to develop a consistent and appropriate set of descriptions of these terms in that language that can be used again, when appropriate. Recipients will find it more effective and less costly if they try to maintain consistency in the words and phrases used to translate terms of art and legal or other technical concepts. Creating or using already-created glossaries of commonly used terms may be useful for LEP persons and translators and cost effective for the recipient. Providing translators with examples of previous translations of similar material by the recipient, other recipients, or Federal agencies may be helpful.

which invite LEP persons to identify their language needs to staff. Such cards, for instance, might say ''I speak Spanish'' in both Spanish and English, ''I speak Vietnamese'' in both English and Vietnamese, etc. When records are normally kept of past interactions with members of the public, the language of the LEP person can be included as part of the record. In addition to helping employees identify the language of LEP persons they encounter, this process will help in future applications of the first two factors of the four-factor analysis. In addition, positing notices in commonly encountered languages notifying LEP persons of language assistance will encourage them to self-identify.

(2) Language Assistance Measures.

An effective LEP plan would likely include information about the ways in which language assistance will be provided. For instance, recipients may want to include information on at least the following:

- Types of language services available;
- How staff can obtain those services;
- How to respond to LEP callers;
- How to respond to written communications from LEP persons;
- How to respond to LEP individuals who have in-person contact with recipient staff; and
- How to ensure competency of interpreters and translation services.

(3) Training Staff.

Staff should know their obligations to provide meaningful access to information and services for LEP persons. An effective LEP plan would likely include training to ensure that:

- Staff know about LEP policies and procedures; and
- Staff having contact with the public are trained to work effectively with in-person and telephone interpreters.

Recipients may want to include this training as part of the orientation for new employees. It is important to ensure that all employees in public contact positions are properly trained. Recipients have flexibility in deciding the manner in which the training is provided. The more frequent the contact with LEP persons, the greater the need will be for in-depth training. Staff with little or no contact with LEP persons may only have to be aware of an LEP plan. However, management staff, even if they do not interact regularly with LEP persons, should be fully aware of and understand the plan so they can reinforce its importance and ensure its implementation by staff.

(4) Providing Notice to LEP Persons.

Once an organization has decided, based on the four factors, that it will provide language services, it is important for the recipient to let LEP persons know that those services are available and that they are free of charge. Recipients should provide this notice in a language LEP persons will understand. Examples of notification that recipients should consider include:

- Posting signs in intake areas and other entry points. When language assistance is needed to ensure meaningful access to information and services, it is important to provide notice in appropriate languages in intake areas or initial points of contact so that LEP persons can learn how to access those language services. For instance, signs in intake offices could state that free language assistance is available. The signs should be translated into the most common languages encountered. They should explain how to get the language help.[11]
- Stating in outreach documents that language services are available from the agency. Announcements could be in brochures, booklets, and in outreach and recruitment information. These statements should be translated into the most common languages and could be ''tagged'' onto the front of common documents.
- Working with community-based organizations and other stakeholders to inform LEP individuals of the recipients' services, including the availability of language assistance services.
- Using a telephone voice mail menu. The menu could be in the most common languages encountered. It should provide information about available language assistance services and how to get them.
- Including notices in local newspapers in languages other than English. Providing notices on non-English-language radio and television stations about the available language assistance services and how to get them.
- Presentations and/or notices at schools and religious organizations.

(5) Monitoring and Updating the LEP Plan.

Recipients should, where appropriate, have a process for determining, on an ongoing basis, whether new documents, programs, services, and activities need to be made accessible for LEP individuals, and they may want to provide notice of any changes in services to the LEP public and to employees. In addition, recipients should consider whether changes in demographics, types of services, or other needs require annual reevaluation of their LEP plan. Less frequent reevaluation may be more appropriate where demographic services, and needs are more static. One way to evaluate the LEP plan is to seek feedback from the community.

In their reviews, recipients may want to consider assessing changes in:

- Current LEP populations in service area or population affected or encountered;
- Frequency of encounters with LEP language groups;
- Nature and importance of activities to LEP persons;
- Availability of resources, including technological advances and sources of additional resources, and the costs imposed;
- Whether existing assistance is meeting the needs of LEP persons;
- Whether staff knows and understands the LEP plan and how to implement it; and
- Whether identified sources for assistance are still available and viable.

In addition to these five elements, effective plans set clear goals, management accountability, and opportunities for community input and planning throughout the process.

*VIII. Voluntary Compliance Effort*

The goal for Title VI regulatory enforcement is to achieve voluntary compliance. The requirement to provide meaningful access to LEP persons is enforced and implemented by the NRC through the procedures identified in the Title VI regulations. These procedures include compliant investigations, compliance reviews, efforts to secure voluntary compliance, and technical assistance.

The Title VI regulations provide that the NRC will investigate whenever it receives a compliant, report, or other information that alleges or indicates possible noncompliance with Title VI or its regulations. If the investigation results in a finding of compliance, the NRC will inform the recipient in writing of this determination, including the basis for the determination. The NRC uses voluntary mediation to resolve most complaints. However, if a case is fully investigated and results in a finding of noncompliance, the NRC must inform the recipient of the noncompliance through a Letter of Findings that sets out the areas of noncompliance and the steps that must be taken to correct the noncompliance. It must attempt to secure voluntary compliance through informal means. If the matter cannot be resolved informally, the NRC must secure

[11] The Social Security Administration has made such signs available at *http://www.ssa.gov/multilanguage/langlist1.htm*. These signs could, for example, be modified for recipient use.

compliance through the termination of Federal assistance after the recipient has been given an opportunity for an administrative hearing and/or by referring the matter to a DOJ litigation section to seek injunctive relief or pursue other enforcement proceedings. The NRC engages in voluntary compliance efforts and provides technical assistance to recipients at all stages of an investigation. During these efforts, the NRC proposes reasonable timetables for achieving compliance and consult with and assist recipients in exploring cost-effective ways of coming into compliance. In determining a recipient's compliance with the Title VI regulations, the NRC's primary concern is to ensure that the recipient's policies and procedures provide meaningful access for LEP persons to the recipient's programs and activities.

While all recipients must work toward building systems that will ensure access for LEP individuals, the NRC acknowledges that the implementation of a comprehensive system to serve LEP individuals is a process and that a system will evolve over time as it is implemented and periodically reevaluated. As recipients take reasonable steps to provide meaningful access to federally assisted programs and activities for LEP persons, the NRC will look favorably on intermediate steps recipients take that are consistent with this guidance, and that, as part of a broader implementation plan or schedule, move their service delivery system toward providing full access to LEP persons. This does not excuse noncompliance but instead recognizes that full compliance in all areas of a recipient's activities and for all potential language minority groups may reasonable require a series of implementing actions over a period of time. However, in developing any phased implementation schedule, recipients should ensure that the provision of appropriate assistance for significant LEP populations or with respect to activities having a significant impact on the health, safety, legal rights, or livelihood of beneficiaries is addressed first. Recipients are encouraged to document their efforts to provide LEP persons with meaningful access to federally assisted programs and activities.

In determining a recipient entity's compliance with Title VI, the NRC's primary concern is to ensure that the entity's policies and procedures overcome barriers resulting from language differences that would deny LEP persons a meaningful opportunity to participate in and access programs, services, and benefits. A recipient entity's appropriate use of the methods and options discussed in this policy guidance is viewed by the NRC as evidence of that entity's willingness to comply voluntarily with its Title VI obligations.

[FR Doc. 03–29790 Filed 11–28–03; 8:45 am]

BILLING CODE 7590–01–M

## SECURITIES AND EXCHANGE COMMISSION

**[Release No. IC–26263; 812–12966]**

## Lehman Brothers Inc., et al.; Notice of Application

November 24, 2003.

**AGENCY:** Securities and Exchange Commission (''Commission'').

**ACTION:** Notice of application for a permanent order under section 9(c) of the Investment Company Act of 1940 (''Act'').

**SUMMARY OF APPLICATION:** On October 31, 2003, the Commission issued a temporary order (''Temporary Order'') and notice of application for a permanent order (''Original Notice'') under section 9(c) of the Act.[1] This notice reflects that Neuberger Berman, LLC (''Neuberger LLC'') and Neuberger Berman Management Inc. (''Neuberger Management,'' and together with Neuberger LLC, the ''Neuberger Applicants'') were added as named applicants after the issuance of the Original Notice. The Temporary Order, which also applied to the Neuberger Applicants, remains effective as issued.

**APPLICANTS:** Lehman Brothers Inc. (''Lehman''), Lehman Brothers Asset Management Inc. (''LBAM''), Lincoln Capital Fixed Income Management Company, LLC (''Lincoln Capital''), and the Neuberger Applicants (together, the ''Applicants'').[2]

**FILING DATES:** The application was filed on April 28, 2003, and amended on November 21, 2003. Applicants have agreed to file amendments to the application reflecting the issuance of each State Injunction (as defined below).

**HEARING OR NOTIFICATION OF HEARING:** An order granting the application will be issued unless the Commission orders a hearing. Interested persons may request a hearing by writing to the Commission's Secretary and serving Applicants with a copy of the request, personally or by mail. Hearing requests should be received by the Commission by 5:30 p.m. on December 19, 2003, and should be accompanied by proof of service on Applicants, in the form of an affidavit, or for lawyers, a certificate of service. Hearing requests should state the nature of the writer's interest, the reason for the request, and the issues contested. Persons who wish to be notified of a hearing may request notification by writing to the Commission's Secretary.

**ADDRESSES:** Secretary, Commission, 450 Fifth Street, NW., Washington, DC 20549–0609. Applicants, Lehman, 745 Seventh Avenue, New York, NY 10019; LBAM, 399 Park Avenue, New York, NY 10022; Lincoln Capital, 200 S. Wacker Drive, Suite 2100, Chicago, IL 60606; and the Neuberger Applicants, 605 Third Avenue, New York, NY 10158.

**FOR FURTHER INFORMATION CONTACT:** Marc R. Ponchione, Senior Counsel, at (202) 942–7927, or Todd F. Kuehl, Branch Chief, at 202–942–0564 (Division of Investment Management, Office of Investment Company Regulation).

**SUPPLEMENTARY INFORMATION:** The following is summary of the application. The complete application may be obtained for a fee at the Commission's Public Reference Branch, 450 Fifth Street, NW., Washington, DC 20549–0102 (telephone 202–942–8090).

### Applicants' Representations

1. Lehman, a Delaware corporation, is a full service investment banking firm, which, among other activities, engages in securities offerings, including initial public offerings, secondary offerings and debt financings, and provides merger and acquisition and other services. LBAM serves as investment adviser to one registered investment company (''Fund''), Lincoln Capital serves as investment subadviser for eight Funds, and the Neuberger Applicants serve as investment adviser, sub-adviser, principal underwriter, or depositor to one or more Funds. Lehman acts as the depositor or principal underwriter for one or more Funds.[3]

2. On October 31, 2003, the U.S. District Court for the Southern District of New York entered an injunction (the ''Federal Injunction'') against Lehman in

[1] Invest Company Act Release No. 26241 (October 31, 2003).

[2] Applicants request that any relief granted pursuant to the application also apply to any other company of which Lehman is or hereafter becomes an affiliated person (included in the term Applicants).

[3] Any registered unit investment trusts (''UIT'') or registered face amount certificate company for which Applicants may serve as principal underwriter or depositor are also included in the defined term Funds.

a matter brought by the Commission.[4] The Commission alleged in the complaint (''Complaint'') that Lehman violated certain Conduct Rules of the National Association of Securities Dealers (''NASD'') and Rules of the New York Stock Exchange (''NYSE'') (the NASD Conduct Rules and NYSE Rules together, the ''Exchange Rules'') by engaging in acts and practices that created or maintained inappropriate influence by Lehman's investment banking business (the ''Investment Banking Department'') over the research analysts in Lehman's research department (the ''Research Department''). The Federal Injunction enjoined Lehman directly or through its officers, directors, agents and employees, from violating the specific rules cited in the Complaint. Without admitting or denying the allegations in the Complaint, Lehman consented to the entry of the Federal Injunction as well as the payment of disgorgement and penalties and other equitable relief. Applicants state that Lehman expects to enter into settlement agreements relating to the activities referred to in the Complaint with certain state and territorial agencies which may result in an injunction by a court of competent jurisdiction that is based on the same conduct and the same facts as the Complaint (each, a ''State Injunction,'' and, together with the Federal Injunction, the ''Injunctions''). Applicants request that this application cover any disqualifications of the Applicants under section 9(a) of the Act resulting from the Injunctions.

**Applicants' Legal Analysis**

1. Section 9(a)(2) of the Act, in relevant part, prohibits a person who has been enjoined from engaging in or continuing any conduct or practice in connection with the purchase or sale of a security from acting, among other things, as an investment adviser or depositor of any registered investment company or a principal underwriter for any registered open-end investment company, registered UIT or registered face-amount certificate company. Section 9(a)(3) of the Act makes the prohibition in section 9(a)(2) applicable to a company, any affiliated person of which has been disqualified under the provisions of section 9(a)(2). Section 2(a)(3) of the Act defines ''affiliated person'' to include any person directly or indirectly controlling, controlled by, or under common control with, the other person. Lehman is an affiliated person of each of LBAM, Lincoln Capital, and the Neuberger Applicants within the meaning of section 2(a)(3) of the Act. Applicants further state that the entry of the Injunctions would result in Applicants being subject to the disqualification provisions of section 9(a) of the Act.

2. Section 9(c) of the Act provides that the Commission shall grant an application for exemption from the disqualification provisions of section 9(a) if it is established that these provisions, as applied to Applicants, are unduly or disproportionately severe or that the Applicants' conduct has been such as not to make it against the public interest or the protection of investors to grant the application. Applicants filed an application pursuant to section 9(c) seeking temporary and permanent orders exempting them from the disqualification provisions of section 9(a) of the Act.[5]

3. Applicants believe they meet the standard for exemption specified in section 9(c). Applicants state that the prohibitions of section 9(a) as applied to them would be unduly and disproportionately severe and that the conduct of Applicants has been such as not to make it against the public interest or the protection of investors to grant the exemption from section 9(a).

4. Applicants state that the conduct giving rise to the Injunctions did not involve any of the Applicants acting in the capacity of investment adviser, subadviser, depositor, or principal underwriter for a Fund.[6] Applicants state that the Complaint did not expressly reference the conduct of any current or former officer or employee of Lehman who is or was involved in providing underwriting services to the Funds underwritten by Lehman.[7] While LBAM's, Lincoln Capital's, and the Neuberger Applicants' portfolio managers may have had access to research reports issued by the Research Department, there is no indication that the portfolio managers relied on these research reports more than any other data that would have been considered by the portfolio managers in making investment decisions for the Funds.[8] Although some of the Funds held securities in their portfolios at the time that Lehman issued research reports concerning the issuers of such securities, Applicants state that Lincoln Capital and the Neuberger Applicants were not acquired by Lehman Holdings, and LBAM did not begin serving as investment adviser to any Fund, until after the time period covering the conduct that forms the basis for the Injunctions. As far as Lehman is aware, none of the current or former officers, employees, portfolio managers, or any other investment personnel employed by Lehman, who is or was involved in providing principal underwriting services to the Funds, acted in their capacity as such based on any non-public information relating to the conduct underlying the Injunctions. In addition, each of the Applicants that serve or may serve as an investment adviser or sub-adviser to Funds has adopted policies regarding information barriers designed to protect the Funds from any conflict of interest that may arise between portfolio managers and other employees of Lehman.

5. The Applicants have or will distribute written materials, including an offer to meet in person to discuss the materials, to the board of directors or trustees of each Fund that it advises, subadvises, or principally underwrites (each, a ''Board''), including the directors or trustees who are not ''interested persons,'' as defined in section 2(a)(19) of the Act, of the Fund, and their independent legal counsel, if any, regarding the Injunctions, any impact on the Funds, and this application.[9] The Applicants will provide the Boards with all information concerning the Injunctions and this application that is necessary for the Funds to fulfill their disclosure and

[4] *Securities and Exchange Commission* v. *Lehman Brothers Inc.,* 03 Civ. 2940 (WHP) (S.D.N.Y., filed April 28, 2003) (the ''Action'').

[5] On October 31, 2003, the Commission issued the Temporary Order exempting Applicants, including the Neuberger Applicants, from the provisions of section 9(a) until the date the Commission takes final action on their application for a permanent order or, if earlier, October 31, 2005 (Investment Company Act Release No. 26241).

[6] Lehman Brothers Holdings Inc. (''Lehman Holdings''), the ultimate parent company of the Applicants, acquired Lincoln Capital on January 31, 2003, and acquired the Neuberger Applicants on October 31, 2003. The only Fund advised by LBAM was first registered on May 7, 2003. Each of these events occurred after the conduct giving rise to the Injunctions.

[7] The Complaint also refers to general practices regarding the relationship between the Investment Banking and Research Departments. It is possible that one or more current or former officers or employees of the Applicants, who is or was involved in providing advisory, sub-advisory or underwriting services to the Funds, was at some time an officer or employee of the Investment Banking or Research Departments.

[8] Lehman states that it acts as principal underwriter to certain UITs whose portfolio securities were selected by an unaffiliated third party depositor based on information published by the Research Department.

[9] The Applicants also will advise the Boards of any State Injunctions that are issued. With respect to the UITs discussed in footnote 6, Lehman states that it has provided or will provide written notification to the trustees for each of these UITs and their independent depositor concerning the Injunctions, any impact on the UITs, and this Application, and will provide any other related information that may be requested by the trustees or independent depositors.

other obligations under the federal securities laws.

6. Applicants state that the inability to continue providing advisory services to the Funds and the inability to continue serving as principal underwriter to the Funds would result in potentially severe hardships for the Funds and their shareholders. Applicants also assert that, if they were barred from providing services to the Funds, the effect on their businesses and employees would be severe. The Applicants state that they have committed substantial resources to establish an expertise in advising and distributing Funds. Lehman and certain affiliated persons of Lehman previously have received exemptions under section 9(c) as the result of conduct that triggered section 9(a) as described in greater detail in the Application.

**Applicants' Condition**

Applicants agree that any order granting the requested relief will be subject to the following condition:

Any temporary exemption granted pursuant to the application shall be without prejudice to, and shall not limit the Commission's rights in any manner with respect to, any Commission investigation of, or administrative proceedings involving or against, Applicants, including without limitation, the consideration by the Commission of a permanent exemption from section 9(a) of the Act requested pursuant to the application or the revocation or removal of any temporary exemptions granted under the Act in connection with the application.

For the Commission, by the Division of Investment Management, under delegated authority.

**Margaret H. McFarland,**

*Deputy Secretary.*

[FR Doc. 03–29799 Filed 11–28–03; 8:45 am]

BILLING CODE 8010–01–P

## SECURITIES AND EXCHANGE COMMISSION

### Sunshine Act Meetings

Notice is hereby given, pursuant to the provisions of the Government in the Sunshine Act, Pub. L. 94–409, that the Securities and Exchange Commission will hold the following meetings during the week of December 1, 2003:

Closed Meetings will be held on Tuesday, December 2, 2003 at 2 p.m. and Thursday, December 4, 2003 at 4 p.m., and Open Meetings will be held on Wednesday, December 3, 2003 at 10 a.m., in Room 1C30, the William O. Douglas Room and Thursday, December 4, 2003 at 3 p.m., in Room 1C30, the William O. Douglas Room.

Commissioner Goldschmid, as duty officer, determined that no earlier notice thereof was possible.

Commissioners, Counsel to the Commissioners, the Secretary to the Commission, and recording secretaries will attend the Closed Meetings. Certain staff members who have an interest in the matters may also be present.

The General Counsel of the Commission, or his designee, has certified that, in his opinion, one or more of the exemptions set forth in 5 U.S.C. 552b(c) (5), (6), (7), 9(B) and (10) and 17 CFR 200.402(a) (5), (6), (7), (9)(ii) and (10), permit consideration of the scheduled matters at the Closed Meetings.

Commissioner Goldschmid, as duty officer, voted to consider the items listed for the closed meeting in closed sessions.

The subject matter of the Closed Meeting scheduled for Tuesday, December 2, 2003 will be:

Formal orders of investigation;

Institution and settlement of administrative proceedings of an enforcement nature;

Regulatory matter regarding a financial institution;

Adjudicatory matter; and

Institution and settlement of injunctive actions.

The subject matter of the Open Meeting scheduled for Wednesday, December 3, 2003 will be:

1. The Commission will consider whether to adopt new rule 38a–1 under the Investment Company Act, new rule 206(4)–7 under the Investment Advisers Act, and amendments to rule 204–2 under the Advisers Act. These rules and rule amendments would require each investment company (''fund'') and each investment adviser registered with the Commission to adopt and implement compliance policies and procedures, to review those policies and procedures periodically for their adequacy and the effectiveness of their implementation, and to designate a chief compliance officer who, in the case of funds, would report directly to the board.

For further information, please contact Hester Peirce at (202) 942–0690 or Jamey Basham at (202) 942–0719.

The Commission will also consider whether to propose amendments to rule 22c–1 under the Investment Company Act of 1940 designed to eliminate late trading of redeemable securities issued by a registered investment company (''fund''). The proposed amendments would require that an order to purchase or redeem fund shares be received by the fund, its primary transfer agent, or a registered securities clearing agency, by the time that the fund establishes for calculating its net asset value in order to receive that day's price.

For further information, please contact Adam B. Glazer or Penelope W. Saltzman at (202) 942–0690.

2. The Commission will consider whether to propose amendments to Forms N–1A, N–3, N 4, and N–6 under the Securities Act of 1933 and the Investment Company Act of 1940. The proposals would (1) require open-end management investment companies and variable insurance products to disclose in their prospectuses information about the risks of, and policies and procedures with respect to, the frequent purchase and redemption of investment company shares; (2) clarify that open-end management investment companies and insurance company managed separate accounts that offer variable annuities are required to explain both the circumstances under which they will use fair value pricing and the effects of using fair value pricing; and (3) require open end management investment companies and insurance company managed separate accounts that offer variable annuities to disclose their policies with respect to disclosure of portfolio holdings information.

For further information, please contact Kieran G. Brown or Sanjay Lamba at (202) 942 0721.

The subject matter of the Open Meeting scheduled for Thursday, December 4, 2003 will be:

The Commission will hear oral argument on an appeal by Enron Corporation from an initial decision of an administrative law judge. The law judge denied Enron's applications for exemption from the provisions of the Public Utility Holding Company Act of 1935 (''Act''). In the first application, filed April 12, 2000, Enron requested an exemption pursuant to Sections 3(a)(3) and 3(a)(5) of the Act. The law judge denied that application, finding that Enron failed to show that it is only incidentally a public utility holding company and that it does not derive a material part of its income from its public utility subsidiary, Portland General Electric Company. In its second application, filed on February 28, 2002, and amended on May 31, 2002, Enron sought an exemption pursuant to Section 3(a)(1) of the Act. The law judge also denied that application, finding that Enron failed to show that Portland General is predominantly intrastate in character and that it carries on business substantially in a single state.

Enron contends that the law judge erred when she found that Enron was not entitled to the exemptions for which it applied. The Public Utility Commission of Oregon, which regulates

public utilities in Oregon and which was granted party status by the law judge, supports Enron's application for an exemption pursuant to Section 3(a)(1). The Division of Investment Management opposes Enron's applications and contends that Enron failed to establish that it qualifies for any of the statutory exemptions for which it applied.

Among the issues likely to be considered is whether Enron has established that it is entitled to an exemption under Sections 3(a)(1), 3(a)(3), or 3(a)(5) of the Act.

For further information, please contact the Office of the Secretary at (202) 942–7070.

The subject matter of the Closed Meeting scheduled for Thursday, December 4, 2003 will be:

Post-argument discussion.

At times, changes in Commission priorities require alterations in the scheduling of meeting items. For further information and to ascertain what, if any, matters have been added, deleted or postponed, please contact:

The Office of the Secretary at (202) 942–7070.

Dated: November 26, 2003.

**Jonathan G. Katz,**

*Secretary.*

[FR Doc. 03–29910 Filed 11–26–03; 11:16 am]

**BILLING CODE 8010–01–P**

---

## SECURITIES AND EXCHANGE COMMISSION

**[Release No. 35–27767]**

## Filings Under the Public Utility Holding Company Act of 1935, as Amended (''Act'')

November 21, 2003.

Notice is hereby given that the following filing(s) has/have been made with the Commission pursuant to provisions of the Act and rules promulgated under the Act. All interested persons are referred to the application(s) and/or declaration(s) for complete statements of the proposed transaction(s) summarized below. The application(s) and/or declaration(s) and any amendment(s) is/are available for public inspection through the Commission's Branch of Public Reference.

Interested persons wishing to comment or request a hearing on the application(s) and/or declaration(s) should submit their views in writing by December 15, 2003, to the Secretary, Securities and Exchange Commission, Washington, DC 20549–0609, and serve a copy on the relevant applicant(s) and/or declarant(s) at the address(es) specified below. Proof of service (by affidavit or, in the case of an attorney at law, by certificate) should be filed with the request. Any request for hearing should identify specifically the issues of facts or law that are disputed. A person who so requests will be notified of any hearing, if ordered, and will receive a copy of any notice or order issued in the matter. After December 15, 2003, the application(s) and/or declaration(s), as filed or as amended, may be granted and/or permitted to become effective.

### Great Plains Energy Incorporated (70–9861)

Great Plains Energy Incorporated (''GPE''), a registered public utility holding company; Kansas City Power & Light Company (''KCPL''), a public utility subsidiary company of GPE; Great Plains Power Incorporated (''GP Power'') a subsidiary company of GPE; [1] Kansas City Power & Light Receivables Company (''KCPL Receivables''), a nonutility subsidiary of KCPL; [2] all located at 1201 Walnut, Kansas City, MO 64106; and KLT, Inc., an intermediate holding company of GPE at 10740 Nall Street, Overland Park, KS 66211 (collectively, ''Applicants'') have filed an application-declaration (''Application'') under sections 6(a), 7, 9(a)(1), 10 and 12(c) of the Act and rules 45 and 46 under the Act.

### I. Prior Authorization

By order dated September 7, 2001 (HCAR No. 27436) (''September Order''), the Commission authorized GPE and its subsidiaries, among other things, to engage in (A) a program of external financing, (B) intrasystem credit support arrangements, (C) interest rate hedging measures, and (D) other intrasystem transactions from time to time through December 31, 2004 (''Authorization Period''). In particular, the Commission authorized GPE to issue and sell common stock and, directly or indirectly, short-term and long-term debt securities and other forms of preferred or equity-linked securities. The aggregate amount of all such securities issued by GPE during the Authorization Period was limited to $450 million under the conditions of the September Order, and the Commission reserved jurisdiction over (A) the retainability of KLT Investment II until October 1, 2004 and (B) payment of dividends by any nonexempt nonutility subsidiary.

### II. Current Requests

Applicants request that the current proposal supersede and replace the authorizations under the September Order through December 31, 2005 (''New Authorization Period'').

*A. Financing*

GPE requests authorization to issue and sell directly, or indirectly through financing subsidiaries, $1.2 billion in the aggregate amount of common stock, short term and long term debt securities and other forms of preferred or equity-linked securities. GPE may issue and sell common stock through underwriters or dealers, through agents, or directly to a limited number of purchasers or a single purchaser. Also, it requests authority to issue common stock, performance shares options, SARs, warrants or other stock purchase rights exercisable for common stock in public or privately negotiated transaction as consideration for the equity securities or assets of other existing companies, provided that the acquisition of any such equity securities or assets has been authorized in a separate proceeding or is exempt under the Act or the rules under the Act. GPE will directly issue preferred and equity-linked securities, including specifically, debt or preferred securities that are convertible, either manditorily or at the option of the holder, into common stock or GPE indebtedness and forward purchase contracts for common stock. Long term debt of GPE may be in the form of unsecured notes (''Debentures'') issued in one or more series. To provide for financing for general corporate purposes, other working capital requirements and investments in new enterprises until long-term financing can be obtained, GPE may sell, directly or indirectly through one or more financing subsidiaries, commercial paper or establish bank lines of credit.

KCPL requests authorization to issue and sell notes and other evidence of indebtedness having a maturity of one year or less in an aggregate principal amount outstanding at any one time not to exceed $500 million, including without limitation commercial paper, bank lines of credit, and other debt securities.[3]

---

[1] GPE states that GP Power currently is not an independent power producer (''IPP'') or an exempt wholesale generator (''EWG''), and has no interests in IPPS. It is engaged in certain preliminary project development and administrative activities, such as obtaining options to purchase real estate for a potential plant site, filing applications for air, wetlands and other pre-construction matters and filing a market-based rate schedule with the Federal Energy Regulatory Commission (''FERC'').

[2] KCPL Receivables engages in accounts receivables management.

[3] The issuance by KCPL of commercial paper and other short term indebtedness having a maturity of

GPE, the nonutility subsidiaries listed in Exhibit J (''Exhibit J Subsidiaries''), and any future nonutility subsidiaries request authority to make loans to any such associate company at interest rates and maturities designed to provide a return to the lending company of not less than its effective cost of capital when the borrowing Exhibit J Subsidiary is: (1) Not wholly-owned directly or indirectly by GPE and (2) does not sell goods or services to KCPL.

GPE and, to the extent not exempt pursuant to rule 52, KCP&L, the Exhibit J Subsidiaries, and any future nonutility subsidiaries request authorization to enter into interest rate hedging transactions with respect to existing indebtedness, subject to certain limitations and restrictions, in order to reduce or manage interest rate cost. Interest Rate Hedges would only be entered into with counterparties whose senior debt ratings, or the senior debt ratings of the parent companies of the counterparties, as published by Standard and Poor's Ratings Group, are equal to or greater than BBB, or an equivalent rating from Moody's Investors Service, Fitch, or Duff and Phelps.

*B. Guarantees*

GPE proposes to enter into guarantees and other forms of support agreements on behalf or for the benefit of any subsidiary during the New Authorization Period in an aggregate principal amount not to exceed $600 million outstanding at any one time.

Applicants also request authorization for nonutility subsidiaries to provide credit support on behalf and for the benefit of other nonutility subsidiaries in an aggregate principal amount not to exceed $300 million outstanding at any one time, exclusive of any guarantees and other forms of credit support exempt under rule 45(b)(7) or rule 52(b).

*C. Other Requests*

*Collectively the Applicants request authorization to:* (1) Change any wholly owned Exhibit J Subsidiary's capital stock capitalization; (2) acquire, directly or indirectly, the equity securities of one or more corporations, trusts, partnerships or other entities created specifically for the purpose of facilitating the financing of the authorized and exempt activities (''Financing Subsidiaries''); (3) acquire, directly or indirectly through a nonutility subsidiary, the securities of one or more new intermediate subsidiary companies which may be organized exclusively for the purpose of acquiring, holding and/or financing the acquisition of the securities of or other interest in one or more EWGs, foreign utility companies (''FUCOs''), exempt telecommunications companies, rule 58 companies or other nonutility subsidiaries (as authorized in this proceeding); and finally (4) on behalf of the following specified subsidiaries: GP Power; Innovative Energy Consultants Inc.; Home Service Solutions Inc.; Worry Free Service Inc.; KLT Inc., KLT Investments II Inc.; KLT Energy Services Inc.; Custom Energy Holdings, LLC; Strategic Energy LLC, KLT Gas Inc.; Apache Canyon Gas LLC; FAR Gas Acquisitions Corporation; Forest City, LLC; Forest City Gathering Company; and Patrick KLT Gas, LLC (collectively, ''Specified Subsidiaries'') that the Specified Subsidiaries be permitted to pay dividends out of capital and unearned surplus (including revaluation reserve), provided that no Specified Subsidiary at the time of payment derives any material part of its revenues from the sale of goods, services, electricity or natural gas to KCPL.

*D. Use of Proceeds*

GPE states that the proposed increase in the authorized limit on issuing common stock, short-term and long-term debt securities and other forms of preferred or equity-linked securities will enable it to (1) finance investments and capital expenditures by it and its subsidiaries, (2) to fund future investments in any exempt telecommunications company or energy-related or gas-related company within the meaning of rule 58, (3) to repay, redeem, refund or purchase by it or its subsidiaries of their respective securities, and (4) to finance the working capital requirements of it and its subsidiaries. GPE further states that the proposed increase in the authorized limit will provide additional liquidity to it and the ability to increase its equity to total capitalization ratio, which will strengthen its financial position and enhance its access to the capital markets. GPE does not request authority at this time to invest in EWGs or FUCOs.

More specifically, GPE requests authority to invest, directly or indirectly, up to $10 million in the aggregate in GP Power to be used for the same types of preliminary project development and administrative activities as described in the preceding paragraph without obtaining further authorization of the Commission; provided that if GP Power becomes an EWG, investments in GP Power may be made subject to the restrictions of rule 53 under the Act.[4]

*E. Financing Parameters*

1. Interest Rates on Indebtedness

The interest rate on long-term debt securities (debt securities having maturities of one year or more) issued to non-associate companies pursuant to Commission authorization will not exceed at the time of issuance the greater of (1) 500 basis points of the yield to maturity of a U.S. Treasury security having a remaining term approximately equal to the term of such debt, or (2) competitive market rates for securities of comparable credit quality with similar terms and features. The interest rate on GPE bank lines of credit and short-term debt securities (debt securities having maturities of less than one year) issued to non-associate companies pursuant to Commission authorization will not exceed at the time of issuance the greater of (i) 500 basis points over the comparable term London Interbank Offered Rate (''LIBOR''), or (ii) a gross spread over LIBOR that is consistent with similar securities of comparable credit quality with similar terms and features.

2. Investment Grade Ratings

Apart from securities issued either for intrasystem financings, or by KCPL in the form of commercial paper or short-term bank facilities, no guarantees or other securities, other than common stock, may be issued in reliance upon the authorization granted by the Commission unless (1) the security to be issued, if rated, is rated investment grade; (2) all outstanding securities of the issuer (except in the case of GPE, its preferred stock) that are rated are rated investment grade; and (3) all outstanding securities of GPE (except for GPE's preferred stock) that are rated are rated investment grade. The preferred stock of GPE currently is not rated investment grade. GPE currently has four series of preferred stock outstanding, each of which was originally issued by KCPL. These four series aggregate $39 million in face amount, or approximately 0.2% of GPE's consolidated capitalization. The below-investment grade rating on the preferred stock is a result of the rating agencies' methodology, which views preferred stock to be structurally subordinated to any debt issued by GPE. It would not be economically efficient

less than 12 months will not be exempt under rule 52(a) since it is not subject to approval by its state regulatory commission; however, KCPL must obtain the authorization of the Missouri Public Service commission for any mortgage or other encumbrance of KCPL franchise, works, or system.

[4] GPE has invested, directly or indirectly, approximately $3.3 million in GP Power as of September 30, 2003.

for GPE to redeem the preferred stock at this time.

3. Common Equity Capitalization

GPE & KCPL will not issue guarantees or other securities in reliance upon the authorization by the Commission unless, on a pro-forma basis, taking into account the issuance of guarantees, or other securities up to $1.2 billion, the consolidated common equity capitalization of GPE and KCPL will remain at least 30%.

*F. Services*

GPE requests authority for these new intermediate subsidiaries, as well as existing intermediate subsidiaries (collectively, the ''Intermediate Subsidiaries''), to provide management, administrative, project development and operating services to such entities at fair market prices determined without regard to cost, and therefore requests an exemption (to the extent that rule 90(d) does not apply) pursuant to section 13(b) from the cost standards of rules 90 and 91 as applicable to such transactions, in any case in which the nonutility subsidiary purchasing such goods or services is:

(1) A FUCO or foreign EWG that derives no part of its income, directly or indirectly, from the generation, transmission, or distribution of electric energy for sale within the United States;

(2) An EWG that sells electricity at market-based rates which have been approved by the FERC, provided that the purchaser is not KCPL;

(3) A ''qualifying facility'' (''QF'') within the meaning of the Public Utility Regulatory Policies Act of 1978, as amended (''PURPA'') that sells electricity exclusively (a) at rates negotiated at arms'-length to one or more industrial or commercial customers purchasing such electricity for their own use and not for resale, and/or (b) to an electric utility company at the purchaser's ''avoided cost'' as determined in accordance with the regulations under PURPA;

(4) A domestic EWG or QF that sells electricity at rates based upon its cost of service, as approved by FERC or any state public utility commission having jurisdiction, provided that the purchaser thereof is not KCPL; or

(5) A rule 58 subsidiary or any other nonutility subsidiary that (a) is partially-owned by GPE, provided that the ultimate purchaser of such goods or services is not KCPL (or any other entity that GPE may form whose activities and operations are primarily related to the provision of goods and services to KCPL), (b) is engaged solely in the business of developing, owning, operating and/or providing services or goods to nonutility subsidiaries described in clauses (1) through (4) immediately above, or (c) does not derive, directly or indirectly, any material part of its income from sources within the United States and is not a public utility company operating within the United States.

**Entergy Mississippi, Inc. (70–10157)**

Entergy Mississippi, Inc. (''Entergy Mississippi''), 308 East Pearl Street, Jackson, MI 39201, an electric utility subsidiary of Entergy Corporation, a registered holding company under the Act, has filed an application-declaration under sections 6(a), 7, 9(a), 10, 12(c), 12(d), 12(e), 32 and 33 of the Act and rules 42, 53, and 54 under the Act.

Entergy Mississippi seeks authorization to issue and sell, from time to time through March 31, 2007, up to $900 million combined aggregate principal amount of (a) its first mortgage bonds (''Bonds''), (b) its preferred stock (''Preferred Stock''), (c) unsecured long-term indebtedness (''Long-term Debt''), and, (d) directly or indirectly through one or more financing subsidiaries, other forms of preferred or equity-linked securities (''Equity Interests'') (collectively, ''Securities'').

The Bonds (a) may be subject to optional and/or mandatory redemption, in whole or in part, at par or at premiums above their principal amount, (b) may be entitled to mandatory or optional sinking fund provisions, (c) may be issued at fixed or floating rates of interest, (d) may provide for reset of the coupon under a remarketing arrangement, (e) may be called from existing investors by a third party, (f) may be backed by a bond insurance policy and (g) would have a maturity ranging from one year to 50 years. The maturity dates, interest rates, redemption and sinking fund provisions and conversion features, if any, with respect to the Bonds of a particular series, as well as any associated placement, underwriting or selling fees, commissions and discounts, if any, would be established by negotiation or competitive bidding. The maturity dates, interest rates, redemption and sinking fund provisions and conversion features, if any, with respect to Bonds of a particular series, as well as any associated placement, underwriting or selling agent fees, commissions and discounts, if any, would be established by negotiation or competitive bidding.

The Preferred Stock or Equity Interests may be issued in one or more series with whatever rights, preferences and priorities, including those related to redemption, are designated in the instrument creating each series. The Preferred Stock or Equity Interests may be redeemable or may be perpetual.

The Long-term Debt of a particular series (a) would be unsecured, (b) may be convertible into any other securities of Entergy Mississippi (except common stock), (c) would have a maturity ranging from one year to 50 years, (d) may be subject to optional and/or mandatory redemption, in whole or in part, at par or at premiums above its principal amount, (e) may be entitled to mandatory or optional sinking fund provisions, (f) may be issued at fixed or floating rates of interest, (g) may provide for reset of the coupon in accordance with a remarketing arrangement, and (h) may be called from existing investors by a third party. The maturity dates, interest rates, redemption and sinking fund provisions and conversion features, if any, with respect to Long-term Debt of a particular series, as well as any associated placement, underwriting or selling agent fees, commissions and discounts, if any, would be established by negotiation or competitive bidding. Entergy Mississippi states that it presently contemplates selling the Securities by competitive bidding, negotiated public offering or private placement.

Entergy Mississippi proposes to use the net proceeds derived from the issuance and sale of the Securities for general corporate purposes, including (a) financing its capital expenditures, (b) repaying, redeeming, refunding or purchasing any of its securities issued in accordance with rule 42 under the Act and/or those issued on Entergy Mississippi's behalf in accordance with section 9(c)(1) of the Act, and (c) financing its working capital requirements.

Entergy Mississippi also proposes to enter into arrangements to finance or refinance on a tax-exempt basis certain pollution control facilities and/or sewage or solid waste disposal facilities (''Facilities''). Entergy Mississippi proposes, from time to time through March 31, 2007, to enter into one or more leases, subleases, installment sale agreements, refunding agreements or other agreements (''Agreements'') and/or supplements and/or amendments to those Agreements (''Facilities Agreements'') with one or more issuing governmental authorities (''Authorities''), under which the Authority may issue one or more series of tax-exempt bonds (''Tax-exempt Bonds'') in an aggregate principal amount not to exceed $50 million (including the possible issuance and pledge by Entergy Mississippi of up to $55 million in aggregate principal

amount of Entergy Mississippi Collateral Bonds (as defined below), which $55 million is not included in the $900 million referenced above). The net proceeds from the sale of Tax-exempt Bonds would be applied to financing, or refinancing tax-exempt bonds issued for the purpose of financing, the Facilities. Entergy Mississippi further proposes, under the Facilities Agreement, to purchase, acquire, construct and install the Facilities unless the Facilities are already in operation. Under the Facilities Agreements, Entergy Mississippi would be obligated to make payments sufficient to pay the principal or redemption price of, premium, if any, and the interest on, and other amounts owing with respect to, the Tax-exempt Bonds, together with related expenses.

The Tax-exempt Bonds of a particular series (a) would have a maturity ranging from one year to 50 years, (b) may be subject to optional and/or mandatory redemption, in whole or in part, at par or at premiums above their principal amount, (c) may be entitled to mandatory or optional sinking fund provisions, (d) may be issued at fixed or floating rates of interest, (e) may provide for reset of the coupon under a remarketing arrangement, (f) may be called from existing investors by a third party, (g) may be backed by a municipal bond insurance policy, (h) may be supported by credit support such as a bank letter of credit and reimbursement agreement, (i) may be supported by a lien subordinate to EMI's Mortgage and Deed of Trust, as amended and supplemented both in the past and in the future (''Mortgage''), on the Facilities related to those Tax-exempt Bonds and (j) may be supported by the issuance and pledge of Bonds issued as collateral security for those Tax-exempt Bonds (''Collateral Bonds''). The maturity dates, interest rates, redemption and sinking fund provisions and conversion features, if any, with respect to Tax-exempt Bonds of a particular series, as well as any associated placement, underwriting or selling agent fees, commissions and discounts, if any, would be established by negotiation or competitive bidding.

Entergy Mississippi also proposes to enter into arrangements to issue up to $300 million in aggregate principal amount of municipal securities (''Municipal Securities'') (including the possible issuance and pledge by Entergy Mississippi of up to $350 million in aggregate principal amount of Entergy Mississippi Municipal Collateral Bonds (as defined below), which $350 million is not included in the $900 million referenced above). Entergy Mississippi proposes, from time to time through March 31, 2007, to enter into one or more agreements, either directly or through an affiliate (''Municipal Securities Agreements''), with one or more issuing governmental authorities (''Municipal Entities''), under which a Municipal Entity could issue securities to the public on behalf of Entergy Mississippi or loan money to Entergy Mississippi through a bank, an affiliate of Entergy Mississippi, or other person. The net proceeds from the sale of Municipal Securities would be applied to finance certain costs of Entergy Mississippi. Under any Municipal Securities Agreement, Entergy Mississippi would be obligated to make payments sufficient to provide for payment by the Municipal Entity of the principal or redemption price of, premium, if any, and interest on, and other amounts owing with respect to the Municipal Securities, together with related expenses.

The Municipal Securities of a particular series (a) would have a maturity ranging from one year to fifty years, (b) may be subject to optional and/or mandatory redemption, in whole or in part, at par or at premiums above their principal amount, (c) may be entitled to mandatory or optional sinking fund provisions, (d) may be issued at fixed or floating rules of interest, (e) may provide for reset of the coupon under a remarketing arrangement, (f) may be called from existing investors by a third party, (g) may be backed by a municipal securities insurance policy, (h) may be supported by credit support such as a bank letter of credit and reimbursement agreement, (i) may be supported by a lien subordinate to the Mortgage on certain of EMI's facilities and other assets, and (j) may be supported by the issuance and pledge of Bonds issued as collateral security for them (''Municipal Collateral Bonds''). The maturity dates, interest rates, redemption and sinking fund provisions and conversion features, if any, with respect to Municipal Securities of a particular series as well as any associated placement, underwriting or selling agent fees, commissions and discounts, if any, would be established by negotiation or competitive bidding.

Entergy Mississippi also proposes to (a) acquire the equity securities of one or more financing subsidiaries and/or special-purpose subsidiaries, organized solely to facilitate financing, (b) to guarantee the securities issued by those financing subsidiaries and/or special purpose subsidiaries, and (c) to have the financing subsidiaries and/or special purpose subsidiaries pay Entergy Mississippi, either directly or indirectly, dividends out of capital.

**Entergy Gulf States, Inc. (70–10158)**

Entergy Gulf States, Inc. (''Entergy Gulf States''), 350 Pine Street, Beaumont, Texas 77701, an electric utility subsidiary of Entergy Corporation, a registered holding company under the Act, has filed an application-declaration under sections 6(a), 7, 9(a), 10, 12(c), 12(d), 12(e), 32 and 33 of the Act and rules 42, 53, and 54 under the Act.

Entergy Gulf States seeks authorization to issue and sell, from time to time through March 31, 2007, up to $2 billion combined aggregate principal amount of (a) its first mortgage bonds (''Bonds'') including first mortgage bonds of the medium term note series (''MTNs''), (b) its preferred stock (''Preferred Stock''), (c) its preference stock (''Preference Stock''), (d) unsecured long-term indebtedness (''Long-term Debt''), and (e) directly or indirectly through one or more financing subsidiaries, other forms of preferred or equity-linked securities (''Equity Interests'').

The Bonds and MTNs (a) may be subject to optional and/or mandatory redemption, in whole or in part, at par or at premiums above their principal amount, (b) may be entitled to mandatory or optional sinking fund provisions, (c) may be issued at fixed or floating rates of interest, (d) may provide for reset of the coupon under a remarketing arrangement, (e) may be called from existing investors by a third party, (f) may be backed by a bond insurance policy and (g) would have a maturity ranging from one year to fifty years. The maturity dates, interest rates, redemption and sinking fund provisions and conversion features, if any, of the Bonds of a particular series, as well as any associated placement, underwriting or selling fees, commissions and discounts, would be established by negotiation or competitive bidding. The maturity dates, interest rates, redemption and sinking fund provisions and conversion features, if any, of Bonds of a particular series, or MTNs of a particular sub-series, as well as any associated placement, underwriting or selling agent fees, commissions and discounts, would be established by negotiation or competitive bidding.

The Preferred Stock or Equity Interests may be issued in one or more series with whatever rights, preferences and priorities, including those related to redemption, are designated in the instrument creating each series. The Preferred Stock or Equity Interests may be redeemable or may be perpetual.

The Long-term Debt (a) would be unsecured, (b) may be convertible into any other securities of Entergy Gulf States (except common stock), (c) would have a maturity ranging from one year to fifty years, (d) may be subject to optional and/or mandatory redemption, in whole or in part, at par or at premiums above its principal amount, (e) may be entitled to mandatory or optional sinking fund provisions, (f) may be issued at fixed or floating rates of interest, (g) may provide for reset of the coupon under a remarketing arrangement, and (h) may be called from existing investors by a third party. The maturity dates, interest rates, redemption and sinking fund provisions and conversion features, if any, with respect to Long-term Debt of a particular series, as well as any associated placement, underwriting or selling agent fees, commissions and discounts, would be established by negotiation or competitive bidding.

Entergy Gulf States proposes to use the net proceeds from the issuance and sale of Bonds, and/or MTNs and/or the Preferred Stock and/or the Preference Stock and/or the Long-term Debt and/or the Equity Interests for general corporate purposes, including (a) financing its capital expenditures, (b) repaying, redeeming, refunding or purchasing any of its securities under rule 42 and/or those issued on Entergy Gulf States' behalf under section 9(c)(1), and (c) financing its working capital requirements.

Entergy Gulf States states that it contemplates selling the Bonds and/or MTNs and/or the Preferred Stock and/or the Preference Stock and/or the Long-term Debt and/or the Equity Interests by competitive bidding, negotiated public offering or private placement.

Entergy Gulf States also proposes to enter into arrangements to finance or refinance on a tax-exempt basis certain facilities eligible to be financed with tax-exempt debt, including, but not limited to, sewage and/or solid waste disposal facilities (''Facilities''). Entergy Gulf States proposes, from time to time through March 31, 2007, to enter into one or more leases, subleases, installment sale agreements, refunding agreements or other agreements (''Agreements'') and/or supplements and/or amendments to those Agreements (''Facilities Agreements'') with one or more issuing governmental authorities (''Authorities''), under which the Authorities may issue one or more series of tax-exempt bonds (''Tax-exempt Bonds'') in an aggregate principal amount up to $500 million (including the possible issuance and pledge by Entergy Gulf States of up to $560 million in aggregate principal amount of Entergy Gulf States Collateral Securities (as defined below), which $560 million is not included in the $2 billion mentioned above). The net proceeds from the sale of Tax-exempt Bonds would be applied to financing, or refinancing tax-exempt bonds issued for the purpose of financing, the Facilities.

Under the terms of the Facilities Agreements, Entergy Gulf States may commit to purchase, acquire, construct, install, operate and/or maintain the Facilities. Under the Facilities Agreements, Entergy Gulf States would be obligated to make payments sufficient to pay the principal or redemption price of, premium, if any, and the interest on, and other amounts owing with respect to, the Tax-exempt Bonds, together with related expenses.

The Tax-exempt Bonds (a) would have a maturity ranging from one year to fifty years, (b) may be subject to optional and/or mandatory redemption, in whole or in part, at par or at premiums above their principal amount, (c) may be entitled to mandatory or optional sinking fund provisions, (d) may be issued at fixed or floating rates of interest, (e) may provide for reset of the coupon under a remarketing arrangement, (f) may be called from existing investors by a third party, (g) may be backed by a municipal bond insurance policy, (h) may be supported by credit support such as a bank letter of credit and reimbursement agreement, (i) may be supported by a lien subordinate to Entergy Gulf States' Indenture of Mortgage (as before and later amended and supplemented) on the Facilities related to those Tax-exempt Bonds and (j) may be supported by the issuance and pledge of Bonds issued as collateral security for those Tax-exempt Bonds (''Collateral Securities''). The maturity dates, interest rates, redemption and sinking fund provisions and conversion features, if any, with respect to Tax-exempt Bonds of a particular series, as well as any associated placement, underwriting or selling agent fees, commissions and discounts, would be established by negotiation or competitive bidding.

Entergy Gulf States also proposes to (a) acquire the equity securities of one or more financing subsidiaries and/or special-purpose subsidiaries, organized solely to facilitate financing, (b) to guarantee the securities issued by those financing subsidiaries and/or special purpose subsidiaries, and (c) to have the financing subsidiaries and/or special purpose subsidiaries pay Entergy Gulf States, either directly or indirectly, dividends out of capital.

**Ameren Corporation, et al. (70–10159)**

Ameren Corporation (''Ameren''), a registered holding company, Ameren Energy, Inc., and Ameren's nonutility subsidiaries Ameren Development Company (''Ameren Development''), Ameren ERC, Inc. (''Ameren ERC''), Ameren Energy Resources Company (''Ameren Energy Resources''), Ameren Energy Marketing Company, Ameren Energy Fuels and Services Company, Illinois Materials Supply Co., Missouri Central Railroad Company, Union Electric Development Company (''UEDC''), AFS Development Company, LLC, all located at 1901 Chouteau Avenue, St. Louis, Missouri 63103, and nonutility subsidiaries CIPSCO Investment Company (''CIC''), 607 East Adams Street, Springfield, Illinois 62739, CILCORP Investment Management Inc., CILCORP Ventures Inc., CILCORP Energy Services, Inc., QST Enterprises Inc., CILCO Exploration and Development Company, and CILCO Energy Corporation, all located at 300 Liberty Street, Peoria, Illinois 61602, and nonutility subsidiaries AmerenEnergy Medina Valley Cogen (No. 4), L.L.C., AmerenEnergy Medina Valley Cogen (No. 2) L.L.C., AmerenEnergy Medina Valley Cogen, L.L.C., an exempt wholesale generator (''EWG'') and AmerenEnergy Medina Valley Operations, L.L.C., a nonutility subsidiary all at P.O. Box 230, Mossville, Illinois, 61552–0230 (collectively, ''Applicants'' and excluding Ameren ''Nonutility Subsidiaries'') have filed an application-declaration (''Application'') under sections 6(a), 7, 9(a), 10, 12(b), 12(c) and 13(b) of the Act and rules 43, 45, 46, 90 and 91 under the Act.

By order dated July 23, 1999 (the ''1999 Order''),[5] Ameren, Ameren Union Electric Company d/b/a AmerenUE, and certain direct and indirect non-utility subsidiaries of Ameren were authorized to engage in various transactions from time to time through December 31, 2003, relating generally to Ameren's reorganization of its nonutility subsidiary companies and the acquisition and ownership of new non-utility subsidiaries.

In this Application, the Applicants are seeking to extend and restate their current authorization under the 1999 Order for the period through December 31, 2006 (the ''Authorization Period''), subject to a continuation of the Commission's reservation of jurisdiction over certain specified proposals, as described below.

[5] Holding Co. Act Release No. 27053.

**I. Intermediate Subsidiaries**

Ameren proposes to acquire, directly or indirectly through the Nonutility Subsidiaries, the securities of one or more new subsidiaries (''Intermediate Subsidiaries'') organized exclusively for the purpose of acquiring, holding and/or financing the acquisition of the securities of or other interest in EWGs, foreign utility companies (''FUCOs''), exempt telecommunications companies'' (''ETCs'') under section 34 of the Act, energy-related companies'' under rule 58 (''Rule 58 Subsidiaries'') or other non utility companies the acquisition of which has been expressly authorized by the Commission. Applicants state that the Intermediate Subsidiaries would be organized exclusively for the purpose of acquiring, holding and/or financing the acquisition of the securities of or other interest in one or more of EWGs, FUCOs, ETCs under section 34 of the Act, (collectively, ''Exempt Subsidiaries''), Rule 58 Subsidiaries, or other current or future non-exempt subsidiaries that have been authorized by the Commission (''Non-Exempt Subsidiaries''), provided that Intermediate Subsidiaries may also engage in Development Activities [6] and Administrative Activities [7] relating to such subsidiaries.

**II. Financing Subsidiaries**

Applicants request authority to acquire, directly or indirectly, the equity securities of one or more new subsidiaries (''Financing Subsidiaries'') organized exclusively for the purpose of issuing long-term debt or equity securities to investors other than Ameren in order to finance, in whole or in part, Ameren's direct or indirect acquisition of Exempt Subsidiaries and Rule 58 Subsidiaries created specifically for the purpose of facilitating the financing of the Applicants' authorized and exempt activities (including exempt and authorized acquisitions) through the issuance of long-term debt or equity securities to third parties and the transfer of the proceeds of such financings to the parent company of the Financing Subsidiary.

The amount and terms (*i.e.*, interest rate, maturity, etc.) of any long-term debt or preferred equity securities issued by a Financing Subsidiary of Ameren will count against the limitation and comply with the specific terms applicable to that type of security under the any applicable order approving financing by Ameren. Ameren also proposes, if required, to guarantee or enter into expense agreements in respect of the obligations of any such Financing Subsidiaries. To avoid double counting, however, the guarantee of that security by Ameren would not also be counted against the then current limit on guarantees that Ameren is authorized to issue under any applicable order. Nonutility Subsidiaries may also provide guarantees and enter into expense agreements, if required, on behalf of such entities pursuant to rules 45(b)(7) and 52, as applicable. Ameren further requests authorization to issue its unsecured subordinated promissory notes (''Subordinated Notes'') to any Financing Subsidiary to evidence a loan of the proceeds of any financing by a Financing Subsidiary to Ameren. The amount and terms (*i.e.*, interest rate, maturity, default provisions, prepayment terms, etc.) of any Subordinated Notes issued by Ameren to a Financing Subsidiary will be designed to parallel the amount and terms of the specific securities of a Financing Subsidiary in respect of which such Subordinated Notes are issued. Again, to avoid double counting, the amount of Subordinated Notes issued by Ameren to any Financing Subsidiary will not be counted against the then applicable limit on long-term debt and preferred equity securities that Ameren is authorized to issue.

**III. Special Purpose Subsidiaries**

Ameren requests authority to acquire, directly or indirectly through a Nonutility Subsidiary, the equity securities of one or more new subsidiaries (''Special Purpose Subsidiaries'') organized to purchase or otherwise acquire any of the assets of or securities held by UEDC and/or CIC at the time Ameren became a registered holding company, and UEDC and CIC request authorization to sell or otherwise transfer such assets or securities to Special Purpose Subsidiaries. In addition, Special Purpose Subsidiaries may also be formed to engage in any of the following additional business activities:

(i) Making or guaranteeing loans to customers to finance the purchase of home and business heating, ventilation and cooling equipment; energy conservation and management equipment, products and services; lighting equipment and supplies; and home and business security systems. Ameren proposes that the aggregate principal amount of loans, guarantees or customer installment obligations with respect to which there is recourse to any Special Purpose Subsidiary shall not exceed $300 million at any one time during the Authorization Period.

(ii) Development Activities and operations and maintenance, construction and construction management, fuel procurement and other types of services for or on behalf of any Nonutility Subsidiary. The Applicants are requesting a continuation of their current authority to expend up to $250 million in the aggregate outstanding at any time during the Authorization Period on all Development Activities.

(iii) The marketing of energy bill payment insurance in Illinois and Missouri, which would enable utility customers to pay their energy bills in the event of unemployment, illness, disability or death. This program would be underwritten and administered by an independent insurance company or companies.

(iv) The offering of economic development services for businesses wishing to expand or relocate their facilities to anywhere within the wholesale or retail service area of the Union Electric Company d/b/a AmerenUE (''AmerenUE''), Central Illinois Public Service Company d/b/a AmerenCIPS (''AmerenCIPS''), and Central Illinois Light Company, d/b/a AmerenCILCO (''AmerenCILCO,'' and together with AmerenUE and AmerenCIPS, the ''Utility Subsidiaries''), including consultation with local economic development officials, building and site screening, customized tax comparison studies and workforce analyses, liaison services to identify financing and leasing sources for building construction, equipment and working capital, and other similar services. These services will be similar in scope to those which the Utility Subsidiaries have in the past provided to relocating businesses, often without charge. Ameren states that minimal capital will be required to provide these types of services and that, without further order of the Commission, it will not acquire any securities of or other interest in any industrial/commercial

[6] Development Activities are limited to due diligence and design review; market studies; preliminary engineering; site inspection; preparation of bid proposals, including, in connection therewith, posting of bid bonds; application for required permits and/or regulatory approvals; acquisition of site options and options on other necessary rights; negotiation and execution of contractual commitments with owners of existing facilities, equipment vendors, construction firms, power purchasers, thermal ''hosts,'' fuel suppliers and other project contractors; negotiation of financing commitments with lenders and other third-party investors; and such other preliminary activities as may be required in connection with the purchase, acquisition or construction of facilities or the securities of other companies.

[7] Administrative Activities include ongoing personnel, accounting, engineering, legal, financial, and other support activities necessary to manage Development Activities and investments in non-utility subsidiaries.

development enterprise except as may be permitted by rule 40(a)(5).

(v) The offering of customer goodwill or retention programs, such as packaged discounts on products for the home, travel, and health services, prepaid phone cards or ''affinity'' cards to promote customer goodwill, and programs to help customers stay informed and protect their credit rating, driving record, and social security number.

(vi) The marketing of ''outage'' insurance, which would enable customers to protect against lost revenues due to power interruptions, and surge protection service. Ameren requests authorization to invest in Special Purpose Subsidiaries an aggregate amount at any time outstanding not to exceed $250 million.

**IV. Guarantees by Nonutility Subsidiaries**

Nonutility Subsidiaries request authorization to provide guarantees or other forms of credit support in respect of obligations of each other in an aggregate principal amount at any time outstanding during the Authorization Period not to exceed $300 million, in addition to any guarantees that are exempt under rules 45(b) and 52(b), as applicable, provided that any guaranty or other form of credit support outstanding on December 31, 2006, shall remain in effect until it expires in accordance with its terms.

**V. Sales of Services and Goods Among Nonutility Subsidiaries**

Nonutility Subsidiaries request authorization to provide services or sell goods to each other at fair market prices determined without regard to cost, and therefore request an exemption pursuant to section 13(b) from the cost standard of rules 90 and 91 as applicable to such transactions, in any case in which any of the following circumstances may apply:

(i) The client company is a FUCO or foreign EWG that derives no part of its income, directly or indirectly, from the generation, transmission, or distribution of electric energy for sale within the United States;

(ii) The client company is an EWG that sells electricity at market-based rates which have been approved by the Federal Energy Regulatory Commission (''FERC''), provided that the purchaser thereof is not a Utility Subsidiary;

(iii) The client company is a ''qualifying facility'' (''QF'') within the meaning of the Public Utility Regulatory Policies Act of 1978, as amended (''PURPA'') that sells electricity exclusively (a) at rates negotiated at arms'-length to one or more industrial or commercial customers purchasing the electricity for their own use and not for resale, and/or (ii) to an electric utility company (other than a Utility Subsidiary) at the purchaser's ''avoided cost'' as determined in accordance with the regulations under PURPA;

(iv) The client company is a domestic EWG or QF that sells electricity at rates based upon its cost of service, as approved by FERC or any state public utility commission having jurisdiction, provided that the purchaser thereof is not a Utility Subsidiary; or

(v) The client company is a Rule 58 Subsidiary or any other Nonutility Subsidiary that (1) is partially-owned, provided that the ultimate purchaser of such goods or services is not a Utility Subsidiary or Ameren Services Company (''Ameren Services''), a service company subsidiary, (or any other entity within the Ameren system whose activities and operations are primarily related to the provision of goods and services to the Utility Subsidiaries, (2) is engaged solely in the business of developing, owning, operating and/or providing services or goods to Nonutility Subsidiaries described in paragraphs (i) through (iv) immediately above, or (3) does not derive, directly or indirectly, any material part of its income from sources within the United States and is not a public utility company operating within the United States.

**VI. Sale of Certain Goods and Services by Rule 58 Subsidiaries and Special Purpose Subsidiaries Outside the United States**

Rule 58 Subsidiaries and Special Purpose Subsidiaries request authority to sell goods and services to customers both within and outside the United States. These goods and services include:

(i) The brokering and marketing of electricity, natural gas and other energy commodities;

(ii) Energy Management Services, which include the marketing, sale, installation, operation and maintenance of various products and services related to energy management and demand-side management, including energy and efficiency audits; facility design and process control and enhancements; construction, installation, testing, sales and maintenance of (and training client personnel to operate) energy conservation equipment; design, implementation, monitoring and evaluation of energy conservation programs; development and review of architectural, structural and engineering drawings for energy efficiencies, design and specification of energy consuming equipment; and general advice on programs; the design, construction, installation, testing, sales and maintenance of new and retrofit heating, ventilating, and air conditioning (''HVAC''), electrical and power systems, alarm and warning systems, motors, pumps, lighting, water, water-purification and plumbing systems, and related structures, in connection with energy-related needs; and the provision of services and products designed to prevent, control, or mitigate adverse effects of power disturbances on a customer's electrical systems;

(iii) Performance contracting services aimed at assisting customers in realizing energy and other resource efficiency goals in the areas of process control, fuel management, and asset management services (including operation and maintenance services) in respect of energy-related systems, facilities and equipment located on or adjacent to the premises of a customer and used by that customer in connection with business activities, including: (a) Distribution systems and substations, (b) transmission, storage and peak-shaving facilities, (c) gas supply and/or electrical generation facilities (*i.e.*, stand-by generators and self-generation facilities), (d) boilers and chillers, (e) alarm/warning systems, (f) HVAC, water and lighting systems, and (g) environmental compliance, energy supply and building automation systems and controls;

(iv) Technical Support Services, which include technology assessments, power factor correction and harmonics mitigation analysis, meter reading and repair, rate schedule design and analysis, environmental services, engineering services, billing services (including consolidation billing and bill disaggregation tools), risk management services, communications systems, information systems/data processing, system planning, strategic planning, finance, feasibility studies, and other similar services;

(v) Certain retail services, including the provision of centralized bill payment centers for payment of all utility and municipal bills and related services; annual inspection, maintenance and replacement of energy-related equipment and appliances; service line repair and extended warranties with respect to all of the utility- or energy-related service lines internal and external to a customer's premises; provision of surge protection equipment and services; marketing services to associate and nonassociate businesses in the form of bill insert; and automated meter-reading services;

(vi) Sale of monitoring and response goods and services, which include products used in connection with energy and gas-related activities that enhance safety, increase energy/process efficiency; sale of energy-related information, as well as repair services, in connection with such problems as carbon monoxide leaks and faulty equipment wiring; operation of call/dispatch centers on behalf of associate and nonassociate companies in connection with the proposed sale of goods and services or with activities that Nonutility Subsidiaries are otherwise authorized to engage in under the Act;

(vii) Sale of energy-peaking services via propane-air or liquefied natural gas (''LNG''), which involves the provision of back-up electricity or gas supply in periods of high or ''peak'' energy demand using a propane-air mixture or LNG as fuel sources for such back-up services; and

(viii) Project development and ownership activities, which involves the installation and ownership of gas-fired turbines for on-site generation and consumption of electricity.

In addition, Nonutility Subsidiaries request authorization to provide other energy-related goods and services that may not be permitted under Rule 58. These include incidental goods and services closely related to the consumption of energy and the maintenance of energy consuming property by customers, provided that the proposed incidental goods and services would not involve the manufacture of energy consuming equipment but could be related to, among other things, the maintenance, financing, sale or installation of such equipment.

The Applicants request that the Commission (1) authorize electricity and energy commodity brokering and marketing activities in Canada and reserve jurisdiction over such activities outside the United States and Canada pending completion of the record in this proceeding, (2) authorize the proposed sale of Energy Management Services and Technical Support Services and related customer financing anywhere outside the United States, and (3) continue to reserve jurisdiction over sale of the remaining goods and services described above outside the United States, pending completion of the record.

**VII. Sale of Agency Services by Ameren Energy and AE Marketing to Utility Subsidiaries**

Ameren Energy requests authorization to continue to act as agent for AmerenUE in connection with the brokering and marketing of electricity and other energy commodities by AmerenUE. Such services include negotiation and administration of power sales agreements with third parties and negotiation of associated credit support and risk management documents. Ameren Energy will provide agency and any other incidental services at cost, determined in accordance with rules 90 and 91. Ameren Energy Marketing Company (''AE Marketing''), an ''energy-related company'' under rule 58, requests authorization to provide similar agency services to AmerenEnergy Resources Generating Company (f/k/a Central Illinois Generation, Inc.) (''AERG''), in connection with brokering and marketing of electricity produced by AERG.

**VIII. Investments in Energy Assets**

Ameren, indirectly through one or more Nonutility Subsidiaries (including any Rule 58 Subsidiary), requests authorization to acquire or construct nonutility energy assets in the United States, including, without limitation, natural gas production, gathering, processing, storage and transportation facilities and equipment, liquid oil reserves and storage facilities, and associated facilities (collectively, ''Energy Assets''), that would be incidental or functionally related to energy marketing, brokering and trading. Ameren requests authorization to invest up to $400 million at any one time during the Authorization Period (the ''Investment Limitation'') in Energy Assets or in the equity securities of existing or new companies substantially all of whose physical properties consist or will consist of Energy Assets. Such Energy Assets (or equity securities of companies owning Energy Assets) may be acquired for cash or in exchange for common stock or other securities of Ameren or any Nonutility Subsidiary. If common stock of Ameren is used as consideration in connection with any such acquisition, the market value of the stock on the date of issuance will be counted against the proposed Investment Limitation. The stated amount or principal amount of any other securities issued as consideration in any such transaction will also be counted against the Investment Limitation. Under no circumstances will Ameren Energy or any marketing subsidiary acquire, directly or indirectly, any assets or properties the ownership or operation of which would cause such companies to be considered an ''electric utility company'' or ''gas utility company'' as defined under the Act.

**IX. Payment of Dividends Out of Capital and Unearned Surplus**

Ameren, on behalf of its direct or indirect Nonutility Subsidiaries, requests that these Nonutility Subsidiaries be permitted to pay dividends with respect to the securities of these Nonutility Subsidiaries and/or reacquire their securities that are held by any associate company, from time to time through the Authorization Period, out of capital and unearned surplus (including revaluation reserve), to the extent permitted under applicable corporate law, provided that, without further approval of the Commission, no Nonutility Subsidiary will declare or pay any dividend out of capital or unearned surplus if that Nonutility Subsidiary derives any material part of its revenues from sales of goods, services, electricity or natural gas to any of the Utility Subsidiaries or if, at the time of such declaration or payment, such Nonutility Subsidiary has negative retained earnings.

**X. Anticipatory Interest Rate Hedges by Nonutility Subsidiaries**

Nonutility Subsidiaries request authorization to enter into interest rate hedging transactions with respect to anticipated debt offerings (''Anticipatory Hedges''), subject to certain limitations and restrictions. These Anticipatory Hedges would only be entered into with counterparties whose senior debt ratings, or the senior debt ratings of the parent companies of the counterparties, as published by Standard and Poor's Ratings Group, are equal to or greater than BBB, or an equivalent rating from Moody's Investors Service, Fitch Investor Service or Duff and Phelps.

**XI. Changes in Capitalization of Non-Utility Subsidiaries; Subsequent Internal Reorganizations of Non-Utility Subsidiaries**

Applicants request authorization to change the terms of any Nonutility Subsidiary's authorized capitalization by an amount deemed appropriate by Ameren or other parent company, provided that, if a Nonutility Subsidiary is not wholly owned, the consent of all other shareholders has been obtained for such change. Thus, a Nonutility Subsidiary would be able to increase the number of its authorized shares of capital stock, change the par value of its capital stock, change between par value and no-par value stock, or convert from one form of business organization to another without additional Commission approval.

In addition, to the extent that such transactions are not otherwise exempt under the Act or rules under the Act, Ameren requests approval to consolidate, sell, transfer or otherwise reorganize all or any part of its direct and indirect ownership interests in Nonutility Subsidiaries, as well as investment interests in entities that are not subsidiary companies. To effect any such consolidation or other reorganization, Ameren may wish to either contribute the equity securities of one Nonutility Subsidiary to another Nonutility Subsidiary (including a newly formed Intermediate Subsidiary) or sell (or cause a Nonutility Subsidiary to sell) the equity securities or all or part of the assets of one Nonutility Subsidiary to another one. Such transactions may also take the form of a Nonutility Subsidiary selling or transferring the equity securities of a subsidiary or all or part of such subsidiary's assets as a dividend to an Intermediate Subsidiary or to another Nonutility Subsidiary, and the acquisition, directly or indirectly, of the equity securities or assets of such subsidiary, either by purchase or by receipt of a dividend. The purchasing Nonutility Subsidiary in any transaction structured as an intrasystem sale of equity securities or assets may execute and deliver its promissory note evidencing all or a portion of the consideration given. Ameren may also liquidate or merge Nonutility Subsidiaries.

**Ohio Valley Electric Corporation (70–10160)**

Ohio Valley Electric Corporation (''OVEC''), 3932 U.S. Route 23, P.O. Box 468, Piketon, Ohio 45661, an electric public utility subsidiary of American Electric Power Company, Inc. (''AEP''), Allegheny Energy, Inc. (''Allegheny''), and FirstEnergy Corporation (''FirstEnergy''), each a registered public utility holding company under the Act, has filed a declaration (''Declaration'') under sections 6 and 7 of the Act and rule 54 under the Act.

By order dated December 6, 1999 (Holding Company Act Release No. 35–27109) OVEC was authorized to incur short-term indebtedness through the issuance and sale of notes to banks or other financial institutions in an aggregate principal amount not to exceed $100 million outstanding at any one time, from time-to-time, through December 31, 2003, provided that no note would mature later than June 30, 2004.

OVEC requests authorization to incur short-term indebtedness through the issuance and sale of notes (''Notes'') to banks or other financial institutions in an aggregate principal amount not to exceed $200 million outstanding at any one time, from time-to-time, through December 31, 2006, provided that no note shall mature later than June 30, 2007. OVEC requests that the Commission reserve jurisdiction over the issuance of $100 million principal amount of Notes, out of the $200 million principal amount of debt authority requested, until completion of the record.

OVEC and its wholly-owned subsidiary, Indiana-Kentucky Electric Company, own two generating stations located in Ohio and Indiana with a combined electric production capability of approximately 2,256 megawatts. OVEC is owned by AEP, Allegheny, FirstEnergy and other utilities.[8] AEP owns directly and indirectly 44.2% of OVEC, of which 4.35% is owned by its subsidiary Columbus Southern Power Company. FirstEnergy owns indirectly 20.5% of OVEC through its subsidiaries Ohio Edison Company (16.5%) and The Toledo Edison Company (4.0%). Allegheny owns directly 12.5% of OVEC. The owners, or their affiliates, purchase power from OVEC according to the terms of an inter-company power agreement.

The operation of OVEC's generating stations requires the storage of substantial quantities of coal to ensure the availability of power to pay its customers. OVEC has used short term debt to finance the coal inventory at its plants, to purchase SO2 allowances, to purchase material supplies and inventory, to provide interim financing of capital improvements pending the issuance of long-term debt, and for cash management to pay general obligations. The proceeds of the short-term debt incurred by OVEC will be used to pay for these and other general obligations and for other corporate purposes.

The Notes will mature not more than 365/366 days after the date of issuance or renewal, provided that no Note will mature later than June 30, 2007. Notes will be offered at terms consistent with those of similar companies and will bear interest at an annual rate not greater than the prime commercial rate of Citibank, N.A. (or any successor) in effect from time-to-time. Any credit arrangements may require payment of a fee that is not greater than ½ of 1% of the size of the line of credit made available by the bank and the maintenance of additional balances of not greater than 20% of the line of credit. Any other line of credit fees will be consistent with fees paid for like transactions. The maximum effective annual interest cost under the above arrangements, assuming full use of the line of credit, will not exceed 125% of the prime commercial rate in effect from time to time or not more than 7.5% on the basis of a prime commercial rate of 6%.

**NiSource, Inc., et al. (70–10169)**

NiSource Inc. (''NiSource''), a registered public-utility holding company, Northern Indiana Public Service Company (''Northern Indiana''), Kokomo Gas and Fuel Company (''Kokomo'') and its subsidiary, Northern Indiana Fuel and Light Company, Inc. (''NIFL''), all public-utility company subsidiaries of NiSource, and its subsidiary, EnergyUSA, Inc., and its subsidiaries, PEI Holdings, Inc. (f/k/a Primary Energy, Inc.), NiSource Capital Markets, Inc. (''Capital Markets''), NiSource Corporate Services Company (''NiSource Services''), a subsidiary service company, NiSource Finance Corp. (''NiSource Finance''), Granite State Transmission, Inc., Crossroads Pipeline Company, NiSource Development Company, Inc., and its subsidiaries, NI Energy Services, Inc., and its subsidiaries, NiSource Energy Technologies, Inc., IWC Resources Corporation and its subsidiaries; Columbia Energy Group (''Columbia''), a registered public-utility holding company, Columbia Atlantic Trading Corporation, Columbia Deep Water Services Company, Columbia Energy Services Corporation and Columbia Remainder Corporation and its subsidiary, all located at 801 East 86th Avenue, Merrillville, Indiana 46410–6272; Bay State Gas Company (''Bay State''), Northern Utilities, Inc. (''Northern Utilities''), both gas utility companies, and Bay State GPE, Inc., located at 300 Friberg Parkway, Westborough, Massachusetts 01581–5039; Columbia Gas of Kentucky, Inc. (''Columbia Kentucky''), Columbia Gas of Maryland, Inc. (''Columbia Maryland''), Columbia Gas of Ohio, Inc. (''Columbia Ohio''), Columbia Gas of Pennsylvania, Inc. (''Columbia Pennsylvania''), Columbia Gas of Virginia, Inc. (''Columbia Virginia''), all gas utility companies, and Columbia Accounts Receivable Corporation, 200 Civic Center Drive, Columbus, Ohio

[8] The other utilities that own OVEC are: The Cincinnati Gas & Electric Company (9.0%), a subsidiary of Cinergy Corp.; Louisville Gas and Electric Company (4.9%) and Kentucky Utilities Company (2.5%), both subsidiaries of E.ON AG; The Dayton Power and Light Company (4.9%), a subsidiary of DPL Inc.; and Southern Indiana Gas and Electric Company (1.5%), a subsidiary of Vectren Corp. Both Cinergy and E.ON AG are registered public utility holding companies under the Act.

43215; Columbia Gas Transmission Corporation, located at 12801 Fair Lakes Parkway, Fairfax, Virginia 22030–0146; Columbia Gulf Transmission Company, located at 2603 Augusta, Suite 125, Houston, Texas 77057; Columbia Network Services Corporation and its subsidiary, both located at 1600 Dublin Road, Columbus, Ohio 43215–1082; and NiSource Insurance Corporation Limited (f/k/a Columbia Insurance Corporation, Ltd.), located at 20 Parliament Street, P.O. Box HM 649, Hamilton HM CX, Bermuda (collectively ''Applicants''), have filed an application-declaration, as amended (''Application''), under sections 6(a), 7, 9(a), 10, 12(b), (c) and (f) and 13(b) and rules 26(c), 45(a) and (c) and 46. NiSource and its direct and indirect public-utility and nonutility subsidiary companies are seeking to extend, restate and modify their current authorizations under various orders to engage in external and intrasystem financing and related transactions (''Current Orders'')[9] during the period through December 31, 2006 (''Authorization Period'') and replace and supersede the Current Orders.

## I. Background

NiSource and its wholly owned subsidiary, Columbia, also a registered public-utility holding company, own ten public-utility company subsidiaries: Northern Indiana, Kokomo and NIFL, Bay State,[10] Northern Utilities, Columbia Kentucky, Columbia Maryland, Columbia Ohio, Columbia Pennsylvania and Columbia Virginia (collectively ''Utility Subsidiaries''). Together, the Utility Subsidiaries distribute gas at retail in portions of Indiana, Ohio, Virginia, Maryland, Kentucky, Pennsylvania, Massachusetts, New Hampshire and Maine. Northern Indiana also generates, transmits and sells electricity in 21 counties in the northern part of Indiana.

NiSource also holds, directly or indirectly, numerous nonutility subsidiaries and investments. Its principal nonutility subsidiaries are: NiSource Services, a subsidiary service company; Columbia Gas Transmission Corporation, Columbia Gulf Transmission Company, Granite State Transmission, Inc., and Crossroads Pipeline Company, all of which are engaged in interstate natural gas transportation and storage; PEI Holdings (f/k/a Primary Energy, Inc.), an intermediate subsidiary that owns all of the outstanding common stock of Whiting Clean Energy, Inc., an ''exempt wholesale generator'' (''EWG'') under section 32 of the Act; EnergyUSA, Inc., which serves as the holding company for subsidiaries that are engaged in energy marketing and in providing energy management services; NiSource Development Company, Inc., which holds passive investments in affordable housing projects that qualify for federal income tax credits and in other real estate ventures that are intended to complement NiSource's energy businesses; and NiSource Insurance Corporation Limited, a captive insurance subsidiary. NiSource also owns IWC Resources Corporation, which was previously the holding company for several water distribution companies;[11] and two special purpose financing subsidiaries, NiSource Finance and Capital Markets, through which NiSource issues long-term and short-term debt securities. The term ''Nonutility Subsidiaries'' shall mean each of the direct and indirect nonutility subsidiaries of NiSource (other than Columbia). The term ''Nonutility Subsidiaries'' also includes any direct or indirect nonutility subsidiary acquired or formed, directly or indirectly, by NiSource after the effective date of the order in this proceeding pursuant to the authorization of the Commission (including the authorizations requested in the Application) or in a transaction that is exempt under the Act (specifically, sections 32, 33 and 34) or the rules (including, specifically, rule 58). The term ''Subsidiaries'' means the Utility Subsidiaries and the Nonutility Subsidiaries. NiSource, Columbia and the Subsidiaries are sometimes collectively referred to as ''Applicants.''

NiSource and Columbia and their respective subsidiaries are authorized to engage in a program of external and intrasystem financing, to issue guarantees and other forms of credit support, to organize and acquire the securities of specified types of new subsidiaries, to pay dividends out of capital and unearned surplus, to reorganize and recapitalize subsidiaries and to engage in other related transactions through December 31, 2003. *See* the Current Orders.

Applicants now request the following authorizations through the Authorization Period:

1. For NiSource to increase its capitalization by issuing and selling, through one or more financing subsidiaries: (i) additional shares of common stock or other rights that are exercisable or exchangeable for or convertible into common stock, (ii) preferred securities (including trust preferred securities) (together ''Preferred Securities'') and equity-linked securities (''Equity-linked Securities''), and (iii) unsecured long-term debt securities (''Long-term Debt'') and unsecured short-term indebtedness (''Short-term Debt'');

2. For Columbia to increase its capitalization by issuing additional shares and/or Long-term Debt to NiSource or a financing subsidiary (''Financing Subsidiary''), as further defined below in section VII (Financing Subsidiaries), of NiSource or to third party lenders;

3. For Columbia Maryland to issue and sell, and Columbia to acquire, additional shares of Columbia Maryland's common stock and unsecured and secured Long-term Debt;

4. For NiSource, through Nonutility Subsidiaries, to make loans to less than wholly owned subsidiaries at interest rates and maturities designed to provide a return of not less than its effective cost of capital, in the circumstance where the borrowing Nonutility Subsidiary is not wholly owned by NiSource;

5. To continue the Money Pool and to permit additional Nonutility Subsidiaries to participate, as investors only, without further Commission approval;

6. For NiSource, directly or through Financing Subsidiaries, and Columbia to guarantee indebtedness or contractual obligations or provide other forms of credit support (''Parent Guarantees'') on behalf of, or for, their Subsidiaries;

7. For Nonutility Subsidiaries to provide guarantees of indebtedness or contractual obligations, or other credit support, on behalf of, or for, the other Nonutility Subsidiaries (''Nonutility Subsidiary Guarantees'');

8. For NiSource, Columbia and the Subsidiaries to enter into interest rate hedging transactions (''Interest Rate Hedges'') and or anticipatory hedging transactions (''Anticipatory Hedges'') with respect to interest rates;

[9] *See NiSource, Inc., et al.*, Holding Co. Act Release Nos. 27263 (Oct. 30, 2000 (''Merger Order'')), 27265 (Nov. 1, 2000 (November 1, 2000 Order'')), 27361 (Mar. 21, 2001) (authorizing increase in NiSource Short-term Debt from $2 billion to $3.4 billion), 27567 (Sept. 12, 2002) (authorizing tax allocation agreement), 27479 (Dec. 19, 2001), 27535 (June 3, 2000) (releasing jurisdiction over Bay State and Northern Utilities money pool participation), 27559 (Aug. 8, 2002) (releasing jurisdiction over Granite State Gas Transmission, Inc., money pool participation); *Columbia Energy Group, Inc., et al.*, Holding Co. Act Release Nos. 26634 (Dec.23, 1996), 26798 (Dec. 22, 1997), 27035 (June 8, 1999).

[10] Bay State is also a section 3(a)(2) exempt holding company. *See* SEC File No. 69–340.

[11] The principal operating assets of IWC Resources Corporation and its subsidiaries were sold in April 2002 in accordance with the Commission's divestiture order under section 11(b)(1) of the Act. *See* Merger Order.

9. For NiSource and the Subsidiaries to change the terms of the authorized capitalization of any Subsidiary;

10. For NiSource and Columbia to acquire the equity securities of one or more additional Financing Subsidiaries, to guarantee securities issued by Financing Subsidiaries and to issue unsecured subordinated notes to any Financing Subsidiary;

11. For NiSource to acquire equity securities of intermediate subsidiaries organized to acquire, finance and hold securities of existing or future Nonutility Subsidiaries, including, but not limited to, EWGs, foreign utility holding companies (''FUCOs''), exempt telecommunications companies (''ETCs'') and subsidiaries exempt under rule 58 (''Rule 58 Subsidiaries'') (all ''Intermediate Subsidiaries''), also to authorize Intermediate Subsidiaries to provide management, administrative, project development and operating services to one another, and to exempt Intermediate Subsidiaries from section 13(b) of the Act, permitting them to charge fair market rates in certain circumstances;

12. For NiSource to reorganize its Nonutility Subsidiaries and their activities and functions;

13. For Nonutility Subsidiaries (including Intermediate Subsidiaries) to expend up to $250 million on preliminary development activities relating to potential nonutility investments;

14. For Nonutility Subsidiaries to perform services and sell goods to each other at fair market prices, determined without regard to ''cost'';

15. For NiSource, on behalf of any current and future Rule 58 Subsidiaries, to engage in certain rule 58 categories of activities outside the United States and reserving jurisdiction with respect to certain jurisdictions, pending completion of the record;

16. For Columbia, and for Nonutility Subsidiaries, to pay dividends out of capital and unearned surplus and/or to reacquire shares of its common stock held by NiSource, and by any associate company, respectively; and

17. For Applicants to continue to allocate consolidated income tax liabilities in accordance with the Tax Allocation Agreement previously approved by the Commission for tax years ending during the Authorization Period.

## II. The Proposed External Financings

### *A. General Terms and Conditions*

Financing transactions with third parties will be subject to the following general terms and conditions (including, without limitation, securities issued for the purpose of refinancing or refunding outstanding securities of the issuer) (''Financing Parameters''):

*Effective Cost of Money.* The effective cost of capital on Long-term Debt, Preferred Securities, Equity-linked Securities, and Short-term Debt will not exceed competitive market rates available at the time of issuance for securities having the same or reasonably similar terms and conditions issued by similar companies of reasonably comparable credit quality. Applicants state that in no event will the effective cost of capital (i) on any series of Long-term Debt exceed 500 basis points over a U.S. Treasury security having a remaining term equal to the term of such series, (ii) on any series of Preferred Securities or Equity-linked Securities exceed 600 basis points over a U.S. Treasury security having a remaining term equal to the term of such series, and (iii) on Short-term Debt exceed 500 basis points over the London Interbank Offered Rate for maturities of less than one year.

*Maturity.* The maturity of Long-term Debt will be between one and 50 years after the issuance. Preferred Securities and Equity-linked Securities will be redeemed no later than 50 years after the issuance, unless converted into common stock, except that Preferred Stock issued directly by NiSource may be perpetual in duration.

*Issuance Expenses.* The underwriting fees, commissions or other similar remuneration paid in connection with the non-competitive issue, sale or distribution of securities will not exceed the greater of (i) 5% of the principal or total amount of the securities being issued, or (ii) issuance expenses that are generally paid at the time of the pricing for sales of the particular issuance, having the same or reasonably similar terms and conditions issued by similar companies of reasonably comparable credit quality.

*Common Equity Ratio.* At all times during the Authorization Period, NiSource, Columbia and each Utility Subsidiary will maintain common equity of at least 30% of its consolidated capitalization (common equity, preferred stock, long-term debt and short-term debt); nevertheless, NiSource and Columbia will be authorized to issue common stock (including common stock issued pursuant to stock-based plans maintained for shareholders, employees and management) to the extent authorized.

*Investment Grade Ratings.* Applicants further represent that, except for securities issued for the purpose of funding Money Pool operations, no guarantees or other securities, other than common stock, may be issued in reliance upon the authorization to be granted by the Commission, unless (i) the security to be issued, if rated, is rated investment grade; (ii) all outstanding securities of the issuer, that are rated, are rated investment grade; and (iii) all outstanding securities of the top level registered holding company, that are rated, are rated investment grade. For purposes of this provision, a security will be deemed to be rated ''investment grade'' if it is rated investment grade by at least one nationally recognized statistical rating organization, as that term is used in paragraphs (c)(2)(vi)(E), (F) and (H) of rule 15c3–1 under the Securities Exchange Act of 1934, as amended. Applicants request that the Commission reserve jurisdiction over the issuance of any such securities that are rated below investment grade. Applicants further request that the Commission reserve jurisdiction over the issuance of any guarantee or other securities at any time that the conditions set forth in clauses (i) through (iii) above are not satisfied.

### *B. NiSource External Financing*

NiSource requests authorization, through the Authorization Period, to increase its capitalization through the issuance and sale of common stock, Preferred Securities, Equity-linked Securities and/or unsecured Long-term Debt.[12] The aggregate amount of new long-term financing obtained by NiSource, during the Authorization Period, from the issuance and sale of common stock, when combined with the amount of new financing obtained from the issuance and sale of Preferred Securities, Equity-linked Securities and/or Long-term Debt, shall not exceed $6 billion. Applicant states, however, that (a) securities issued for purposes of

[12] NiSource contemplates that securities will be issued and sold directly to one or more purchasers in privately negotiated transactions or to one or more investment banking or underwriting firms or other entities who would resell such securities without registration under the Securities Act of 1933, as amended (''1933 Act'') in reliance upon one or more applicable exemptions from registration, or to the pubic, either (i) through underwriters selected by negotiation or competitive bidding or (ii) through selling agents acting either as agent or as principal for resale to the public, or (iii) through dealers.

NiSource and NiSource Finance have filed under the 1933 Act utilizing the ''shelf'' registration process, under which NiSource, directly or through NiSource Finance, may offer for sale, in one or more transactions, any combination of common stock, Preferred Stock, warrants to purchase common stock or Preferred Stock, Long-term Debt of NiSource Finance and Equity-Linked Securities in an aggregate amount up to $2,807,500,000. The prospectus contained in the Registration Statement provides a general description of the securities NiSource may offer.

refunding or replacing other outstanding long-term securities, where NiSource's capitalization is not increased as a result, and (b) any shares of Preferred Stock issued under the NiSource Shareholder Agreement (''Rights Plan'')[13] shall not be counted against this limitation.

NiSource also requests authority to issue and sell, directly or indirectly, through one or more Financing Subsidiaries, Short-term Debt in an aggregate principal amount at any time outstanding not to exceed $2.5 billion. All securities issued by NiSource under this authorization, including, without limitation, securities issued for the purpose of refunding or retiring outstanding securities, will comply with the Financing Parameters described above.

*C. Financing by Columbia*

To provide capital to its subsidiaries, as well as to retire and/or prepay its outstanding long-term indebtedness, Columbia requests authorization to issue (1) additional shares of its common stock directly to NiSource and (2) unsecured notes evidencing long-term borrowings from NiSource Finance or another Financing Subsidiary of NiSource and/or unaffiliated third party lenders in an aggregate amount not to exceed $3 billion (excluding securities issued for purposes of refunding or replacing other outstanding securities of Columbia where Columbia's capitalization is not increased as a result).[14] The interest rate and maturity of any series of Long-term Debt issued by Columbia to NiSource Finance or another Financing Subsidiary of NiSource will parallel the effective cost of funds of Long-term Debt recently issued by NiSource Finance or any other Financing Subsidiary of NiSource. Applicants state further that, in the event no Long-term Debt was issued during the previous calendar quarter, then the interest rate and maturity of any series of Long-term Debt issued by Columbia to NiSource Finance, or another Financing Subsidiary of NiSource, will be either the estimated new long-term rate that would be in effect if NiSource Finance, or another Financing Subsidiary of NiSource, were to issue Long-term Debt, as projected by a major investment bank, or the prevailing market rate for a newly issued BBB-rated utility bond. Long-term Debt of any series of Columbia issued to an unaffiliated third party lender will comply with the Financing Parameters.

*D. Utility Subsidiary Financing*

Columbia Maryland requests authorization to issue and sell, and Columbia requests authorization to acquire, additional shares of Columbia Maryland's common stock and Long-term Debt, during the Authorization Period. The aggregate amount of common stock and/or Long-term Debt to be issued by Columbia Maryland, during the Authorization Period, will not exceed $40 million. Columbia Maryland will use the proceeds of common stock and Long-term Debt to finance, in part, capital expenditures and other general and corporate purposes.[15]

Long-term notes issued by Columbia Maryland to Columbia may have maturities of up to 30 years and may be either secured or unsecured. The Utility Subsidiaries do not intend to issue any Short-term Debt externally. Instead, the Utility Subsidiaries will satisfy their short-term borrowing needs through borrowings under the Money Pool, described below.

*E. Nonutility Subsidiary Financing*

NiSource, through the Nonutility Subsidiaries, expects to continue to be active in the development and expansion of energy-related, or otherwise functionally-related, nonutility businesses. To finance investments in such competitive businesses, the Nonutility Subsidiaries will need the ability to engage in financing transactions that are commonly accepted for such types of investments.

NiSource, or a Nonutility Subsidiary, as the case may be, request authority to make loans to less than wholly owned subsidiaries at interest rates and maturities designed to provide a return to the lending company of not less than its effective cost of capital, in the limited circumstances where the Nonutility Subsidiary making the borrowing is not wholly owned, directly or indirectly, by NiSource.[16] In the

[13] Under this plan, 4,000,000 shares of Preferred Stock (designated as Series A Junior Participating Preferred Shares (''Series A Shares'')) and reserved for issuance. Each share includes one preferred purchase right (''Right''), which entitles its holder to purchase one-hundredth (1/100) of a Series A Share at a price of $60 per one-hundredth of a share, subject to adjustment. The Rights become exercisable if a person or group acquires 25% or more of the voting power of NiSource or announces a tender or exchange offer following which such person or group would hold 25% or more of NiSource's voting power. If such an acquisition is consummated, or if NiSource is acquired by the person or group in a merger or other business combination, then each Right will be exercisable for that number of shares of common stock or the acquiring company's common shares having a market value of two times the exercise price of the Right. The Rights will also become exercisable on or after the date on which the 25% threshold is triggered, if NiSource is acquired in a merger or other business combination in which NiSource is not the survivor or in which NiSource is the survivor but its common stock is changed into or exchanged for securities of another entity, cash or other property, or 50% or more of the assests or earning power of NiSource and its subsidiaries is sold. At such time, each Right will become exercisable for that number of common shares of the acquiring company having a market value of two times the exercise price of the Right, but the Rights will not be exercisable in this instance if the person who acquired sufficient shares to reach the 25% threshold did so at a price and on terms determined by the board of directors to be fair to NiSource's shareholders and in the best interests of NiSource, provided that the price per common share offered in the merger or other business combination is not less than the price paid in the offer and the form of the consideration offered in the merger or other business combination is the same as that paid in the offer, NiSource may redeem the Rights at a price of $.01 per Right prior to the occurrence of an event that causes the Rights to be exercisable for common stock. The Rights will expire on March 12, 2010.

[14] Columbia will continue to provide equity and long-term debt capital to its Utility and Nonutility Subsidiaries in the form of purchases of additional equity securities, cash capital contributions and open account advances under rule 45(b), and intercompany loans, which, except in the case of Columbia Maryland, are exempt under rule 52.

[15] Because Columbia Maryland is a Delaware corporation, it is not able to rely upon rule 52(a) for an exemption from sections 6(a) and 7 of the Act. Other than Columbia Maryland, the issue and sale of securities by the utility Subsidiaries will be exempt, under rule 52(a), from the preapproval requirements of sections 64(a) and 7 of the Act, as most such securities must be approved by the public service commission in the state in which each Utility Subsidiary is incorporated and operating.

Specifically, the Indiana Utility Regulatory Commission must approve all financings by Northern Indiana, Kokomo and NIFL, other than short-term indebtedness having a maturity of 12 months or less; the Massachusetts Department of Telecommunications and energy must approve all financings by Bay State other than short-term indebtedness having a maturity of one year or less; the New Hampshire Public Utilities Commission (''NHPUC'') must approve most financings by Northern Utilities other than short-term indebtedness having a maturity of one year or less up to a maximum amount equal to 10% of net plant; the Public Utilities Commission of Ohio must approve all financings by Columbia Ohio other than short-term indebtedness with a maturity of less than one year, the Public Service Commission of Kentucky must approve all financings by Columbia Kentucky other than notes with a maturity of less than two years; the Pennsylvania Public Utilities Commission must approve all financings by Columbia Pennsylvania other than short-term indebtedness with a maturity of one year or less or having no fixed maturity but payable on demand; and the Virginia State Corporation Commission must approve all financings by Columbia Virginia other than short-term indebtedness with a maturity of less than one year if the amount is less than 12% of total capitalization of Columbia Virginia.

[16] Applicants believe that, in almost all cases, financings by the Nonutility Subsidiaries will be exempt from Commission authorization pursuant to rule 52(b). To be exempt under rule 52(b), any loans by NiSource to a Nonutility Subsidiary, or by any Nonutility Subsidiary, including a Financing Subsidiary, to another Nonutility Subsidiary, must have interest rates and maturities that are designed

Continued

event loans are made to a less than wholly owned Nonutility Subsidiary, Applicants represent that the company will not sell any services to any associate company unless it falls within one of the categories of companies to which goods and services may be sold on a basis other than ''at cost,'' as described below in section XI (Sales of Services and Goods Among Subsidiaries).

**III. Continuation of Money Pool**

NiSource, the Utility Subsidiaries and certain Nonutility Subsidiaries request authorization to continue to participate in the Money Pool. The Money Pool participants request authorization, during the Authorization Period, to make unsecured short-term borrowings from the Money Pool, to contribute surplus funds to the Money Pool and to lend and extend credit to (and acquire promissory notes from) one another through the Money Pool. NiSource, directly or indirectly, through NiSource Finance, requests authorization to invest surplus funds and/or lend and extend credit to the participating subsidiaries through the Money Pool.

The following direct and indirect Nonutility Subsidiaries are participants in the Money Pool, in addition to NiSource and Columbia and the ten Utility Subsidiaries:

NiSource Corporate Services Company
EnergyUSA, Inc. (an Indiana corporation)
EnergyUSA–TPC Corp.
EnergyUSA, Inc. (a Massachusetts corporation)
PEI Holdings, Inc.
NiSource Capital Markets, Inc.
NiSource Finance Corp.
Granite State Transmission, Inc.
Crossroads Pipeline Company
NiSource Development Company, Inc.
NI Energy Services, Inc.
NiSource Energy Technologies, Inc.
Columbia Gas Transmission Corporation
Columbia Gulf Transmission Company
Columbia Assurance Agency, Inc.
Columbia Accounts Receivable Corporation
Columbia Atlantic Trading Corporation
Columbia Deep Water Services Company
Columbia Remainder Corporation
Columbia Energy Services Corporation
NiSource Insurance Corporation Limited

In addition, Applicants propose that other existing or new nonutility subsidiaries of NiSource may participate in the Money Pool, as investors only, without further approval of the Commission. NiSource, Columbia, NiSource Finance and Capital Markets will continue to participate in the Money Pool as investors only and not as borrowers. EWGs, FUCOs, and ETCs will be specifically excluded from participating in the Money Pool as borrowers.

The Utility Subsidiaries (other than Columbia Virginia)[17] request authority to make borrowings through the Money Pool in the following maximum amounts at any time outstanding:

| Utility subsidiary | Borrowing limit |
|---|---|
| Northern Indiana | $1,000,000,000 |
| Kokomo | 50,000,000 |
| NIFL | 50,000,000 |
| Bay State | 300,000,000 |
| Northern Utilities[18] | 50,000,000 |
| Columbia Ohio | 700,000,000 |
| Columbia Kentucky | 80,000,000 |
| Columbia Pennsylvania | 300,000,000 |
| Columbia Maryland | 50,000,000 |

Borrowings from the Money Pool by participating Subsidiaries that are authorized to borrow from the Money Pool (*i.e.*, ''Eligible Borrowers''), other than Utility Subsidiary borrowers, are exempt under rule 52(b).

**IV. Guarantees**

*Parent Guarantees.* NiSource, directly or indirectly, through one or more Financing Subsidiaries, and Columbia request authorization to provide Parent Guarantees of debt securities or contractual obligations of any Subsidiary as may be appropriate in the ordinary course of a Subsidiary's business, in an aggregate principal or nominal amount, in the case of NiSource, not to exceed $3.5 billion and, in the case of Columbia, not to exceed $3.5 billion outstanding at any one time. In addition, Applicants state that the amount of any Parent Guarantees of any Subsidiary obligations shall also be subject to the limitations of rule 53(a)(1) or rule 58(a)(1), as applicable. Parent Guarantees may take the form of, among others, direct guarantees, reimbursement undertakings under letters of credit, ''keep well'' undertakings, indemnification agreements and expense reimbursement agreements. Any Parent Guarantee that is outstanding at the end of the Authorization Period shall remain in force until it expires or terminates in accordance with its terms.

In addition, NiSource and Columbia request authorization to charge each Subsidiary a fee for each Parent Guarantee. The fee proposed will not be greater than the cost, if any, of obtaining the liquidity necessary to perform on the Parent Guarantee (for example, bank line commitment fees or letter of credit fees, plus other transactional expenses) for the period of time that it remains outstanding.

*Nonutility Subsidiary Guarantees.* In addition to guarantees that may be provided by NiSource or Columbia or by a Financing Subsidiary of either, as described above, Nonutility Subsidiaries (including Financing Subsidiaries without credit support from NiSource or Columbia) request authority to provide, to other Nonutility Subsidiaries, Nonutility Subsidiary Guarantees (*i.e.*, guarantees of indebtedness or contractual obligations, or other forms of credit support, in an aggregate principal amount not to exceed $2 billion outstanding at any one time, exclusive of any guarantees and other forms of credit support that are exempt under rules 45(b) and 52(b)). Nonutility Subsidiaries request authorization to charge associate companies a fee for each guarantee, determined in the same manner as specified above.

**V. Hedging Transactions**

NiSource and the Subsidiaries request authorization to enter into Interest Rate Hedges in order to reduce or manage interest rate cost, subject to certain limitations and restrictions. NiSource and the Subsidiaries also request authorization to enter into Anticipatory Hedges, subject to certain limitations and restrictions.

**VI. Changes in Capitalization of Majority-Owned Subsidiaries**

In order to accommodate the proposed sale of capital securities (*i.e.*, common stock or Preferred Stock) transactions and provide for future issues, NiSource and the Subsidiaries request authority to change the terms of any 50% or more owned Subsidiary's authorized capital stock capitalization, or other equity interests, by an amount deemed appropriate by NiSource or other intermediate parent company.[19] Applicants state that the consents of all other shareholders will have been

to parallel the lending company's effective cost of capital.

[17] Columbia Virginia borrowings under the Money Pool are exempt under rule 52(a).

[18] Borrowings by Northern Utilities under the Money Pool that are in excess of 10% of its net fixed plant must be approved by the NHPUC and, therefore, would be exempt under rule 52(a).

[19] Applicants state that the portion of an individual Subsidiary's aggregate financing to be effected through the sale of stock to NiSource or another immediate parent company during hte Authorization Period cannot be ascertained at this time. The sale of capital securities (*i.e.,* common stock or Preferred Stock) may in some cases exceed the then authorized capital stock of a Subsidiary and a Subsidiary may choose to use capital stock with no par value.

obtained for the proposed change. This request for authorization is limited to NiSource's 50% or more owned Subsidiaries and is not intended to affect aggregate limits or other conditions.

Applicants further propose that a Subsidiary would be able to change the par value, or to change between par value and no par stock, or to change the form of equity from common stock to limited partnership or limited liability company interests or similar instruments, or from such instruments to common stock, without additional Commission approval. Any action by a Utility Subsidiary would be subject to, and would only be taken upon, the receipt of any necessary approvals by the state commission in the state or states where the Utility Subsidiary is incorporated and doing business. In addition, Applicants state that NiSource will be subject to all applicable laws regarding the fiduciary duty of fairness of a majority shareholder to minority shareholders in any such 50% or more owned Subsidiary and NiSource will undertake to ensure that any change comports with such legal requirements.

**VII. Financing Subsidiaries**

NiSource and the Subsidiaries request authority to organize and acquire the equity securities of one or more corporations, trusts, partnerships or other entities organized specifically for the purpose of financing the activities of NiSource and certain of its Subsidiaries (''Financing Subsidiaries''), in addition to the two previously authorized.[20] Specifically, Financing Subsidiaries may be organized to issue Preferred Securities (including but not limited to monthly income preferred securities), Long-term Debt and Short-term Debt to third parties and to transfer the proceeds of the financings to NiSource or other Subsidiaries.

NiSource and Subsidiaries also request authorization to issue their subordinated unsecured notes (''Subordinated Notes'') to any Financing Subsidiary to evidence the transfer of financing proceeds by a Financing Subsidiary to its parent company. The principal amount, maturity and interest rate on any such Subordinated Notes will be designed to parallel the amount, maturity and interest or distribution rate on the securities issued by a Financing Subsidiary. The amount of securities issued by any Financing Subsidiary to third parties will be included in the overall external financing limitation, if any, authorized for the immediate parent company of the Financing Subsidiary. The amount of Subordinated Notes issued by a parent company to its Financing Subsidiary will not be counted against the external financing limitation, to avoid double counting.

**VIII. Intermediate Subsidiaries**

NiSource requests authority to acquire, directly or indirectly, during the Authorization Period, the securities of one or more additional Intermediate Subsidiaries, which would be organized exclusively for the purpose of acquiring, holding and/or financing the acquisition of the securities of, or other interest in, one or more EWGs or FUCOs, Rule 58 Subsidiaries, ETCs or other non-exempt Nonutility Subsidiaries (as may be authorized in this proceeding or in a separate proceeding).[21] In addition, NiSource requests that its Intermediate Subsidiaries be permitted to engage in administrative activities and development activities (''Administrative Activities'' and ''Development Activities,'' respectively, as defined further below) relating to such subsidiaries. ''Administrative Activities'' include ongoing personnel, accounting, engineering, legal, financial and other support activities necessary to manage NiSource's investments in Nonutility Subsidiaries. ''Development Activities'' will be limited to due diligence and design review; market studies; preliminary engineering; site inspection; preparation of bid proposals, including, posting of bid bonds; application for required permits and/or regulatory approvals; acquisition of site options and options on other necessary rights; negotiation and execution of contractual commitments with owners of existing facilities, equipment vendors, construction firms, power purchasers, thermal ''hosts,'' fuel suppliers and other project contractors; negotiation of financing commitments with lenders and other third-party investors; and such other preliminary activities as may be required in connection with the purchase, acquisition, financing or construction of facilities or the acquisition of securities of or interests in new businesses.

NiSource also requests an exemption under section 13(b) of the Act for Intermediate Subsidiaries to provide management, administrative, project development and operating services to associate companies at fair market prices in the specific circumstances discussed further below. *See* section XI (Sales of Services and Goods Among Subsidiaries).

Applicants state that investments in Intermediate Subsidiaries may take the form of any combination of the following: (1) Purchases of capital shares, partnership interests, member interests in limited liability companies, trust certificates or other forms of equity interests; (2) capital contributions; (3) open account advances with or without interest; (4) loans; and (5) guarantees issued, provided or arranged, for the securities or other obligations of any Intermediate Subsidiaries. Applicants state, further, that funds for any direct or indirect investment in any Intermediate Subsidiary will be obtained from (1) financings authorized in this proceeding; (2) any appropriate future debt or equity securities issuance authorization of NiSource; and (3) other available cash resources, including proceeds of securities sales by Nonutility Subsidiaries under rule 52.[22]

**IX. Reorganizations of Nonutility Subsidiaries**

NiSource requests approval to consolidate or otherwise reorganize all, or any part, of its direct and indirect ownership interests in Nonutility Subsidiaries and the activities and functions related to such investments. NiSource requests authorization to consolidate, or otherwise reorganize under one or more, direct or indirect, Intermediate Subsidiaries, NiSource's ownership interests in existing and future Nonutility Subsidiaries. The transactions may take the form of a Nonutility Subsidiary selling, contributing or transferring the equity securities of a subsidiary or all or part of such subsidiary's assets as a dividend to an Intermediate Subsidiary, or to another Nonutility Subsidiary and the acquisition, directly or indirectly, of the equity securities or assets of a subsidiary, either by purchase or by receipt of a dividend. The purchasing Nonutility Subsidiary in any transaction structured as an intrasystem sale of equity securities or assets may execute and deliver its promissory note

[20] NiSource, as noted previously, currently owns the stock of two Financing Subsidiaries: NiSource Finance and Capital Markets.

[21] The Commission has previously authorized Columbia to organize intermediate subsidiary companies to acquire and hold various nonutility subsidiaries. *See Columbia Energy Group, Inc., et al.,* Holding Co. Act Release No. 27099 (Nov. 5, 1999).

[22] Applicants state that, to the extent that NiSource provides funds or guarantees, directly or indirectly, to an Intermediate Subsidiary that are used to make an investment in any EWG or FUCO or a Rule 58 Subsidiary, the amount of such funds or guarantees will be included in NiSource's ''aggregate investment'' in such entities, as calculated in accordance with rule 53 or rule 58, as applicable.

evidencing all, or a portion, of the consideration given.[23]

**X. Expenditures on Development Activities**

NiSource requests a continuation of its authority under the November 1, 2000 Order to make expenditures on Development Activities, as defined above, in an aggregate amount of up to $250 million. NiSource proposes a ''revolving fund'' concept for permitted expenditures on Development Activities: The revolving fund concept would be that, to the extent expenditures on Development Activities are made for a Nonutility Subsidiary which then becomes an EWG or FUCO, or qualifies as an ''energy-related company'' under rule 58, the amount expended will cease to be an expenditure for Development Activities and will, instead, be counted as part of the ''aggregate investment'' in the entity under rule 53 or 58, as applicable.

**XI. Sales of Services and Goods Among Subsidiaries**

The Nonutility Subsidiaries request an exemption under section 13(b) from the at cost standards of rules 90 and 91, to the extent necessary, to provide services and sell goods to one another at fair market prices, determined without regard to cost, where the Nonutility Subsidiary purchasing the service or good is: (i) A FUCO or foreign EWG that derives no part of its income, directly or indirectly, from the generation, transmission, or distribution of electric energy for sale within the U.S.; (ii) an EWG that sells electricity at market-based rates, that have been approved by the Federal Energy Regulatory Commission (''FERC''), *provided that* the purchaser is not Northern Indiana; (iii) a ''qualifying facility'' (''QF''), within the meaning of the Public Utility Regulatory Policies Act of 1978, as amended (''PURPA''), that sells electricity exclusively (a) at rates negotiated at arms length to one or more industrial or commercial customers purchasing electricity for their own use and not for resale, and/or (ii) to an electric utility company (other than Northern Indiana) at the purchaser's ''avoided cost,'' as determined in accordance with PURPA regulations; (iv) a domestic EWG or QF that sells electricity at rates based upon its cost of service, as approved by FERC or any state public-utility commission having jurisdiction, *provided that* the purchaser is not Northern Indiana; or (v) a Rule 58 Subsidiary or any other Nonutility Subsidiary that (a) is partially owned by NiSource, *provided that* the ultimate purchaser of the goods or services is not a Utility Subsidiary, NiSource Services (or any other entity within the NiSource system whose activities and operations are primarily related to the provision of goods and services to Utility Subsidiaries), (b) is engaged solely in the business of developing, owning, operating and/or providing services or goods to Nonutility Subsidiaries, described in clauses (i) through (iv) immediately above, or (c) does not derive, directly or indirectly, any material part of its income from sources within the U.S. and is not a public-utility company operating within the U.S.

**XII. Activities of Energy-Related Subsidiaries Outside the U.S.**

NiSource, on behalf of any current or future Nonutility Subsidiaries, requests authority for its Nonutility Subsidiaries to engage in certain ''energy-related'' activities outside the U.S. Such activities may include: (i) The brokering and marketing of electricity, natural gas and other energy commodities (''Energy Marketing''); (ii) energy management services (''Energy Management Services''), including the marketing, sale, installation, operation and maintenance of various products and services related to energy management and demand-side management, including energy and efficiency audits; facility design and process control and enhancements; construction, installation, testing, sales and maintenance of (and training client personnel to operate) energy conservation equipment; design, implementation, monitoring and evaluation of energy conservation programs; development and review of architectural, structural and engineering drawings for energy efficiencies, design and specification of energy consuming equipment; and general advice on programs; the design, construction, installation, testing, sales and maintenance of new and retrofit heating, ventilating, and air conditioning, electrical and power systems, alarm and warning systems, motors, pumps, lighting, water, water-purification and plumbing systems, and related structures, in connection with energy-related needs; and the provision of services and products designed to prevent, control, or mitigate adverse effects of power disturbances on a customer's electrical systems; and (iii) engineering, consulting and other technical support services (''Consulting Services'') with respect to energy-related businesses, as well as for individuals. Such Consulting Services would include technology assessments, power factor correction and harmonics mitigation analysis, meter reading and repair, rate schedule design and analysis, environmental services, engineering services, billing services (including consolidation billing and bill disaggregation tools), risk management services, communications systems, information systems/data processing, system planning, strategic planning, finance, feasibility studies, and other similar services.

NiSource requests authority for Nonutility Subsidiaries to engage in Energy Marketing activities in Canada. NiSource also requests the Commission to reserve jurisdiction over Energy Marketing activities outside of Canada, pending completion of the record. Further, NiSource requests authority for Nonutility Subsidiaries to provide Energy Management Services and Consulting Services anywhere outside the United States. NiSource asks the Commission to reserve jurisdiction over other activities of Nonutility Subsidiaries outside the United States, pending completion of the record. In addition, NiSource requests authorization for Nonutility Subsidiaries to engage in ''gas-related company'' activities outside the United States, subject to certain proposed limitations and a request for reservation of jurisdiction. Specifically, NiSource requests approval for Nonutility Subsidiaries to engage in the development, exploration and production of natural gas and oil in Canada and to invest up to $300 million in the equity securities or assets of new or existing companies that derive substantially all of their income from such activities. NiSource also requests approval for Nonutility Subsidiaries to invest, directly or indirectly, through other Subsidiaries, in natural gas pipelines or storage facilities located outside the U.S. Investments in the entities would count against the $300 million investment limitation. NiSource requests the Commission (i) to reserve jurisdiction over the proposed exploration and production activities in foreign countries, other than Canada, pending completion of the record.

[23] Applicants state that each transaction would be carried out in compliance with all applicable U.S or foreign laws and accounting requirements and any transaction structured as a sale would be carried out for a consideration equal to the book value of the equity securities being sold. The Commission has authorized other registered holding companies to carry out future reorganizations of their nonutility businesses without further approval. *See Columbia Energy Group, Inc., et al.,* Holding Co. Act Release No. 27099 (Nov. 5, 1999).

## XIII. Distributions Out of Capital or Unearned Surplus

*Distributions by Columbia.* Columbia requests authorization to transfer some or all of the net proceeds of any sale or sales of the securities or assets of Nonutility Subsidiaries of Columbia to NiSource, either by paying a dividend or by repurchasing shares of its common stock that are held by NiSource. Columbia has sold or entered into agreements to sell the stock or assets of several of its Nonutility Subsidiaries since being acquired by NiSource and seeks to distribute some or all of the proceeds to NiSource.[24] The ability of Columbia to distribute the cash proceeds from the sales to NiSource as a dividend is limited by section 12(c) of the Act and rules 26(c) and 46. Columbia states that it will not pay any dividend to NiSource or repurchase shares of its common stock from NiSource if, as a result, common equity as a percentage of its capitalization would be less than 30% on a consolidated basis.

*Payment of Dividends by Nonutility Subsidiaries.* NiSource also proposes, on behalf of its current and future Nonutility Subsidiaries, that they be permitted to pay dividends, through the Authorization Period, out of capital and unearned surplus, to the extent permitted under applicable corporate law and the terms of any credit agreements and indentures that restrict the amount and timing of distributions to shareholders.

## XIV. Tax Allocation Agreement

Applicants request authorization to continue to file consolidated income tax returns for tax years ending during the Authorization Period in accordance with the previously approved Tax Allocation Agreement. Applicants are authorized to file consolidated income tax returns and allocate the consolidated income tax liability of the group in accordance with the Tax Allocation Agreement which does not conform in all respects to the requirements of rule 45(c). *See* Supplemental Order dated September 12, 2002 (SEC File No. 70–9681). Specifically, under the Tax Allocation Agreement, NiSource is permitted to retain the benefit (*i.e.*, the tax savings) in consolidated tax liability that is attributable to the interest expense on the acquisition debt,[25] subject to certain limitations and restrictions.

## E.ON AG, et al. (70–10171)

E.ON AG (''E.ON''), a registered public-utility holding company under the Act, and Hibernia Industriewerte GmbH (''Hibernia''), a wholly owned nonutility subsidiary (together ''Applicants''), both located at E.ON-Platz 1 40479 Düsseldorf, Germany, have filed an application (''Application'') under sections 6(a), 7, 9(a), 10 and 12(b) of the Act and rules 45 and 54. The Applicants request authorization to modify certain terms of the E.ON nonutility money pool (''E.ON Nonutility Money Pool'') permitted by a previous Commission order, dated June 14, 2002 (Holding Co. Act Release No. 27539) (''June 2002 Order'').

E.ON proposes (1) that the E.ON Nonutility Money Pool be administered by Hibernia, an E.ON subsidiary currently used to provide financing to all of the companies in the E.ON registered holding company system (the ''E.ON Group''), and (2) that the interest rate paid to lenders to the pool be set at market rates.

## Background

By the June 2002 Order, the Commission authorized E.ON to acquire Powergen plc, a registered public-utility holding company, and, subsequent to the acquisition, E.ON registered as a public-utility holding company. The June 2002 Order also authorized E.ON and its subsidiaries to issue and sell securities and, further, authorized E.ON to establish three money pools, including the E.ON Nonutility Money Pool, to facilitate the financing of the E.ON Group.[26] The E.ON Nonutility Money Pool, the subject of the Application, includes as participants all the companies in the E.ON Group, as borrowers and lenders to the pool, except E.ON, the registered holding company subsidiaries of E.ON, and LG&E Energy and its subsidiaries. E.ON and its registered holding company subsidiaries may lend funds to the E.ON Nonutility Money Pool.

Under the June 2002 Order, the E.ON Nonutility Money Pool was authorized to ''be administered by E.ON at no charge or by E.ON NA or its special purpose subsidiary at cost. The interest rate charged by the pool would be set according to the Market Rate Method[27] and surplus funds would be invested in the same manner proposed for the Utility Money Pool. The interest rate paid on deposits to the E.ON Nonutility Money Pool [would] be a weighted average of the rates charged borrowers and the money pool investment rate.''[28]

## The Proposal

E.ON now proposes that the E.ON Nonutility Money Pool be administered by Hibernia, a different affiliate, and that the interest rate paid to lenders to the pool be set at market rates. First, with respect to the change in the money pool administrator, the Applicants state that Hibernia would receive financial management services from E.ON employees in connection with managing the pool, and conducting Hibernia's other functions, as an E.ON Group financing entity. The Applicants state that these services would be provided at no charge, unless a Commission exemption from the restrictions of section 13(a) is obtained. In addition, the E.ON Nonutility Money Pool will operate as described in the June 2002 Order[29] and as elaborated on in the Application.

Secondly, Applicants state that authorizing the proposed change in interest rates to the payment of market rates will avoid the transfer pricing issues that arise in loans between affiliated companies when transactions

[24] Columbia has sold or announced its agreement to sell the stock or assets of Columbia LNG Corporation, Columbia Energy Retail Corporation, Columbia Electric Corporation and its subsidiaries, Columbia Propane Corporation, Columbia Petroleum Corporation, Columbia Energy Resources, Inc. and its subsidiaries, Columbia Transmission Communications Corporation and Columbia Service Partners, Inc. and its subsidiaries.

[25] The acquisition debt includes $2.95 billion of senior unsecured notes with varying maturities, between April 15, 2003 and November 15, 2010, that were issued by NiSource Finance to refinance most of the commercial paper borrowings incurred by NiSource Finance during the merger in order to fund the cash portion of the consideration paid for Columbia's shares and certain debentures. The term also includes indebtedness that may be incurred by NiSource or NiSource Finance during the Authorization Period for the purpose of refinancing any of the acquisition indebtedness. For the tax year ended December 31, 2001, the tax benefit attributable to the interest expense on the debt was approximately $100.2 million and, for the tax year ended December 31, 2002, it is estimated that the tax benefit will be approximately $97.0 million.

[26] Specifically, E.ON was authorized to organize: (1) A Utility Money Pool to include E.ON's public utility subsidiary companies, Louisville Gas and Electric Company and Kentucky Utilities Company as borrowers and lenders to the pool, and certain other companies as lenders only; (2) a U.S. Nonutility Money Pool to include the nonutility subsidiaries of LG&E Energy Corp., as borrowers and lenders to the pool, and certain other companies as lenders only, and; (3) the E.ON Nonutility Money Pool.

[27] In determining a lending rate under the Market Rate Method, the Money Pool administrator would review the nature of each borrowing subsidiary's business, evaluate its capital structure, the particular risks to which it is subject and generally prevailing market conditions, all in the context of information from third parties (such as banks) that would indicate the prevailing market rates for similar businesses. Information on the range of rates used by one or more banks for loans to similar businesses would serve as an index against which an appropriate market rate could be determined. This analysis is referred to as the Market Rate Method and would be provided to the Commission upon request. June 2002 Order at 109.

[28] June 2002 Order at 83.

[29] *See generally* June 2002 Order at 81–83.

are not priced at market rates.[30] Applicants state that the intercompany loans from pool participants to Hibernia for the E.ON Nonutility Money Pool should be priced at market rates in order to better meet the transfer pricing and affiliate transactions requirements.[31] Applicants state, furthermore, that changing to market interest rates on money pool deposits is fair to a lender because it provides the lender with an arm's-length interest rate that is better, or equivalent to, what a lender could earn in separate bank account.

The Applicants state that the requirement under German law that affiliate transactions be conducted at arm's length makes it important that Hibernia pay pool depositors interest at market rates. Applicants state that, in addition, new legislation recently introduced in the German parliament will require documentation of all transactions with affiliated companies to substantiate that the transactions are conducted at arm's length. Applicants further state that, operating the E.ON Nonutility Money Pool, as currently authorized, may cause Hibernia to pay interest at above-market rates and may conflict with this proposed legislation. Applicants assert that having Hibernia operate the E.ON Nonutility Money Pool to pay market rates on both sides of the pool transactions will provide a solution consistent with the Market Rate Method financing authorization of the Commission in the June 2002 Order, consistent with current and proposed requirements of German law and be fair to the E.ON Group participants in the pool.

**E.ON AG, et al. (70–10176)**

E.ON AG (''E.ON''), E.ON-Platz 1, 40479 Dusseldorf, Germany, a registered holding company, E.ON U.S. Investments Corp. (''EUSIC''), a registered holding company, and LG&E Energy Corp. (''LG&E Energy''), a subsidiary of E.ON and a public utility holding company exempt from registration by order under section 3(a)(1) of the Act, both located at 220 West Main Street, Louisville, Kentucky 40202 (collectively, ''Applicants''), have filed an application-declaration (''Application'') under sections 3(a)(1), 6(a), 7, 9(a), 10 and 12(d) of the Act and rules 43 and 54 under the Act. Applicants request authority to reorganize LG&E Energy resulting in a change of organizational form from a Kentucky corporation to a Kentucky limited liability company (the ''Transaction'').

E.ON became a registered holding company under the Act on July 1, 2002, as a result of E.ON's acquisition of Powergen plc (''Powergen''). The Commission approved the acquisition in Holding Company Act Release No. 27539 (June 14, 2002) (the ''Acquisition Order''). E.ON owns LG&E Energy, which in turn owns two public utility companies, Louisville Gas and Electric Company (''LG&E'') and Kentucky Utilities Company (''KU''). E.ON's interest in LG&E Energy is held indirectly through several intermediate holding companies with EUSIC being the direct parent of LG&E Energy.

As stated above, LG&E Energy is a wholly-owned, first tier subsidiary of EUSIC. LG&E Energy proposes to change its organizational form from a Kentucky corporation to a Kentucky limited liability company. Applicants state that in order to accomplish the Transaction under Kentucky law and in a tax-efficient manner, the following successive steps must be completed. First, New LG&E Energy will be formed by EUSIC as a Kentucky limited liability company. At this point, EUSIC will be the sole member of New LG&E Energy. Second, LG&E Energy will transfer to New LG&E Energy substantially all of its assets and liabilities in exchange for membership interests in New LG&E Energy. Then, pursuant to an agreement and plan of merger, LG&E Energy will merge with and into New LG&E Energy (the ''Merger''), with New LG&E Energy as the surviving entity and as successor to LG&E Energy. To effect the Merger, New LG&E Energy will file Articles of Merger with the Secretary of State of the Commonwealth of Kentucky. The Merger will be effective upon acceptance of such filing by the Secretary of State of the Commonwealth of Kentucky. Thus, when the Transaction is completed, LG&E Energy will continue to be wholly-owned by EUSIC, with the only substantive change being that LG&E Energy will have changed its organizational form from a Kentucky corporation to a Kentucky limited liability company.

In addition to requesting authorization under the Act for the Transaction, Applicants request that the Commission issue an order exempting New LG&E Energy, as the owner of LG&E and KU, from registration under the Act under section 3(a)(1) of the Act. LG&E Energy is exempt from registration under the Act pursuant to section 3(a)(1) of the Act. Applicants state that the proposed Transaction, which merely effects a change of the organizational structure of LG&E Energy, does not change any of the facts underlying the qualification of LG&E Energy for exemption from registration under the Act pursuant to section 3(a)(1) of the Act and, accordingly, that New LG&E Energy, as the successor to LG&E Energy, qualifies for the exemption from registration under the Act pursuant to section 3(a)(1) of the Act.

New LG&E Energy will succeed to LG&E Energy's ownership of LG&E and KU, as well as its nonutility subsidiaries. New LG&E Energy will also be the successor of LG&E Energy with respect to its commitments and authorizations set forth in the

[30] The transfer pricing issues were described in E.ON's application in SEC File No. 70–9985, which formed the basis in part for the June 2002 Order. E.ON's application stated that, in transactions between German companies and their foreign subsidiaries, German tax law assumes market rate financing between companies in the same corporate group because market rate pricing assures that intercompany loans will not be used to transfer profits from one related entity to another (including, to transfer profits to entities based outside Germany in jurisdictions with lower tax rates). Section 1 of the German Foreign Tax Law provides: ''If the income of a taxpayer resulting from his transaction with the related party is reduced because the taxpayer has, in the transaction with the foreign related party, agreed on terms and conditions which deviate from those which unrelated third parties would have agreed to upon under the same or similar circumstances, then the taxpayer's income shall, not withstanding other provisions, be so determined as if such income would have been earned under terms and conditions agreed upon between unrelated parties.''

[31] The Applicants state that German corporations also are required by corporate law to conduct affiliate transactions on an arm's-length basis. German corporate law requires all joint stock companies to provide a dependency statement that addresses affiliate relationships in their annual financial reports. The dependency statement almost always concludes that all transactions with affiliated companies have been conducted on an arm's-length basis and not to the reporting company's disadvantage because a failure to follow arm's-length terms could subject the company to a shareholder suit.

German joint stock company law sets additional specific requirements for the conduct of business between group companies. Any disadvantageous influence of the parent company on its subsidiary is restricted and any damage caused by the parent must be compensated. If not compensated, the parent and its legal representatives (in this context, the management board and the supervisory board), would be subject to damage claims. Under Section 57 of the Joint Stock Company Act (Germany), a German joint stock company may not repay to its shareholders any capital contributed by them. Any payments to shareholders must be made only from company profits as shown in the balance sheet. A prohibited repayment of capital can occur implicitly if a transaction between a company and its shareholder shows a disproportion or incongruity between consideration and performance. This would be the case if there are market prices or rates for the respective consideration and these are not taken into account in the relevant transaction. The legal consequence under the Joint Stock Company Act of any such repayment of capital is that the respective transaction or contract would be legally void, overpayments must be reimbursed and the management board may be subject to damage claims. Interest payments on funds loaned to affiliated companies that are either above or below market can, therefore, raise difficult issues under German law and in many cases would be prohibited.

Acquisition Order and any and all other orders of the Commission applicable to LG&E Energy.

For the Commission, by the Division of Investment Management, pursuant to delegated authority.

**Margaret H. McFarland,**

*Deputy Secretary.*

[FR Doc. 03–29763 Filed 11–28–03; 8:45 am]

BILLING CODE 8010–01–P

## SECURITIES AND EXCHANGE COMMISSION

**[Release No. 34–48817; File No. SR–CSE–2003–10]**

## Self-Regulatory Organizations; The Cincinnati Stock Exchange, Inc.; Order Granting Approval of Proposed Rule Change by The Cincinnati Stock Exchange, Inc. To Eliminate Market Order Exposure Requirements

November 21, 2003.

### I. Introduction

On August 7, 2003, The Cincinnati Stock Exchange, Inc. (''CSE'' or ''Exchange'') filed with the Securities and Exchange Commission (''Commission''), pursuant to Section 19(b)(1) of the Securities Exchange Act of 1934 (''Act'')[1] and Rule 19b–4 thereunder,[2] a proposed rule change to amend CSE Rule 11.9(u) to eliminate Interpretation .01, concerning market order exposure requirements (''Market Order Exposure Requirement'').[3] The proposed rule change would also amend CSE Rule 8.15 to remove a reference to Interpretation .01 of Rule 11.9(u). The proposed rule change was published for comment in the **Federal Register** on September 19, 2003.[4]

The Commission received no comments on the proposal. This order approves the proposed rule change.

### II. Discussion and Commission Findings

The Commission finds that the proposed rule change is consistent with the requirements of the Act and the rules and regulations thereunder applicable to a national securities exchange.[5] In particular, the Commission believes that the proposed rule change is consistent with Section 6(b) of the Act,[6] in general, and furthers the objectives of Section 6(b)(5),[7] in particular, in that it is designed to prevent fraudulent and manipulative acts and practices, to promote just and equitable principles of trade, to foster cooperation and coordination with persons engaged in regulating, clearing, settling, processing information with respect to, and facilitating transactions in securities, to remove impediments to and perfect the mechanism of a free and open market and a national market system, and in general, to protect investors and the public interest.

The Commission finds that the proposed rule change is reasonably designed to accomplish these ends because the elimination of the CSE's Market Order Exposure Requirement is consistent with the narrowing of spreads since the advent of decimal pricing. The Commission notes, and the CSE acknowledges, that the best execution responsibilities of preferencing designated dealers will continue to apply. Moreover, the proposed rule change is the second of two filings intended by the CSE to codify existing CSE practices set forth in various regulatory circulars[8] and conform its rules to industry standards.[9] The Commission notes that, while it is approving the proposed rule change at the present time, the Commission makes no determination as to whether it would have approved the proposed rule change had it been filed at the time that the regulatory circulars setting forth the CSE's practices with respect to the Market Order Exposure Requirement were issued.

### III. Conclusion

*It Is Therefore Ordered,* pursuant to Section 19(b)(2) of the Act,[10] that the proposed rule change (SR–CSE–2003–10), be, and it hereby is, approved.

For the Commission, by the Division of Market Regulation, pursuant to delegated authority.[11]

**Margaret H. McFarland,**

*Deputy Secretary.*

[FR Doc. 03–29801 Filed 11–28–03; 8:45 am]

BILLING CODE 8010–01–P

[1] 15 U.S.C. 78s(b)(1).

[2] 17 CFR 240.19b–4.

[3] The CSE has represented that the Commission's approval of the proposed rule change will constitute the repeal of the interpretations and policies with respect to the Market Order Exposure Requirement set forth in CSE Regulatory Circulars 01–07, 99–03, 98–06, 97–07, 96–04.

[4] Securities Exchange Act Release No. 48491 (September 12, 2003), 68 FR 54924.

[5] In approving this proposed rule change, the Commission has considered the proposed rule's impact on efficiency, competition, and capital formation. 15 U.S.C. 78c(f).

[6] 15 U.S.C. 78f(b).

[7] 15 U.S.C. 78f(b)(5).

[8] *See supra* note 3.

[9] *See also* Securities Exchange Act Release No. 48388 (August 21, 2003), 68 FR 51820 (August 28, 2003) (SR–CSE–2003–09).

[10] 15 U.S.C. 78(b)(2).

[11] 17 CFR 200.30–3(a)(12).

## SECURITIES AND EXCHANGE COMMISSION

**[Release No. 34–48823; File No. SR–NASD–2003–154]**

## Self-Regulatory Organizations; Notice of Filing and Immediate Effectiveness of Proposed Rule Change and Amendment Nos. 1 and 2 by the National Association of Securities Dealers, Inc. Concerning Late Trade Reports, Reports of Trades Executed Outside Normal Market Hours, and Clarifying NASD Rule 6420

November 21, 2003.

Pursuant to Section 19(b)(1) of the Securities Exchange Act of 1934 (''Act''),[1] and Rule 19b–4 thereunder,[2] notice is hereby given that on October 7, 2003, the National Association of Securities Dealers, Inc. (''NASD''), through its subsidiary, The Nasdaq Stock Market, Inc. (''Nasdaq''), filed with the Securities and Exchange Commission (''Commission'') the proposed rule change as described in Items I, II, and III below, which Items have been prepared by Nasdaq. Nasdaq amended the proposed rule change on November 12, 2003.[3] On November 20, 2003, Nasdaq again amended the proposed rule change.[4] Nasdaq filed the proposed rule change pursuant to Section 19(b)(3)(A)(i) of the Act,[5] and Rule 19b–4(f)(1) thereunder,[6] as one constituting a stated policy, practice, or interpretation with respect to the meaning, administration, or enforcement of an existing rule, which renders the proposed rule change effective upon filing with the Commission. The Commission is

[1] 15 U.S.C. 78s(b)(1).

[2] 17 CFR 240.19b–4.

[3] *See* November 10, 2003 letter from Peter R. Geraghty, Associate Vice President (''AVP'') and Associate General Counsel (''AGC''), Nasdaq, to Katherine A. England, Assistant Director, Division of Market Regulation (''Division''), Commission (''Amendment No. 1''). In Amendment No. 1, Nasdaq added language to the proposed rule indicating that Nasdaq will append the .T modifier automatically in the circumstances described in the filing, and clarifies that the language governs the appending of the .T and .SLD modifiers in the circumstances described in the instant proposed rule change as well as in SR–NASD–2003–83. Securities Exchange Act Release No. 48120 (July 2, 2003), 68 FR 41032 (July 9, 2003).

[4] *See* November 19, 2003 letter from Peter R. Geraghty, AVP and AGC, Nasdaq, to Katherine A. England, Assistant Director, Division, Commission (''Amendment No. 2''). Amendment No. 2 does not propose any substantive modifications to the proposed rule change. It provides in a single document the proposed rule language, as modified by Amendment No. 1. For purposes of calculating the 60-day abrogation period, the Commission considers the period to have begun on November 20, 2003, the day Nasdaq filed Amendment No. 2.

[5] 15 U.S.C. 78s(b)(3)(A)(i).

[6] 17 CFR 240.19b–4(f)(1).

publishing this notice to solicit comments on the proposed rule change, as amended, from interested persons.

**I. Self-Regulatory Organization's Statement of the Terms of Substance of the Proposed Rule Change**

Nasdaq proposes to modify the Automated Confirmation Transaction Service (''ACT'') to append the .T modifier automatically to trade reports erroneously submitted to ACT without the modifier. In addition, Nasdaq is proposing to codify guidance that members must report on the following day on an ''as/of'' basis pre-open trades not reported before 9:30 a.m. Eastern Time. Finally, Nasdaq is making a non-substantive language change to NASD Rule 6420 to clarify that the term ''executed during the trading hours of the Consolidated Tape'' means between the hours of 9:30 a.m. to 4 p.m. Eastern Time. The text of the proposed rule change is below. Proposed new language is in italics; proposed deletions are in brackets.

**5430. Transaction Reporting**

*(a) When and How Transactions are Reported*

* * * * *

(4) Transaction Reporting Outside Normal Market Hours

(A)*(i)* Last sale reports of transactions in designated securities executed between 8 a.m. and 9:30 a.m. Eastern Time shall be reported within 90 seconds after execution and shall be designated as ''.T'' trades to denote their execution outside normal market hours. Additionally, last sale reports of transactions in designated securities executed between the hours of 4 p.m. and 6:30 p.m. Eastern Time shall be reported within 90 seconds after execution; trades executed and reported after 4 p.m. Eastern Time shall be designated as ''.T'' trades to denote their execution outside normal market hours. Transactions not reported within 90 seconds must include the time of execution on the trade report.

*(ii) Last sale reports of transactions in designated securities executed between 8 a.m. and 9:30 p.m. Eastern Time not reported to ACT prior to 9:30 a.m. shall be reported the following day on an ''as/of'' basis and include the time of execution. The requirements of this paragraph (ii) apply only to those trades that are required to be, or are voluntarily, reported to ACT pursuant to Rule 5430(b).*

(B) Last sale reports of transactions in designated securities executed outside the hours of 8:00 a.m. and 6:30 p.m. Eastern Time shall be reported as follows:

(i)*a.* Last sale reports of transactions executed between midnight and 8 a.m. Eastern Time shall be reported between 8 a.m. and 9:30 a.m. Eastern Time on trade date, be designated as ''.T'' trades to denote their execution outside normal market hours, and be accompanied by the time of execution.

*b. Last sale reports of transactions executed between midnight and 8 a.m. Eastern Time not reported to ACT between 8 a.m. and 9:30 a.m. Eastern Time on trade date shall be reported to ACT the following day on an ''as/of'' basis and include the time of execution. The requirements of this paragraph b. apply only to those trades that are required to be, or are voluntarily, reported to ACT pursuant to Rule 5430(b).*

(ii) Last sale reports of transactions executed between 6:30 p.m. and midnight Eastern Time shall be reported on the next business day (T+1) between 8 a.m. and 6:30 p.m. Eastern Time, be designated ''as/of'' trades to denote their execution on a prior day, and be accompanied by the time of execution.

* * * * *

*(10) Nasdaq will append the .T modifier or the .SLD modifier, as appropriate, to those reports submitted to ACT that contain the time of execution, but that do not contain the appropriate modifier.*

**6400. Reporting Transactions In Listed Securities**

**6420. Transaction Reporting**

*(a) When and How Transactions are Reported*

(1) Registered Reporting Members shall transmit through ACT, within 90 seconds after execution, last sale reports of transactions in eligible securities executed *between 9:30 a.m. and 4 p.m. Eastern Time* [during the trading hours of the Consolidated Tape] otherwise than on a national securities exchange. Transactions not reported within 90 seconds after execution shall be designated as late and such trade reports must include the time of execution. Registered Reporting Members shall also transmit through ACT, within 90 seconds after execution, last sale reports of transactions in eligible securities executed in the United States otherwise than on a national securities exchange between 4 p.m. and 6:30 p.m. Eastern Time; trades executed and reported after 4 p.m. Eastern Time shall be designated as ''.T'' trades to denote their execution outside normal market hours. Transactions not reported within 90 seconds after execution must include the time of execution on the trade report.

(2)(A) Non-Registered Reporting Members shall, within 90 seconds after execution, transmit through ACT or if ACT is unavailable due to system or transmission failure by telephone to the Nasdaq Market Operations Department, last sale reports of transactions in eligible securities executed *between 9:30 a.m. and 4 p.m. Eastern Time* [during the trading hours of the Consolidated Tape] otherwise than on a national securities exchange.

* * * * *

**6600. Over-The-Counter Equity Securities**

**6620. Transaction Reporting**

*(a) When and How Transactions are Reported*

(1) through (6) No Changes.

*(7) Nasdaq will append the .T modifier or the .SLD modifier, as appropriate, to those reports submitted to ACT that contain the time of execution, but that do not contain the appropriate modifier.*

* * * * *

**II. Self-Regulatory Organization's Statement of the Purpose of, and Statutory Basis for, the Proposed Rule Change**

In its filing with the Commission, Nasdaq included statements concerning the purpose of and basis for the proposed rule change. The text of these statements may be examined at the places specified in Item IV below. Nasdaq has prepared summaries, set forth in Sections A, B, and C below, of the most significant aspects of such statements.

*A. Self-Regulatory Organization's Statement of the Purpose of, and Statutory Basis for, the Proposed Rule Change*

1. Purpose

NASD trade reporting rules are designed to ensure timely and accurate reports of executed trades, including trades executed before and after normal trading hours. To distinguish trades executed during the pre and after hours sessions from trades executed during normal market hours (*i.e.*, between 9:30 a.m. and 4 p.m. Eastern Time), NASD members generally are required to append the .T modifier to reports of trades executed outside of normal market hours.[7] Trade reports that do not

[7] Some trades executed outside normal market hours are not reported with the .T modifier, but

include the .T modifier, or any other modifier, are assumed to be timely reports of normal market hours trades and are included in the last sale, high price, and low price calculations for a security, which calculations are designed to provide information about the current trading of a security during normal market hours.[8] Therefore, when reports of trades executed outside normal market erroneously do not include the .T modifier, the trades appear as normal market hours trades, which can distort the market because the price being reported may be significantly different from the prices in the normal market hours. These erroneously reported trades can cause confusion for members, issuers, and investors and can lead to investment decisions being made based upon inaccurate information. Automatically appending the .T modifier in these circumstances will prevent this market confusion.

In some circumstances today, ACT appends the .T modifier automatically. If a trade is executed and reported at or after 4:01:30 p.m. and up until 6:30 p.m., ACT automatically appends the .T modifier.[9] However, if the submission to ACT is a report of a trade executed between midnight and 9:30 a.m., or between 4 p.m. and 4:01:30 p.m., ACT does not append the .T modifier automatically; the member must submit the report with the .T modifier attached. As described earlier, members occasionally fail to include the .T modifier on these reports. While NASD can, and does, bring disciplinary actions against members when they do not properly report trades, the immediate result of an improperly reported trade is that potentially misleading information is disseminated. Therefore, to prevent this result, Nasdaq is proposing to modify ACT to append the .T modifier automatically to any transaction report that contains an execution time between midnight and 9:30 a.m., or between 4 p.m. and 4:01:30 p.m.[10]

To append the .T modifier automatically, ACT must be reprogrammed to include a validation parameter that compares the time of execution and the modifier field.[11] Once the validation parameter is operative, if the time of execution on a submission to ACT indicates a trade was executed between midnight and 9:30 a.m. or between 4 p.m. and 4:01:30 p.m., and the .T modifier is not included in the report, ACT will append the .T modifier automatically.[12]

The validation parameter relies on the time of execution to identify improperly reported trades and to append the .T modifier. Today, nearly all trades reported to Nasdaq include the time of execution, but some trades are still reported without this information.[13] Therefore, a small number of improperly reported trades will not be corrected automatically and thus will continue to be included in the last sale, high price, and low price calculations. However, Nasdaq staff will continue to conduct surveillance for these instances and manually correct the calculations when such errors are discovered. To eliminate the small number of incidences in which ACT cannot identify and correct improperly reported trades, Nasdaq soon will file a proposal to require the time of execution on all trade reports.

Nasdaq also is proposing to codify a requirement that members must report on the following day on an ''as/of'' basis trades executed between midnight and 9:30 a.m., but not reported before 9:30 a.m. on trade date. This guidance has been given to members in the past, but Nasdaq believes it is necessary to codify the requirement at this time so that the rules clearly state a member's obligations.[14] Nasdaq believes that requiring members to report these trades the following day is necessary to prevent members from reporting pre-open trades during the normal or after-hours sessions, which could distort the prices in these time periods due to the potential differences in prices between the pre open session and these other sessions.[15]

Finally, Nasdaq is proposing non-substantive language changes to NASD Rule 6420(a)(1) to clarify the meaning of the phrase ''executed during the trading hours of the Consolidated Tape.'' Until recently, this phrase was commonly understood to mean between the hours of 9:30 a.m. and 4 p.m. Eastern Time. However, the Consolidated Tape recently began disseminating trades executed on an exchange whose normal market hours are from 8 a.m. to 8 p.m. Thus, some members have sought clarification of their trade reporting responsibilities.

The proposed language change does not modify members' trade reporting obligations. Paragraphs (a)(1), (a)(2)(B), and (a)(3)(A) of NASD Rule 6420 specifically articulate members' reporting obligations between 4 p.m. and 6:30 p.m., and outside the hours of 9:30 a.m. and 6:30 p.m., which leads to the logical conclusion that the only time period that could be governed by the phrase ''executed during the trading hours of the Consolidated Tape'' is the period between 9:30 a.m. and 4 p.m. However, to prevent any further confusion, Nasdaq is proposing to replace the phrase at issue with the phrase ''executed between 9:30 a.m. and 4:00 p.m. Eastern Time.''

2. Statutory Basis

Nasdaq believes that the proposed rule change is consistent with the provisions of Section 15A(b)(6) of the Act,[16] which requires that NASD's rules, among other things, protect investors and public interest. Nasdaq believes the proposal to append the .T modifier automatically to trade reports submitted to ACT is consistent with this obligation because it will prevent nearly all reports of trades executed outside normal market hours from being included in the calculations designed to inform investors of the current market for a security during normal market hours. As a result, members and the public will possess more accurate information when making investment decisions. In

instead are required to be reported as ''as/of'' trades on the day following the date of execution. For example, Rule 5430(a) requires members to report a trade on an ''as/of'' basis if the trade is executed between 6:30 p.m. and midnight. A trade executed during this time period must be reported the following day as an ''as/of'' trade. The current proposal to append the .T modifier automatically does not change members ''as/of'' reporting obligations.

[8] Nasdaq's systems assume that trades reported without the .T modifier have been executed during normal market hours and are indicative of the current market for the security.

[9] *Id.* Trades executed between 6:30 p.m. and midnight must be reported the following day on an ''as/of'' basis.

[10] A trade executed at 9:30 a.m. or 4 p.m. Eastern Time is considered executed during normal market hours, and thus not reported with a .T modifier.

[11] Nasdaq intends to implement the ACT program changes on, or about, November 3, 2003.

[12] *Supra* note 8. The .T modifier will not be appended to a trade report that contains a time of execution of 9:30 a.m. or 4 p.m. Eastern Time.

[13] Today, over 99% of the trades submitted to ACT include the time of execution.

[14] The proposed requirement would apply only to those NASD members that are required to report trades to ACT or that choose to report trades to ACT, as specified in NASD Rule 5430(b).

[15] While members have been informed of this position in the past, there is no written guidance on the issue. As such, pre-open trades sometimes are reported during normal market hours. Once the current proposal is implemented, the .T modifier will be appended automatically to any report of a pre-open trade that contains the time of execution. For example, if a member attempts to report a pre-open trade during normal market hours, ACT will append the .T modifier. However, ACT also will reject the trade, because during normal market hours ACT rejects any report containing the .T modifier, even a report that contains a .T appended by ACT itself. In these circumstances, the member must resubmit the report the following day.

[16] 15 U.S.C. 78o–3(b)(6).

addition, specifically including language in NASD Rule 5420 concerning the obligation to report on the following day pre-open trades not reported before 9:30 a.m. on trade date will clarify members' trade reporting responsibilities and should facilitate proper reporting of trades. Finally, modifying the language in NASD Rule 6420 also clarifies members' trade reporting responsibilities and should facilitate proper reporting of trades.

*B. Self-Regulatory Organization's Statement on Burden on Competition*

Nasdaq does not believe that the proposed rule change will result in any burden on competition that is not necessary or appropriate in furtherance of the purposes of the Act, as amended.

*C. Self-Regulatory Organization's Statement on Comments on the Proposed Rule Change Received from Members, Participants, or Others*

Written comments were neither solicited nor received.

**III. Date of Effectiveness of the Proposed Rule Change and Timing for Commission Action**

The foregoing proposal has become effective pursuant to Section 19(b)(3)(A)(i) of the Act,[17] and Rule 19b–4(f)(1)[18] thereunder, in that it constitutes a stated policy and interpretation with respect to the meaning of an existing rule.

At any time within 60 days of the filing of the proposed rule change, the Commission may summarily abrogate such rule change if it appears to the Commission that such action is necessary or appropriate in the public interest, for the protection of investors, or otherwise in furtherance of the purposes of the Act. The programming changes that will append the .T modifier automatically are scheduled for implementation on, or about, November 3, 2003.

**IV. Solicitation of Comments**

Interested persons are invited to submit written data, views, and arguments concerning the foregoing, including whether the proposed rule change is consistent with the Act. Persons making written submissions should file six copies thereof with the Secretary, Securities and Exchange Commission, 450 Fifth Street, NW., Washington, DC 20549–0609. Copies of the submission, all subsequent amendments, all written statements with respect to the proposed rule change that are filed with the Commission, and all written communications relating to the proposed rule change between the Commission and any person, other than those that may be withheld from the public in accordance with the provisions of 5 U.S.C. 552, will be available for inspection and copying in the Commission's Public Reference Room. Copies of such filing will also be available for inspection and copying at the principal office of the NASD. All submissions should refer to file number SR–NASD–2003–154 and should be submitted by December 22, 2003.

For the Commission, by the Division of Market Regulation, pursuant to delegated authority.[19]

**Margaret H. McFarland,**

*Deputy Secretary.*

[FR Doc. 03–29800 Filed 11–28–03; 8:45 am]

**BILLING CODE 8010–01–P**

[17] 15 U.S.C. 78s(b)(3)(A)(i).

[18] 17 CFR 240.19b–4(f)(1).

[19] 17 CFR 200.30–3(a)(12).

---

## SECURITIES AND EXCHANGE COMMISSION

**[Release No. 34–48821; File No. SR–NASD–2003–134]**

## Self-Regulatory Organizations; National Association of Securities Dealers, Inc.; Order Granting Approval of Proposed Rule Change and Amendment Nos. 1 and 2 thereto by the National Association of Securities Dealers, Inc. To Amend Rule 4710 to Allow Nasdaq National Market Execution System Order Entry Firms To Automatically Internalize in SuperMontage

November 21, 2003.

On August 22, 2003, the National Association of Securities Dealers, Inc. (''NASD''), through its subsidiary, The Nasdaq Stock Market, Inc. (''Nasdaq''), filed with the Securities and Exchange Commission (''Commission''), pursuant to Section 19(b)(1) of the Securities Exchange Act of 1934 (''Act'')[1] and Rule 19b–4 thereunder,[2] a proposed rule change to amend NASD Rule 4710 to allow the Nasdaq National Market Execution System (''NNMS'' or ''SuperMontage'') to automatically match any non-directed buy and sell quotes/orders entered by an NNMS Order Entry Firm against the quotes/orders of that same NNMS Order Entry Firm on the other side of the market if such a quote/order on the other side of the market is at the best bid/offer in Nasdaq. On September 26, 2003, Nasdaq amended the proposed rule change.[3]

The proposed rule change and Amendment No. 1 were published for comment in the **Federal Register** on October 16, 2003.[4] The Commission received no comments on the proposal, as amended. On November 19, 2003, Nasdaq filed Amendment No. 2 to the proposed rule change.[5] This order approves the proposed rule change, as amended by Amendment Nos. 1 and 2.[6]

The Commission finds that the proposed rule change, as amended, is consistent with the requirements of the Act and the rules and regulations thereunder applicable to a national securities association.[7] In particular, the Commission believes that the proposed rule change, as amended, is consistent with Section 15A(b) of the Act[8] in general, and furthers the objectives of Section 15A(b)(6)[9] in particular, in that it is designed to prevent fraudulent and manipulative acts and practices, to promote just and equitable principles of trade, to foster cooperation and coordination with persons engaged in regulating, clearing, settling, processing information with respect to, and facilitating transactions in securities, to remove impediments to and perfect the mechanism of a free and open market and a national market system, and in general, to protect investors and the public interest. Specifically, the Commission finds that Nasdaq's proposal, as amended, provides NNMS Order Entry Firms with the same opportunity as other Nasdaq market participants to have their quotes/orders on opposite sides of the market match off against each other.

For the foregoing reasons, the Commission finds that the proposed

[1] 15 U.S.C. 78s(b)(1).

[2] 17 CFR 240.19b–4.

[3] *See* letter from Thomas P. Moran, Associate General Counsel, Nasdaq, to Katherine A. England, Assistant Director, Division of Market Regulation (''Division''), Commission, dated September 25, 2003 (''Amendment No. 1'').

[4] *See* Securities Exchange Act Release No. 48606 (October 8, 2003), 68 FR 59659 (''Notice'').

[5] *See* letter from Thomas P. Moran, Associate General Counsel, Nasdaq, to Katherine A. England, Assistant Director, Division, Commission, dated November 19, 2003 (''Amendment No. 2''). In Amendment No. 2, Nasdaq revised the text of the proposed rule change to correct a typographical error and to clarify that there would be no change to paragraphs (b)(1)(B)(iv)(c), (b)(1)(C) or (b)(1)(D) of NASD Rule 4710. This was a technical amendment and is not subject to notice and comment.

[6] Nasdaq represented that it would implement the proposed rule change, as amended, within 60 days after approval by the Commission. *See* Notice, *supra* note 4.

[7] In approving the proposed rule change, as amended, the Commission has considered the proposed rule's impact on efficiency, competition, and capital formation. 15 U.S.C. 78c(f).

[8] 15 U.S.C. 78*o*–3(b).

[9] 15 U.S.C. 78*o*–3(b)(6).

rule change, as amended, is consistent with the requirements of the Act and rules and regulations thereunder.

*It Is Therefore Ordered,* pursuant to Section 19(b)(2) of the Act,[10] that the proposed rule change (SR–NASD–2003–134) and Amendment Nos. 1 and 2 are approved.

For the Commission, by the Division of Market Regulation, pursuant to delegated authority.[11]

**Margaret H. McFarland,**

*Deputy Secretary.*

[FR Doc. 03–29802 Filed 11–28–03; 8:45 am]

BILLING CODE 8010–01–P

[10] 15 U.S.C. 78s(b)(2).

[11] 17 CFR 200.30–3(a)(12).

## DEPARTMENT OF STATE

**[Public Notice 4545]**

## Bureau of Political-Military Affairs: Directorate of Defense Trade Controls; Notifications to the Congress of Proposed Commercial Export Licenses

**AGENCY:** Department of State.

**ACTION:** Notice.

**SUMMARY:** Notice is hereby given that the Department of State has forwarded the attached Notifications of Proposed Export Licenses to the Congress on the dates shown on the attachments pursuant to sections 36(c) and 36(d) and in compliance with section 36(f) of the Arms Export Control Act (22 U.S.C. 2776).

**EFFECTIVE DATE:** As shown on each of the eleven letters.

**FOR FURTHER INFORMATION CONTACT:** Mr. Peter J. Berry, Director, Office of Defense Trade Controls Licensing, Directorate of Defense Trade Controls, Bureau of Political-Military Affairs, Department of State (202 663–2700).

**SUPPLEMENTARY INFORMATION:** Section 36(f) of the Arms Export Control Act mandates that notifications to the Congress pursuant to sections 36(c) and 36(d) must be published in the **Federal Register** when they are transmitted to Congress or as soon thereafter as practicable.

Dated: November 20, 2003.

**Peter J. Berry,**

*Director, Office of Defense Trade Controls Licensing, Directorate of Defense Trade Controls, Bureau of Political-Military Affairs, Department of State.*

September 25, 2003.

Dear Mr. Speaker: Pursuant to Section 36(c) of the Arms Export Control Act, I am transmitting, herewith, certification of a proposed license for the export of major defense equipment and defense services in the amount of $25,000,000 or more.

The transaction contained in the attached certification involves a notification for the export to the Hellenic Army for the acquisition and support of twelve AH–64D Apache helicopters, spare parts and associated support equipment.

The United States Government is prepared to license the export of these items having taken into account political, military, economic, human rights and arms control considerations.

More detailed information is contained in the formal certification which, though unclassified, contains business information submitted to the Department of State by the applicant, publication of which could cause competitive harm to the United States firm concerned.

Sincerely,

Paul V. Kelly,

*Assistant Secretary, Legislative Affairs.*

Enclosure: Transmittal No. DTC 102–03.

The Honorable J. Dennis Hastert, Speaker of the House of Representatives.

September 29, 2003.

Dear Mr. Speaker: Pursuant to Section 36(c) of the Arms Export Control Act, I am transmitting, herewith, certification of a proposed license for the export of defense articles or defense services sold commercially under a contract in the amount of $50,000,000 or more.

The transaction contained in the attached certification involves an upgrade of the GD–53 Radar installed on the Indigenous Defensive Fighter (IDF)/Ching Kuo aircraft for Taiwan.

The United States Government is prepared to license the export of these items having taken into account political, military, economic, human rights and arms control considerations.

More detailed information is contained in the formal certification which, though unclassified, contains business information submitted to the Department of State by the applicant, publication of which could cause competitive harm to the United States firm concerned.

Sincerely,

Paul V. Kelly,

*Assistant Secretary, Legislative Affairs.*

Enclosure: Transmittal No. DTC 088–03.

The Honorable J. Dennis Hastert, Speaker of the House of Representatives.

October 2, 2003.

Dear Mr. Speaker: Pursuant to Section 36(c) and (d) of the Arms Export Control Act, I am transmitting, herewith, certification of a proposed manufacturing license agreement for the manufacture of major defense equipment abroad and the export of defense articles or defense services sold commercially under a contract in the amount of $25,000,000 or more.

The transaction contained in the attached certification involves the export of technical data, defense hardware and hardware to support the production and manufacture of Multiple Launch Rocket Systems (MLRS) M270 Launchers, Multiple Launch Pod Assembly Trainers and Reduced Range Practice Rockets, including associated components and spare parts, for the Japanese Defense Agency.

The United States Government is prepared to license the export of these items having taken into account political, military, economic, human rights and arms control considerations.

More detailed information is contained in the formal certification which, though unclassified, contains business information submitted to the Department of State by the applicant, publication of which could cause competitive harm to the United States firm concerned.

Sincerely,

Paul V. Kelly,

*Assistant Secretary, Legislative Affairs.*

Enclosure: Transmittal No. DTC 089–03.

The Honorable J. Dennis Hastert, Speaker of the House of Representatives.

October 3, 2003.

Dear Mr. Speaker: Pursuant to Section 36(c) of the Arms Export Control Act, I am transmitting, herewith, certification of a proposed license for the export of defense articles or defense services sold commercially under a contract in the amount of $100,000,000 or more.

The transaction contained in the attached certification concerns exports of technical data and defense services for the sale, delivery and support of the ASTRA 1KR and ASTRA 1L commercial communications satellites to Luxembourg and, in the case of the former, subsequent launch from French Guiana.

The United States Government is prepared to license the export of these items having taken into account political, military, economic, human rights and arms control considerations.

More detailed information is contained in the formal certification which, though unclassified, contains business information submitted to the Department of State by the applicant, publication of which could cause competitive harm to the United States firm concerned.

Sincerely,

Paul V. Kelly,

*Assistant Secretary, Legislative Affairs.*

Enclosure: Transmittal No. DDTC 099–03.

The Honorable J. Dennis Hastert, Speaker of the House of Representatives.

October 15, 2003.

Dear Mr. Speaker: Pursuant to Section 36(c) and (d) of the Arms Export Control Act, I am transmitting, herewith, certification of a proposed license for the export of defense articles or defense services sold commercially under a contract in the amount of $100,000,000 or more.

The transaction contained in the attached certification involves the export to the United Kingdom of technical data, defense services and defense hardware for the manufacture of the MPR–9600 HF tactical radio system, which will thereafter be re-exported to Brazil, Chile, Ghana, Hungary, Jamaica, Peru, Saudi Arabia, The United Arab Emirates and the United States.

The United States Government is prepared to license the export of these items having

taken into account political, military, economic, human rights and arms control considerations.

More detailed information is contained in the formal certification which, though unclassified, contains business information submitted to the Department of State by the applicant, publication of which could cause competitive harm to the United States firm concerned.

Sincerely,

Paul V. Kelly,

*Assistant Secretary, Legislative Affairs.*

Enclosure: Transmittal No. DTC 098–03.

The Honorable J. Dennis Hastert, Speaker of the House of Representatives.

October 15, 2003.

Dear Mr. Speaker: Pursuant to Section 36(c) of the Arms Export Control Act, I am transmitting, herewith, certification of a proposed license for the export of defense articles and defense services sold under a contract in the amount of $50,000,000 or more.

The transaction contained in the attached certification involves a notification for the export to the Kuwaiti Ministry of Defense of defense articles, technical data and defense services to support installation, maintenance and training of SINCGARS RT–1702EE VHF communication systems.

The United States Government is prepared to license the export of these items having taken into account political, military, economic, human rights and arms control considerations.

More detailed information is contained in the formal certification which, though unclassified, contains business information submitted to the Department of State by the applicant, publication of which could cause competitive harm to the United States firm concerned.

Sincerely,

Paul V. Kelly,

*Assistant Secretary, Legislative Affairs.*

Enclosure: Transmittal No. DTC 100–03.

The Honorable J. Dennis Hastert, Speaker of the House of Representatives.

October 17, 2003.

Dear Mr. Speaker: Pursuant to Section 36(c) of the Arms Export Control Act, I am transmitting, herewith, certification of a proposed license for the export of defense articles or defense services sold under a contract in the amount of $100,000,000 or more.

The transaction contained in the attached certification involves the export to Japan of one 767 Tanker Transport Aircraft plus support equipment/material and the option for three additional aircraft to the Japan Defense Agency.

The United States Government is prepared to license the export of these items having taken into account political, military, economic, human rights and arms control considerations.

More detailed information is contained in the formal certification which, though unclassified, contains business information submitted to the Department of State by the applicant, publication of which could cause competitive harm to the United States firm concerned.

Sincerely,

Paul V. Kelly,

*Assistant Secretary, Legislative Affairs.*

Enclosure: Transmittal No. DTC 090–03.

The Honorable J. Dennis Hastert, Speaker of the House of Representatives.

October 17, 2003.

Dear Mr. Speaker: Pursuant to Section 36(c) of the Arms Export Control Act, I am transmitting, herewith, certification of a proposed license for the export of defense articles or defense services sold commercially under a contract in the amount of $100,000,000 or more.

The transaction contained in the attached certification involves the export of technical data and assistance in the manufacture of the AIM/RIM–7M Sparrow Missile system pursuant to the ''Memorandum of Understanding'' between the United States and the Government of Japan for end-use by the Japanese Defense Agency.

The United States Government is prepared to license the export of these items having taken into account political, military, economic, human rights and arms control considerations.

More detailed information is contained in the formal certification which, though unclassified, contains business information submitted to the Department of State by the applicant, publication of which could cause competitive harm to the United States firm concerned.

Sincerely,

Paul V. Kelly,

*Assistant Secretary, Legislative Affairs.*

Enclosure: Transmittal No. DTC 091–03.

The Honorable J. Dennis Hastert, Speaker of the House of Representatives.

October 17, 2003.

Dear Mr. Speaker: Pursuant to Section 36(c) of the Arms Export Control Act, I am transmitting, herewith, certification of a proposed manufacturing license agreement for the manufacture of significant military equipment abroad and the export of defense articles or defense services in the amount of $100,000,000 or more.

The transaction contained in the attached certification involves the export of defense services, technical data and defense articles to the United Kingdom, France and Germany to support the manufacture of various transmit/receive modules and components of the Counter Battery Radar (COBRA) program for use by the Governments of France, Germany and the United Kingdom.

The United States Government is prepared to license the export of these items having taken into account political, military, economic, human rights and arms control considerations.

More detailed information is contained in the formal certification which, though unclassified, contains business information submitted to the Department of State by the applicant, publication of which could cause competitive harm to the United States firm concerned.

Sincerely,

Paul V. Kelly,

*Assistant Secretary, Legislative Affairs.*

Enclosure: Transmittal No. DTC 095–03.

The Honorable J. Dennis Hastert, Speaker of the House of Representatives.

October 17, 2003.

Dear Mr. Speaker: Pursuant to Section 36(c) of the Arms Export Control Act, I am transmitting, herewith, certification of a proposed license for the export of defense articles or defense services sold commercially under a contract in the amount of $100,000,000 or more.

The transaction contained in the attached certification involves a renotification for the export to The Netherlands of defense articles and defense services to support the Dutch maintenance of Harpoon missile systems and canisters belonging to The Netherlands, Denmark, Germany, Greece and Portugal.

The United States Government is prepared to license the export of these items having taken into account political, military, economic, human rights and arms control considerations.

More detailed information is contained in the formal certification which, though unclassified, contains business information submitted to the Department of State by the applicant, publication of which could cause competitive harm to the United States firm concerned.

Sincerely,

*Paul V. Kelly, Assistant Secretary, Legislative Affairs.*

Enclosure: Transmittal No. DTC 096–03.

The Honorable J. Dennis Hastert, Speaker of the House of Representatives.

October 23, 2003.

Dear Mr. Speaker: Pursuant to Section 36(c) of the Arms Export Control Act, I am transmitting, herewith, certification of a proposed license for the export of defense articles and services in the amount of $50,000,000 or more.

The transaction contained in the attached certification involves the temporary export of Telstar 18 (formerly APSTAR V) Commercial Communications Satellite and its launch from international waters in the Pacific Ocean.

The United States Government is prepared to license the export of these articles and services having taken into account political, military, economic, human rights and arms control considerations.

More detailed information is contained in the formal certification which, though unclassified, contains business information submitted to the Department of State by the applicant, publication of which could cause competitive harm to the United States firm concerned.

Sincerely,

*Paul V. Kelly, Assistant Secretary, Legislative Affairs.*

Enclosure: Transmittal No. DTC 101–03.

The Honorable J. Dennis Hastert, Speaker of the House of Representatives.

[FR Doc. 03–29817 Filed 11–28–03; 8:45 am]

BILLING CODE 4710–25–P

## DEPARTMENT OF TRANSPORTATION

### Federal Aviation Administration

### Notice of Intent To Rule on Request To Release Airport Property at the Waco Regional Airport, Waco, TX

**AGENCY:** Federal Aviation Administration (FAA), DOT.

**ACTION:** Notice of request to release airport property.

**SUMMARY:** The FAA proposes to rule and invite public comment on the release of land at Waco Regional Airport under the provisions of Section 125 of the Wendell H. Ford Aviation Investment Reform Act for the 21st Century (AIR 21).

**DATES:** Comments must be received on or before December 8, 2003.

**ADDRESSES:** Comments on this application may be mailed or delivered to the FAA at the following address: Mr. J. Michael Nicely, Manager, Federal Aviation Administration, Southwest Region, Airports Division, Texas Airports Development Office, ASW–650, Fort Worth, Texas 76193–0650.

In addition, one copy of any comments submitted to the FAA must be mailed or delivered to Mr. George Johnson, Assistant City Manager, Waco, Texas, at the following address: City of Waco, P.O. Box 2570, Waco, Texas 76702.

**FOR FURTHER INFORMATION CONTACT:** Mr. Guillermo Y. Villalobos, Program Manager, Federal Aviation Administration, Texas Airports Development Office, ASW–650, 2601 Meacham Boulevard, Fort Worth, Texas 76193–0650.

The request to release property may be reviewed in person at this same location.

**SUPPLEMENTARY INFORMATION:** The FAA invites public comment on the request to release property Waco Regional Airport under the provisions of the AIR 21.

On November 7, 2003, the FAA determined that the request to release property at Waco Regional Airport submitted by the city met the procedural requirements of the Federal Aviation Regulations, part 155. The FAA may approve the request, in whole or in part, no later than December 12, 2003.

The following is a brief overview of the request:

The Waco Regional Airport requests the release of 1.8 acres of non-aeronautical airport property. The release of property will allow for the construction of a fire station. The sale is estimated to provide $27,500 to allow the purchase of riding mower equipment.

Any person may inspect the request in person at the FAA office listed above under **FOR FURTHER INFORMATION CONTACT**.

In addition, any person may, upon request, inspect the application, notice and other documents germane to the application in person at the Waco Regional Airport.

Issued in Fort Worth, Texas, on November 14, 2003.

**Naomi L. Saunders,**

*Manager, Airports Division.*

[FR Doc. 03–29846 Filed 11–28–03; 8:45 am]

BILLING CODE 4910–13–M

## DEPARTMENT OF TRANSPORTATION

### Federal Aviation Administration

### Random Drug and Alcohol Testing Percentage Rates of Covered Aviation Employees for the Period of January 1, 2004, Through December 31, 2004

**AGENCY:** Federal Aviation Administration (FAA), Department of Transportation.

**ACTION:** Notice.

**SUMMARY:** The FAA has determined that the minimum random drug and alcohol testing percentage rates for the period January 1, 2004, through December 31, 2004, will remain at 25 percent of safety-sensitive aviation employees for random drug testing and 10 percent of safety-sensitive aviation employees for random alcohol testing.

**FOR FURTHER INFORMATION CONTACT:** Mr. Arnold N. Schwartz, Office of Aerospace Medicine, Drug Abatement Division, Program Analysis Branch (AAM–810), Washington, DC 20591; telephone (202) 267–5970.

*Discussion:* The FAA Administrator set the minimum random drug testing rate for 2004 at 25 percent because the data received under the Management Information System (MIS) reporting requirements for two consecutive calendar years indicate that the positive rate is less than 1.0 percent. The FAA Administrator set the minimum alcohol testing rate for 2004 at 10 percent because the data received under the MIS reporting requirements for two consecutive calendar years indicate that the positive rate is less than 0.5 percent.

**SUPPLEMENTARY INFORMATION:** If you have questions about how the annual random drug and alcohol percentage testing rates are determined please refer to the Code of Federal Regulations title 14, part 121, appendices I and J.

**Jon L. Jordan,**

*Federal Air Surgeon.*

[FR Doc. 03–29848 Filed 11–28–03; 8:45 am]

BILLING CODE 4910–13–M

## DEPARTMENT OF TRANSPORTATION

### Federal Aviation Administration

### Notice of Intent To Rule on Application 03–05–C–00–AOO To Impose, and Impose and Use the Revenue From a Passenger Facility Charge (PFC) at Altoona-Blair County Airport, Martinsburg, PA

**AGENCY:** Federal Aviation Administration (FAA), DOT.

**ACTION:** Notice of Intent to Rule on Application, correction.

**SUMMARY:** This correction revises information from the previously published notice. In notice document 03–28826 beginning on page 65342 in the issue of Wednesday, November 19, 2003, under the **SUPPLEMENTARY INFORMATION** section, first paragraph, the substantially complete date should be October 3, 2003.

**DATES:** Comments must be received on or before December 31, 2003.

**FOR FURTHER INFORMATION CONTACT:** Lori Ledebohm, Community Planner/PFC contact, Harrisburg Airports District Office, 3905 Hartzdale Drive, Suite 508, Camp Hill, PA 17011, 717–730–2855. The application may be reviewed in person at this same location.

Issued in Camp Hill, PA on November 21, 2003.

**Lori Ledebohm,**

*PFC Coordinator, Harrisburg Airports District Office, Eastern Region.*

[FR Doc. 03–29845 Filed 11–28–03; 8:45 am]

BILLING CODE 4910–13–M

## DEPARTMENT OF TRANSPORTATION

### Federal Aviation Administration

### Notice of Passenger Facility Charge (PFC) Approvals and Disapprovals

**AGENCY:** Federal Aviation Administration (FAA), DOT.

**ACTION:** Monthly Notice of PFC Approvals and Disapprovals. In September 2003, there were 11 applications approved. Additionally, two approved amendments to previously approved applications are listed.

**SUMMARY:** The FAA publishes a monthly notice, as appropriate, of PFC approvals and disapprovals under the provisions of the Aviation Safety and Capacity Expansion Act of 1990 (Title IX of the Omnibus Budget Reconciliation Act of 1990) (Pub. L. 101–508) and Part 158 of the Federal Aviation Regulations (14 CFR part 158). This notice is published pursuant to paragraph d of § 158.29.

**PFC Applications Approved**

*Public Agency:* City of Bismarck, North Dakota.

*Application Number:* 03–04–C–00–BIS.

*Application Type:* Impose and use a PFC.

*PFC Level:* $4.50.

*Total PFC Revenue Approved in This Decision:* $5,574,555.

*Earliest Charge Effective Date:* March 1, 2004.

*Estimated Charge Expiration Date:* October 1, 2014.

*Class of Air Carriers Not Required to Collect PFC's:* Air taxis filing FAA Form 1800–31 except commuter air carriers.

*Determination:* Approved. Based on information contained in the public agency's application, the FAA has determined that the approved class accounts for less than 1 percent of the total annual enplanements at Bismarck Municipal Airport.

*Brief Description of Projects Approved for Collection and Use:*

Filing and mitigation of wetlands in northwest quadrant of the airport

Rehabilitate taxiways C and D.

Update airport layout plan.

Expand general aviation ramp.

New terminal area development project.

Plans and specifications for 2005 construction.

Taxiway C rehabilitation, construction of the corner extension, and replacement of lighting of those sections of taxiways C and B.

Plans and specifications for 2006 construction.

Purchase two plow trucks.

Master plan update.

PFC application preparation.

*Decision Date:* September 4, 2003.

**FOR FURTHER INFORMATION CONTACT:** Thomas T. Schauer, Bismarck Airports District Office, (701) 323–7380.

*Public Agency:* County of Milwaukee, Wisconsin.

*Application Number:* 03–09–U–00–MKE.

*Application Type:* Use PFC revenue.

*PFC Level:* $3.

*Total PFC Revenue to be Used in this Decision:* $1,474,500.

*Charge Effective Date:* December 1, 2011.

*Estimated Charge Expiration Date:* May 1, 2015.

*Class of Air Carriers Not Required to Collect PFC's:* No change from previous decision.

*Brief Description of Projects Approved For Use:*

Outer taxiway extension.

International arrivals building ramp expansion.

*Decision Date:* September 4, 2003.

**FOR FURTHER INFORMATION CONTACT:** Sandra E. DePottey, Minneapolis Airports District Office, (612) 713–4363.

*Public Agency:* Regional Authority of Louisville and Jefferson County, Louisville, Kentucky.

*Application Number:* 03–03–C–00–SDF.

*Application Type:* Impose and use a PFC.

*PFC Level:* $3.

*Total PFC Revenue Approved in this Decision:* $5,666,800.

*Earliest Charge Effective Date:* April 1, 2017.

*Estimated Charge Expiration Date:* June 1, 2018.

*Classes of Air Carriers Not Required to Collect PFC's:*

(1) Air taxi/commercial operators having fewer than 500 annual enplanements; (2) certified air carriers have fewer than 500 annual enplanements; and (3) certified route air carriers having fewer than 500 annual enplanements.

*Determination:* Approved. Based on information contained in the public agency's application, the FAA has determined that each approved class accounts for less than 1 percent of the total annual enplanements at Louisville International Airport.

*Brief Description of Project Approved for Collection and Use:*

Regional jet gates and holding rooms.

*Decision Date:* September 16, 2003.

**FOR FURTHER INFORMATION CONTACT:** Jerry O. Bowers, Memphis Airports District Office, (901) 544–3495, extension 221.

*Public Agency:* Metropolitan Knoxville Airport Authority, Knoxville, Tennessee.

*Application Number:* 03–07–C–00–TYS.

*Application Type:* Impose and use a PFC.

*PFC Level:* $4.50.

*Total PFC Revenue Approved in this Decision:* $4,691,627.

*Earliest Charge Effective Date:* July 1, 2022.

*Estimated Charge Expiration Date:* September 1, 2023.

*Classes of Air Carriers Not Required to Collect PFC's:* Air taxi/commercial operators filing FAA Form 1800–31.

*Determination:* Approved. Based on information contained in the public agency's application, the FAA has determined that each approved class accounts for less than 1 percent of the total annual enplanements at McGhee Tyson Airport.

*Brief Description of Project Approved for Collection and Use:* Terminal improvements program.

PFC administration and development.

*Decision Date:* September 16, 2003.

**FOR FURTHER INFORMATION CONTACT:** Cager Swauncy, Memphis Airports District Office, (901) 544–3495.

*Public Agency:* City of Atlanta, Georgia.

*Application Number:* 03–04–C–00–ATL.

*Application Type:* Impose and use a PFC.

*PFC Level:* $4.50.

*Total PFC Revenue Approved in this Decision:* $251,516,355.

*Earliest Charge Effective Date:* October 1, 2013.

*Estimated Charge Expiration Date:* February 1, 2015.

*Class of Air Carriers Not Required to Collect PFC's:* Air taxi/commercial operators enplaning revenue passengers in limited, irregular, special service air taxi commercial operations such as air ambulance services, student instruction, non-stop sightseeing flights that begin and end at the airport and are concluded within a 25-mile radius of the airport.

*Determination:* Approved. Based on information contained in the public agency's application, the FAA has determined that each approved class accounts for less than 1 percent of the total annual enplanements at Hartsfield Atlanta International Airport.

*Brief Description of Project Approved for Collection and Use.* Automated hold baggage screening project.

*Determination:* Partially approved. The City's PFC application requested 100 percent PFC funding for the project. However, after the application was submitted, the City received an Airport Improvement Program (AIP) grant to fund a portion of the project. Therefore, the approved amount was reduced by the amount of the AIP grant.

*Decision Date:* September 19, 2003.

**FOR FURTHER INFORMATION CONTACT:** Terry Washington, Atlanta Airports District Office, (404) 305–7143.

*Public Agency:* Wichita Airport Authority, Wichita, Kansas.

*Application Number:* 03–04–C–00–ICT.

*Application Type:* Impose and use a PFC.

*PFC Level:* $3.

*Total PFC Revenue Approved in this Decision:* $9,329,500.

*Earliest Charge Effective Date:* December 1, 2003.

*Estimated Charge Expiration Date:* November 1, 2007.

*Class of Air Carriers not Required to Collect PFC's:*

On demand air taxi/commercial operators.

*Determination:* Approved. Based on information contained in the public agency's application, the FAA has determined that the approved class accounts for less than 1 percent of the total annual enplanements at Wichita Mid-Continent Airport.

*Brief Description of Projects Approved for Collection and Use:*

Runway and taxiway shoulders/blast pad rehabilitation.

South air cargo apron and road construction.

North air cargo apron construction (phase IV).

Perimeter service and security road rehabilitation.

General aviation ramp reconstruction (phases I and II).

North general aviation ramp reconstruction.

North T-hangar complex pavement rehabilitation.

Pavement condition inventory.

Airport road rehabilitation.

Mid-Continent Drive bridge rehabilitation.

Security gate entrance driveway reconstruction.

Terminal loop road rehabilitation.

Runway liquid materials spreader.

Snow sweeper/blower.

Snow removal equipment.

Airfield sweeper truck replacement.

Two aircraft rescue and firefighting vehicles replacement.

Aircraft rescue and firefighting quick response vehicle.

Electric vault flood protection.

Guard stations.

Terminal restroom remodel.

Loading bridge program.

Terminal area planning study.

Master plan update.

*Brief Description of Project Partially Approved for Collection and Use:* Two disabled passenger boarding assistance devices.

*Determination:* Partially approved. The public agency did not provide substantive information regarding usage rates that would exceed the capacity of one device. Therefore, the FAA approved the purchase of only one device.

*Brief Description of Withdrawn Projects:* Mobile stair truck.

*Determination:* The public agency withdrew this project from the application by letter dated September 17, 2003.

Baggage area screening upgrade.

*Determination:* The public agency withdrew this project from the application by letter dated June 19, 2003.

*Decision Date:* September 22, 2003.

**FOR FURTHER INFORMATION CONTACT:** Lorna Sandridge, Central Region Airports Division, (816) 329–2641.

*Public Agency:* Port of Oakland, Oakland, California.

*Application Number:* 03–13–C–00–OAK.

*Application Type:* Impose and use a PFC.

*PFC Level:* $4.50.

*Total PFC Revenue Approved in this Decision:* $176,267,000.

*Earliest Charge Effective Date:* March 1, 2004.

*Estimated Charge Expiration Date:* September 1, 2010.

*Class of Air Carriers not Required to Collect PFC's:*

Nonscheduled/on-demand air carriers filing FAA Form 1800–31.

*Determination:* Approved. Based on information contained in the public agency's application, the FAA has determined that the approved class accounts for less than 1 percent of the total annual enplanements at Oakland International Airport.

*Brief Description of Projects Approved for Collection and Use At a $4.50 PFC Level:* Terminal Two building and security improvements.

Reconstruction of taxiway U.

Multi-user system equipment, phase 3.

Security checkpoint enhancements.

*Brief Description of Project Approved for Collection and Use At a $3.00 PFC Level:* Bay Area Rapid Transit connector project, phase 1.

*Decision Date:* September 23, 2003.

**FOR FURTHER INFORMATION CONTACT:** Marlys Linglsch, San Francisco Airports District Office, (650) 876–2806.

*Public Agency:* City of Atlanta, Georgia.

*Application Number:* 03–05–U–00–ATL.

*Application Type:* Use PFC revenue.

*PFC Level:* $3.00.

*Total PFC Revenue to be Used in this Decision:* $342,036,938.

*Charge Effective Date:* May 1, 2005.

*Estimated Charge Expiration Date:* February 1, 2015.

*Class of Air Carriers Not Required to Collect PFC's:* No change from previous decision.

*Brief Description of Projects Approved for Use:* Airport access roadway.

CONRAC automated people mover system.

*Decision Date:* September 24, 2003.

**FOR FURTHER INFORMATION CONTACT:** Terry Washington, Atlanta Airports District Office, (404) 305–7143.

*Public Agency:* Sanford Airport Authority, Sanford, Florida.

*Application Number:* 03–02–C–00–SFB.

*Application Type:* Impose and use a PFC.

*PFC Level:* $2.00.

*Total PFC Revenue Approved in this Decision:* $13,312,090.

*Earliest Charge Effective Date:* December 1, 2003.

*Estimated Charge Expiration Date:* July 1, 2014.

*Class of Air Carriers not Required to Collect PFC's:* None.

*Brief Description of Projects Approved for Collection and Use:* Terminal expansion project.

*Decision Date:* September 25, 2003.

**FOR FURTHER INFORMATION CONTACT:** Krystal Hudson, Orlando Airports District Office, (407) 812–6331, extension 36.

*Public Agency:* City of Eugene, Oregon.

*Application Number:* 03–05–C–00–EUG.

*Application Type:* Impose and use a PFC.

*PFC Level:* $4.50.

*Total PFC Revenue Approved in this Decision:* $2,032,935.

*Earliest Charge Effective Date:* January 1, 2004.

*Estimated Charge Expiration Date:* November 1, 2005.

*Classes of Air Carriers not Required to Collect PFC's:*

(1) Operations by air taxi/commercial operators utilizing aircraft having a maximum seating capacity of less than 20 passengers when enplaneing revenue passengers in a limited, irregular/non-scheduled, or special service manner; and (2) operations by air taxi/commercial operators without regard to seating capacity, for revenue passengers transported for student instruction, nonstop sightseeing flights that begin and end at Eugene Airport and are conducted within a 25 mile radius of the airport, firefighting charters, ferry or training flights, air ambulence/medivact flights; and aerial photography on survey flights.

*Determination:* Approved. Based on information contained in the public agency's application, the FAA has determined that each approved class accounts for less than 1 percent of the total annual enplanements at Eugene Airport Mahlon Sweet Field.

*Brief Description of Projects Approved for Collection and Use:* Parallel runway 16L/34R construction.

Parallel runway 16L/34R—ramp construction.

*Decision Date:* September 26, 2003.

**FOR FURTHER INFORMATION CONTACT:** Suzanne Lee-Pang, Seattle Airports District Office, (425) 227–2654.

*Public Agency:* Lee County Airport Authority, Fort Myers, Florida.

*Application Number:* 03–05–C–00–RSW.

*Application Type:* Impose and use a PFC.

*PFC Level:* $4.50.

*Total PFC Revenue Approved in This Decision:* $104,801,531.

*Earliest Charge Effective Date:* March 1, 2011.

*Estimated Charge Expiration Date:* April 1, 2017.

*Classes of Air Carriers Not Required to Collect PFC's:* Air taxi/commercial operators.

*Determination:* Approved. Based on information contained in the public agency's application, the FAA has determined that the approved class accounts for less than 1 percent of the total annual enplanements at Southwest Florida International Airport.

*Brief Description of Projects Approved for Collection and Use:* Design and construction of new midfield terminal.

Runway 10/28 rehabilitation.,

Americans with Disabilities act improvements.

Security upgrades.

Land acquisition.

Snow removal equipment.

*Decision Date:* September 30, 2003.

**FOR FURTHER INFORMATION CONTACT:** Juan C. Brown, Orlando Airports District Office, (407) 812–6331, extension 18.

AMENDMENTS TO PFC APPROVALS

| Amendment No., city, state | Amendment approved date | Original approved net PFC revenue | Amended approved net PFC revenue | Original estimated charge exp. date | Amended estimated charge exp. date |
|---|---|---|---|---|---|
| 01–03–C–01–BIS Bismarck, ND. | 09/04/03 | $925,522 | $1,001,481 | 12/01/03 | 03/01/04 |
| 00–01–C–01–SFB Sanford, FL. | 09/16/03 | 1,100,332 | 1,192,352 | 10/01/16 | 12/01/03 |

Issued in Washington, DC, on November 21, 2003.

**Frank San Martin,**

*Acting Manager, Financial Analysis and Passenger Facility Branch.*

[FR Doc. 03–29847 Filed 11–28–03; 8:45 am]

**BILLING CODE 4910–13–M**

## DEPARTMENT OF TRANSPORTATION

### Federal Highway Administration

### Environmental Impact Statement: Kootenai and Bonner Counties, Idaho

**AGENCY:** Federal Highway Administration (FHWA), DOT.

**ACTION:** Notice of intent.

**SUMMARY:** The FHWA is issuing this notice to advise the public that an Environmental Impact Statement (EIS) will be prepared for a proposed highway project in Kootenai and Bonner Counties, Idaho.

**FOR FURTHER INFORMATION CONTACT:** Russell L. Jorgenson, Field Operations Engineer, Federal Highway Administration, 3050 Lakeharbor Lane, Suite 126, Boise, Idaho 83703, telephone: (208) 334–1843; or L. David Karsann, Senior Environmental Planner, Idaho Transportation Department, 600 West Prairie Ave., Coeur d'Alene, Idaho 82815, telephone: (208) 772–1232.

**SUPPLEMENTARY INFORMATION:** The FHWA, in cooperation with the Idaho Transportation Department (ITD), will prepare an EIS on a proposal to improve U.S. Highway 95 in Kootenai and Bonner Counties, Idaho. The EIS will evaluate improvements to US 95 between State Highway 53 two miles north of the City of Hayden (MP 438.24) and Sagle (MP 469.75), a distance of about 31.5 miles.

Improvements to the corridor are considered necessary to provide for the existing and projected traffic demand, and to improve safety conditions. A full range of alternatives will be evaluated in the EIS.

Letters describing the proposed action and soliciting comments will be sent to appropriate Federal, State, and local agencies, and to private organizations and citizens who have previously expressed or are known to have interest in this proposal. Scoping will begin with the publication of the Notice of Intent. As part of the scoping process, public information meetings will be held in addition to public hearings. Public notice will be given of the time and place of the meetings and hearings. The Draft EIS will be available for public agency review and comment prior to the public hearing.

To ensure that the full range of issues related to this proposed action are addressed and all significant issues are identified, comments and suggestions are invited from all interested parties. Comments or questions concerning this proposed action and the EIS should be directed to the FHWA or ITD at the addresses provided above.

(Catalog of Federal Domestic Assistance Program Number 20.205, Highway Planning and Construction. The regulations implementing Executive Order 12372 regarding intergovernmental consultation on Federal programs and activities apply to this program.)

**Authority:** 23 U.S.C. 315; 23 CFR 771.123; 49 CFR 1.48.

Dated: November 24, 2003.

**Stephen A. Moreno,**

*Division Administrator, Federal Highway Administration, Boise, Idaho.*

[FR Doc. 03–29789 Filed 11–28–03; 8:45 am]

**BILLING CODE 4910–22–M**

## DEPARTMENT OF TRANSPORTATION

### Federal Motor Carrier Safety Administration

### Office of Research and Technology Forum

**AGENCY:** Federal Motor Carrier Safety Administration (FMCSA), DOT.

**ACTION:** Notice of meeting/forum.

**SUMMARY:** This notice invites interested persons to participate in a forum sponsored by the FMCSA Office of Research and Technology in conjunction with the 83rd Annual Meeting of the Transportation Research Board. The purpose of the forum is to provide insights into building public-private partnerships that involve government, academia and industry through panel discussions and presentations highlighting such collaborations. On Panel I, attendees will learn about some recently completed and current research being managed by FMCSA staff in the areas of the Commercial Vehicle Information Systems & Networks, electronic on-board recorders, crash causation, CMV medical qualifications and testing, and the National Commercial Vehicle Roadside Testing Lab. On Panel II, industry representatives will present firsthand accounts of how their

organizations have worked with FMCSA to develop and promote research and technology designed to achieve mutual commercial motor vehicle safety goals and objectives. Time will be allotted for questions and answers following each panel, and dialogue between attendees and presenters is encouraged.

*Where and When:* Marriott Wardman Park Hotel, the Delaware Room, 2660 Woodley Road, NW., Washington, DC 20008, on Sunday, January 11, 2004, from 8 a.m. to 1 p.m.

*Registration:* This forum is listed as a session in the TRB Annual Meeting Program and all registrants are welcome to attend. TRB registration is not required to attend the forum and it is open to the public at no cost. To register for the TRB Annual Meeting, visit *www.trb.org.* To attend the forum only, send an e-mail to: *R&TPartnerships@fmcsa.dot.gov.*

**FOR FURTHER INFORMATION CONTACT:** Mr. Albert Alvarez, Office of Research and Technology (MC–RTR), Federal Motor Carrier Safety Administration, 400 Virginia Avenue, SW., Washington, DC 20024; telephone (202) 385–2387 or e-mail *albert.alvarez@fmcsa.dot.gov.* Or, contact Mike Lange in the same office at (202) 385–2373 or e-mail *michael.lang@fmcsa.dot.gov.* Office hours are from 8 a.m. to 4:30 p.m., E.S.T., Monday through Friday, except Federal holidays.

**SUPPLEMENTARY INFORMATION:** Forum attendees will receive an Information Packet on current programs the Office of Research and Technology is working on. While the forum will be open to the public, it will be limited to the space available. Individuals requiring special needs/accommodations (sign, reader, etc.), please call Joanice Cole at (202) 334–2287, or e-mail *jcole@nas.edu.*

Issued on: November 20, 2003.

**Annette M. Sandberg,**

*Administration.*

[FR Doc. 03–29851 Filed 11–28–03; 8:45 am]

**BILLING CODE 4910–EX–P**

## DEPARTMENT OF TRANSPORTATION

## Federal Railroad Administration

**[Docket No. FRA–2000–7257; Notice No. 31]**

## Railroad Safety Advisory Committee (''RSAC''); Working Group Activity Update

**AGENCY:** Federal Railroad Administration (FRA), Department of Transportation (DOT).

**ACTION:** Announcement of Railroad Safety Advisory Committee (RSAC) Working Group Activities.

**SUMMARY:** FRA is updating its announcement of RSAC's working group activities to reflect their current status. For additional details on completed activities see prior working group activity notices (68 FR 25677).

**FOR FURTHER INFORMATION CONTACT:** Trish Butera or Lydia Leeds, RSAC Coordinators, FRA, 1120 Vermont Avenue, NW., Mailstop 25, Washington, DC 20590, (202) 493–6213 or Grady Cothen, Deputy Associate Administrator for Safety Standards and Program Development, FRA, 1120 Vermont Avenue, NW., Mailstop 25, Washington, DC 20590, (202) 493–6302.

**SUPPLEMENTARY INFORMATION:** This notice serves to update FRA's last announcement of working group activities and status reports of September 18, 2003, (68 FR 54777). The twenty-first full Committee meeting was held May 20, 2003. The twenty-second meeting is scheduled for December 2, 2003, at the Washington Plaza Hotel.

Since its first meeting in April of 1996, the RSAC has accepted eighteen tasks. Status for each of the tasks is provided below:

*Open Tasks*

*Task 96–4*—Reviewing the appropriateness of the agency's current policy regarding the applicability of existing and proposed regulations to tourist, excursion, scenic, and historic railroads. This Task was accepted on April 2, 1996, and a Working Group was established. The Working Group monitored the steam locomotive regulations task. Planned future activities involve the review of other regulations for possible adaptation to the safety needs of tourist and historic railroads. Contact: Grady Cothen (202) 493–6302.

*Task 97–1*—Developing crashworthiness specifications to promote the integrity of the locomotive cab in accidents resulting from collisions. This Task was accepted on June 24, 1997. A Task Force on engineering issues was established by the Working Group on Locomotive Crashworthiness to review collision history and design options and additional research was commissioned. The Working Group reviewed results of the research and is drafting performance-based standards for freight and passenger locomotives to present to the RSAC for consideration. An accident review task force has evaluated the potential effectiveness of suggested improvements. The Working Group reached tentative agreement for a proposed rule. The NPRM and Regulatory Impact Analysis have been revised to reflect the changes. The next step is for the Working Group to complete its review of the NPRM. Contact: Charles Bielitz (202) 493–6314.

*Task 97–2*—Evaluating the extent to which environmental, sanitary, and other working conditions in locomotive cabs affect the crew's health and the safe operation of locomotives, proposing standards where appropriate. This Task was accepted June 24, 1997.

**(Sanitation) (Completed)**

(Noise exposure) The Cab Working Conditions Working Group met most recently in Chicago, November 12–14, 2002. A tentative consensus was reached on the draft rule text. The Working Group approved the NPRM. On June 27, 2003, the full RSAC gave consensus by ballot on NPRM. FRA is completing review of the Regulatory Impact Analysis. The next step is to publish the NPRM in the **Federal Register**.

**(Cab Temperature) (Completed)**

**Note:** Additional related topics may be further considered by the Working Group in the future, including effect of vibrations and crew emergency egress. Contact: Jeffrey Horn (202) 493–6283.

*Task 97–3*—Developing event recorder data survivability standards. This Task was accepted on June 24, 1997. On November 12, 2003, the RSAC gave consensus by ballot on the NPRM. The next step is to publish the NPRM in the **Federal Register**.

Contact: Edward Pritchard (202) 493–6247.

*Task 97–4* and *Task 97–5*—Defining Positive Train Control (PTC) functionalities, describing available technologies, evaluating costs and benefits of potential systems, and considering implementation opportunities and challenges, including demonstration and deployment.

*Task 97–6*—Revising various regulations to address the safety implications of processor-based signal and train control technologies, including communications-based operating systems. These three tasks were accepted on September 30, 1997, and assigned to a single Working Group.

(Report to the Administrator) A Data and Implementation Task Force, formed to address issues such as assessment of costs and benefits and technical readiness, completed a report on the future of PTC systems. The report was accepted as RSAC's Report to the Administrator at the September 8, 1999,

meeting. FRA enclosed the report with a letter Report to Congress signed May 17, 2000.

(Report to Congress) The Appropriations Conferees included in their report on the FY 2003 DOT Appropriations Act a requirement for a second review of the costs and benefits of PTC as a part of the 2005 budget submission to Congress. FRA will request the RSAC to comment on the draft report when available.

(Regulatory development) The Standards Task Force, formed to develop PTC standards assisted in developing draft recommendations for performance-based standards for processor-based signal and train control systems. The NPRM was approved by consensus at the full RSAC meeting held on September 14, 2000. The NPRM was published in the **Federal Register** on August 10, 2001. A meeting of the Working Group was held December 4–6, 2001, in San Antonio, Texas to formulate recommendations for resolution of issues raised in the public comments. Agreement was reached on most issues raised in the comments. A meeting was held May 14–15, 2002, in Colorado Springs, Colorado at which the Working Group approved creation of teams to further explore issues related to the ''base case'' issue. Briefing of the full RSAC on the ''base case'' issue was completed on May 29, 2002, and consultations continued within the working group. The full Working Group met October 22–23, 2002, and again March 4–6, 2003. Resolution of the remaining issues was considered by the Working Group at the July 8–9, 2003, meeting. The Working Group achieved consensus on recommendations for resolution of a portion of the issues in the proceeding. The full Committee considered the Working Group recommendations by mail ballots scheduled for return on August 14, 2003; however, a majority of the members voting did not concur. FRA has proceeded with preparation of a final rule, which is currently being reviewed in the Executive Branch.

(Other program development activities) Task forces on Human Factors and the Axiomatic Safety—Critical Assessment Process (risk assessment) continue to work toward development of a risk assessment toolkit, and the Working Group continues to meet to monitor the implementation of PTC and related projects. Contact: Grady Cothen (202) 493–6302.

*Task 00–1*—Determining the need to amend regulations protecting persons who work on, under, or between rolling equipment and persons applying, removing or inspecting rear end marking devices (Blue Signal Protection). The Working Group held its first meeting on October 16–18, 2000, and six meetings have been held since then. The Working Group significantly narrowed the issues, but did not reach full consensus on recommendations for regulation action. The status of this rulemaking will be addressed at the December 2, 2003, RSAC meeting. Contact: Doug Taylor (202) 493–6255.

*Task 03–01* Passenger Safety. This Task was accepted May 20, 2003, and a Working Group was established. The Working Group held its first meeting September 9–10, 2003. At the second meeting held November 6–7, 2003, four task forces were established and specific issues were committed to each task force for resolution. Task forces are charged with reporting to the working group regarding need, practicability, and milestones with respect to each issue item.

*Completed Tasks*

*Task 96–1*—(Completed) Revising the Freight Power Brake Regulations.

*Task 96–2*—(Completed) Reviewing and recommending revisions to the Track Safety Standards (49 CFR Part 213).

*Task 96–3*—(Completed) Reviewing and recommending revisions to the Radio Standards and Procedures (49 CFR Part 220).

*Task 96–5*—(Completed) Reviewing and recommending revisions to Steam Locomotive Inspection Standards (49 CFR Part 230).

*Task 96–6*—(Completed) Reviewing and recommending revisions to miscellaneous aspects of the regulations addressing Locomotive Engineer Certification (49 CFR Part 240).

*Task 96–7*—(Completed) Developing Roadway Maintenance Machines (On-Track Equipment) Safety Standards.

*Task 96–8*—(Completed) This Planning *Task evaluated the need for action responsive to recommendations contained in a report to Congress entitled, Locomotive Crashworthiness & Working Conditions.*

*Task 97–7*—(Completed) Determining damages qualifying an event as a reportable train accident.

*Task 01–1*—(Completed) Developing conformity of FRA's regulations for accident/incident reporting (49 CFR Part 225) to revised regulations of the Occupational Safety and Health Administration (OSHA), U.S. Department of Labor, and to make appropriate revisions to the *FRA Guide for Preparing Accident/Incident Reports* (Reporting Guide).

Please refer to the notice published in the **Federal Register** on March 11, 1996, (61 FR 9740) for more information about the RSAC.

Issued in Washington, DC on November 25, 2003.

**George A. Gavalla,**

*Associate Administrator for Safety.*

[FR Doc. 03–29849 Filed 11–28–03; 8:45 am]

BILLING CODE 4910–06–P

---

## DEPARTMENT OF TRANSPORTATION

### National Highway Traffic Safety Administration

### Innovative Grants To Support Increased Safety Belt Use Rates

**AGENCY:** National Highway Traffic Safety Administration (NHTSA), Department of Transportation (DOT).

**ACTION:** Announcement of grants to support innovative and effective projects designed to increase safety belt use rates.

**SUMMARY:** NHTSA announces the fifth year of a grant program under Section 1403 of the Transportation Equity Act for the 21st Century (TEA–21) to provide funding to States for innovative projects to increase safety belt use rates. Consistent with prior years, the goal of this program is to increase safety belt use rates across the Nation in order to reduce the deaths, injuries, and societal costs that result from motor vehicle crashes. Award of funds will be based on criteria specified in this Notice. This Notice solicits applications from the States, the District of Columbia and Puerto Rico, through their Governors' Representatives for Highway Safety, for funds to be made available in fiscal year (FY) 2004. Detailed application instructions are provided in the Application Procedure and the Application Contents and Grant Criteria sections of this Notice.

**DATES:** Applications must be received by the appropriate NHTSA Regional Office, on or before January 14, 2004.

**ADDRESSES:** Each State must submit its application to the appropriate NHTSA Regional Office, to the attention of the Regional Administrator, on or before January 14, 2004. Addresses of the ten Regional Offices are listed in Appendix A.

**FOR FURTHER INFORMATION CONTACT:** Questions relating to this grant program should be directed to Janice Hartwill-Miller, Occupant Protection Division (NTI–112), Office of Impaired Driving and Occupant Protection, NHTSA, 400 Seventh Street, SW., Room 5118, Washington, DC 20590, by e-mail at *jhartwill-miller@nhtsa.dot.gov,* or by phone at (202) 366–2684. For legal

issues, contact John Donaldson, Office of Chief Counsel, NCC–113, NHTSA, 400 Seventh Street, SW., Room 5219, Washington, DC 20590, by phone at (202) 366–1834. Interested applicants are advised that no separate application package exists beyond the contents of this announcement.

**SUPPLEMENTARY INFORMATION:**

## Background

The Transportation Equity Act for the 21st Century (TEA–21), Pub. L. 105–178, was signed into law on June 9, 1998. Section 1403 of TEA–21 contains a safety incentive grant program based on safety belt usage rates in the States. Under this program, funds are allocated each fiscal year to States that exceed the national average safety belt use rate or that improve their State safety belt use rate, based on certain required determinations and findings. Section 1403 provides that any funds remaining unallocated in a fiscal year after determinations and findings related to safety belt use rates have been made are to be used to ''make allocations to States to carry out innovative projects to promote increased safety belt use rates.'' The authorization for this program under TEA–21 expired at the end of fiscal year 2003. However, on September 30, 2003, Congress enacted the Surface Transportation Extension Act of 2003, Pub. L. 108–88, extending the authorization for the program for an additional five months. As of the date of publication of this Notice, appropriations for the full five month period were not in place. Today's Notice solicits applications for funds that are expected to become available in FY 2004 under this extension provision.

TEA–21 imposes several requirements under the innovative projects funding provision. Specifically, to be eligible to receive an allocation, a State must develop a plan for innovative projects to promote increased safety belt use rates statewide and submit the plan to the Secretary of Transportation (by delegation, to NHTSA). NHTSA was directed to establish criteria governing the selection of State plans for allocations of grant funds and was further directed to ''ensure, to the maximum extent practicable, demographic and geographic diversity and a diversity of safety belt use rates among the States selected for allocations.'' Finally, subject to the availability of funds, TEA–21 provides that the amount of each grant under a State plan should not be less than $100,000.

In the following sections, the agency describes the application and award procedures for receipt of funds under this program for FY 2004. This description includes the requirements regarding contents of a State's proposal and the elements, procedures and criteria the agency will use to determine which proposals are eligible for award and the amount of each award. Applicants should note that awards are subject to the availability of funds, and Congress has not yet appropriated sufficient funds for this program.

These application and award procedures are built upon the experience of the past several years. They are designed to make the process as streamlined as possible, and at the same time, to ensure that programs with the maximum potential for impact receive adequate funding to significantly increase safety belt usage. This year, the Application Procedure section further simplifies what States are required to address under the Applications Contents and Grants Criteria Section. The award criteria have been designed to support States proposing to carry out intensified, statewide programs of high-visibility enforcement of their safety belt laws. The Application Procedure has been especially streamlined for States that followed the high-visibility enforcement model in May 2003, and converted at least 1 percent of their non-belt users to users. Experience from many States has shown that such programs can substantially increase safety belt use rates in a very short period of time and such gains can be sustained.

## Objective of This Grant Program

The objective of this grant program is to increase statewide safety belt use rates by supporting strategies and activities with the greatest potential for impact.

To be considered for an award under this program in FY 2004, the State must conduct a program of high-visibility enforcement of its safety belt law. Further, the proposed program must focus on the national Buckle Up America/Click It or Ticket mobilization, spanning the period from Monday, May 10 through Sunday, June 6, 2004. The State's participation in that 4-week mobilization must include all of the following elements:

- Earned media (press events, news conferences, etc.) spanning the entire 4-week period;
- A paid media campaign, from Monday, May 17 through Sunday, May 30, featuring broadcast advertisements delivering the Click It or Ticket message, or other equally clear enforcement focused message that NHTSA explicitly approves;
- Intensified enforcement activities (*e.g.*, safety belt checkpoints, enforcement zones, saturation patrols) spanning the period from Monday, May 24 through Sunday, June 6, and involving the participation of law enforcement agencies serving at least 85 percent of the State's population.
- Pre- and post-mobilization observational surveys of safety belt use.

The post-mobilization observational survey must be a full statewide survey conforming to NHTSA's Uniform Criteria for State Observational Surveys of Seat Belt Use, (23 CFR part 1340) (the ''Uniform Criteria''), for which data collection must begin on or shortly after Monday, June 7 and must conclude no later than July 11, 2004. The pre-mobilization observational survey may be either a full statewide survey or a sub-sample survey derived from the full survey design. Data collection for the pre-mobilization observational survey must begin no earlier than April 1 and conclude no later than May 9, 2004.

Unlike previous years, NHTSA does not intend to sponsor a national safety belt mobilization in November 2004.

NHTSA will consider awarding a Section 157 Innovative grant to a State whose application consists solely of a proposal to participate in the May 10–June 6 national mobilization as detailed above. However, States are strongly encouraged to include a proposal for an additional program of high-visibility enforcement of the safety belt law during FY 2004, subsequent to the May 10–June 6 mobilization. NHTSA intends to permit considerable latitude to the States in choosing the timing and nature of any additional high-visibility enforcement program conducted subsequent to the May 10–June 6 mobilization. Non-exhaustive examples of the kinds of additional high-visibility enforcement programs that NHTSA likely would approve in a State plan include:

- A mobilization (*e.g.*, around Labor Day, 2004), similar to the May 10–June 6 mobilization.
- Two one-week periods of stepped up safety belt enforcement, separated by some interval of time (*e.g.*, one in mid-July, another in late August).
- A sustained enforcement program, spanning two consecutive months (*e.g.*, mid-July through mid-September); this could be achieved, for example, by scheduling each participating law enforcement agency to conduct one or two weeks of stepped up enforcement during that interval, and rotating the schedule so that in any given week the program would be underway in significant portions of the State.

If a State elects to propose an additional high-visibility enforcement program in FY 2004 subsequent to the May 10–June 6 mobilization, NHTSA would consider a program that is integrated with some other traffic safety enforcement initiative (*e.g.*, impaired driving). However, Section 157 Innovative grant funds may be used only to support the safety belt elements of an integrated campaign.

In order to be considered for funding, a proposed additional high-visibility enforcement program must at least have a strong earned media component to deliver the Click It or Ticket message, or other equally clear enforcement focused message that NHTSA explicitly approves. NHTSA recommends that States also include a paid media component, but will consider funding additional high-visibility enforcement programs that are not supported by paid media.

Apart from the required pre- and post-mobilization observational surveys of safety belt use (preceding and following the May 10–June 6 mobilization), no evaluation activities are required of the States for the FY 2004 Section 157 Innovative grants. However, NHTSA will consider funding additional evaluation activities (*e.g.*, telephone or Motor Vehicle Department surveys of public attitudes and awareness), should States propose them.

A State submitting a proposal designed to increase safety belt use in only a limited number of jurisdictions within the State; or a proposal that lacks a commitment to the May 10–June 6, 2004 mobilization; or a proposal that lacks paid media support for that mobilization; or a proposal to employ a message other than Click It or Ticket or some equally clear enforcement focused message that NHTSA explicitly approves; or a proposal that lacks a commitment to conducting a full, statewide, Uniform-Criteria-compliant observational survey of safety belt use following the May 10–June 6, 2004 mobilization; or a proposal that lacks a commitment to conducting either a full statewide observational survey or a sub-sample survey derived from the full survey design prior to that mobilization will *not* be eligible for a grant award.

As a condition of award, States must agree to provide the results of their own pre- and post-mobilization observational surveys to NHTSA, within the prescribed deadlines, to facilitate NHTSA's overall evaluation of the effectiveness of the FY 2004 grant program. NHTSA will share the results of its telephone surveys with the States. These data will provide information regarding the extent to which the public was aware of the enforcement, PI&E, and outreach efforts in each State, thus assisting statewide evaluation efforts. States may also propose to conduct additional evaluation activities (*e.g.* conducting motorist surveys at DMVs or licensing centers). NHTSA will aid the States in such efforts wherever possible, such as by tabulating and analyzing the results of motorist/DMV surveys.

**Award of Funds and Funding Levels**

In FY 2004, the decision to award a Section 157 Innovative Grant to a State will be based on the determination that the activities planned have potential to make a significant impact on safety belt use.

To maximize the potential for impact, it is anticipated that no State will receive a grant award of less than $250,000, subject to the availability of funds. This $250,000 minimum was derived based on experience gained by the agency over the past 4 years of this Innovative Grant program. It reflects the agency's estimate of the minimum resources needed, in smaller or less populated States, to implement an effective statewide safety belt program that includes intensive enforcement and media, appropriate outreach, and pre- and post-mobilization observational surveys.

We expect that some States will receive more than this minimum amount. When developing their proposals, States are encouraged to consider their level of effort and budget in FY 2003.

To the extent that the agency determines that activities proposed in a State's plan do not have substantial impact potential, these activities will not be recommended for funding.

**Allowable Uses of Federal Funds**

In FY 2004, the Section 157 Innovative Grants funds will be tracked in a fashion similar to other highway safety grants through the Grant Tracking System. Funds provided to a State under this grant program shall be used to carry out the approved activities described in the State's application for which the grant is awarded. In addition, allowable uses of Federal funds shall be governed by 49 CFR Part 18—Department of Transportation Uniform Administrative Requirements for Grants and Cooperative Agreements to State and Local Governments and the cost principles contained in OMB Circular A–87.

**Eligibility Requirements**

Only the 50 States, the District of Columbia and Puerto Rico, through their Governors' Representatives for Highway Safety, will be eligible to receive funding under this grant program.

**Application Procedures**

Each applicant must submit one original and two copies of its application to the appropriate NHTSA Regional Office (see Appendix A), to the attention of the Regional Administrator. Applications must be typed on one side of the page only and adhere to the requirements of the Application Contents and Grant Criteria Section below. Appendix B provides checklists to facilitate the preparation of the proposals. Only applications submitted by a State's Governor's Representative for Highway Safety *and received* in the appropriate NHTSA Regional Office on or before January 14, 2004 will be considered.

**Application Options**

In order to streamline this year's application and award process, simplified application options are available to most States.

*Option A (Replication):* Any State that received a Section 157 Innovative grant in FY 2003 *and* that converted at least one percent of its 2002 non-belt users into belt users in 2003 (based upon observational surveys conforming to the Uniform Criteria) may submit in lieu of a full application, the information required under the Application Contents and Grant Criteria section, Application Option A—Replication. Option A is available only to the 36 States listed in Appendix C, Option A.

*Option B (Enhancement):* Any State that received a Section 157 Innovative grant in FY 2003 may submit an application limited to the information required under the Application Contents and Grant Criteria section, Application Option B—Enhancement. Option B is available to 45 States, as indicated in Appendix C, Option B. Please note, however, that Option B primarily is intended for the nine States specifically named in Appendix C, Option B. Those States followed the high-visibility enforcement model in May 2003, but did not convert at least 1 percent of their non-belt users to users. Those nine States need to enhance their activities for the May 2004 mobilization to produce greater positive impact.

*Option C (Complete Application):* Any State may submit a complete application, including an Introduction, a detailed Program Plan, and all required checklists, certifications and budgetary information, as specified under the Application Contents and Grant Criteria section, Application Option C—Complete Application.

Please note that any State that *did not* receive a Section 157 Innovative grant in FY 2003 must follow Option C.

**Application Contents and Grant Criteria**

*1. Application Option A—Replication*

A State that applies for a Section 157 Innovative grant in FY 2004 under Application Option A shall submit an application consisting of the following:

- The completed Option A checklist (in Appendix B), with a checkmark in the ''check if included'' column for every item.
- The Appendix C certifications, signed by the Governor's Representative for Highway Safety, with a checkmark on item (A) and on each of the items (i) through (v), and (vii) and (viii).
- (Optional) Detailed plans (if any) for conducting *additional* high-visibility enforcement of the State's safety belt law in fiscal year 2004, subsequent to the May 2004 mobilization.
- (Optional) Any evaluation activities the State proposes to carry out, beyond the observational surveys conducted before and after the May 2004 mobilization.
- The proposed budget for the State's FY 2004 Section 157 Innovative grant, using the Appendix D format.

*2. Application Option B—Enhancement*

A State that applies for a Section 157 Innovative grant in FY 2004 under Application Option B shall submit an application consisting of the following:

- The completed Option B checklist (in Appendix B), with a checkmark in the ''check if included'' column for every item.
- The Appendix C certifications, signed by the Governor's Representative for Highway Safety, with a checkmark on item (B) and on each of the items (i) through (v) and (vii) and (viii).
- Descriptions of enhancements to the State's May 2003 mobilization activities that the State plans to implement for the May 2004 mobilization.
- (Optional) Detailed plans (if any) for conducting *additional* high-visibility enforcement of the State's safety belt law in fiscal year 2004, subsequent to the May 2004 mobilization.
- (Optional) Any evaluation activities the State proposes to carry out, beyond the observational surveys conducted before and after the May 2004 mobilization.
- The proposed budget for the State's FY 2004 Section 157 Innovative grant, using the Appendix D format.

*3. Application Option C—Complete*

A State that applies for a Section 157 Innovative grant in FY 2004 under Application Option C shall submit a complete application, consisting of:

- The completed Option C checklist (in Appendix B), with a checkmark in the ''check if included'' column for every item.
- The Appendix C certifications, signed by the Governor's Representative for Highway Safety, with a checkmark on item (C) and on each of the items (i) through (v) and (vii) and (viii).
- An Introduction, discussing the State's current safety belt use rate and recent trends; the goal for increasing use rate in 2004; the State's geographic and demographic population distribution and any other unique characteristics relevant to the State's plans to increase belt use (*e.g.*, ethnic sub-populations, variations in use rate by vehicle type); and any available information pertinent to recent progress or lack of progress in increasing belt use.
- A detailed Program Plan for the May 2004 mobilization, describing how the State intends to recruit law enforcement participation in the mobilization and how much of the State's population will be served by participating law enforcement agencies; how the mobilization will be publicized; the messaging (*e.g.*, Click It or Ticket) the State intends to employ in the publicity; and the kinds of enforcement activities (*e.g.*, checkpoints, saturation patrols) it plans to employ for the mobilization.
- (Optional) Detailed plans (if any) for conducting *additional* high-visibility enforcement of the State's safety belt law in fiscal year 2004, subsequent to the May 2004 mobilization.
- (Optional) Any evaluation activities the State proposes to carry out, beyond the observational surveys conducted before and after the May 2004 mobilization.
- The proposed budget for the State's FY 2004 Section 157 Innovative grant, using the Appendix D format.

*4. Budget:* Under all three options, the Budget section of the State's application must include information on Section 157 Innovative grant funds remaining from prior fiscal years, and how much of those prior year funds will be allocated to support the FY 2004 program. States are reminded that all remaining FY 2001 Section 157 Innovative funds must be obligated by the end of FY 2004 (September 30, 2004).

*Reporting Requirements and Deliverables:* Each grant recipient will be responsible for providing the following reports:

*1. Quarterly Reports*—The quarterly reports should include a summary of enforcement and other activities and accomplishments for the preceeding period, significant problems encountered or anticipated, a brief itemization of expenditures made during the 3-month reporting period, and proposed activities for the upcoming reporting period. Many States will continue to spend funds awarded during the previous years of this Section 157 Innovative Grant program. NHTSA does not intend that States submit separate Quarterly Reports for the various funding years. Activities carried out during a reporting period under all four years of funding should be documented in the same report. However, the State should include a tabulation of the amount of funds expended during the reporting period from each year. Also, during the first two years, a number of States modified their grants to change from Quarterly to Monthly reporting. Those States should continue to submit Monthly Reports during the fifth year, at least until all previous year funds have been spent. Any decisions and actions required in the upcoming program period should be included in the report.

*2. Final Report*—A Final Report that includes a summary of the impact of the year-long (CY 2004) program. It should include a complete description of the innovative projects conducted, including partners, overall program implementation, evaluation methodology and findings from the program evaluation, if any. In terms of information transfer, it is important to know what worked and what did not work, under what circumstances, and what can be done to avoid potential problems in future projects. The grantee shall submit three copies of the Final Report to the Regional Office within fifteen months following grant award.

**Application Review Procedures**

All applications will be reviewed by an Evaluation Committee to ensure that the application meets all of the requirements contained in this notice, including the requirements contained in the Application Contents and Grant Criteria section of the Notice. This evaluation process may include submission of technical or program questions from the evaluation committee to the applicants. In addition, the Evaluation Committee will determine whether the activities and identified resources included in the proposals have potential to make a significant impact on safety belt use. To the extent that the Evaluation Committee determines that proposed

activities will not have substantial impact potential, such activities will not be recommended for funding.

More specifically, the Evaluation Committee's review will assess: (a) The comprehensiveness, intensity, feasibility, and potential impact of the proposed approach (where Option A or B is elected, the Committee may rely on documentation from the previous year for assessment); (b) the extent to which adequate funding (from a variety of sources) has been identified to carry out the proposed program elements; and (c) the extent to which the funds requested in the grant proposal are allocated to the required program elements and not to activities with less potential for impact. Activities within any proposal that are determined by the evaluation team not to have significant potential for increasing safety belt usage in the State will not be approved for funding.

It is anticipated that awards will be made in February 2004.

**Marilena Amoni,**

*Associate Administrator for Program Development and Delivery.*

## Appendix A—NHTSA Regional Offices

Region I (CT, MA, ME, NH, RI, VT), Volpe National Transportation Systems Center, 55 Broadway, Kendall Square, Code 903, Cambridge, MA 02142

Region II (NJ, NY, PR), 222 Mamaroneck Avenue, Suite 204, White Plains, NY 10605

Region III (DE, DC, MD, PA, VA, WV), 10 South Howard Street, Suite 6700, Baltimore, MD 21201

Region IV (AL, FL, GA, KY, MS, NC, SC, TN), Atlanta Federal Center 61 Forsyth Street, SW, Suite 17T30, Atlanta, GA 30303

Region V (IL, IN, MI, MN, OH, WI), 19900 Governors Drive, Suite 201, Olympia Fields, IL 60461

Region VI (AR, LA, NM, OK, TX), 819 Taylor Street, Room 8A38, Fort Worth, TX 76102–6177

Region VII (IA, KS, MO, NE), 901 Locust Street, Room 466, Kansas City, MO 64106

Region VIII (CO, MT, ND, SD, UT, WY), 555 Zang Street, Room 430, Lakewood, CO 80228

Region IX (AZ, CA, HI, NV), 201 Mission Street, Suite 2230, San Francisco, CA 94105

Region X (AK, ID, OR, WA), 3140 Jackson Federal Building 915 Second Avenue, Seattle, WA 98174

## Appendix B—Application Checklist for Application Option A—Replication

State: _____

| Element | Check if included | Description |
|---|---|---|
| 1. Option A Checklist | | Include a checkmark in the ''check if included'' column for every item? |
| 2. Appendix C Certifications | | Place a checkmark on application Option A? Place a checkmark on all items appropriate, (i) through (viii)? Signature from Governor's Highway Safety Representative for certification of all checked items? |
| 3. Additional High-Visibility Enforcement Program subsequent to May 10–June 6 Mobilization (Optional). | | Describe a credible plan for carrying out a Subsequent Stepped Up Enforcement program supported by (at least) earned media? |
| 4. Appendix D Budget | | Detail all cost elements and the total proposed cost, following the format in Appendix D? |
| 5. Appendix D Budget | | Include information on remaining grant funds from Section 157 Innovative, and how they will be applied to the FY 2004 program? |
| 6. Appendix D Budget | | Identify the share of the total proposed cost that will be allocated to the May 2004 Mobilization and each of its major sub-elements (earned media, paid media, intensified enforcement and safety belt observational surveys)? |

## Appendix B—Application Checklist for Application Option B—Enhancement

State: _____

| Element | Check if included | Description |
|---|---|---|
| 1. May Mobilization Enhancements | | Describe a credible plan for enhancing the State's May 2003 Mobilization activities in May 2004? |
| 2. Option B Checklist | | Include a checkmark in ''check if included'' column for every item? |
| 3. Appendix C Certifications | | Place a checkmark on application option B? Place a checkmark on all items appropriate, (i) through (viii)? Signature from Governor's Highway Safety Representative for certification of all checked items? |
| 4. Additional High-Visibility Enforcement Program subsequent to May 10–June 6 Mobilization (Optional). | | Describe a credible plan for carrying out a Subsequent Stepped Up Enforcement program supported by (at least) earned media? |
| 5. Appendix D Budget | | Detail all cost elements and the total proposed cost, following the format in Appendix D? |
| 6. Appendix D Budget | | Include information on remaining grant funds from Section 157 Innovative, and how they will be applied to the FY 2004 program? |
| 7. Appendix D Budget | | Identify the share of the total proposed cost that will be allocated to the May 2004 Mobilization and each of its major sub-elements (earned media, paid media, intensified enforcement and safety belt observational surveys)? |

## Appendix B—Application Checklist for Application Option C—Complete

State: _____

| Element | Check if included | Description |
|---|---|---|
| 1a. Introduction | | Describe the State's geographic and demographic population distribution and other unique characteristics relevant to State's plan? |
| 1b. Introduction | | Describe the State's current use rate and recent trends, and discuss factors contributing to recent progress or lack of progress? |
| 1c. Introduction | | Specify a realistic goal for increasing safety belt use in 2004? |
| 2. Option C Checklist | | Include a checkmark in the ''check if included'' column for every item? |
| 3. Appendix C Certifications | | Place a checkmark on application option C? Place a checkmark on all items appropriate, (i) through (viii) Signature from Governor's Highway Safety Representative for certification of all checked items? |
| 4. May Mobilization Program Plan | | Describe a credible plan for carrying out the May 10–June 6 Mobilization, including enforcement, earned and paid media and observational surveys? |
| 5. Additional High-Visibility Enforcement program subsequent to the May 10–June 6 Mobilization (Optional). | | Describe a credible plan for carrying out a Subsequent Stepped Up Enforcement program supported by (at least) earned media? |
| 6. Appendix D Budget | | Detail all cost elements and the total proposed cost, following the format in Appendix D? |
| 7. Appendix D Budget | | Include information on remaining grant funds from Section 157 Innovative, and how they will be applied to the FY 2004 program? |
| 8. Appendix D Budget | | Identify the share of the total proposed cost that will be allocated to the May 2004 Mobilization and each of its major sub-elements (earned media, paid media, intensified enforcement and safety belt observational surveys)? |

## Appendix C—Certifications

The State must select only one Option: Please place a check mark in the blank space next to the selected option.

Option (A) _____ State is submitting a Replication Application and plans to replicate its May, 2003 Mobilization in May, 2004.

*Only* the States of Alaska, Arizona, California, Colorado, Delaware, District of Columbia, Georgia, Hawaii, Iowa, Idaho, Illinois, Indiana, Kentucky, Louisiana, Massachusetts, Maryland, Michigan, Minnesota, Missouri, North Carolina, Nebraska, New Jersey, Nevada, New York, Ohio, Oklahoma, Oregon, Pennsylvania, Rhode Island, South Carolina, Tennessee, Texas, Utah, Virginia, Washington and West Virginia may choose this option, as their May, 2003 Mobilizations converted at least one percent of the 2002 non-belt users into users.

Option (B) _____ State is submitting an Enhancement Application and will include a description of its plans to modify or enhance the May, 2004 Mobilization, over its approach to the May, 2003 Mobilization.

Any State listed in item (A) above may choose Option (B). Also, the States of Alabama, Arkansas, Connecticut, Florida, Mississippi, North Dakota, New Hampshire, Puerto Rico and Vermont may choose Option (B).

Option (C) _____ State is submitting a Complete Application in FY 2004.

*Any* State may elect to submit a complete application. The States of Kansas, Maine, Montana, New Mexico, South Dakota, Wisconsin and Wyoming *must* submit complete applications because those States did not receive a Section 157 Innovative grant in FY 2003.

The State must certify to the following items (i) through (v), and (vii) and (viii). The State may certify to item (vi). Please place a check mark in the space next to each selected item.

(i) _____ The State will use the funds awarded under this grant program exclusively to implement a statewide safety belt program in accordance with the requirements of Section 157(b) of Pub. L. 105–178 (TEA–21), as extended by the Surface Transportation Extension Act of 2003, Pub. L. 108–88.

(ii) _____ The State will administer the funds in accordance with 49 CFR part 18 and OMB Circular A–87.

(iii) The State will conduct a statewide Mobilization of high-visibility enforcement of its safety belt law from Monday, May 10 through Sunday, June 6, 2004. The Mobilization will include earned media (press events, news conferences, etc.) spanning the entire 4-week period; a paid media campaign, from Monday, May 17 through Sunday, May 30, featuring broadcast advertisements delivering the Click It or Ticket message, or other equally clear enforcement focused message that NHTSA explicitly approves; intensified enforcement activities (*e.g.*, safety belt checkpoints, enforcement zones, saturation patrols) spanning the period from Monday, May 24 through Sunday, June 6, and involving the participation of local law enforcement agencies serving at least 85 percent of the State's population.

(iv) _____ The State will conduct pre- and post-mobilization observational surveys of safety belt use. The post-mobilization observational survey will be a full statewide survey conforming to the Uniform Criteria, for which data collection will begin on or shortly after Monday, June 7 and will conclude no later than July 11, 2004. The pre-mobilization observational survey will be either a full statewide survey or a sub-sample survey derived from the full survey design; data collection for the pre-observational survey will begin no earlier than Thursday, April 1, and conclude no later than Sunday, May 9.

(v) _____ The State will provide pre- and post-mobilization observational survey data on safety belt use for the May, 2004 Mobilization within one month following the collection of the data.

(vi) _____ (Optional) The State will conduct an additional program of high-visibility enforcement of its safety belt law at one or more time periods during FY 2004, subsequent to the May 10—June 6 mobilization.

(vii) _____ The State will provide to the NHTSA Regional Administrator, no later than 15 months after the grant award, a report of activities carried out with grant funds and accomplishments to date.

(viii) _____ The State will comply with all applicable laws and regulations, financial and programmatic requirements.

_____

Governor's Highway Safety Representative

_____

Date

BILLING CODE 4910–59–P

# APPENDIX D – BUDGET TABLE

(The State shall complete the following Table, and include it in the application for the FY 2004 Section 157 Innovative grant.)

| | **FY 2004 157 INNOVATIVE Request** | **REMAINING FY 2003 157 INNOVATIVE Grant** | **REMAINING FY 2002 157 INNOVATIVE Grant** | **REMAINING FY 2001 157 INNOVATIVE Grant *** | **Other Funding Sources **** (Total available funds not needed) |
|---|---|---|---|---|---|
| **1. TOTAL** | $ | $ | $ | $ | ***Specify Sources:*** |
| **2. TOTAL TO BE APPLIED TO ITEMS 3-7** | | $ | | $ | $ |
| 3. Program Management/ Coordination:<br>• Personnel<br>• Other | $ | $ | $ | $ | $ |
| 4. Enforcement | $ | $ | $ | $ | $ |
| 5. PI & E:<br>• Paid Media<br>• Other | $ | $ | $ | $ | $ |
| 6. Outreach | $ | $ | $ | $ | $ |
| 7. Evaluation | $ | $ | $ | $ | $ |
| **8. DIFFERENCE BETWEEN ITEMS 1 AND 2 ABOVE**** | $ | $ | $ | $ | ***Not Applicable*** |

* Remember all remaining FY2001 Section 157 Innovative Grant funds must be spent by September 30, 2004.

** Other funding sources include: other Federal grants, private funds, State and local funds, etc.

*** In the application, the State shall provide an explanation for any values other than zero in Item 8 above.

[FR Doc. 03–29850 Filed 11–28–03; 8:45 am]

BILLING CODE 4910–59–C

Federal Register

Monday,
December 1, 2003

# Part II

# State Justice Institute

## Grant Guideline; Notice

## STATE JUSTICE INSTITUTE

### Grant Guideline

**AGENCY:** State Justice Institute.

**ACTION:** Final grant guideline.

**SUMMARY:** This Guideline sets forth the administrative, programmatic, and financial requirements attendant to Fiscal Year 2004 State Justice Institute grants, cooperative agreements, and contracts.

**EFFECTIVE DATE:** December 1, 2003.

**FOR FURTHER INFORMATION CONTACT:** David I. Tevelin, Executive Director, or Kathy Schwartz, Deputy Director, State Justice Institute, 1650 King St. (Suite 600), Alexandria, VA 22314, (703) 684–6100.

**SUPPLEMENTARY INFORMATION:** Pursuant to the State Justice Institute Act of 1984, 42 U.S.C. 10701, *et seq.*, as amended, the Institute is authorized to award grants, cooperative agreements, and contracts to State and local courts, nonprofit organizations, and others for the purpose of improving the quality of justice in the State courts of the United States.

This Guideline is being published at a time when the Institute is operating on a Continuing Resolution (CR). The Guideline is contingent on further action by Congress to either extend the CR or enact an appropriations bill funding the Institute in FY 2004 at no less than the level approved by the House of Representatives ($3 million).

### Types of Grants Available and Funding Schedules

SJI will offer five types of grants in FY 2004: Project Grants, Technical Assistance (TA) Grants, Judicial Branch Education Technical Assistance (JBE TA) Grants, Continuation Grants, and Scholarships.

*Project Grants.* Project Grants are awarded to support innovative education, research, demonstration, and technical assistance projects that can improve the administration of justice in State courts nationwide. As provided in section V.C. of the Guideline, Project Grants may ordinarily not exceed $150,000 a year; however, grants in excess of $100,000 are likely to be rare, and awarded only to support projects likely to have a significant national impact.

SJI also awards ''think piece'' Project Grants to support the development of essays of publishable quality that explore emerging issues that could result in significant changes in court processes or judicial administration. ''Think pieces'' are limited to no more than $10,000. *See* section II.B.

*Special Interest Categories.* Project Grants, including ''think piece'' grants, will be awarded only for projects that fall within one of the Guideline's five Special Interest categories: Access to the Courts, Application of Technology in the Courts, Children and Families in Court, Judicial Branch Education, and the Relationship Between State and Federal Courts. The Judicial Branch Education category now includes specific topics of interest pertaining to rape, sexual assault, and other sexual violence, as a result of an Interagency Agreement with the Department of Justice's Office on Violence Against Women. *See* section II.A.4.

The deadline for submitting a Project Grant application is February 13, 2004. The Board of Directors will meet in early May 2004 to approve grant awards. *See* section VI.A. for Project Grant application procedures.

*Technical Assistance Grants.* Section II.C. reserves up to $300,000 for Technical Assistance Grants. Under this program, a State or local court may receive a grant of up to $30,000 to engage outside experts to provide technical assistance to diagnose, develop, and implement a response to a jurisdiction's problems.

Letters of application for a Technical Assistance Grant may be submitted at any time. Applicants submitting letters by January 9, 2004 will be notified by April 2, 2004; those submitting letters between January 10 and February 27, 2004 will be notified by June 11, 2004; those submitting letters between February 28 and June 4, 2004 will be notified by August 27, 2004; and those submitting letters between June 5 and September 24, 2004 will be notified of the Board's decision by December 10, 2004. *See* section VI.D. for Technical Assistance Grant application procedures.

*Judicial Branch Education Technical Assistance Grants.* Section II.A.4.b. of the Guideline allocates up to $150,000 for grants under the JBE TA grant program this year. Grants of up to $20,000 are available to: (1) enable a State or local court to adapt and deliver an education program that was previously developed and evaluated under an SJI project grant (*i.e.*, curriculum adaptation); and/or (2) support expert consultation in planning, developing, and administering State judicial branch education programs.

The services available through the expanded program could include consultant assistance in maintaining judicial branch education programming during the current budget crisis, or development of improved methods for evaluating judicial branch education programs. Letters requesting JBE TA Grants may be submitted at any time. The grant cycles for JBE TA Grants are the same as the grant cycles for TA Grants:

Applicants submitting letters by January 9, 2004 will be notified by April 2, 2004; those submitting letters between January 10 and February 27, 2004 will be notified by June 11, 2004; those submitting letters between February 28 and June 4, 2004 will be notified by August 27, 2004; and those submitting letters between June 5 and September 24, 2004 will be notified of the Board's decision by December 10, 2004. *See* section VI.E. for JBE TA Grant application procedures.

*Scholarships.* Section II.A.4.c. of the Guideline allocates up to $200,000 of FY 2004 funds for scholarships to enable judges and court managers to attend out-of-State education and training programs. A scholarship of up to $1,500 may be awarded to pay for a recipient's travel and tuition costs and, new this year, reasonable lodging costs.

Scholarships for eligible applicants are approved largely on a ''first come, first served'' basis, although the Institute may approve or disapprove scholarship requests in order to achieve appropriate balances on the basis of geography, program provider, and type of court or applicant (*e.g.*, trial judge, appellate judge, trial court administrator). Scholarships will be approved only for programs that either (1) address topics included in the Guideline's Special Interest categories (section II.A.); (2) enhance the skills of judges and court managers; or (3) are part of a graduate degree program for judges or court personnel.

Applicants interested in obtaining a scholarship for a program beginning between April 1 and June 30, 2004 must submit their applications and documents between January 5 and March 1, 2004. For programs beginning between July 1 and September 30, 2004, the applications and documents must be submitted between April 5 and May 31, 2004. For programs beginning between October 1 and December 31, 2004, the applications and documents must be submitted between July 6 and August 30, 2004. For programs beginning between January 1 and March 31, 2005, the applications and documents must be submitted between October 4 and November 29, 2004. *See* section VI.F. for Scholarship application procedures.

*Continuation Grants.* Continuation Grants (*See* sections III.D., V.B.2., and VI.C.) are intended to enhance the specific program or service begun during the initial project grant period. The Guideline establishes a firm limit

for Continuation Grants of 20% of the total amount projected to be available for all Project Grants in FY 2004. Grantees should accordingly be aware that the award of a grant to support a project does not constitute a commitment to provide continuation funding. No grant awarded in FY 2004 will be continued for more than five years.

An applicant for a Continuation Grant must submit a letter notifying the Institute of its intent to seek such funding no later than 120 days before the end of the current grant period. The Institute will then notify the applicant of the deadline for its Continuation Grant application.

**Matching Requirements**

With the exception of JBE TA grantees, grantees that can demonstrate a financial hardship, and Scholarship recipients, all grantees must provide match, including cash match, for any Institute grant. The matching requirements are summarized below:

*State and local units of government.* The Guideline requires these grantees to provide matching support equal to 50% of a new SJI-funded project. For example, if a State court system receives a $100,000 grant from the Institute, it must provide a $50,000 match. A State or local unit of government must provide at least 20% of the required match for a new grant ($10,000 in the example) in the form of cash rather than in-kind support (*e.g.*, the value of staff time contributed to the project).

*All other grantees.* All other grantees must contribute a match of 25% to a new SJI-funded project. For example, if a non-profit organization receives a $100,000 grant from SJI, it must provide a $25,000 match. A non-profit must provide at least 10% of the required match for a new grant ($2,500 in the example) in the form of cash.

The amount and nature of unrequired match contributed by applicants will continue to be factors the Board of Directors considers in making grant decisions. Applicants may request a waiver of the match requirement, the cash match requirement, or both. *See* section VIII.A.8.c.

*Continuation Grants.* Under section VIII.A.8., all grantees are required to assume a greater share of project support over time. State and local units of government are required to provide match equaling at least 50% of the amount provided by SJI in the first year of the project, 60% in the second year, 75% in the third year, 90% in the fourth year, and 100% in the fifth year. For example, if SJI awards a State court $100,000 for the first year of a grant, the court would be required to provide $50,000 in match. If the second-year grant is also $100,000, the court would be required to provide $60,000 in match. A court that wished to limit its second-year contribution to $50,000 could ask SJI for a reduced amount, *i.e.*, $83,333, in order to meet the 60% requirement.

All other grantees must provide match equaling at least 25% of the amount provided by SJI in the first year of the project, 30% in the second year, 37.5% in the third year, 45% in the fourth year, and 50% in the fifth year. For example, if SJI awards a non-profit organization $100,000 for the first year of a grant, the organization would be required to provide $25,000 in match. If the second year grant is also $100,000, the court would be required to provide $30,000 in match. An organization that wished to limit its second-year contribution to $25,000 could ask SJI for a reduced amount, *i.e.*, $83,333, in order to meet the 30% requirement.

Absent extraordinary circumstances, no SJI grant awarded in FY 2004 will continue for more than five years.

**Solutions Project**

In FY 2003, the Institute allocated approximately $800,000 to support the Solutions Project, a process that will draw on State and local court initiatives to identify and exchange promising solutions to the most critical problems facing the courts, and define a national agenda to improve the quality of justice in State courts nationwide.

Nearly $400,000 of the allocation was awarded in amounts up to $20,000 to 20 States. A list of the States receiving those grants and a description of their projects may be found on the Institute's Web site (*http://www.statejustice.org*). At its meeting in November, the Board approved the remaining $400,000 of FY 2003 money (as well as a conditional grant of $400,000 from FY 2004 money) for a National Solutions Project that will be carried out under a cooperative agreement among SJI, the National Center for State Courts (NCSC), and the Center for Effective Public Policy (CEPP).

The National Project will include five phases:

(1) *Definition of key problem areas.* Project staff will identify five priority areas of focus by reviewing the professional literature, drawing on the 20 States' experiences with their Solutions Project grants, surveying the members of the Conference of State Court Administrators (COSCA), convening a focus group of COSCA members, and consulting with the project advisory committee.

(2) *Identification and synthesis of information on solutions.* Staff will identify and catalog existing information on solutions to the five problem areas selected, then seek additional solutions from COSCA members, NCSC's Knowledge and Information Service, JERITT, and other court support organizations. This information will be supplemented by the experiences of the Project's technical assistance sites and ''community of practice'' members (see 3–5 below). Staff will create and maintain a current catalog of solutions and resources, and prepare practice briefs for each of the five focus topics.

(3) *Technical assistance (TA) to implement solutions.* The Project will provide on-site TA to help implement solutions in an anticipated 40 courts or court systems. The application process for obtaining TA will be announced shortly.

(4) *Intensive technical assistance to partner courts.* Five partner courts will be selected for intensive TA to be provided by CEPP. Intensive TA will require the host court to enter into a partnership with CEPP by committing significant leadership resources and staff time to the effort. Intensive TA will include a quarterly on-site visit over the course of a year, expert consultant services in the focus area, assistance in forming a ''court working team'' to lead the implementation effort, a full-day retreat for the team, team members' attendance at a national workshop for the intensive sites, and membership in a national ''community of practice'' including web conferences and other on-line services.

(5) *Information dissemination.* NCSC will establish a Solutions web page on its Internet site that will be accessible through other court-related Web sites, host the national communities of practice, and periodically update the national court community about Project developments. The communities of practice will enable court practitioners working in a specific area to share their experiences and knowledge with each other.

**Response to Comments**

Of the 11 comments received, 8 addressed the Proposed Guideline's intent to reduce the allocations reserved for the Institute's 3 small grant programs: TA Grants, JBE TA Grants, and Scholarships. On the basis of the comments, the Final Guideline restores the allocations for the TA Grant program and Scholarships to their prior levels ($300,000 and $200,000, respectively). In response to a comment, the Board of Directors also approved expanding the

use of SJI scholarship funds to include reasonable lodging costs. *See* section VI.F.

In addition, the Final Guideline adopts the proposed policy to exempt recipients of JBE TA Grants from the requirement to provide cash match.

**Recommendations to Grantwriters**

Recommendations to Grantwriters may be found in Appendix A.

The following Grant Guideline is adopted by the State Justice Institute for FY 2004:

**Table of Contents**

I. The Mission of the State Justice Institute
II. Scope of the Program
III. Definitions
IV. Eligibility for Award
V. Types of Projects and Grants; Size of Awards
VI. Applications
VII. Application Review Procedures
VIII. Compliance Requirements
IX. Financial Requirements
X. Grant Adjustments
Appendix A—Recommendations to Grant Writers
Appendix B—Answers to Grantees' Frequently Asked Questions
Appendix C—SJI Libraries: Designated Sites and Contacts
Appendix D—Illustrative List of Technical Assistance Grants
Appendix E—Illustrative List of Model Curricula
Appendix F—State Justice Institute Application (Forms A, B, C, C1, D, and Disclosure of Lobbying Activities)
Appendix G—Line-Item Budget Form (Form E)
Appendix H—Scholarship Application Forms (Forms S1 and S2)

## I. The Mission of the State Justice Institute

The Institute was established by Pub. L. 98–620 to improve the administration of justice in the State courts of the United States. Incorporated in the State of Virginia as a private, nonprofit corporation, the Institute is charged, by statute, with the responsibility to:

- Direct a national program of financial assistance designed to assure that each citizen of the United States is provided ready access to a fair and effective system of justice;
- Foster coordination and cooperation with the Federal judiciary;
- Promote recognition of the importance of the separation of powers doctrine to an independent judiciary; and
- Encourage education for judges and support personnel of State court systems through national and State organizations, including universities.

To accomplish these broad objectives, the Institute is authorized to provide funds to State courts, national organizations which support and are supported by State courts, national judicial education organizations, and other organizations that can assist in improving the quality of justice in the State courts.

The Institute is supervised by an 11-member Board of Directors appointed by the President, with the consent of the Senate. The Board is statutorily composed of six judges, a State court administrator, and four members of the public, no more than two of whom can be of the same political party.

Through the award of grants, contracts, and cooperative agreements, the Institute is authorized to perform the following activities:

A. Support research, demonstrations, special projects, technical assistance, and training to improve the administration of justice in the State courts;

B. Provide for the preparation, publication, and dissemination of information regarding State judicial systems;

C. Participate in joint projects with Federal agencies and other private grantors;

D. Evaluate or provide for the evaluation of programs and projects funded by the Institute to determine their impact upon the quality of criminal, civil, and juvenile justice and the extent to which they have contributed to improving the quality of justice in the State courts;

E. Encourage and assist in furthering judicial education;

F. Encourage, assist, and serve in a consulting capacity to State and local justice system agencies in the development, maintenance, and coordination of criminal, civil, and juvenile justice programs and services; and

G. Be responsible for the certification of national programs that are intended to aid and improve State judicial systems.

## II. Scope of the Program

As set forth in Section I., the Institute is authorized to fund projects addressing a broad range of program areas. However, during FY 2004, the Institute will consider applications for funding support that address only the topics included in the following five program categories designated by the Board as being of special interest. Funds will not be made available for the ordinary, routine operation of court systems or programs in any of these areas.

*A. Special Interest Program Categories*

The Institute is interested in funding both innovative programs and programs of proven merit that can be replicated in other jurisdictions. The Institute is especially interested in funding projects that:

- Formulate new procedures and techniques, or creatively enhance existing procedures and techniques;
- Address aspects of the State judicial systems that are in special need of serious attention;
- Have national significance by developing products, services, and techniques that may be used in other States; and
- Create and disseminate products that effectively transfer the information and ideas developed to relevant audiences in State and local judicial systems, or provide technical assistance to facilitate the adaptation of effective programs and procedures in other State and local jurisdictions.

A project will be identified as a *Special Interest* project if it meets the four criteria set forth above and it falls within the scope of the *Special Interest* program categories designated below.

The Board has designated the areas set forth below as *Special Interest* program categories. The order of listing does not imply any ordering of priorities among the categories. For a complete list of projects supported in previous years in each of these categories, please visit the Institute's Internet homepage at *http://www.statejustice.org/* and click on *Grants by Category.*

1. Access to the Courts

This category includes demonstration, evaluation, research, and education projects designed to improve the responsiveness of courts to public concerns regarding the fairness, accessibility, timeliness, and comprehensibility of the court process.

The Institute is particularly interested in supporting innovative projects that:

- Test and evaluate approaches permitting self-represented litigants to file pleadings, responses, and other forms electronically;
- Test and evaluate new approaches to enhance public access to the courts, including demonstrations of innovative collaborative efforts between courts and community institutions (*e.g.*, bar associations, legal service agencies, schools, and public libraries) to enhance access to the courts by people without lawyers (in this regard, however, Institute funds may not be used to directly or indirectly support legal representation of individuals in specific cases); and

• Develop and test a range of strategies, methodologies, guidelines, and outcome measures to evaluate the effectiveness of programs established to assist people without lawyers.

2. Application of Technology in the Courts

This category includes the testing of innovative applications of technology to improve the operation of court management systems and judicial practices at both the trial and appellate court levels. The Institute seeks to support local experiments with promising but untested applications of technology in the courts that include an evaluation of the impact of the technology in terms of costs, benefits, and staff workload, and a training component to assure that staff is appropriately educated about the purpose and use of the new technology. In this context, ''untested'' includes novel applications of technology developed for the private sector that have not previously been applied in the courts.

The Institute is particularly interested in supporting efforts to test and evaluate technologies that would:

• Test and evaluate approaches permitting self-represented litigants to file pleadings, responses, and other forms electronically;

• Demonstrate and evaluate the delivery of technology to rural courts through an Internet-based ''application service provider'' approach;

• Evaluate approaches for electronically filing pleadings, briefs, and other documents; approaches to integrate electronic filing and electronic document management; and the impact of electronic court record systems on case management and court procedures;

• Test and evaluate the use of Geographic Information System (GIS) software as a means of examining and improving courts' outreach to particular segments of the communities they serve;

• Demonstrate and evaluate the use of expert system technology to assist judicial decision-making; and

• Evaluate innovative applications of technology designed to ensure the safety of all who use and work in the courts.

3. Children and Families in Court

This category includes education, demonstration, evaluation, technical assistance, and research projects to identify and inform judges of innovative, effective approaches for handling cases involving children and families. The Institute is particularly interested in projects that would:

• Test and evaluate different approaches to managing and adjudicating domestic violence cases, including domestic violence courts; integrated case management information systems; collaborations among courts, law enforcement agencies, social service agencies, women's shelters, victims support and advocacy organizations, and others; and other innovative practices intended to improve the courts' response to domestic violence.

• Demonstrate and evaluate innovative approaches to manage and coordinate cases and proceedings involving multiple members of the same family;

• Demonstrate and evaluate the effectiveness of a ''one social worker/one family'' or judge-social worker team approach to handling child abuse and neglect cases;

• Develop and test innovative protocols, procedures, educational programs, and other measures to address the service needs of children exposed to family violence and the methods for mitigating those effects when issuing protection, custody, visitation, or other orders;

• Educate judges about how to interpret and evaluate evidence presented by psychologists, psychiatrists, and other professionals appearing in child custody and visitation cases involving domestic violence between the parents;

• Develop and test the implementation of a differentiated case management system for handling child custody disputes;

• Develop and evaluate educational programs addressing a collaborative community approach to reducing and preventing domestic violence for a multidisciplinary audience that includes judges, prosecutors, defense attorneys, victim advocates, doctors, and social services providers;

• Evaluate the impact of court policies and procedures and collaborative community approaches designed to ensure that juvenile sex offenders have access to an appropriate array of services; and

• Create and test educational programs, guidelines, and monitoring systems to assure that the juvenile justice system meets the needs of girls and children of color.

Institute funds may not be used to provide operational support to programs offering direct services or compensation to victims of crimes. (Applicants interested in obtaining such operational support should contact the Office for Victims of Crime [OVC], Office of Justice Programs, U.S. Department of Justice, or the agency in their State that awards OVC funds to State and local victim assistance and compensation programs.)

4. Judicial Branch Education

The Institute is interested in supporting projects that will continue to strengthen and broaden the availability of court education programs at the State, regional, and national levels. This category is divided into three subsections: (a) Innovative Educational Programs; (b) Judicial Branch Education Technical Assistance Projects; and (c) Scholarships.

a. *Innovative Educational Programs.* This category includes support for the development and pilot-testing of innovative, high-quality educational programs for trial and appellate judges or court personnel that address key issues of concern to the nation's courts, or help local courts or State court systems develop or enhance their capacity to deliver quality continuing education.

Programs may be designed for presentation at the local, State, regional, or national level. Ordinarily, court education programs should be based on an assessment of the needs of the target audience; include clearly stated learning objectives that delineate the new knowledge or skills participants will acquire (as opposed to a description of what will be taught); incorporate adult education principles and multiple teaching/learning methods; and result in the development of a curriculum as defined in section III.E.

The Institute is particularly interested in supporting the development of programs that:

• Educate judges and court personnel about how to design and sustain problem-solving courts;

• Educate State court judges, law clerks, and staff counsel about capital case law, DNA evidence, and other legal and scientific issues related to the trial and appeal of capital cases;

• Educate State court judges and court personnel about special problems related to the adjudication of capital cases, including jury voir dire, jury sequestration, sentencing hearings, court security, and media management; and

• Develop and test curricula and materials designed to familiarize judges and court managers with the need for and key elements of effective assistance programs for people without lawyers, and the resources required to sustain them.

In addition, pursuant to an Interagency Agreement with the Department of Justice's Office on Violence Against Women, the Board is reserving approximately $800,000 to

support judicial branch education programs addressing rape and other sexual violence. In particular, the Institute is interested in projects that will:

• Develop, test, and evaluate in-person training and Internet-based or other distance-learning curricula on rape and sexual assault for State court judges;

• Adapt or replicate a judicial branch education curriculum about rape and sexual violence designed for a national or regional audience for presentation at the State or local level; and

• Educate judges about the unique characteristics of juvenile sex offenders and the specialized array of age-appropriate services they require to control their abusive behavior.

b. *Judicial Branch Education Technical Assistance Projects.* The Board is reserving up to $150,000 to support technical assistance and on-site consultation in planning, developing, and administering comprehensive and specialized State judicial branch education programs, as well as the adaptation of model curricula previously developed with SJI funds.

The goals of the Judicial Branch Education Technical Assistance Program (JBE TA) in FY 2004 are to:

(1) Provide State and local courts with the opportunity to access expert strategic assistance to enable them to maintain judicial branch education programming during the current budget crisis; and

(2) Enable courts to modify a model curriculum, course module, or conference program developed with SJI funds to meet a particular State's or local jurisdiction's educational needs; train instructors to present portions or all of the curriculum; and pilot-test it to determine its appropriateness, quality, and effectiveness. An illustrative but non-inclusive list of the curricula that may be appropriate for adaptation is contained in Appendix E.

Only State or local courts may apply for JBE TA funding. Application procedures may be found in Section VI.E. State and local courts are not required to contribute cash match to JBE TA grants.

c. *Scholarships for Judges and Court Managers.* The Institute is reserving up to $200,000 to support a scholarship program for State judges and court managers. The purposes of the scholarship program are to:

• Enhance the skills, knowledge, and abilities of judges and court managers;

• Enable State court judges and court managers to attend out-of-State educational programs sponsored by national and State providers that they could not otherwise attend because of limited State, local, and personal budgets; and

• Provide States, judicial educators, and the Institute with evaluative information on a range of judicial and court-related education programs.

Scholarships will be granted to individuals only for the purpose of attending an out-of-State educational program within the United States. Application procedures may be found in Section VI.F.

5. The Relationship Between State and Federal Courts

This category includes education, research, demonstration, and evaluation projects designed to facilitate appropriate and effective communication, cooperation, and coordination between State and Federal courts.

The Institute is particularly interested in innovative projects that:

• Evaluate State and Federal courts' experiences with capital cases to identify reasons for reversals of trial court convictions, barriers to timely disposition, and steps that can be taken to minimize reversals and undue delay;

• Educate judges about capital case law, DNA evidence, and judicial administration issues arising from death penalty cases, *e.g.*, court security, jury sequestration, and media management;

• Establish standards for selecting qualified appointed defense counsel in capital cases, and evaluating different appointment approaches;

• Support commissions that involve members of the judiciary in reviewing and remedying errors that led to wrongful convictions in death penalty cases;

• Coordinate and process mass tort cases fairly and efficiently at the trial and appellate levels;

• Provide assistance to courts in developing plans to continue operations in the wake of a catastrophic incident, including establishing lines of succession; and

• Develop effective emergency responses to acts of terrorism.

*B. ''Think Pieces''*

This category addresses the development of essays of publishable quality directed to the court community. The essays should explore emerging issues that could result in significant changes in court process or judicial administration and their implications for the future for judges, court managers, policy-makers, and the public. Grants supporting such projects are limited to no more than $10,000. Applicants should follow the procedures explained in section VI.B. of this Guideline.

Think piece topics are limited to the five Special Interest categories listed in section II.A. of this Guideline. In particular, the Institute is interested in supporting the development of essays on:

• Issues related to the institutionalization and maintenance of drug and other problem-solving courts, *e.g.*, maintaining budgets in fiscally constrained times, finding new sources of money, identifying and selecting new judges while still maintaining the focus of the court and enthusiasm for the concept;

• What the courts have learned from problem-solving approaches that can be applied throughout the court system to enhance public trust and confidence; and

• The advantages, disadvantages, and appropriate use of anonymous juries.

*C. Technical Assistance Grants*

The Board will set aside up to $300,000 to support the provision of technical assistance to State and local courts. The program is designed to provide State and local courts with sufficient support to obtain technical assistance to diagnose a problem, develop a response to that problem, and implement any needed changes. The Institute will reserve sufficient funds each quarter to assure the availability of Technical Assistance Grants throughout the year.

Technical Assistance Grants are limited to no more than $30,000 each, and may cover the cost of obtaining the services of expert consultants; travel by a team of officials from one court to examine a practice, program, or facility in another jurisdiction that the applicant court is interested in replicating; or both. Normally, the technical assistance must be completed within 12 months after the start date of the grant.

Only a State or local court may apply for a Technical Assistance grant. The application procedures may be found in section VI.D.

**III. Definitions**

The following definitions apply for the purposes of this Guideline:

*A. Acknowledgment of SJI Support*

The prominent display of the SJI logo on the front cover of a written product or in the opening frames of a videotape developed with Institute support, and inclusion of a brief statement on the inside front cover or title page of the document or the opening frames of the videotape identifying the grant number.

*See* section VIII.A.11.a.(2) for the precise wording of the statement.

*B. Application*

A formal request for an Institute grant. A complete application consists of: Form A—Application; Form B—Certificate of State Approval (for applications from local trial or appellate courts or agencies); Form C—Project Budget/Tabular Format or Form C1—Project Budget/Spreadsheet Format; Form D—Assurances; Disclosure of Lobbying Activities; a detailed 25-page description of the need for the project and all related tasks, including the time frame for completion of each task, and staffing requirements; and a detailed budget narrative that provides the basis for all costs. *See* section VI. for a complete description of application submission requirements. *See* Appendix F for the Project Grant application forms.

*C. Close-out*

The process by which the Institute determines that all applicable administrative and financial actions and all required grant work have been completed by both the grantee and the Institute.

*D. Continuation Grant*

A grant lasting no longer than 15 months to permit completion of activities initiated under an existing Institute grant or enhancement of the products or services produced during the prior grant period. *See* section VI.C. for a complete description of continuation application requirements.

*E. Curriculum*

The materials needed to replicate an education or training program developed with grant funds including, but not limited to: The learning objectives; the presentation methods; a sample agenda or schedule; an outline of presentations and relevant instructors' notes; copies of overhead transparencies or other visual aids; exercises, case studies, hypotheticals, quizzes, and other materials for involving the participants; background materials for participants; evaluation forms; and suggestions for replicating the program, including possible faculty or the preferred qualifications or experience of those selected as faculty.

*F. Designated Agency or Council*

The office or judicial body which is authorized under State law or by delegation from the State Supreme Court to approve applications for SJI grant funds and to receive, administer, and be accountable for those funds.

*G. Disclaimer*

A brief statement that must be included at the beginning of a document or in the opening frames of a videotape produced with Institute support that specifies that the points of view expressed in the document or tape do not necessarily represent the official position or policies of the Institute. *See* section VIII.A.11.a.(2) for the precise wording of this statement.

*H. Grant Adjustment*

A change in the design or scope of a project from that described in the approved application, acknowledged in writing by the Institute. *See* section X.A for a list of the types of changes requiring a formal grant adjustment. Ordinarily, changes requiring a Grant Adjustment (including budget reallocations between direct cost categories that individually or cumulatively exceed five percent of the approved original budget) should be requested at least 30 days in advance of the implementation of the requested change.

*I. Grantee*

The organization, entity, or individual to which an award of Institute funds is made. For a grant based on an application from a State or local court, *grantee* refers to the State Supreme Court or its designee.

*J. Human Subjects*

Individuals who are participants in an experimental procedure or who are asked to provide information about themselves, their attitudes, feelings, opinions, and/or experiences through an interview, questionnaire, or other data collection technique.

*K. Judicial Branch Education Technical Assistance (JBE TA) Grant*

A grant of up to $20,000 awarded to a State or local court to support expert assistance in designing or delivering judicial branch education programming, and/or the adaptation of an education program based on an SJI-supported curriculum that was previously developed and evaluated under an SJI Project Grant. *See* section VI.E. for a complete description of JBE TA Grant application requirements.

*L. Match*

The portion of project costs not borne by the Institute. Match includes both in-kind and cash contributions. Cash match is the direct outlay of funds by the grantee to support the project. Examples of cash match are the dedication of funds to support a new employee or purchase new equipment to carry out the project; that portion of the grantee's Federally approved indirect cost rate that exceeds the Guideline's limit of permitted charges (75% of salaries and benefits); any other reduction in the indirect cost rate to be charged to the grant; and the application of project income (*e.g.*, tuition or the proceeds of sales of grant products) generated during the grant period to grant costs.

In-kind match consists of contributions of time and/or services of current staff members, space, supplies, etc., made to the project by the grantee or others (*e.g.*, advisory board members) working directly on the project.

Under normal circumstances, allowable match may be incurred only during the project period. When appropriate, and with the prior written permission of the Institute, match may be incurred from the date of the Board of Directors' approval of an award. Match does not include the time of participants attending an education program.

*See* section VIII.A.8. for the Institute's matching requirements.

*M. Products*

Tangible materials resulting from funded projects including, but not limited to: Curricula; monographs; reports; books; articles; manuals; handbooks; benchbooks; guidelines; videotapes; audiotapes; computer software; and CD–ROM disks.

*N. Project Grant*

An initial grant lasting up to 15 months to support an innovative education, research, demonstration, or technical assistance project that can improve the administration of justice in State courts nationwide. Ordinarily, a project grant may not exceed $150,000 a year; however, a grant in excess of $100,000 is likely to be rare and awarded only to support highly promising projects that will have a significant national impact. *See* section VI.A. for a complete description of Project Grant application requirements.

*O. Project-Related Income*

Interest, royalties, registration and tuition fees, proceeds from the sale of products, and other earnings generated as a result of an Institute grant. Registration and tuition fees, and proceeds from the sale of products generated during the grant period may be counted as match. For a more complete description of different types of project-related income, *see* section IX.G.

*P. Scholarship*

A grant of up to $1,500 awarded to a judge or court employee to cover tuition, transportation, and reasonable lodging expenses for an out-of-State educational program within the United States. *See* section VI.F. for a complete description of scholarship application requirements.

*Q. Special Condition*

A requirement attached to a grant award that is unique to a particular project.

*R. State Supreme Court*

The highest appellate court in a State, or, for the purposes of the Institute program, a constitutionally or legislatively established judicial council that acts in place of that court. In States having more than one court with final appellate authority, *State Supreme Court* means that court which also has administrative responsibility for the State's judicial system. *State Supreme Court* also includes the office of the court or council, if any, it designates to perform the functions described in this Guideline.

*S. Subgrantee*

A State or local court which receives Institute funds through the State Supreme Court.

*T. Technical Assistance Grant*

A grant, lasting up to 12 months, of up to $30,000 to a State or local court to support outside expert assistance in diagnosing a problem and developing and implementing a response to that problem. *See* section VI.D. for a complete description of technical assistance grant application requirements.

## IV. Eligibility for Award

The Institute is authorized by Congress to award grants, cooperative agreements, and contracts to the following entities and types of organizations:

A. *State and local courts and their agencies (42 U.S.C. 10705(b)(1)(A)).* Each application for funding from a State or local court must be approved, consistent with State law, by the State's Supreme Court or its designated agency or council. The latter shall receive all Institute funds awarded to such courts and be responsible for assuring proper administration of Institute funds, in accordance with section IX.C.2. of this Guideline.

B. *National nonprofit organizations controlled by, operating in conjunction with, and serving the judicial branches of State governments (42 U.S.C. 10705(b)(1)(B)).*

C. *National nonprofit organizations for the education and training of judges and support personnel of the judicial branch of State governments (42 U.S.C. 10705(b)(1)(C)).* An applicant is considered a national education and training applicant under section 10705(b)(1)(C) if:

1. The principal purpose or activity of the applicant is to provide education and training to State and local judges and court personnel; and

2. The applicant demonstrates a record of substantial experience in the field of judicial education and training.

D. *Other eligible grant recipients (42 U.S.C.10705(b)(2)(A)–(D)).*

1. Provided that the objectives of the project can be served better, the Institute is also authorized to make awards to:

a. Nonprofit organizations with expertise in judicial administration;

b. Institutions of higher education;

c. Individuals, partnerships, firms, corporations (for-profit organizations must waive their fees); and

d. Private agencies with expertise in judicial administration.

2. The Institute may also make awards to State or local agencies and institutions other than courts for services that cannot be adequately provided through nongovernmental arrangements (42 U.S.C. 10705(b)(3)).

E. *Inter-agency Agreements.* The Institute may enter into inter-agency agreements with Federal agencies (42 U.S.C. 10705(b)(4)) and private funders to support projects consistent with the purposes of the State Justice Institute Act.

## V. Types of Projects and Grants; Size of Awards

*A. Types of Projects*

The Institute supports the following general types of projects:

1. Education and training;
2. Research and evaluation;
3. Demonstration; and
4. Technical assistance.

*B. Types of Grants*

The Institute supports the following types of grants:

1. Project Grants

*See* sections II.A. and B., and VI.A. The Institute places no annual limitations on the overall number of project grant awards or the number of awards in each Special Interest category.

2. Continuation Grants

*See* sections III.D. and VI.C. In FY 2004, the Institute is allocating no more than 20% of available Project Grant funds for continuation grants.

3. Technical Assistance Grants

*See* sections II.C. and VI.D. In FY 2004, the Institute is reserving up to $300,000 for these grants.

4. Judicial Branch Education Technical Assistance Grants

*See* sections II.A.4.b., III.K., and VI.E. In FY 2004, the Institute is reserving up to $150,000 for Judicial Branch Education Technical Assistance Grants, which includes adaptations of curricula previously developed with SJI funding.

5. Scholarships

*See* sections II.A.4.c., III.P., and VI.F. In FY 2004, the Institute is reserving up to $200,000 for scholarships for judges and court employees. The Institute will reserve sufficient funds each quarter to assure the availability of scholarships throughout the year.

*C. Maximum Size of Awards*

1. Except as specified below, applicants for new Project Grants and continuation grants may request funding in amounts up to $150,000 for 15 months, although new and continuation awards in excess of $100,000 are likely to be rare and to be made, if at all, only for highly promising proposals that will have a significant impact nationally.

2. Applicants for Technical Assistance Grants may request funding in amounts up to $30,000.

3. Applicants for Judicial Branch Education Technical Assistance Grants may request funding in amounts up to $20,000.

4. Applicants for scholarships may request funding in amounts up to $1,500.

*D. Length of Grant Periods*

1. Grant periods for all new and continuation projects ordinarily may not exceed 15 months. Absent extraordinary circumstances, no grant will continue for more than five years.

2. Grant periods for Technical Assistance Grants and Judicial Branch Education Technical Assistance Grants ordinarily may not exceed 12 months.

## VI. Applications

*A. Project Grants*

An application for a Project Grant must include an application form; budget forms (with appropriate documentation); a project abstract and program narrative; a disclosure of lobbying form, when applicable; and certain certifications and assurances (see below). *See* Appendix F for the Project Grant application forms. For a summary of the application process, visit the Institute's Web site (*http://*

*www.statejustice.org*) and click on On-Line Tutorials, then Project Grant.

1. Forms

a. Application Form (FORM A)

The application form requests basic information regarding the proposed project, the applicant, and the total amount of funding requested from the Institute. It also requires the signature of an individual authorized to certify on behalf of the applicant that the information contained in the application is true and complete; that submission of the application has been authorized by the applicant; and that if funding for the proposed project is approved, the applicant will comply with the requirements and conditions of the award, including the assurances set forth in Form D.

b. Certificate of State Approval (FORM B)

An application from a State or local court must include a copy of FORM B signed by the State's Chief Justice or Chief Judge, the director of the designated agency, or the head of the designated council. The signature denotes that the proposed project has been approved by the State's highest court or the agency or council it has designated. It denotes further that if the Institute approved funding for the project, the court or the specified designee will receive, administer, and be accountable for the awarded funds.

c. Budget Forms (FORM C or C1)

Applicants may submit the proposed project budget either in the tabular format of FORM C or in the spreadsheet format of FORM C1. Applicants requesting $100,000 or more are strongly encouraged to use the spreadsheet format. If the proposed project period is for more than a year, a separate form should be submitted for each year or portion of a year for which grant support is requested, as well as for the total length of the project.

In addition to FORM C or C1, applicants must provide a detailed budget narrative providing an explanation of the basis for the estimates in each budget category. (*See* section VI.A.4. below.)

If funds from other sources are required to conduct the project, either as match or to support other aspects of the project, the source, current status of the request, and anticipated decision date must be provided.

d. Assurances (FORM D)

This form lists the statutory, regulatory, and policy requirements with which recipients of Institute funds must comply.

e. Disclosure of Lobbying Activities

Applicants other than units of State or local government are required to disclose whether they, or another entity that is part of the same organization as the applicant, have advocated a position before Congress on any issue, and to identify the specific subjects of their lobbying efforts. (*See* section VIII.A.7.)

2. Project Abstract

The abstract should highlight the purposes, goals, methods, and anticipated benefits of the proposed project. It should not exceed 1 single-spaced page on 8½ by 11 inch paper.

3. Program Narrative

The program narrative for an application may not exceed 25 double-spaced pages on 8½ by 11 inch paper. Margins must be at least 1 inch, and type size must be at least 12-point and 12 cpi. The pages should be numbered. This page limit does not include the forms, the abstract, the budget narrative, and any appendices containing resumes and letters of cooperation or endorsement. Additional background material should be attached only if it is essential to impart a clear understanding of the proposed project. Numerous and lengthy appendices are strongly discouraged.

The program narrative should address the following topics:

a. Project Objectives

The applicant should include a clear, concise statement of what the proposed project is intended to accomplish. In stating the objectives of the project, applicants should focus on the overall programmatic objective (*e.g.*, to enhance understanding and skills regarding a specific subject, or to determine how a certain procedure affects the court and litigants) rather than on operational objectives (*e.g.*, provide training for 32 judges and court managers, or review data from 300 cases).

b. Program Areas To Be Covered

The applicant should note the Special Interest category or categories that are addressed by the proposed project (*See* section II.A.).

c. Need for the Project

If the project is to be conducted in any specific location(s), the applicant should discuss the particular needs of the project site(s) to be addressed by the project and why those needs are not being met through the use of existing programs, procedures, services, or other resources.

If the project is not site-specific, the applicant should discuss the problems that the proposed project would address, and why existing programs, procedures, services, or other resources cannot adequately resolve those problems. The discussion should include specific references to the relevant literature and to the experience in the field.

d. Tasks, Methods and Evaluation

(1) *Tasks and Methods*. The applicant should delineate the tasks to be performed in achieving the project objectives and the methods to be used for accomplishing each task. For example:

(a) *For research and evaluation projects*, the applicant should include the data sources, data collection strategies, variables to be examined, and analytic procedures to be used for conducting the research or evaluation and ensuring the validity and general applicability of the results. For projects involving human subjects, the discussion of methods should address the procedures for obtaining respondents' informed consent, ensuring the respondents' privacy and freedom from risk or harm, and protecting others who are not the subjects of research but would be affected by the research. If the potential exists for risk or harm to human subjects, a discussion should be included that explains the value of the proposed research and the methods to be used to minimize or eliminate such risk.

(b) *For education and training projects*, the applicant should include the adult education techniques to be used in designing and presenting the program, including the teaching/learning objectives of the educational design, the teaching methods to be used, and the opportunities for structured interaction among the participants; how faculty would be recruited, selected, and trained; the proposed number and length of the conferences, courses, seminars, or workshops to be conducted and the estimated number of persons who would attend them; the materials to be provided and how they would be developed; and the cost to participants.

(c) *For demonstration projects*, the applicant should include the demonstration sites and the reasons they were selected, or if the sites have not been chosen, how they would be identified and their cooperation obtained; and how the program or procedures would be implemented and monitored.

(d) *For technical assistance projects*, the applicant should explain the types of assistance that would be provided; the particular issues and problems for which assistance would be provided; how requests would be obtained and the type of assistance determined; how suitable providers would be selected and briefed; how reports would be reviewed; and the cost to recipients.

(2) *Evaluation*. Every project must include an evaluation plan to determine whether the project met its objectives. The evaluation should be designed to provide an objective and independent assessment of the effectiveness or usefulness of the training or services provided; the impact of the procedures, technology, or services tested; or the validity and applicability of the research conducted. In addition, where appropriate, the evaluation process should be designed to provide ongoing or periodic feedback on the effectiveness or utility of the project in order to promote its continuing improvement. The plan should present the qualifications of the evaluator(s); describe the criteria that would be used to evaluate the project's effectiveness in meeting its objectives; explain how the evaluation would be conducted, including the specific data collection and analysis techniques to be used; discuss why this approach would be appropriate; and present a schedule for completion of the evaluation within the proposed project period.

The evaluation plan should be appropriate to the type of project proposed. For example:

(a) *Research*. An evaluation approach suited to many research projects is a review by an advisory panel of the research methodology, data collection instruments, preliminary analyses, and products as they are drafted. The panel should be comprised of independent researchers and practitioners representing the perspectives affected by the proposed project.

(b) *Education and Training*. The most valuable approaches to evaluating educational or training programs reinforce the participants' learning experience while providing useful feedback on the impact of the program and possible areas for improvement. One appropriate evaluation approach is to assess the acquisition of new knowledge, skills, attitudes, or understanding through participant feedback on the seminar or training event. Such feedback might include a self-assessment of what was learned along with the participant's response to the quality and effectiveness of faculty presentations, the format of sessions, the value or usefulness of the material presented, and other relevant factors. Another appropriate approach would be to use an independent observer who might request both verbal and written responses from participants in the program. When an education project involves the development of curricular materials, an advisory panel of relevant experts can be coupled with a test of the curriculum to obtain the reactions of participants and faculty as indicated above.

(c) *Demonstration*. The evaluation plan for a demonstration project should encompass an assessment of program effectiveness (*e.g.*, how well did it work?); user satisfaction, if appropriate; the cost-effectiveness of the program; a process analysis of the program (*e.g.*, was the program implemented as designed, and/or did it provide the services intended to the targeted population?); the impact of the program (*e.g.*, what effect did the program have on the court, and/or what benefits resulted from the program?); and the replicability of the program or components of the program.

(d) *Technical Assistance*. For technical assistance projects, applicants should explain how the quality, timeliness, and impact of the assistance provided would be determined, and develop a mechanism for feedback from both the users and providers of the technical assistance.

Evaluation plans involving human subjects should include a discussion of the procedures for obtaining respondents' informed consent, ensuring the respondents' privacy and freedom from risk or harm, and protecting others who are not the subjects of the evaluation but would be affected by it. Other than the provision of confidentiality to respondents, human subject protection issues ordinarily are not applicable to participants evaluating an education program.

e. Project Management

The applicant should present a detailed management plan, including the starting and completion date for each task; the time commitments to the project of key staff and their responsibilities regarding each project task; and the procedures that would ensure that all tasks are performed on time, within budget, and at the highest level of quality. In preparing the project time line, Gantt Chart, or schedule, applicants should make certain that all project activities, including publication or reproduction of project products and their initial dissemination, would occur within the proposed project period. The management plan must also provide for the submission of Quarterly Progress and Financial Reports within 30 days after the close of each calendar quarter (*i.e.*, no later than January 30, April 30, July 30, and October 30).

Applicants should be aware that the Institute is unlikely to approve more than one limited extension of the grant period. Therefore, the management plan should be as realistic as possible and fully reflect the time commitments of the proposed project staff and consultants.

f. Products

The program narrative in the application should contain a description of the products to be developed (*e.g.*, training curricula and materials, videotapes, articles, manuals, or handbooks), including when they would be submitted to the Institute. The budget should include the cost of producing and disseminating the product to each in-State SJI library (*See* Appendix C), State chief justice, State court administrator, and other appropriate judges or court personnel.

(1) *Dissemination Plan*. The application must explain how and to whom the products would be disseminated; describe how they would benefit the State courts, including how they could be used by judges and court personnel; identify development, production, and dissemination costs covered by the project budget; and present the basis on which products and services developed or provided under the grant would be offered to the courts community and the public at large (*i.e.*, whether products would be distributed at no cost to recipients, or if costs are involved, the reason for charging recipients and the estimated price of the product) (*See* section VIII.A.11.b.). Ordinarily, applicants should schedule all product preparation and distribution activities within the project period.

A copy of each product must be sent to the library established in each State to collect the materials developed with Institute support. (A list of these libraries is contained in Appendix C.) Applicants proposing to develop web-based products should provide for sending a hard-copy document to the SJI-designated libraries and other appropriate audiences to alert them to the availability of the Web site or electronic product (*i.e.*, a written report with a reference to the Web site).

Fifteen (15) copies of all project products must be submitted to the Institute, along with an electronic version in .html or .pdf format.

(2) *Types of Products and Press Releases*. The type of product to be prepared depends on the nature of the

project. For example, in most instances, the products of a research, evaluation, or demonstration project should include an article summarizing the project findings that is publishable in a journal serving the courts community nationally, an executive summary that would be disseminated to the project's primary audience, or both. Applicants proposing to conduct empirical research or evaluation projects with national import should describe how they would make their data available for secondary analysis after the grant period. (*See* section VIII.A.14.a.).

The curricula and other products developed through education and training projects should be designed for use outside the classroom so that they may be used again by the original participants and others in the course of their duties.

In addition, recipients of project grants must prepare a press release describing the project and announcing the results, and distribute the release to a list of national and State judicial branch organizations. SJI will provide press release guidelines and a list of recipients to grantees at least 30 days before the end of the grant period.

(3) *Institute Review.* Applicants must submit a final draft of all written grant products to the Institute for review and approval at least 30 days before the products are submitted for publication or reproduction. For products in a videotape or CD–ROM format, applicants must provide for Institute review of the product at the treatment, script, rough-cut, and final stages of development, or their equivalents. No grant funds may be obligated for publication or reproduction of a final grant product without the written approval of the Institute. (*See* section VIII.A.11.e.)

(4) *Acknowledgment, Disclaimer, and Logo.* Applicants must also include in all project products a prominent acknowledgment that support was received from the Institute and a disclaimer paragraph based on the example provided in section VIII.A.11.a.(2) of the Guideline. The ''SJI'' logo must appear on the front cover of a written product, or in the opening frames of a video, unless the Institute approves another placement.

g. Applicant Status

An applicant that is not a State or local court and has not received a grant from the Institute within the past three years should state whether it is either a national non-profit organization controlled by, operating in conjunction with, and serving the judicial branches of State governments, or a national non-profit organization for the education and training of State court judges and support personnel. *See* section IV. If the applicant is a nonjudicial unit of Federal, State, or local government, it must explain whether the proposed services could be adequately provided by non-governmental entities.

h. Staff Capability

The applicant should include a summary of the training and experience of the key staff members and consultants that qualify them for conducting and managing the proposed project. Resumes of identified staff should be attached to the application. If one or more key staff members and consultants are not known at the time of the application, a description of the criteria that would be used to select persons for these positions should be included. The applicant also should identify the person who would be responsible for managing and reporting on the financial aspects of the proposed project.

i. Organizational Capacity

Applicants that have not received a grant from the Institute within the past three years should include a statement describing their capacity to administer grant funds, including the financial systems used to monitor project expenditures (and income, if any), and a summary of their past experience in administering grants, as well as any resources or capabilities that they have that would particularly assist in the successful completion of the project.

Unless requested otherwise, an applicant that has received a grant from the Institute within the past three years should describe only the changes in its organizational capacity, tax status, or financial capability that may affect its capacity to administer a grant.

If the applicant is a non-profit organization (other than a university), it must also provide documentation of its 501(c) tax-exempt status as determined by the Internal Revenue Service and a copy of a current certified audit report. For purposes of this requirement, ''current'' means no earlier than two years prior to the present calendar year.

If a current audit report is not available, the Institute will require the organization to complete a financial capability questionnaire, which must be signed by a Certified Public Accountant. Other applicants may be required to provide a current audit report, a financial capability questionnaire, or both, if specifically requested to do so by the Institute.

j. Statement of Lobbying Activities

Non-governmental applicants must submit the Institute's Disclosure of Lobbying Activities Form, which documents whether they, or another entity that is a part of the same organization as the applicant, have advocated a position before Congress on any issue, and identifies the specific subjects of their lobbying efforts. *See* Appendix F.

k. Letters of Cooperation or Support

If the cooperation of courts, organizations, agencies, or individuals other than the applicant is required to conduct the project, the applicant should attach written assurances of cooperation and availability to the application, or send them under separate cover. To ensure sufficient time to bring them to the Board's attention, letters of support sent under separate cover must be received by March 15, 2004.

4. Budget Narrative

The budget narrative should provide the basis for the computation of all project-related costs. When the proposed project would be partially supported by grants from other funding sources, applicants should make clear what costs would be covered by those other grants. Additional background or schedules may be attached if they are essential to obtaining a clear understanding of the proposed budget. Numerous and lengthy appendices are strongly discouraged.

The budget narrative should cover the costs of all components of the project and clearly identify costs attributable to the project evaluation. Under OMB grant guidelines incorporated by reference in this Guideline, grant funds may not be used to purchase alcoholic beverages.

a. Justification of Personnel Compensation

The applicant should set forth the percentages of time to be devoted by the individuals who would staff the proposed project, the annual salary of each of those persons, and the number of work days per year used for calculating the percentages of time or daily rates of those individuals. The applicant should explain any deviations from current rates or established written organizational policies. If grant funds are requested to pay the salary and related costs for a current employee of a court or other unit of government, the applicant should explain why this would not constitute a supplantation of State or local funds in violation of 42 U.S.C. 10706(d)(1). An acceptable

explanation may be that the position to be filled is a new one established in conjunction with the project or that the grant funds would support only the portion of the employee's time that would be dedicated to new or additional duties related to the project.

b. Fringe Benefit Computation

The applicant should provide a description of the fringe benefits provided to employees. If percentages are used, the authority for such use should be presented, as well as a description of the elements included in the determination of the percentage rate.

c. Consultant/Contractual Services and Honoraria

The applicant should describe the tasks each consultant would perform, the estimated total amount to be paid to each consultant, the basis for compensation rates (*e.g.*, the number of days multiplied by the daily consultant rates), and the method for selection. Rates for consultant services must be set in accordance with section IX.I.2.c. Prior written Institute approval is required for any consultant rate in excess of $300 per day; Institute funds may not be used to pay a consultant more than $900 per day. Honorarium payments must be justified in the same manner as consultant payments.

d. Travel

Transportation costs and per diem rates must comply with the policies of the applicant organization. If the applicant does not have an established travel policy, then travel rates must be consistent with those established by the Institute or the Federal Government. (A copy of the Institute's travel policy is available upon request.) The budget narrative should include an explanation of the rate used, including the components of the per diem rate and the basis for the estimated transportation expenses. The purpose of the travel should also be included in the narrative.

e. Equipment

Grant funds may be used to purchase only the equipment necessary to demonstrate a new technological application in a court or that is otherwise essential to accomplishing the objectives of the project. Equipment purchases to support basic court operations ordinarily will not be approved. The applicant should describe the equipment to be purchased or leased and explain why the acquisition of that equipment is essential to accomplish the project's goals and objectives. The narrative should clearly identify which equipment is to be leased and which is to be purchased. The method of procurement should also be described. Purchases of automated data processing equipment must comply with section IX.I.2.b.

f. Supplies

The applicant should provide a general description of the supplies necessary to accomplish the goals and objectives of the grant. In addition, the applicant should provide the basis for the amount requested for this expenditure category.

g. Construction

Construction expenses are prohibited except for the limited purposes set forth in section VIII.A.16.b. Any allowable construction or renovation expense should be described in detail in the budget narrative.

h. Telephone

Applicants should include anticipated telephone charges, distinguishing between monthly charges and long distance charges in the budget narrative. Also, applicants should provide the basis used to calculate the monthly and long distance estimates.

i. Postage

Anticipated postage costs for project-related mailings, including distribution of the final product(s), should be described in the budget narrative. The cost of special mailings, such as for a survey or for announcing a workshop, should be distinguished from routine operational mailing costs. The bases for all postage estimates should be included in the budget narrative.

j. Printing/Photocopying

Anticipated costs for printing or photocopying project documents, reports, and publications should be included in the budget narrative, along with the bases used to calculate these estimates.

k. Indirect Costs

Recoverable indirect costs are limited to no more than 75% of a grantee's direct personnel costs (salaries plus fringe benefits). Grantees may apply unrecoverable indirect costs to meet their required matching contributions, including the required level of cash match. *See* sections III.L. and IX.I.4.

Applicants should describe the indirect cost rates applicable to the grant in detail. If costs often included within an indirect cost rate are charged directly (*e.g.*, a percentage of the time of senior managers to supervise project activities), the applicant should specify that these costs are not included within its approved indirect cost rate. These rates must be established in accordance with section IX.I.4. If the applicant has an indirect cost rate or allocation plan approved by any Federal granting agency, a copy of the approved rate agreement should be attached to the application.

l. Match

Courts or other units of State or local government (not including publicly supported institutions of higher education) must provide a match from private or public sources of not less than 50% of the total amount of the Institute's award. 42 U.S.C. 10705(d). At least 20% of the required match for a new grant to a court or other unit of State or local government (other than a Judicial Branch Education Technical Assistance grant) must be cash. All other grantees (except scholarship recipients and individuals receiving ''think piece'' grants) must contribute a match of 25% to a new grant; at least 10% of the required match must be cash.

The applicant should describe the source of the matching contribution and the nature of the match provided. Any additional cash and in-kind contributions to the project should be described in this section of the budget narrative as well. If in-kind match is to be provided, the applicant should describe how the amount and value of the time, services, or materials actually contributed would be documented for audit purposes. Applicants should be aware that the time spent by participants in education courses does not qualify as in-kind match.

Applicants that do not contemplate making matching contributions continuously throughout the course of the project or on a task-by-task basis must provide a schedule within 30 days after the beginning of the project period indicating at what points during the project period the matching contributions would be made. (*See* sections III.L., VIII.A.8., and IX.E.1.)

The Institute may waive the match and cash match requirements in certain circumstances. *See* section VIII.A.8.c.

5. Submission Requirements

a. Every applicant must submit an original and four copies of the application package consisting of FORM A; FORM B, if the application is from a State or local court, or a Disclosure of Lobbying Form, if the applicant is not a unit of State or local government; the Budget Forms (either FORM C or C–1); the Application Abstract; the Program

Narrative; the Budget Narrative; and any necessary appendices.

All applications must be sent by first class or overnight mail or by courier no later than February 13, 2004. A postmark or courier receipt will constitute evidence of the submission date. Please mark APPLICATION on the application package envelope and send it to: State Justice Institute, 1650 King Street, Suite 600, Alexandria, VA 22314.

Receipt of each application will be acknowledged in writing. Extensions of the deadline for submission of applications will not be granted without good cause.

b. Applicants submitting more than one application may include material that would be identical in each application in a cover letter. This material will be incorporated by reference into each application and counted against the 25-page limit for the program narrative. A copy of the cover letter should be attached to each copy of each application.

*B. ''Think Piece'' Applications*

1. Purpose and Scope

''Think pieces'' are essays of publishable quality directed to the court community. They are intended to explore emerging issues that could result in significant changes in court process or judicial administration and their implications for the future for judges, court managers, policy-makers, and the public.

2. Forms

An application for a ''think piece'' must include the same forms required for a project grant. *See* A.1. above in this section.

3. Program Narrative

The program narrative should be no longer than necessary, but must not exceed 8 double-spaced pages on 8½ by 11 inch paper. Margins must be at least 1 inch and type size must be at least 12 point and 12 cpi. The pages should be numbered. The narrative should:

a. Identify the specific Special Interest category into which the ''think piece'' would fall;

b. Describe the subject it would address;

c. Explain how the essay would advance the current state of the art or knowledge about the subject;

d. Discuss the benefits that would accrue to the State courts generally as a result of the essay's publication; and

e. Outline plans for the publication of the ''think piece,'' *e.g.*, the intended audience, and the types or titles of periodicals or journals to which it would be submitted.

4. Budget and Budget Narrative

The applicant should provide a complete budget and budget narrative conforming to the requirements set forth in A.4. above in this section; however, individuals proposing to develop ''think pieces'' are not required to provide match.

5. Submission Requirements

The submission requirements set forth in section VI.A.5 apply to all ''think piece'' applications.

*C. Continuation Grant Applications*

1. Purpose

Continuation grants are intended to support projects that carry out the same type of activities carried out under a previous grant. They are intended to enhance the specific program or service produced or established during the prior grant period. They may be used, for example, when a project is divided into two or more sequential phases, for secondary analysis of data obtained in an Institute-supported research project, or for more extensive testing of an innovative technology, procedure, or program developed with SJI grant support.

2. Limitations

The award of an initial grant to support a project does not constitute a commitment by the Institute to continue funding. For a project to be considered for continuation funding, the grantee must have completed all project tasks and met all grant requirements and conditions in a timely manner, absent extenuating circumstances or prior Institute approval of changes to the project design. Continuation grants are not intended to provide support for a project for which the grantee has underestimated the amount of time or funds needed to accomplish the project tasks. Absent extraordinary circumstances, no grant will continue for more than five years.

3. Letters of Intent

A grantee seeking a continuation grant must inform the Institute, by letter, of its intent to submit an application for such funding as soon as the need for continued funding becomes apparent but no less than 120 days before the end of the current grant period.

a. A letter of intent must be no more than 3 single-spaced pages on 8½ by 11 inch paper and contain a concise but thorough explanation of the need for continuation; an estimate of the funds to be requested; and a brief description of anticipated changes in the scope, focus, or audience of the project.

b. Within 30 days after receiving a letter of intent, Institute staff will review the proposed activities for the next project period and inform the grantee of specific issues to be addressed in the continuation application and the date by which the application must be submitted.

4. Application Format

An application for a continuation grant must include an application form, budget forms (with appropriate documentation), a project abstract conforming to the format set forth in A.2. of this section, a program narrative, a budget narrative, a Certificate of State Approval—FORM B (if the applicant is a State or local court), a Disclosure of Lobbying Activities form (from applicants other than units of State or local government), and any necessary appendices. *See* Appendix F for the application forms.

The program narrative should conform to the length and format requirements set forth in section VI.A.3. However, rather than the topics listed there, the program narrative of a continuation application should include:

a. *Project Objectives.* The applicant should clearly and concisely state what the continuation project is intended to accomplish.

b. *Need for Continuation.* The applicant should explain why continuation of the project is necessary to achieve the goals of the project, and how the continuation would benefit the participating courts or the courts community generally, by explaining, for example, how the original goals and objectives of the project would be unfulfilled if it were not continued; or how the value of the project would be enhanced by its continuation.

c. *Report of Current Project Activities.* The applicant should discuss the status of all activities conducted during the previous project period. Applicants should identify any activities that were not completed, and explain why.

d. *Evaluation Findings.* The applicant should present the key findings, impact, or recommendations resulting from the evaluation of the project, if available, and how they would be addressed during the proposed continuation. If the findings are not yet available, the applicant should provide the date by which they would be submitted to the Institute. Ordinarily, the Board will not consider an application for continuation funding until the Institute has received the evaluator's report.

e. *Tasks, Methods, Staff, and Grantee Capability.* The applicant should fully describe any changes in the tasks to be

performed, the methods to be used, the products of the project, and how and to whom those products would be disseminated, as well as any changes in the assigned staff or the grantee's organizational capacity. Applicants should include, in addition, the criteria and methods by which the proposed continuation project would be evaluated.

f. *Task Schedule.* The applicant should present a detailed task schedule and timeline for the next project period.

g. *Other Sources of Support.* The applicant should indicate why other sources of support would be inadequate, inappropriate, or unavailable.

5. Budget and Budget Narrative

a. Institute Funds

The applicant should provide a complete budget and budget narrative conforming to the requirements set forth in VI.A.4. above. Changes in the funding level requested should be discussed in terms of corresponding increases or decreases in the scope of activities or services to be rendered. In addition, the applicant should estimate the amount of grant funds that would remain unobligated at the end of the current grant period.

b. Matching Contribution

i. *State and local units of government* must provide match equaling at least 50% of the amount provided by the Institute in the first year of the project, 60% in the second year, 75% in the third year, 90% in the fourth year, and 100% in the fifth year.

For example, if the Institute awards a State court $100,000 for the first year of a grant, the court would be required to provide $50,000 in match. If the second-year grant is also $100,000, the court would be required to provide $60,000 in match. A State or local unit of government would have to provide at least 20% of the required match in the form of cash rather than in-kind support (*e.g.*, the value of staff time contributed to the project).

ii. *All other grantees* must provide match equaling at least 25% of the amount provided by the Institute in the first year of the project, 30% in the second year, 37.5% in the third year, 45% in the fourth year, and 50% in the fifth year. For example, if the Institute awards a non-profit organization $100,000 for the first year of a grant, the organization would be required to provide $25,000 in match. If the second year grant is also $100,000, the court would be required to provide $30,000 in match. A non-profit organization must provide at least 10% of the required match in the form of cash.

iii. The Institute may waive the match and cash match requirements in certain circumstances. *See* section VIII.A.8.c.

6. References to Previously Submitted Material

A continuation application should not repeat information contained in a previously approved application or other previously submitted materials, but should provide specific references to such materials where appropriate.

7. Submission Requirements

The submission requirements set forth in section VI.A.5., other than the mailing deadline, apply to continuation applications.

*D. Technical Assistance Grants*

1. Purpose and Scope

Technical Assistance Grants are awarded to State and local courts to obtain the assistance of outside experts in diagnosing, developing, and implementing a response to a particular problem in a jurisdiction.

2. Application Procedures.

For a summary of the application procedures for Technical Assistance Grants, visit the Institute's Web site (*http://www.statejustice.org*) and click On-Line Tutorials, then Technical Assistance Grant.

In lieu of formal applications, applicants for Technical Assistance Grants may submit, at any time, an original and three copies of a detailed letter describing the proposed project. Letters from an individual trial or appellate court must be signed by the presiding judge or manager of that court. Letters from the State court system must be signed by the Chief Justice or State Court Administrator.

3. Application Format

Although there is no prescribed form for the letter nor a minimum or maximum page limit, letters of application should include the following information:

a. *Need for Funding.* What is the critical need facing the court? How would the proposed technical assistance help the court meet this critical need? Why cannot State or local resources fully support the costs of the required consultant services?

b. *Project Description.* What tasks would the consultant be expected to perform, and how would they be accomplished? Which organization or individual would be hired to provide the assistance, and how was this consultant selected? If a consultant has not yet been identified, what procedures and criteria would be used to select the consultant? (Applicants are expected to follow their jurisdictions' normal procedures for procuring consultant services.) What specific tasks would the consultant(s) and court staff undertake? What is the schedule for completion of each required task and the entire project? How would the court oversee the project and provide guidance to the consultant, and who at the court would be responsible for coordinating all project tasks and submitting quarterly progress and financial status reports?

If the consultant has been identified, the applicant should provide a letter from that individual or organization documenting interest in and availability for the project, as well as the consultant's ability to complete the assignment within the proposed time frame and for the proposed cost. The consultant must agree to submit a detailed written report to the court and the Institute upon completion of the technical assistance.

c. *Likelihood of Implementation.* What steps have been or would be taken to facilitate implementation of the consultant's recommendations upon completion of the technical assistance? For example, if the support or cooperation of specific court officials or committees, other agencies, funding bodies, organizations, or a court other than the applicant would be needed to adopt the changes recommended by the consultant and approved by the court, how would they be involved in the review of the recommendations and development of the implementation plan?

d. *Support for the Project from the State Supreme Court or its Designated Agency or Council.* Written concurrence on the need for the technical assistance must be submitted. This concurrence may be a copy of SJI Form B (*See* Appendix F) signed by the Chief Justice of the State Supreme Court or the Chief Justice's designee, or a letter from the State Chief Justice or designee. The concurrence may be submitted with the applicant's letter or under separate cover prior to consideration of the application. The concurrence also must specify whether the State Supreme Court would receive, administer, and account for the grant funds, if awarded, or would designate the local court or a specified agency or council to receive the funds directly.

4. Budget and Matching State Contribution

A completed Form E, *Line-Item Budget Form* (*See* Appendix G), and budget narrative must be included with the letter requesting technical assistance. The estimated cost of the

technical assistance services should be broken down into the categories listed on the budget form rather than aggregated under the Consultant/Contractual category.

The budget narrative should provide the basis for all project-related costs, including the basis for determining the estimated consultant costs, if compensation of the consultant is required (*e.g.*, the number of days per task times the requested daily consultant rate). Applicants should be aware that consultant rates above $300 per day must be approved in advance by the Institute, and that no consultant will be paid more than $900 per day from Institute funds. In addition, the budget should provide for submission of two copies of the consultant's final report to the Institute.

As with other awards to State or local courts, match must be provided in an amount equal to at least 50% of the grant amount requested, and 20% of the match provided must be cash. The Institute may waive the match and cash match requirements in certain circumstances. *See* section VIII.A.8.c.

Recipients of Technical Assistance Grants do not have to submit an audit but must maintain appropriate documentation to support expenditures. (*See* section VIII.A.3.)

5. Submission Requirements

Letters of application may be submitted at any time; however, all of the letters received during a calendar quarter will be considered at one time. Applicants submitting letters by September 26, 2003 will be notified of the Board's decision by December 5, 2003. Those submitting letters between September 27, 2003 and January 9, 2004 will be notified of the Institute's decision by April 2, 2004; those submitting letters between January 10 and February 27, 2004 will be notified by June 11, 2004; those submitting letters between February 28 and June 4, 2004 will be notified by August 27, 2004; and those submitting letters between June 5 and September 24, 2004 will be notified by December 10, 2004.

If the support or cooperation of agencies, funding bodies, organizations, or courts other than the applicant would be needed in order for the consultant to perform the required tasks, written assurances of such support or cooperation should accompany the application letter. Support letters also may be submitted under separate cover; however, to ensure that there is sufficient time to bring them to the attention of the Board's Technical Assistance Committee, letters sent under separate cover must be received not less than three weeks prior to the Board meeting at which the technical assistance requests will be considered (*i.e.*, by October 15, 2003; and February 12, April 8, July 2, and October 14, 2004).

*E. Judicial Branch Education Technical Assistance Grants*

1. Purpose and Scope

Judicial Branch Education Technical Assistance (JBE TA) Grants are awarded to State and local courts to support: (1) the provision of expert strategic assistance designed to enable them to maintain judicial branch education programming during the current budget crisis; and/or (2) replication or modification of a model training program originally developed with Institute funds. Ordinarily, the Institute will support the adaptation of a curriculum once (*i.e.*, with one grant) in a given State.

JBE TA Grants may support consultant assistance in maintaining or developing systematic or innovative judicial branch educational programming. The assistance might include expert consultation in developing strategic plans to ensure the continued provision of judicial branch education programming despite fiscal constraints; development of improved methods for assessing the need for, and evaluating the quality and impact of, court education programs and their administration by State or local courts; faculty development; and/or topical program presentations. Such assistance may be tailored to address the needs of a particular State or local court or specific categories of court employees throughout a State and, in certain cases, in a region, if sponsored by a court.

2. Application Procedures

For a summary of the application procedures for Judicial Branch Education Technical Assistance Grants, visit the Institute's Web site (*http://www.statejustice.org*) and click on On-Line Tutorials, then Judicial Branch Education Technical Assistance Grant.

In lieu of formal applications, applicants should submit an original and three photocopies of a detailed letter.

3. Application Format

Although there is no prescribed format for the letter, or a minimum or maximum page limit, letters of application should include the following information:

a. For on-site consultant assistance:

(1) *Need for Funding.* What is the critical judicial branch educational need facing the court? How would the proposed technical assistance help the court meet this critical need? Why cannot State or local resources fully support the costs of the required consultant services?

(2) *Project Description.* What tasks would the consultant be expected to perform, and how would they be accomplished? Which organization or individual would be hired to provide the assistance, and how was this consultant selected? If a consultant has not yet been identified, what procedures and criteria would be used to select the consultant? (Applicants are expected to follow their jurisdictions' normal procedures for procuring consultant services.) What specific tasks would the consultant(s) and court staff undertake? What is the schedule for completion of each required task and the entire project? How would the court oversee the project and provide guidance to the consultant, and who at the court would be responsible for coordinating all project tasks and submitting quarterly progress and financial status reports?

If the consultant has been identified, the applicant should provide a letter from that individual or organization documenting interest in and availability for the project, as well as the consultant's ability to complete the assignment within the proposed time frame and for the proposed cost. The consultant must agree to submit a detailed written report to the court and the Institute upon completion of the technical assistance.

(3) *Likelihood of Implementation.* What steps have been or would be taken to facilitate implementation of the consultant's recommendations upon completion of the technical assistance? For example, if the support or cooperation of specific court officials or committees, other agencies, funding bodies, organizations, or a court other than the applicant would be needed to adopt the changes recommended by the consultant and approved by the court, how would they be involved in the review of the recommendations and development of the implementation plan?

(4) *Support for the Project from the State Supreme Court or its Designated Agency or Council.* Written concurrence on the need for the technical assistance must be submitted. This concurrence may be a copy of SJI Form B (*See* Appendix F) signed by the Chief Justice of the State Supreme Court or the Chief Justice's designee, or a letter from the State Chief Justice or designee. The concurrence may be submitted with the applicant's letter or under separate cover prior to consideration of the

application. The concurrence also must specify whether the State Supreme Court would receive, administer, and account for the grant funds, if awarded, or would designate the local court or a specified agency or council to receive the funds directly.

b. For adaptation of a curriculum:

(1) *Project Description.* What is the title of the model curriculum to be adapted and who originally developed it with Institute funding? Why is this education program needed at the present time? What are the project's goals? What are the learning objectives of the adapted curriculum? What program components would be implemented, and what types of modifications, if any, are anticipated in length, format, learning objectives, teaching methods, or content? Who would be responsible for adapting the model curriculum? Who would the participants be, how many would there be, how would they be recruited, and from where would they come (*e.g.*, from across the State, from a single local jurisdiction, from a multi-State region)?

(2) *Need for Funding.* Why are sufficient State or local resources unavailable to fully support the modification and presentation of the model curriculum? What is the potential for replicating or integrating the adapted curriculum in the future using State or local funds, once it has been successfully adapted and tested?

(3) *Likelihood of Implementation.* What is the proposed timeline, including the project start and end dates? On what date(s) would the judicial branch education program be presented? What process would be used to modify and present the program? Who would serve as faculty, and how were they selected? What measures would be taken to facilitate subsequent presentations of the program? (Ordinarily, an independent evaluation of a curriculum adaptation project is not required; however, the results of any evaluation should be included in the final report.)

(4) *Expressions of Interest by Judges and/or Court Personnel.* Does the proposed program have the support of the court system leadership, and of judges, court managers, and judicial branch education personnel who are expected to attend? (Applicants may demonstrate this by attaching letters of support.)

(5) *Chief Justice's Concurrence.* Local courts should attach a concurrence form signed by the Chief Justice of the State or his or her designee. (*See* Form B, Appendix F.)

4. Budget and Matching State Contribution

Applicants should attach a copy of budget Form E (*See* Appendix G) and a budget narrative (*see* A.4. in this section) that describes the basis for the computation of all project-related costs and the source of the match offered. As with other awards to State or local courts, match must be provided in an amount equal to at least 50% of the grant amount requested. Recipients of JBE TA grants are not required to provide a cash match. The Institute may waive the match requirements in certain circumstances. *See* section VIII.A.8.c.

5. Submission Requirements

Letters of application may be submitted at any time; however, all of the letters received during a calendar quarter will be considered at one time. Applicants submitting letters by September 26, 2003 will be notified of the Board's decision by December 5, 2003. Those submitting letters between September 27, 2003, and January 9, 2004 will be notified of the Institute's decision by April 2, 2004; those submitting letters between January 10 and February 27, 2004 will be notified by June 11, 2004; those submitting letters between March 1 and June 4, 2004 will be notified by August 27, 2004; and those submitting letters between June 5 and September 24, 2004 will be notified by December 10, 2004.

For curriculum adaptation requests, applicants should allow at least 60 days between the notification deadline and the date of the proposed program to allow sufficient time for needed planning. For example, a court that plans to conduct an education program in June 2004 should submit its application no later than January 9, 2004, in time for the Board's decision by April 2, 2004.

*F. Scholarships*

1. Purpose and Scope

The purposes of the Institute scholarship program are to enhance the skills, knowledge, and abilities of judges and court managers; enable State court judges and court managers to attend out-of-State educational programs sponsored by national and State providers that they could not otherwise attend because of limited State, local, and personal budgets; and provide States, judicial educators, and the Institute with evaluative information on a range of judicial and court-related education programs.

Scholarships will be granted to individuals only for the purpose of attending an educational program in another State. An applicant may apply for a scholarship for only one educational program during any one application cycle.

Scholarship funds may be used only to cover the costs of tuition, transportation, and reasonable lodging (up to $150 per night, including taxes). Transportation expenses may include round-trip coach airfare or train fare. Scholarship recipients are strongly encouraged to take advantage of excursion or other special airfares (*e.g.*, reductions offered when a ticket is purchased 21 days in advance of the travel date) when making their travel arrangements. Recipients who drive to a program site may receive $.36/mile up to the amount of the advanced-purchase round-trip airfare between their homes and the program sites. Funds to pay tuition, transportation, and lodging expenses in excess of $1,500 and other costs of attending the program—such as meals, materials, transportation to and from airports, and local transportation (including rental cars)—at the program site must be obtained from other sources or borne by the scholarship recipient. Scholarship applicants are encouraged to check other sources of financial assistance and to combine aid from various sources whenever possible.

*A scholarship is not transferable to another individual.* It may be used only for the course specified in the application unless the applicant's request to attend a different course that meets the eligibility requirements is approved in writing by the Institute. Decisions on such requests will be made within 30 days after the receipt of the request letter.

2. Eligibility Requirements

For a summary of the Scholarship award process, visit the Institute's Web site at *http://www.statejustice.org* and click on On-Line Tutorials, then Scholarship.

a. *Recipients.* Scholarships can be awarded only to full-time judges of State or local trial and appellate courts; full-time professional, State, or local court personnel with management responsibilities; and supervisory and management probation personnel in judicial branch probation offices. Senior judges, part-time judges, quasi-judicial hearing officers including referees and commissioners, administrative law judges, staff attorneys, law clerks, line staff, law enforcement officers, and other executive branch personnel are not eligible to receive a scholarship.

b. *Courses.* A Scholarship can be awarded only for a course presented in a State other than the one in which the applicant resides or works. The course

must be designed to enhance the skills of new or experienced judges and court managers; address any of the topics listed in the Institute's Special Interest categories; or be offered by a recognized graduate program for judges or court managers. The annual or mid-year meeting of a State or national organization of which the applicant is a member does not qualify as an out-of-State educational program for scholarship purposes, even though it may include workshops or other training sessions.

Applicants are encouraged not to wait for the decision on a scholarship to register for an educational program they wish to attend.

3. Forms

a. Scholarship Application—FORM S–1 (Appendix H)

The Scholarship Application requests basic information about the applicant and the educational program the applicant would like to attend. It also addresses the applicant's commitment to share the skills and knowledge gained with local court colleagues and to submit an evaluation of the program the applicant attends. The Scholarship Application must bear the original signature of the applicant. Faxed or photocopied signatures will not be accepted.

b. Scholarship Application Concurrence—FORM S–2 (Appendix H)

Judges and court managers applying for Scholarships must submit the written concurrence of the Chief Justice of the State's Supreme Court (or the Chief Justice's designee) on the Institute's Judicial Education Scholarship Concurrence form (*See* Appendix H). The signature of the presiding judge of the applicant's court cannot be substituted for that of the Chief Justice or the Chief Justice's designee. Court managers, other than elected clerks of court, also must submit a letter of support from their immediate supervisors.

4. Submission Requirements

Scholarship applications must be submitted during the periods specified below:

October 6 and December 1, 2003, for programs beginning between January 1 and March 31, 2004;

January 5 and March 1, 2004 for programs beginning between April 1 and June 30, 2004;

April 5 and May 31, 2004 for programs beginning between July 1 and September 30, 2004;

July 6 and August 30, 2004 for programs beginning between October 1 and December 31, 2004; and

October 4 and November 29, 2004 for programs beginning between January 1 and March 31, 2005.

No exceptions or extensions will be granted. Applications sent prior to the beginning of an application period will be treated as having been sent one week after the beginning of that application period. All the required items must be received for an application to be considered. If the Concurrence form or letter of support is sent separately from the application, the postmark date of the last item to be sent will be used in applying the above criteria.

All applications should be sent by mail or courier (not fax or e-mail) to: Scholarship Program Coordinator, State Justice Institute, 1650 King Street, Suite 600, Alexandria, VA 22314.

## VII. Application Review Procedures

*A. Preliminary Inquiries*

The Institute staff will answer inquiries concerning application procedures. The staff contact will be named in the Institute's letter acknowledging receipt of the application.

*B. Selection Criteria*

1. Project Grant and Continuation Grant Applications

a. All applications will be rated on the basis of the criteria set forth below. The Institute will accord the greatest weight to the following criteria:

(1) The soundness of the methodology;

(2) The demonstration of need for the project;

(3) The appropriateness of the proposed evaluation design;

(4) The applicant's management plan and organizational capabilities;

(5) The qualifications of the project's staff;

(6) The products and benefits resulting from the project, including the extent to which the project will have long-term benefits for State courts across the nation;

(7) The degree to which the findings, procedures, training, technology, or other results of the project can be transferred to other jurisdictions;

(8) The reasonableness of the proposed budget;

(9) The demonstration of cooperation and support of other agencies that may be affected by the project; and

(10) The proposed project's relationship to one of the Special Interest categories set forth in section II.A.

b. For continuation grant applications, the key findings and recommendations of evaluations and the proposed responses to those findings and recommendations also will be considered.

c. In determining which projects to support, the Institute will also consider whether the applicant is a State court, a national court support or education organization, a non-court unit of government, or other type of entity eligible to receive grants under the Institute's enabling legislation (*see* section IV.); the availability of financial assistance from other sources for the project; the amount and nature (cash and in-kind) of the applicant's match; the extent to which the proposed project would also benefit the Federal courts or help State courts enforce Federal constitutional and legislative requirements; and the level of appropriations available to the Institute in the current year and the amount expected to be available in succeeding fiscal years.

2. Technical Assistance Grant Applications

Technical Assistance Grant applications will be rated on the basis of the following criteria:

a. Whether the assistance would address a critical need of the court;

b. The soundness of the technical assistance approach to the problem;

c. The qualifications of the consultant(s) to be hired, or the specific criteria that will be used to select the consultant(s);

d. The court's commitment to act on the consultant's recommendations; and

e. The reasonableness of the proposed budget.

The Institute also will consider factors such as the level and nature of the match that would be provided, diversity of subject matter, geographic diversity, the level of appropriations available to the Institute in the current year, and the amount expected to be available in succeeding fiscal years.

3. Judicial Branch Education Technical Assistance Grant Applications

Judicial Branch Education Technical Assistance Grant applications will be rated on the basis of the following criteria:

a. For on-site consultant assistance:

(1) Whether the assistance would address a critical need of the court;

(2) The soundness of the technical assistance approach to the problem;

(3) The qualifications of the consultant(s) to be hired, or the specific criteria that will be used to select the consultant(s);

(4) The court's commitment to act on the consultant's recommendations; and

(5) The reasonableness of the proposed budget.

b. For curriculum adaptation projects:

(1) The goals and objectives of the proposed project;

(2) The need for outside funding to support the program;

(3) The appropriateness of the approach in achieving the project's educational objectives;

(4) The likelihood of effective implementation and integration of the modified curriculum into the State's or local jurisdiction's ongoing educational programming; and

(5) Expressions of interest by the judges and/or court personnel who would be directly involved in or affected by the project.

The Institute will also consider factors such as the reasonableness of the amount requested, compliance with match requirements, diversity of subject matter, geographic diversity, the level of appropriations available in the current year, and the amount expected to be available in succeeding fiscal years.

4. Scholarships

Scholarships will be awarded on the basis of:

a. The date on which the application and concurrence (and support letter, if required) were sent;

b. The unavailability of State or local funds to cover the costs of attending the program or scholarship funds from another source;

c. The absence of educational programs in the applicant's State addressing the topic(s) covered by the educational program for which the scholarship is being sought;

d. Geographic balance among the recipients;

e. The balance of scholarships among educational programs;

f. The balance of scholarships among the types of courts represented; and

g. The level of appropriations available to the Institute in the current year and the amount expected to be available in succeeding fiscal years.

The postmark or courier receipt will be used to determine the date on which the application form and other required items were sent.

*C. Review and Approval Process*

1. Project and Continuation Grant Applications

The Institute's Board of Directors will review the applications competitively. The Institute staff will prepare a narrative summary and a rating sheet assigning points for each relevant selection criterion for applications that fall within the scope of the Institute's grant program and merit serious consideration by the Board. The staff will also prepare a list of those applications that, in the judgment of the Executive Director, propose projects that lie outside the scope of the Institute's program or are not likely to merit serious consideration by the Board. The staff will present the narrative summaries, rating sheets, and list of non-reviewed papers to the Board for its review. Board committees will review application summaries within assigned program areas and prepare recommendations for the full Board. The full Board of Directors will then decide which projects it will fund. The decision to fund a project is solely that of the Board of Directors.

The Chairman of the Board will sign approved awards on behalf of the Institute.

2. Technical Assistance and Judicial Branch Education Technical Assistance Grant Applications

The Institute staff will prepare a narrative summary of each application and a rating sheet assigning points for each relevant selection criterion. A committee of the Board of Directors will review the applications competitively. The Board of Directors has delegated its authority to approve Technical Assistance and Judicial Branch Education Technical Assistance Grants to the committee established for each program.

The Chairman of the Board will sign approved awards on behalf of the Institute.

3. Scholarships

A committee of the Institute's Board of Directors will review Scholarship applications quarterly. The Board of Directors has delegated its authority to approve Scholarships to the committee established for the program.

The Chairman of the Board will sign approved awards on behalf of the Institute.

*D. Return Policy*

Unless a specific request is made, unsuccessful applications will not be returned. Applicants are advised that Institute records are subject to the provisions of the Federal Freedom of Information Act, 5 U.S.C. 552.

*E. Notification of Board Decision*

1. The Institute will send written notice to applicants concerning all Board decisions to approve, defer, or deny their respective applications. For all applications (except Scholarships), the Institute also will convey the key issues and questions that arose during the review process. A decision by the Board to deny an application may not be appealed, but it does not prohibit resubmission of a proposal based on that application in a subsequent funding cycle. The Institute will also notify the State court administrator when grants are approved by the Board to support projects that will be conducted by or involve courts in that State.

2. The Institute intends to notify each Scholarship applicant of the Board committee's decision within 30 days after the close of the relevant application period.

*F. Response to Notification of Approval*

With the exception of those approved for Scholarships, applicants have 30 days from the date of the letter notifying them that the Board has approved their application to respond to any revisions requested by the Board. If the requested revisions (or a reasonable schedule for submitting such revisions) have not been submitted to the Institute within 30 days after notification, the approval may be rescinded and the application presented to the Board for reconsideration.

**VIII. Compliance Requirements**

The State Justice Institute Act contains limitations and conditions on grants, contracts, and cooperative agreements awarded by the Institute. The Board of Directors has approved additional policies governing the use of Institute grant funds. These statutory and policy requirements are set forth below.

*A. Recipients of Project Grants*

1. Advocacy

No funds made available by the Institute may be used to support or conduct training programs for the purpose of advocating particular nonjudicial public policies or encouraging nonjudicial political activities. 42 U.S.C. 10706(b).

2. Approval of Key Staff

If the qualifications of an employee or consultant assigned to a key project staff position are not described in the application or if there is a change of a person assigned to such a position, the recipient must submit a description of the qualifications of the newly assigned person to the Institute. Prior written approval of the qualifications of the new person assigned to a key staff position must be received from the Institute before the salary or consulting fee of that person and associated costs may be paid or reimbursed from grant funds.

3. Audit

Recipients of project grants must provide for an annual fiscal audit which includes an opinion on whether the financial statements of the grantee present fairly its financial position and its financial operations are in accordance with generally accepted accounting principles. (*See* section IX.K. of the Guideline for the requirements of such audits.) Scholarship recipients and recipients of Solutions Project State Court Information Collection Grants, Judicial Branch Education Technical Assistance Grants, and Technical Assistance Grants are not required to submit an audit, but they must maintain appropriate documentation to support all expenditures.

4. Budget Revisions

Budget revisions among direct cost categories that (i) transfer grant funds to an unbudgeted cost category or (ii) individually or cumulatively exceed five percent of the approved original budget or the most recently approved revised budget require prior Institute approval.

5. Conflict of Interest

Personnel and other officials connected with Institute-funded programs must adhere to the following requirements:

a. No official or employee of a recipient court or organization shall participate personally through decision, approval, disapproval, recommendation, the rendering of advice, investigation, or otherwise in any proceeding, application, request for a ruling or other determination, contract, grant, cooperative agreement, claim, controversy, or other particular matter in which Institute funds are used, where, to his or her knowledge, he or she or his or her immediate family, partners, organization other than a public agency in which he or she is serving as officer, director, trustee, partner, or employee or any person or organization with whom he or she is negotiating or has any arrangement concerning prospective employment, has a financial interest.

b. In the use of Institute project funds, an official or employee of a recipient court or organization shall avoid any action which might result in or create the appearance of:

(1) Using an official position for private gain; or

(2) Affecting adversely the confidence of the public in the integrity of the Institute program.

c. Requests for proposals or invitations for bids issued by a recipient of Institute funds or a subgrantee or subcontractor will provide notice to prospective bidders that the contractors who develop or draft specifications, requirements, statements of work, and/or requests for proposals for a proposed procurement will be excluded from bidding on or submitting a proposal to compete for the award of such procurement.

6. Inventions and Patents

If any patentable items, patent rights, processes, or inventions are produced in the course of Institute-sponsored work, such fact shall be promptly and fully reported to the Institute. Unless there is a prior agreement between the grantee and the Institute on disposition of such items, the Institute shall determine whether protection of the invention or discovery shall be sought. The Institute will also determine how the rights in the invention or discovery, including rights under any patent issued thereon, shall be allocated and administered in order to protect the public interest consistent with ''Government Patent Policy'' (President's Memorandum for Heads of Executive Departments and Agencies, February 18, 1983, and statement of Government Patent Policy).

7. Lobbying

a. Funds awarded to recipients by the Institute shall not be used, indirectly or directly, to influence Executive Orders or similar promulgations by Federal, State or local agencies, or to influence the passage or defeat of any legislation by Federal, State or local legislative bodies. 42 U.S.C. 10706(a).

b. It is the policy of the Board of Directors to award funds only to support applications submitted by organizations that would carry out the objectives of their applications in an unbiased manner. Consistent with this policy and the provisions of 42 U.S.C. 10706, the Institute will not knowingly award a grant to an applicant that has, directly or through an entity that is part of the same organization as the applicant, advocated a position before Congress on the specific subject matter of the application.

8. Matching Requirements

All grantees other than scholarship recipients and individuals who receive ''think piece'' grants are required to provide match. *See* section III.L. for the definition of match. The amount and nature of required match depends on the type of organization receiving the grant and the duration of the Institute's support.

The grantee is responsible for ensuring that the total amount of match proposed is actually contributed. If a proposed contribution is not fully met, the Institute may reduce the award amount accordingly, in order to maintain the ratio originally provided for in the award agreement (*See* section IX.E.1.).

The Board of Directors considers the amount and nature of unrequired match contributed by applicants in making grant decisions. Cash match and non-cash match may be provided, subject to the requirements of subsections a. and b. below.

a. New Project Grants

(1) *State and local units of government.* All awards to courts or other units of State or local government (not including publicly supported institutions of higher education) require a match from private or public sources of not less than 50% of the total amount of the Institute's award. For example, if a State court or executive branch agency receives a $100,000 grant from the Institute, it must provide a $50,000 match (50% of the $100,000 awarded by SJI). With the exception of Judicial Branch Education Technical Assistance Grants, at least 20% of the required match for a new grant ($10,000 in the example) must be provided in the form of cash rather than in-kind support (*e.g.*, the value of staff time contributed to the project).

(2) *All other grantees.* All other grantees are required to contribute a match of 25% to a new SJI-funded project. For example, if a non-profit organization receives a $100,000 grant from SJI, it must provide a $25,000 match. A non-profit organization must provide at least 10% of the required match for a new grant ($2,500 in the example) in the form of cash.

b. Continuation Grants

All grantees are required to assume a greater share of project support over time.

(1) *State and local units of government.* State and local units of government are required to provide match equaling at least 50% of the amount provided by SJI in the first year of the project, 60% in the second year, 75% in the third year, 90% in the fourth year, and 100% in the fifth year. For example, if SJI awards a State court $100,000 for the first year of a grant, the court would be required to provide $50,000 in match. If the second-year grant is also $100,000, the court is required to provide $60,000 in match. A court that wishes to limit its second-year contribution to $50,000 may ask the Institute for a reduced amount, *i.e.*,

$83,333, in order to meet the 60% requirement.

(1) *All other grantees.* All other grantees are required to provide match equaling at least 25% of the amount provided by the Institute in the first year of the project, 30% in the second year, 37.5% in the third year, 45% in the fourth year, and 50% in the fifth year. For example, if the Institute awards a non-profit organization $100,000 for the first year of a grant, the organization must provide $25,000 in match. If the second-year grant is also $100,000, the grantee is required to provide $30,000 in match. An organization that wishes to limit its second-year contribution to $25,000 may ask the Institute for a reduced amount, *i.e.*, $83,333, in order to meet the 30% requirement.

c. Waiver

(2) *Match generally.*

(a) The match requirement for State and local units of government may be waived in exceptionally rare circumstances upon the request of the Chief Justice of the highest court in the State and approval by the Board of Directors. 42 U.S.C. 10705(d).

(b) The match requirement for all other grantees required to provide match may be waived in exceptionally rare circumstances upon the request of an appropriate official and approval by the Board of Directors

(2) *Cash match.* For all grantees required to provide cash match, the requirement may be waived upon the applicant's demonstration that providing the required cash match will cause the applicant a financial hardship.

(3) The Board of Directors encourages all applicants to provide the maximum amount of in-kind and cash match possible, even if a waiver is approved. The amount and nature of match are criteria in the grant selection process. *See* section VII.B.1.c.

9. Nondiscrimination

No person may, on the basis of race, sex, national origin, disability, color, or creed be excluded from participation in, denied the benefits of, or otherwise subjected to discrimination under any program or activity supported by Institute funds. Recipients of Institute funds must immediately take any measures necessary to effectuate this provision.

10. Political Activities

No recipient may contribute or make available Institute funds, program personnel, or equipment to any political party or association, or the campaign of any candidate for public or party office. Recipients are also prohibited from using funds in advocating or opposing any ballot measure, initiative, or referendum. Officers and employees of recipients shall not intentionally identify the Institute or recipients with any partisan or nonpartisan political activity associated with a political party or association, or the campaign of any candidate for public or party office. 42 U.S.C. 10706(a).

11. Products

a. Acknowledgment, Logo, and Disclaimer

(1) Recipients of Institute funds must acknowledge prominently on all products developed with grant funds that support was received from the Institute. The ''SJI'' logo must appear on the front cover of a written product, or in the opening frames of a video product, unless another placement is approved in writing by the Institute. This includes final products printed or otherwise reproduced during the grant period, as well as reprintings or reproductions of those materials following the end of the grant period. A camera-ready logo sheet is available from the Institute upon request.

(2) Recipients also must display the following disclaimer on all grant products: ''This (document, film, videotape, etc.) was developed under (grant/cooperative agreement) number SJI-(insert number) from the State Justice Institute. The points of view expressed are those of the (author(s), filmmaker(s), etc.) and do not necessarily represent the official position or policies of the State Justice Institute.''

b. Charges for Grant-Related Products/ Recovery of Costs

(1) When Institute funds fully cover the cost of developing, producing, and disseminating a product (*e.g.*, a report, curriculum, videotape, or software), the product should be distributed to the field without charge. When Institute funds only partially cover the development, production, or dissemination costs, the grantee may, with the Institute's prior written approval, recover its costs for developing, producing, and disseminating the material to those requesting it, to the extent that those costs were not covered by Institute funds or grantee matching contributions.

(2) Applicants should disclose their intent to sell grant-related products in the application. Grantees must obtain the written prior approval of the Institute of their plans to recover project costs through the sale of grant products. Written requests to recover costs ordinarily should be received during the grant period and should specify the nature and extent of the costs to be recouped, the reason that such costs were not budgeted (if the rationale was not disclosed in the approved application), the number of copies to be sold, the intended audience for the products to be sold, and the proposed sale price. If the product is to be sold for more than $25, the written request also should include a detailed itemization of costs that will be recovered and a certification that the costs were not supported by either Institute grant funds or grantee matching contributions.

(3) In the event that the sale of grant products results in revenues that exceed the costs to develop, produce, and disseminate the product, the revenue must continue to be used for the authorized purposes of the Institute-funded project or other purposes consistent with the State Justice Institute Act that have been approved by the Institute. *See* sections III.O. and IX.G. for requirements regarding project-related income realized during the project period.

c. Copyrights

Except as otherwise provided in the terms and conditions of an Institute award, a recipient is free to copyright any books, publications, or other copyrightable materials developed in the course of an Institute-supported project, but the Institute shall reserve a royalty-free, nonexclusive and irrevocable right to reproduce, publish, or otherwise use, and to authorize others to use, the materials for purposes consistent with the State Justice Institute Act.

d. Distribution

In addition to the distribution specified in the grant application, grantees shall send:

(1) Fifteen (15) copies of each final product developed with grant funds to the Institute, unless the product was developed under either a Technical Assistance or a Judicial Branch Education Technical Assistance grant, in which case submission of 2 copies is required;

(2) An electronic version of the product in .html or .pdf format to the Institute; and

(3) One copy of each final product developed with grant funds to the library established in each State to collect materials prepared with Institute support. (A list of the libraries is contained in Appendix C. Labels for these libraries are available on the

Institute's Web site, *http://www.statejustice.org.*) Grantees that develop web-based electronic products must send a hard-copy document to the SJI-designated libraries and other appropriate audiences to alert them to the availability of the Web site or electronic product. Recipients of Judicial Branch Education Technical Assistance and Technical Assistance Grants are not required to submit final products to State libraries.

(5) A press release describing the project and announcing the results to a list of national and State judicial branch organizations provided by the Institute.

e. Institute Approval

No grant funds may be obligated for publication or reproduction of a final product developed with grant funds without the written approval of the Institute. Grantees shall submit a final draft of each written product to the Institute for review and approval. The draft must be submitted at least 30 days before the product is scheduled to be sent for publication or reproduction to permit Institute review and incorporation of any appropriate changes required by the Institute. Grantees must provide for timely reviews by the Institute of videotape or CD–ROM products at the treatment, script, rough cut, and final stages of development or their equivalents.

f. Original Material

All products prepared as the result of Institute-supported projects must be originally-developed material unless otherwise specified in the award documents. Material not originally developed that is included in such products must be properly identified, whether the material is in a verbatim or extensive paraphrase format.

12. Prohibition Against Litigation Support

No funds made available by the Institute may be used directly or indirectly to support legal assistance to parties in litigation, including cases involving capital punishment.

13. Reporting Requirements

a. Recipients of Institute funds other than Scholarships must submit Quarterly Progress and Financial Status Reports within 30 days of the close of each calendar quarter (that is, no later than January 30, April 30, July 30, and October 30). Two copies of each report must be sent. The Quarterly Progress Reports shall include a narrative description of project activities during the calendar quarter, the relationship between those activities and the task schedule and objectives set forth in the approved application or an approved adjustment thereto, any significant problem areas that have developed and how they will be resolved, and the activities scheduled during the next reporting period.

b. The quarterly Financial Status Report must be submitted in accordance with section IX.H.2. of this Guideline. A final project Progress Report and Financial Status Report shall be submitted within 90 days after the end of the grant period in accordance with section IX.L.1. of this Guideline.

14. Research

a. Availability of Research Data for Secondary Analysis

Upon request, grantees must make available for secondary analysis a diskette(s) or data tape(s) containing research and evaluation data collected under an Institute grant and the accompanying code manual. Grantees may recover the actual cost of duplicating and mailing or otherwise transmitting the data set and manual from the person or organization requesting the data. Grantees may provide the requested data set in the format in which it was created and analyzed.

b. Confidentiality of Information

Except as provided by Federal law other than the State Justice Institute Act, no recipient of financial assistance from SJI may use or reveal any research or statistical information furnished under the Act by any person and identifiable to any specific private person for any purpose other than the purpose for which the information was obtained. Such information and copies thereof shall be immune from legal process, and shall not, without the consent of the person furnishing such information, be admitted as evidence or used for any purpose in any action, suit, or other judicial, legislative, or administrative proceedings.

c. Human Subject Protection

All research involving human subjects shall be conducted with the informed consent of those subjects and in a manner that will ensure their privacy and freedom from risk or harm and the protection of persons who are not subjects of the research but would be affected by it, unless such procedures and safeguards would make the research impractical. In such instances, the Institute must approve procedures designed by the grantee to provide human subjects with relevant information about the research after their involvement and to minimize or eliminate risk or harm to those subjects due to their participation.

15. State and Local Court Applications

Each application for funding from a State or local court must be approved, consistent with State law, by the State's Supreme Court, or its designated agency or council. The Supreme Court or its designee shall receive, administer, and be accountable for all funds awarded on the basis of such an application. 42 U.S.C. 10705(b)(4).

16. Supplantation and Construction

To ensure that funds are used to supplement and improve the operation of State courts, rather than to support basic court services, funds shall not be used for the following purposes:

a. To supplant State or local funds supporting a program or activity (such as paying the salary of court employees who would be performing their normal duties as part of the project, or paying rent for space which is part of the court's normal operations);

b. To construct court facilities or structures, except to remodel existing facilities or to demonstrate new architectural or technological techniques, or to provide temporary facilities for new personnel or for personnel involved in a demonstration or experimental program; or

c. Solely to purchase equipment.

17. Suspension of Funding

After providing a recipient reasonable notice and opportunity to submit written documentation demonstrating why fund termination or suspension should not occur, the Institute may terminate or suspend funding of a project that fails to comply substantially with the Act, the Guideline, or the terms and conditions of the award. 42 U.S.C. 10708(a).

18. Title to Property

At the conclusion of the project, title to all expendable and nonexpendable personal property purchased with Institute funds shall vest in the recipient court, organization, or individual that purchased the property if certification is made to and approved by the Institute that the property will continue to be used for the authorized purposes of the Institute-funded project or other purposes consistent with the State Justice Institute Act. If such certification is not made or the Institute disapproves such certification, title to all such property with an aggregate or individual value of $1,000 or more shall vest in the Institute, which will direct the disposition of the property.

*B. Recipients of Judicial Branch Education Technical Assistance and Technical Assistance Grants*

Recipients of Judicial Branch Education Technical Assistance and Technical Assistance Grants must comply with the requirements listed in section VIII.A. (except the requirements pertaining to audits in section VIII.A.3. and product dissemination in section VIII.A.11.d. and e.) and the reporting requirements below:

1. Judicial Branch Education Technical Assistance Grant Reporting Requirements

Recipients of Judicial Branch Education Technical Assistance Grants must:

a. Submit one copy of the manuals, handbooks, conference packets, or consultant's report developed under the grant at the conclusion of the grant period, along with a final report that includes any evaluation results and explains how the grantee intends to present the educational program in the future and/or implement the consultant's recommendations, as well as two copies of the consultant's report; and

b. Complete a Technical Assistance Evaluation Form at the conclusion of the grant period, if appropriate.

2. Technical Assistance Grant Reporting Requirements

Recipients of Technical Assistance Grants must:

a. Submit to the Institute one copy of a final report that explains how it intends to act on the consultant's recommendations, as well as two copies of the consultant's written report; and

b. Complete a Technical Assistance Evaluation Form at the conclusion of the grant period.

*C. Scholarship Recipients*

1. Scholarship recipients are responsible for disseminating the information received from the course to their court colleagues locally and, if possible, throughout the State (*e.g.*, by developing a formal seminar, circulating the written material, or discussing the information at a meeting or conference).

Recipients also must submit to the Institute a certificate of attendance at the program, an evaluation of the educational program they attended, and a copy of the notice of any scholarship funds received from other sources. A copy of the evaluation must be sent to the Chief Justice of the Scholarship recipient's State. A State or local jurisdiction may impose additional requirements on scholarship recipients.

2. To receive the funds authorized by a scholarship award, recipients must submit a Scholarship Payment Voucher (Form S3) together with a tuition statement from the program sponsor, a lodging receipt, and a transportation fare receipt (or statement of the driving mileage to and from the recipient's home to the site of the educational program).

Scholarship Payment Vouchers should be submitted within 90 days after the end of the course which the recipient attended.

3. Scholarship recipients are encouraged to check with their tax advisors to determine whether the scholarship constitutes taxable income under Federal and State law.

**IX. Financial Requirements**

*A. Purpose*

The purpose of this section is to establish accounting system requirements and offer guidance on procedures to assist all grantees, subgrantees, contractors, and other organizations in:

1. Complying with the statutory requirements for the award, disbursement, and accounting of funds;

2. Complying with regulatory requirements of the Institute for the financial management and disposition of funds;

3. Generating financial data to be used in planning, managing, and controlling projects; and

4. Facilitating an effective audit of funded programs and projects.

*B. References*

Except where inconsistent with specific provisions of this Guideline, the following circulars are applicable to Institute grants and cooperative agreements under the same terms and conditions that apply to Federal grantees. The circulars supplement the requirements of this section for accounting systems and financial record-keeping and provide additional guidance on how these requirements may be satisfied. (Circulars may be obtained from OMB by calling 202–395–3080 or visiting the OMB Web site at *http://www.whitehouse.gov/OMB.*)

1. *Office of Management and Budget (OMB) Circular A–21,* Cost Principles for Educational Institutions.

2. *Office of Management and Budget (OMB) Circular A–87,* Cost Principles for State and Local Governments.

3. *Office of Management and Budget (OMB) Circular A–88 (revised),* Indirect Cost Rates, Audit and Audit Follow-up at Educational Institutions.

4. *Office of Management and Budget (OMB) Circular A–102,* Uniform Administrative Requirements for Grants-in-Aid to State and Local Governments.

5. *Office of Management and Budget (OMB) Circular A–110,* Grants and Agreements with Institutions of Higher Education, Hospitals and Other Non-Profit Organizations.

6. *Office of Management and Budget (OMB) Circular A–122,* Cost Principles for Non-profit Organizations.

7. *Office of Management and Budget (OMB) Circular A–128,* Audits of State and Local Governments.

8. *Office of Management and Budget (OMB) Circular A–133,* Audits of Institutions of Higher Education and Other Non-profit Institutions.

*C. Supervision and Monitoring Responsibilities*

1. Grantee Responsibilities

All grantees receiving awards from the Institute are responsible for the management and fiscal control of all funds. Responsibilities include accounting for receipts and expenditures, maintaining adequate financial records, and refunding expenditures disallowed by audits.

2. Responsibilities of State Supreme Court

a. Each application for funding from a State or local court must be approved, consistent with State law, by the State's Supreme Court, or its designated agency or council. (*See* section III.F.)

b. The State Supreme Court or its designee shall receive all Institute funds awarded to such courts; be responsible for assuring proper administration of Institute funds; and be responsible for all aspects of the project, including proper accounting and financial record-keeping by the subgrantee. These responsibilities include:

(1) R*eviewing Financial Operations.* The State Supreme Court or its designee should be familiar with, and periodically monitor, its subgrantees' financial operations, records system, and procedures. Particular attention should be directed to the maintenance of current financial data.

(2) *Recording Financial Activities.* The subgrantee's grant award or contract obligation, as well as cash advances and other financial activities, should be recorded in the financial records of the State Supreme Court or its designee in summary form. Subgrantee expenditures should be recorded on the books of the State Supreme Court OR evidenced by report forms duly filed by the subgrantee. Matching contributions provided by subgrantees should likewise be recorded, as should any project income resulting from program operations.

(3) *Budgeting and Budget Review.* The State Supreme Court or its designee should ensure that each subgrantee prepares an adequate budget as the basis for its award commitment. The State Supreme Court should maintain the detail of each project budget on file.

(4) *Accounting for Match.* The State Supreme Court or its designee will ensure that subgrantees comply with the match requirements specified in this Guideline (*See* section VIII.A.8.).

(5) *Audit Requirement.* The State Supreme Court or its designee is required to ensure that subgrantees meet the necessary audit requirements set forth by the Institute (*See* sections K. below and VIII.A.3.)

(6) *Reporting Irregularities.* The State Supreme Court, its designees, and its subgrantees are responsible for promptly reporting to the Institute the nature and circumstances surrounding any financial irregularities discovered.

*D. Accounting System*

The grantee is responsible for establishing and maintaining an adequate system of accounting and internal controls and for ensuring that an adequate system exists for each of its subgrantees and contractors. An acceptable and adequate accounting system:

1. Properly accounts for receipt of funds under each grant awarded and the expenditure of funds for each grant by category of expenditure (including matching contributions and project income);
2. Assures that expended funds are applied to the appropriate budget category included within the approved grant;
3. Presents and classifies historical costs of the grant as required for budgetary and evaluation purposes;
4. Provides cost and property controls to assure optimal use of grant funds;
5. Is integrated with a system of internal controls adequate to safeguard the funds and assets covered, check the accuracy and reliability of the accounting data, promote operational efficiency, and assure conformance with any general or special conditions of the grant;
6. Meets the prescribed requirements for periodic financial reporting of operations; and
7. Provides financial data for planning, control, measurement, and evaluation of direct and indirect costs.

*E. Total Cost Budgeting and Accounting*

Accounting for all funds awarded by the Institute must be structured and executed on a total project cost basis. That is, total project costs, including Institute funds, State and local matching shares, and any other fund sources included in the approved project budget serve as the foundation for fiscal administration and accounting. Grant applications and financial reports require budget and cost estimates on the basis of total costs.

1. Timing of Matching Contributions

Matching contributions need not be applied at the exact time of the obligation of Institute funds. Ordinarily, the full matching share must be obligated during the award period; however, with the written permission of the Institute, contributions made following approval of the grant by the Institute's Board of Directors but before the beginning of the grant may be counted as match. Grantees that do not contemplate making matching contributions continuously throughout the course of a project, or on a task-by-task basis, are required to submit a schedule within 30 days after the beginning of the project period indicating at what points during the project period the matching contributions will be made. If a proposed cash or in-kind match is not fully met, the Institute may reduce the award amount accordingly to maintain the ratio of grant funds to matching funds stated in the award agreement.

2. Records for Match

All grantees must maintain records which clearly show the source, amount, and timing of all matching contributions. In addition, if a project has included, within its approved budget, contributions which exceed the required matching portion, the grantee must maintain records of those contributions in the same manner as it does Institute funds and required matching shares. For all grants made to State and local courts, the State Supreme Court has primary responsibility for grantee/subgrantee compliance with the requirements of this section. (*See* section IX.C.2. above.)

*F. Maintenance and Retention of Records*

All financial records, including supporting documents, statistical records, and all other information pertinent to grants, subgrants, cooperative agreements, or contracts under grants, must be retained by each organization participating in a project for at least three years for purposes of examination and audit. State Supreme Courts may impose record retention and maintenance requirements in addition to those prescribed in this section.

1. Coverage

The retention requirement extends to books of original entry, source documents supporting accounting transactions, the general ledger, subsidiary ledgers, personnel and payroll records, canceled checks, and related documents and records. Source documents include copies of all grant and subgrant awards, applications, and required grantee/subgrantee financial and narrative reports. Personnel and payroll records shall include the time and attendance reports for all individuals reimbursed under a grant, subgrant or contract, whether they are employed full-time or part-time. Time and effort reports are required for consultants.

2. Retention Period

The three-year retention period starts from the date of the submission of the final expenditure report.

3. Maintenance

Grantees and subgrantees are expected to see that records of different fiscal years are separately identified and maintained so that requested information can be readily located. Grantees and subgrantees are also obligated to protect records adequately against fire or other damage.

When records are stored away from the grantee's/subgrantee's principal office, a written index of the location of stored records should be on hand, and ready access should be assured.

4. Access

Grantees and subgrantees must give any authorized representative of the Institute access to and the right to examine all records, books, papers, and documents related to an Institute grant.

*G. Project-Related Income*

Records of the receipt and disposition of project-related income must be maintained by the grantee in the same manner as required for the project funds that gave rise to the income and must be reported to the Institute. (*See* section IX.H.2. below.) The policies governing the disposition of the various types of project-related income are listed below.

1. Interest

A State and any agency or instrumentality of a State, including institutions of higher education and hospitals, shall not be held accountable for interest earned on advances of project funds. When funds are awarded to subgrantees through a State, the subgrantees are not held accountable for interest earned on advances of project funds. Local units of government and

nonprofit organizations that are grantees must refund any interest earned. Grantees shall ensure minimum balances in their respective grant cash accounts.

2. Royalties

The grantee/subgrantee may retain all royalties received from copyrights or other works developed under projects or from patents and inventions, unless the terms and conditions of the grant provide otherwise.

3. Registration and Tuition Fees

Registration and tuition fees may be considered as cash match with the prior written approval of the Institute. Estimates of registration and tuition fees, and any expenses to be offset by the fees, should be included in the application budget forms and narrative.

4. Income From the Sale of Grant Products

If the sale of products occurs during the project period, the income may be treated as cash match with the prior written approval of the Institute. The costs and income generated by the sales must be reported on the Quarterly Financial Status Reports and documented in an auditable manner. Whenever possible, the intent to sell a product should be disclosed in the application or reported to the Institute in writing once a decision to sell products has been made. The grantee must request approval to recover its product development, reproduction, and dissemination costs as specified in section VIII.A.11.b.

5. Other

Other project income shall be treated in accordance with disposition instructions set forth in the grant's terms and conditions.

*H. Payments and Financial Reporting Requirements*

1. Payment of Grant Funds

The procedures and regulations set forth below are applicable to all Institute grant funds and grantees.

a. *Request for Advance or Reimbursement of Funds.* Grantees will receive funds on a ''check-issued'' basis. Upon receipt, review, and approval of a Request for Advance or Reimbursement by the Institute, a check will be issued directly to the grantee or its designated fiscal agent. A request must be limited to the grantee's immediate cash needs. The Request for Advance or Reimbursement, along with the instructions for its preparation, will be included in the official Institute award package.

b. *Continuation Awards.* For purposes of submitting Requests for Advance or Reimbursement, recipients of continuation grants should treat each grant as a new project and number the requests accordingly (*i.e.*, on a grant rather than a project basis). For example, the first request for payment from a continuation grant would be number 1, the second number 2, etc. (*See* Appendix B, Answers to Grantees' Frequently Asked Questions, for further guidance.)

c. *Termination of Advance and Reimbursement Funding.* When a grantee organization receiving cash advances from the Institute:

(1) Demonstrates an unwillingness or inability to attain program or project goals, or to establish procedures that will minimize the time elapsing between cash advances and disbursements, or cannot adhere to guideline requirements or special conditions;

(2) Engages in the improper award and administration of subgrants or contracts; or

(3) Is unable to submit reliable and/or timely reports; the Institute may terminate advance financing and require the grantee organization to finance its operations with its own working capital. Payments to the grantee shall then be made by check to reimburse the grantee for actual cash disbursements. In the event the grantee continues to be deficient, the Institute may suspend reimbursement payments until the deficiencies are corrected.

d. *Principle of Minimum Cash on Hand.* Grantees should request funds based upon immediate disbursement requirements. Grantees should time their requests to ensure that cash on hand is the minimum needed for disbursements to be made immediately or within a few days.

2. Financial Reporting

a. *General Requirements.* To obtain financial information concerning the use of funds, the Institute requires that grantees/subgrantees submit timely reports for review.

b. Two copies of the Financial Status Report are required from all grantees, other than scholarship recipients, for each active quarter on a calendar-quarter basis. This report is due within 30 days after the close of the calendar quarter. It is designed to provide financial information relating to Institute funds, State and local matching shares, project income, and any other sources of funds for the project, as well as information on obligations and outlays. A copy of the Financial Status Report, along with instructions for its preparation, is included in each official Institute Award package. If a grantee requests substantial payments for a project prior to the completion of a given quarter, the Institute may request a brief summary of the amount requested, by object class, to support the Request for Advance or Reimbursement.

c. *Additional Requirements for Continuation Grants.* Grantees receiving continuation grants should number their quarterly Financial Status Reports on a grant rather than a project basis. For example, the first quarterly report for a continuation grant award should be number 1, the second number 2, etc.

3. Consequences of Non-Compliance With Submission Requirement

Failure of the grantee to submit required financial and progress reports may result in suspension or termination of grant payments.

*I. Allowability of Costs*

1. General

Except as may be otherwise provided in the conditions of a particular grant, cost allowability is determined in accordance with the principles set forth in *OMB Circulars A–21,* Cost Principles Applicable to Grants and Contracts with Educational Institutions; *A–87,* Cost Principles for State and Local Governments; and *A–122,* Cost Principles for Non-profit Organizations. No costs may be recovered to liquidate obligations incurred after the approved grant period. Circulars may be obtained from OMB by calling 202–395–3080 or visiting the OMB Web site at *http://www.whitehouse.gov/OMB.*

2. Costs Requiring Prior Approval

a. *Pre-agreement Costs.* The written prior approval of the Institute is required for costs considered necessary but which occur prior to the start date of the project period.

b. *Equipment.* Grant funds may be used to purchase or lease only that equipment essential to accomplishing the goals and objectives of the project. The written prior approval of the Institute is required when the amount of automated data processing (ADP) equipment to be purchased or leased exceeds $10,000 or software to be purchased exceeds $3,000.

c. *Consultants.* The written prior approval of the Institute is required when the rate of compensation to be paid a consultant exceeds $300 a day. Institute funds may not be used to pay a consultant more than $900 per day.

d. *Budget Revisions.* Budget revisions among direct cost categories that (i) transfer grant funds to an unbudgeted

cost category or (ii) individually or cumulatively exceed five percent (5%) of the approved original budget or the most recently approved revised budget require prior Institute approval. *See* section X.A.1.

3. Travel Costs

Transportation and per diem rates must comply with the policies of the grantee. If the grantee does not have an established written travel policy, then travel rates must be consistent with those established by the Institute or the Federal Government. Institute funds may not be used to cover the transportation or per diem costs of a member of a national organization to attend an annual or other regular meeting of that organization.

4. Indirect Costs

These are costs of an organization that are not readily assignable to a particular project but are necessary to the operation of the organization and the performance of the project. The cost of operating and maintaining facilities, depreciation, and administrative salaries are examples of the types of costs that are usually treated as indirect costs. Although the Institute's policy requires all costs to be budgeted directly, it will accept indirect costs if a grantee has an indirect cost rate approved by a Federal agency as set forth below. However, recoverable indirect costs are limited to no more than 75% of a grantee's direct personnel costs (salaries plus fringe benefits). Grantees may apply unrecoverable indirect costs to meet their required matching contributions, including the required level of cash match. *See* sections III.L. and VI.A.4.k.

a. *Approved Plan Available.*

(1) A copy of an indirect cost rate agreement or allocation plan approved for a grantee during the preceding two years by any Federal granting agency on the basis of allocation methods substantially in accord with those set forth in the applicable cost circulars must be submitted to the Institute.

(2) Where flat rates are accepted in lieu of actual indirect costs, grantees may not also charge expenses normally included in overhead pools, *e.g.*, accounting services, legal services, building occupancy and maintenance, etc., as direct costs.

b. *Establishment of Indirect Cost Rates.* To be reimbursed for indirect costs, a grantee must first establish an appropriate indirect cost rate. To do this, the grantee must prepare an indirect cost rate proposal and submit it to the Institute within three months after the start of the grant period to assure recovery of the full amount of allowable indirect costs. The rate must be developed in accordance with principles and procedures appropriate to the type of grantee institution involved as specified in the applicable OMB Circular.

c. *No Approved Plan.* If an indirect cost proposal for recovery of indirect costs is not submitted to the Institute within three months after the start of the grant period, indirect costs will be irrevocably disallowed for all months prior to the month that the indirect cost proposal is received.

*J. Procurement and Property Management Standards*

1. Procurement Standards

For State and local governments, the Institute has adopted the standards set forth in Attachment O of OMB Circular A–102. Institutions of higher education, hospitals, and other non-profit organizations will be governed by the standards set forth in Attachment O of OMB Circular A–110.

2. Property Management Standards

The property management standards as prescribed in Attachment N of *OMB Circulars A–102* and *A–110* apply to all Institute grantees and subgrantees except as provided in section VIII.A.18. All grantees/subgrantees are required to be prudent in the acquisition and management of property with grant funds. If suitable property required for the successful execution of projects is already available within the grantee or subgrantee organization, expenditures of grant funds for the acquisition of new property will be considered unnecessary.

*K. Audit Requirements*

1. Implementation

Each recipient of a Project Grant (other than a State court receiving an information collection grant in connection with the Solutions Project) must provide for an annual fiscal audit. This requirement also applies to a State or local court receiving a subgrant from the State Supreme Court. The audit may be of the entire grantee or subgrantee organization or of the specific project funded by the Institute. Audits conducted in accordance with the Single Audit Act of 1984 and *OMB Circular A–128,* or *OMB Circular A–133,* will satisfy the requirement for an annual fiscal audit. The audit must be conducted by an independent Certified Public Accountant, or a State or local agency authorized to audit government agencies. Grantees must send two copies of the audit report to the Institute. Grantees that receive funds from a Federal agency and satisfy audit requirements of the cognizant Federal agency must submit two copies of the audit report prepared for that Federal agency to the Institute in order to satisfy the provisions of this section.

2. Resolution and Clearance of Audit Reports

Timely action on recommendations by responsible management officials is an integral part of the effectiveness of an audit. Each grantee must have policies and procedures for acting on audit recommendations by designating officials responsible for: follow-up; maintaining a record of the actions taken on recommendations and time schedules; responding to and acting on audit recommendations; and submitting periodic reports to the Institute on recommendations and actions taken.

3. Consequences of Non-Resolution of Audit Issues

Ordinarily, the Institute will not make a new grant award to an applicant that has an unresolved audit report involving Institute awards. Failure of the grantee to resolve audit questions may also result in the suspension or termination of payments for active Institute grants to that organization.

*L. Close-Out of Grants*

1. Grantee Close-Out Requirements

Within 90 days after the end date of the grant or any approved extension thereof (*See* section IX.L.2. below), the following documents must be submitted to the Institute by grantees (other than scholarship recipients):

a. *Financial Status Report.* The final report of expenditures must have no unliquidated obligations and must indicate the exact balance of unobligated funds. Any unobligated/unexpended funds will be deobligated from the award by the Institute. Final payment requests for obligations incurred during the award period must be submitted to the Institute prior to the end of the 90-day close-out period. Grantees on a check-issued basis, who have drawn down funds in excess of their obligations/expenditures, must return any unused funds as soon as it is determined that the funds are not required. In no case should any unused funds remain with the grantee beyond the submission date of the final Financial Status Report.

b. *Final Progress Report.* This report should describe the project activities during the final calendar quarter of the project and the close-out period, including to whom project products

have been disseminated; provide a summary of activities during the entire project; specify whether all the objectives set forth in the approved application or an approved adjustment have been met and, if any of the objectives have not been met, explain why not; and discuss what, if anything, could have been done differently that might have enhanced the impact of the project or improved its operation.

These reporting requirements apply at the conclusion of every grant other than a scholarship, even when the project will continue under a continuation grant.

2. Extension of Close-Out Period

Upon the written request of the grantee, the Institute may extend the close-out period to assure completion of the grantee's close-out requirements. Requests for an extension must be submitted at least 14 days before the end of the close-out period and must explain why the extension is necessary and what steps will be taken to assure that all the grantee's responsibilities will be met by the end of the extension period.

**X. Grant Adjustments**

All requests for programmatic or budgetary adjustments requiring Institute approval must be submitted by the project director in a timely manner (ordinarily 30 days prior to the implementation of the adjustment being requested). All requests for changes from the approved application will be carefully reviewed for both consistency with this Guideline and the enhancement of grant goals and objectives.

*A. Grant Adjustments Requiring Prior Written Approval*

There are several types of grant adjustments that require the prior written approval of the Institute. Examples of these adjustments include:

1. Budget revisions among direct cost categories that (a) transfer grant funds to an unbudgeted cost category or (b) individually or cumulatively exceed five percent (5%) of the approved original budget or the most recently approved revised budget. *See* section IX.I.2.d.

For continuation grants, funds from the original award may be used during the new grant period and funds awarded through a continuation grant may be used to cover project-related expenditures incurred during the original award period, with the prior written approval of the Institute.

2. A change in the scope of work to be performed or the objectives of the project (*see* D. below in this section).

3. A change in the project site.

4. A change in the project period, such as an extension of the grant period and/or extension of the final financial or progress report deadline (*see* E. below).

5. Satisfaction of special conditions, if required.

6. A change in or temporary absence of the project director (*see* F. and G. below).

7. The assignment of an employee or consultant to a key staff position whose qualifications were not described in the application, or a change of a person assigned to a key project staff position (*See* section VIII.A.2.).

8. A change in or temporary absence of the person responsible for managing and reporting on the grant's finances.

9. A change in the name of the grantee organization.

10. A transfer or contracting out of grant-supported activities (*See* H. below).

11. A transfer of the grant to another recipient.

12. Preagreement costs (*See* section IX.I.2.a.).

13. The purchase of automated data processing equipment and software (*See* section IX.I.2.b.).

14. Consultant rates (*See* section IX.I.2.c.).

15. A change in the nature or number of the products to be prepared or the manner in which a product would be distributed.

*B. Requests for Grant Adjustments*

All grantees must promptly notify their SJI program managers, in writing, of events or proposed changes that may require adjustments to the approved project design. In requesting an adjustment, the grantee must set forth the reasons and basis for the proposed adjustment and any other information the program manager determines would help the Institute's review.

*C. Notification of Approval/Disapproval*

If the request is approved, the grantee will be sent a Grant Adjustment signed by the Executive Director or his designee. If the request is denied, the grantee will be sent a written explanation of the reasons for the denial.

*D. Changes in the Scope of the Grant*

Major changes in scope, duration, training methodology, or other significant areas must be approved in advance by the Institute. A grantee may make minor changes in methodology, approach, or other aspects of the grant to expedite achievement of the grant's objectives with subsequent notification of the SJI program manager.

*E. Date Changes*

A request to change or extend the grant period must be made at least 30 days in advance of the end date of the grant. A revised task plan should accompany a request for a no-cost extension of the grant period, along with a revised budget if shifts among budget categories will be needed. A request to change or extend the deadline for the final financial report or final progress report must be made at least 14 days in advance of the report deadline (*See* section IX.L.2.).

*F. Temporary Absence of the Project Director*

Whenever an absence of the project director is expected to exceed a continuous period of one month, the plans for the conduct of the project director's duties during such absence must be approved in advance by the Institute. This information must be provided in a letter signed by an authorized representative of the grantee/subgrantee at least 30 days before the departure of the project director, or as soon as it is known that the project director will be absent. The grant may be terminated if the Institute does not approve arrangements in advance.

*G. Withdrawal of/Change in Project Director*

If the project director relinquishes or expects to relinquish active direction of the project, the Institute must be notified immediately. In such cases, if the grantee/subgrantee wishes to terminate the project, the Institute will forward procedural instructions upon notification of such intent. If the grantee wishes to continue the project under the direction of another individual, a statement of the candidate's qualifications should be sent to the Institute for review and approval. The grant may be terminated if the Institute does not approve the qualifications of the proposed individual in advance.

*A.Transferring or Contracting Out of Grant-Supported Activities*

No principal activity of a grant-supported project may be transferred or contracted out to another organization without specific prior approval by the Institute. All such arrangements must be formalized in a contract or other written agreement between the parties involved. Copies of the proposed contract or agreement must be submitted for prior approval of the Institute at the earliest possible time. The contract or agreement

must state, at a minimum, the activities to be performed, the time schedule, the policies and procedures to be followed, the dollar limitation of the agreement, and the cost principles to be followed in determining what costs, both direct and indirect, will be allowed. The contract or other written agreement must not affect the grantee's overall responsibility for the direction of the project and accountability to the Institute.

## State Justice Institute Board of Directors

Robert A. Miller, Chairman, Chief Justice (ret.), Supreme Court of South Dakota, Pierre, SD.

Joseph F. Baca, Vice-Chairman, Justice (ret.), New Mexico Supreme Court, Santa Fe, NM.

Sandra A. O'Connor, Secretary, States Attorney of Baltimore County, Towson, MD.

Keith McNamara, Esq., Executive Committee Member, McNamara & McNamara, Columbus, OH.

Terrence B. Adamson, Esq., Executive Vice-President, The National Geographic Society, Washington, DC.

Robert N. Baldwin, State Court Administrator, Supreme Court of Virginia, Richmond, VA.

Carlos R. Garza, Esq., Administrative Judge (ret.), Round Rock, TX.

Sophia H. Hall, Administrative Presiding Judge, Circuit Court of Cook County, Chicago, IL.

Tommy Jewell, Presiding Children's Court Judge, Albuquerque, NM.

Arthur A. McGiverin, Chief Justice (ret.), Supreme Court of Iowa, Ottumwa, IA.

Florence K. Murray, Justice (ret.), Supreme Court of Rhode Island, Providence, RI.

David I. Tevelin, Executive Director (ex officio).

**David I. Tevelin,**

*Executive Director.*

## Appendix A—Recommendations to Grant Writers

Over the past 17 years, the Institute staff has reviewed almost 4,000 proposals. On the basis of those reviews, inquiries from applicants, and the views of the Board, the Institute offers the following recommendations to help potential applicants present workable, understandable proposals that can meet the funding criteria set forth in this Guideline.

The Institute suggests that applicants make certain that they address the questions and issues set forth below when preparing an application. Applications should, however, be presented in the format specified in section VI. of the Guideline.

### 1. What Is the Subject or Problem You Wish To Address?

Describe the subject or problem and how it affects the courts and the public. Discuss how your approach will improve the situation or advance the state of the art or knowledge, and explain why it is the most appropriate approach to take. When statistics or research findings are cited to support a statement or position, the source of the citation should be referenced in a footnote or a reference list.

### 2. What Do You Want to Do?

Explain the goal(s) of the project in simple, straightforward terms. The goals should describe the intended consequences or expected overall effect of the proposed project (*e.g.*, to enable judges to sentence drug-abusing offenders more effectively, or to dispose of civil cases within 24 months), rather than the tasks or activities to be conducted (*e.g.*, hold 3 training sessions, or install a new computer system).

To the greatest extent possible, an applicant should avoid a specialized vocabulary that is not readily understood by the general public. Technical jargon does not enhance a paper, nor does a clever but uninformative title.

### 3. How Will You Do It?

Describe the methodology carefully so that what you propose to do and how you would do it are clear. All proposed tasks should be set forth so that a reviewer can see a logical progression of tasks, and relate those tasks directly to the accomplishment of the project's goal(s). When in doubt about whether to provide a more detailed explanation or to assume a particular level of knowledge or expertise on the part of the reviewers, provide the additional information. A description of project tasks also will help identify necessary budget items. All staff positions and project costs should relate directly to the tasks described. The Institute encourages applicants to attach letters of cooperation and support from the courts and related agencies that will be involved in or directly affected by the proposed project.

### 4. How Will You Know It Works?

Include an evaluation component that will determine whether the proposed training, procedure, service, or technology accomplished the objectives it was designed to meet. Applications should present the criteria that will be used to evaluate the project's effectiveness; identify program elements that will require further modification; and describe how the evaluation will be conducted, when it will occur during the project period, who will conduct it, and what specific measures will be used. In most instances, the evaluation should be conducted by persons not connected with the implementation of the procedure, training, service, or technique, or the administration of the project.

The Institute has also prepared a more thorough list of recommendations to grant writers regarding the development of project evaluation plans. Those recommendations are available from the Institute upon request.

### 5. How Will Others Find Out About It?

Include a plan to disseminate the results of the training, research, or demonstration beyond the jurisdictions and individuals directly affected by the project. The plan should identify the specific methods that will be used to inform the field about the project, such as the publication of law review or journal articles, or the distribution of key materials. A statement that a report or research findings ''will be made available to'' the field is not sufficient. The specific means of distribution or dissemination as well as the types of recipients should be identified. Reproduction and dissemination costs are allowable budget items.

### 6. What Are the Specific Costs Involved?

The budget in an application should be presented clearly. Major budget categories such as personnel, benefits, travel, supplies, equipment, and indirect costs should be identified separately. The components of ''Other'' or ''Miscellaneous'' items should be specified in the application budget narrative, and should not include set-asides for undefined contingencies.

### 7. What, if Any, Match Is Being Offered?

Courts and other units of State and local government (not including publicly-supported institutions of higher education) are required to contribute a match of at least 50 percent of the funds requested from the Institute for a new grant. Except in the case of Judicial Branch Education Technical Assistance grants, at least 20% of the required match must be in the form of cash. All other applicants must contribute a match of 25% to a new SJI-funded project, and at least 10% of that match must be in the form of cash.

The match requirement works as follows: If, for example, a State court system receives a $100,000 grant from the Institute, it must provide a $50,000 match; at least 20% of the required match for a new grant ($10,000 in the example) must be in the form of cash rather than in-kind support (*e.g.*, the value of staff time contributed to the project). If a non-profit organization receives a $100,000 grant from SJI, it must provide a $25,000 match, and at least 10% of that match ($2,500 in the example) must be in the form of cash.

Cash match includes funds directly contributed to the project by the applicant, or by other private or authorized public sources; income generated from tuition fees or the sale of project products during the grant period; and funds dedicated to the project by the grantee's assumption of approved indirect costs.

Non-cash match refers to in-kind contributions by the applicant, or other private or authorized public sources. This includes, for example, the monetary value of time contributed by existing personnel or members of an advisory committee (but not the time spent by participants in an educational program attending program sessions). The nature of the match (cash or in-kind) should be explained, and the tasks and line items for which costs will be covered wholly or in part by match should be specified.

The Institute may waive the match and cash match requirements in certain circumstances. *See* section VIII.A.8.c.

**8. Which of the Two Budget Forms Should Be Used?**

Section VI.A.1.c. of the SJI Grant Guideline encourages use of the spreadsheet format of Form C1 if the application requests $100,000 or more. Form C1 also works well for projects with discrete tasks, regardless of the dollar value of the project. Form C, the tabular format, is preferred for projects lacking a number of discrete tasks, or for projects requiring less than $100,000 of Institute funding. Generally, use the form that best lends itself to representing most accurately the budget estimates for the project.

**9. How Much Detail Should Be Included in the Budget Narrative?**

The budget narrative of an application should provide the basis for computing all project-related costs, as indicated in section VI.A.4. of the Guideline. To avoid common shortcomings of application budget narratives, applicants should include the following information:

*Personnel estimates* that accurately provide the amount of time to be spent by personnel involved with the project and the total associated costs, including current salaries for the designated personnel (*e.g.*, Project Director, 50% for one year, annual salary of $50,000 = $25,000). If salary costs are computed using an hourly or daily rate, the annual salary and number of hours or days in a work-year should be shown.

*Estimates for supplies and expenses* supported by a complete description of the supplies to be used, the nature and extent of printing to be done, anticipated telephone charges, and other common expenditures, with the basis for computing the estimates included (*e.g.*, 100 reports x 75 pages each x .05/page = $375.00). Supply and expense estimates offered simply as ''based on experience'' are not sufficient.

In order to expedite Institute review of the budget, make a final comparison of the amounts listed in the budget narrative with those listed on the budget form. In the rush to complete all parts of the application on time, there may be many last-minute changes; unfortunately, when there are discrepancies between the budget narrative and the budget form or the amount listed on the application cover sheet, it is not possible for the Institute to verify the amount of the request. A final check of the numbers on the form against those in the narrative will preclude such confusion.

**10. What Travel Regulations Apply to the Budget Estimates?**

Transportation costs and per diem rates must comply with the policies of the applicant organization, and a copy of the applicant's travel policy should be submitted as an appendix to the application. If the applicant does not have a travel policy established in writing, then travel rates must be consistent with those established by the Institute or the Federal Government (a copy of the Institute's travel policy is available upon request). The budget narrative should state which policies apply to the project.

The budget narrative also should include the estimated fare, the number of persons traveling, the number of trips to be taken, and the length of stay. The estimated costs of travel, lodging, ground transportation, and other subsistence should be listed and explained separately. It is preferable for the budget to be based on the actual costs of traveling to and from the project or meeting sites. If the points of origin or destination are not known at the time the budget is prepared, an average airfare may be used to estimate the travel costs. For example, if it is anticipated that a project advisory committee will include members from around the country, a reasonable airfare from a central point to the meeting site, or the average of airfares from each coast to the meeting site, may be used. Applicants should arrange travel so as to be able to take advantage of advanced-purchase price discounts whenever possible.

**11. May Grant Funds Be Used To Purchase Equipment?**

Generally, grant funds may be used to purchase only the equipment that is necessary to demonstrate a new technological application in a court, or that is otherwise essential to accomplishing the objectives of the project. The budget narrative must list the equipment to be purchased and explain why the equipment is necessary to the success of the project. The Institute's written prior approval is required when the amount of computer hardware to be purchased or leased exceeds $10,000, or the software to be purchased exceeds $3,000.

**12. To What Extent May Indirect Costs Be Included in the Budget Estimates?**

If an indirect cost rate has been approved by a Federal agency within the last two years, an indirect cost recovery estimate may be included in the budget. Recoverable indirect costs are limited to no more than 75% of a grantee's direct personnel costs (salaries plus fringe benefits). Grantees may apply unrecoverable indirect costs to meet their required matching contributions, including the required level of cash match. A copy of the approved indirect cost rate agreement should be submitted as an appendix to the application.

If an applicant does not have an approved rate agreement and cannot budget directly for all costs, an indirect cost rate proposal should be prepared in accordance with section IX.I.4. of the Guideline, based on the applicant's audited financial statements for the prior fiscal year. (Applicants lacking an audit should budget all project costs directly.)

**13. What Meeting Costs May Be Covered With Grant Funds?**

SJI grant funds may cover the reasonable cost of meeting rooms, necessary audio-visual equipment, meeting supplies, and working meals.

**14. Does the Budget Truly Reflect All Costs Required to Complete the Project?**

After preparing the program narrative portion of the application, applicants may find it helpful to list all the major tasks or activities required by the proposed project, including the preparation of products, and note the individual expenses, including personnel time, related to each. This will help to ensure that, for all tasks described in the application (*e.g.*, development of a videotape, research site visits, distribution of a final report), the related costs appear in the budget and are explained correctly in the budget narrative.

## Appendix B—Answers to Grantees' Frequently Asked Questions

The Institute's staff works with grantees to help assure the smooth operation of the project and compliance with the Guideline. On the basis of monitoring more than 1,000 grants, the Institute staff offers the following suggestions to aid grantees in meeting the administrative and substantive requirements of their grants.

**1. After the Grant Has Been Awarded, When Are the First Quarterly Reports Due?**

Quarterly Progress Reports and Financial Status Reports must be submitted within 30 days after the end of every calendar quarter—*i.e.*, no later than January 30, April 30, July 30, and October 30—regardless of the project's start date. The reporting periods covered by each quarterly report end 30 days before the respective deadline for the report. When an award period begins December 1, for example, the first quarterly progress report describing project activities between December 1 and December 31 will be due on January 30. A Financial Status Report should be submitted even if funds have not been obligated or expended.

By documenting what has happened over the past three months, quarterly progress reports provide an opportunity for project staff and Institute staff to resolve any questions before they become problems, and make any necessary changes in the project time schedule, budget allocations, etc. The quarterly progress report should describe project activities, their relationship to the approved timeline, and any problems encountered and how they were resolved, and outline the tasks scheduled for the coming quarter. It is helpful to attach copies of relevant memos, draft products, or other requested information. An original and one copy of a quarterly progress report and attachments should be submitted to the Institute.

Additional quarterly progress report or Financial Status Report forms may be obtained from the grantee's Program Manager at SJI, or photocopies may be made from the supply received with the award.

**2. Do Reporting Requirements Differ for Continuation Grants?**

Recipients of continuation grants are required to submit quarterly progress and Financial Status Reports on the same schedule and with the same information as recipients of grants for single new projects.

A continuation grant should be considered as a separate phase of the project. The reports should be numbered on a grant rather than project basis. Thus, the first quarterly report filed under a continuation grant should be designated as number one, the second as number two, and so on, through the final

progress and Financial Status Reports due within 90 days after the end of the grant period.

**3. What Information About Project Activities Should Be Communicated to SJI?**

In general, grantees should provide prior notice of critical project events such as advisory board meetings or training sessions so that the Institute Program Manager can attend, if possible. If methodological, schedule, staff, budget allocations, or other significant changes become necessary, the grantee should contact the Program Manager prior to implementing any of these changes, so that possible questions may be addressed in advance. Questions concerning the financial requirements, quarterly financial reporting, or payment requests should be addressed to the Institute's Grants Financial Manager listed in the award letter.

It is helpful to include the grant number assigned to the award on all correspondence to the Institute.

**4. Why Are Special Conditions Attached to the Award Document?**

Special conditions may be imposed to establish a schedule for reporting certain key information, assure that the Institute has an opportunity to offer suggestions at critical stages of the project, and provide reminders of pertinent Guideline requirements. Accordingly, it is important for grantees to check the special conditions carefully and discuss with their Program Managers any questions or problems they may have with the conditions. Most concerns about timing, response time, and the level of detail required can be resolved in advance through a telephone conversation. The Institute's primary concern is to work with grantees to assure that their projects accomplish their objectives, not to enforce rigid bureaucratic requirements. However, if a grantee fails to comply with a special condition or with other grant requirements, the Institute may, after proper notice, suspend payment of grant funds or terminate the grant.

Sections VIII., IX., and X. of the Grant Guideline contain the Institute's administrative and financial requirements. Institute Finance Division staff are always available to answer questions and provide assistance regarding these provisions.

**5. What Is a Grant Adjustment?**

A Grant Adjustment is the Institute's form for acknowledging the satisfaction of special conditions, or approving changes in grant activities, schedule, staffing, sites, or budget allocations requested by the project director. It also may be used to correct errors in grant documents or deobligate funds from the grant.

**6. What Schedule Should Be Followed in Submitting Requests for Reimbursements or Advance Payments?**

Requests for reimbursements or advance payments may be made at any time after the project start date and before the end of the 90-day close-out period. However, the Institute follows the U.S. Treasury's policy limiting advances to the minimum amount required to meet immediate cash needs. Given normal processing time, grantees should not seek to draw down funds for periods greater than 30 days from the date of the request.

**7. Do Procedures for Submitting Requests for Reimbursement or Advance Payment Differ for Continuation Grants?**

The basic procedures are the same for any grant. A continuation grant should be considered as a separate phase of the project. Payment requests should be numbered on a grant rather than a project basis. The first request for funds from a continuation grant should be designated as number one, the second as number two, and so on through the final payment request for that grant.

**8. If Things Change During the Grant Period, Can Funds be Reallocated From One Budget Category to Another?**

The Institute recognizes that some flexibility is required in implementing a project design and budget. Thus, grantees may shift funds among direct cost budget categories. When any one reallocation or the cumulative total of reallocations is expected to allocate funds to a previously unbudgeted cost category or to exceed five percent (5%) of the approved project budget, a grantee must specify the proposed changes, explain the reasons for the changes, and request prior Institute approval.

The same standard applies to continuation grants. In addition, prior written Institute approval is required to shift leftover funds from the original award to cover activities to be conducted under the continuation award, or to use continuation grant monies to cover costs incurred during the original grant period.

**9. What is the 90-Day Close-Out Period?**

Following the last day of the grant, a 90-day period is provided to allow for all grant-related bills to be received and posted, and grant funds drawn down to cover these expenses. No obligations of grant funds may be incurred during this period. The last day on which an expenditure of grant funds can be obligated is the end date of the grant period. Similarly, the 90-day period is not intended as an opportunity to finish and disseminate grant products. This should occur before the end of the grant period.

During the 90 days following the end of the award period, all monies that have been obligated should be expended. All payment requests must be received by the end of the 90-day ''close-out-period.'' Any unexpended monies held by the grantee that remain after the 90-day follow-up period must be returned to the Institute. Any funds remaining in the grant that have not been drawn down by the grantee will be deobligated.

**10. Are Funds Granted by SJI ''Federal'' Funds?**

The State Justice Institute Act provides that, except for purposes unrelated to this question, ''the Institute shall not be considered a department, agency, or instrumentality of the Federal Government.'' 42 U.S.C. 10704(c)(1). Because SJI receives appropriations from Congress, some grantee auditors have reported SJI grant funds as ''Other Federal Assistance.'' This classification is acceptable to SJI but is not required.

**11. If SJI Is Not a Federal Agency, Do OMB Circulars Apply With Respect to Audits?**

Unless they are inconsistent with the express provisions of the SJI Grant Guideline, Office of Management and Budget (OMB) Circulars A–110, A–21, A–87, A–88, A–102, A–122, A–128, and A–133 are incorporated into the Grant Guideline by reference. Because the Institute's enabling legislation specifically requires the Institute to ''conduct, or require each recipient to provide for, an annual fiscal audit'' (*See* 42 U.S.C. 10711(c)(1)), the Grant Guideline sets forth options for grantees to comply with this statutory requirement. (*See* Section IX.K.)

SJI will accept audits conducted in accordance with the Single Audit Act of 1984 and OMB Circulars A–128 or A–133 to satisfy the annual fiscal audit requirement. Grantees that are required to undertake these audits in conjunction with Federal grants may include SJI funds as part of the audit even if the receipt of SJI funds would not require such audits. This approach gives grantees an option to fold SJI funds into the governmental audit rather than to undertake a separate audit to satisfy SJI's Guideline requirements.

In sum, educational and nonprofit organizations that receive payments from the Institute that are sufficient to meet the applicability thresholds of OMB Circular A–133 must have their annual audit conducted in accordance with Government Auditing Standards issued by the Comptroller General of the United States rather than with generally accepted auditing standards. Grantees in this category that receive amounts below the minimum threshold referenced in Circular A–133 must also submit an annual audit to SJI, but they would have the option to conduct an audit of the entire grantee organization in accordance with generally accepted auditing standards; include SJI funds in an audit of Federal funds conducted in accordance with the Single Audit Act of 1984 and OMB Circulars A–128 or A–133; or conduct an audit of only the SJI funds in accordance with generally accepted auditing standards. (*See* Guideline section IX.K.) Circulars may be obtained from OMB by calling 202–395–3080 or visiting the OMB Web site at *http://www.whitehouse.gov/OMB*.

**12. Does SJI Have a CFDA Number?**

Auditors often request that a grantee provide the Institute's Catalog of Federal Domestic Assistance (CFDA) number for guidance in conducting an audit in accordance with Government Accounting Standards.

Because SJI is not a Federal agency, it has not been issued such a number, and there are no additional compliance tests to satisfy under the Institute's audit requirements beyond those of a standard governmental audit.

Moreover, because SJI is not a Federal agency, SJI funds should not be aggregated with Federal funds to determine if the applicability threshold of Circular A–133 has been reached. For example, if in fiscal year 2001 grantee ''X'' received $10,000 in Federal

funds from a Department of Justice (DOJ) grant program and $20,000 in grant funds from SJI, the minimum A–133 threshold would not be met. The same distinction would preclude an auditor from considering the additional SJI funds in determining what Federal requirements apply to the DOJ funds.

Grantees who are required to satisfy either the Single Audit Act or OMB Circulars A–128 or A–133, and who include SJI grant funds in those audits, need to remember that because of its status as a private non-profit corporation, SJI is not on routing lists of cognizant Federal agencies. Therefore, the grantee needs to submit a copy of the audit report prepared for such a cognizant Federal agency directly to SJI. The Institute's audit requirements may be found in section IX.K. of the Grant Guideline.

## Appendix C—SJI Libraries: Designated Sites and Contacts

**Alabama**

*Supreme Court Library*

Mr. Timothy A. Lewis, State Law Librarian, Alabama Supreme Court Bldg., 300 Dexter Avenue, Montgomery, AL 36104, (334) 242–4347

**Alaska**

*Anchorage Law Library*

Ms. Cynthia S. Fellows, State Law Librarian, Alaska Court Libraries. 820 W. Fourth Ave., Anchorage, AK 99501, (907) 264–0583

**Arizona**

*Supreme Court Library*

Ms. Lani Orosco, Arizona Supreme Court, Supreme Court Library, 1501 W. Washington, Suite 445, Phoenix, AZ 85007, (602) 542–5028, e-mail: *lorosco@supreme.sp.state.az.us*

**Arkansas**

*Administrative Office of the Courts*

Mr. James D. Gingerich, Director, Administrative Office of the Courts, Supreme Court of Arkansas, Justice Building, Little Rock, AR 72201, (501) 682–9400

**California**

*Administrative Office of the Courts*

Mr. William C. Vickrey, Administrative Director of the Courts, Administrative Office of the Courts, 455 Golden Gate Avenue, San Francisco, CA 94107, (415) 865–4200

**Colorado**

*Supreme Court Library*

Ms. Linda Gruenthal, Deputy Supreme Court Law Librarian, Colorado State Judicial Building, 2 East 14th Avenue, Denver, CO 80203, (303) 864–4522

**Connecticut**

*State Library*

Ms. Denise D. Jernigan, State Librarian, Connecticut State Library, 231 Capital Avenue, Hartford, CT 06106, (860) 566–2516

**Delaware**

*Administrative Office of the Courts*

Mr. Michael E. McLaughlin, Deputy Director, Administrative Office of the Courts, Carvel State Office Building, 820 North French Street, 11th Floor, P.O. Box 8911, Wilmington, DE 19801, (302) 577–8481

**District of Columbia**

*Executive Office, District of Columbia Courts*

Ms. Anne B. Wicks, Executive Officer, District of Columbia Courts, 500 Indiana Avenue, N.W., Suite 1500, Washington, D.C. 20001, (202) 879–1700

**Florida**

*Administrative Office of the Courts*

Ms. Elisabeth H. Goodner, State Courts Administrator, Florida Supreme Court Building, 500 South Duval Street, Tallahassee, FL 32399–1900, (850) 922–5081 e-mail: *osca@flcourts.org*

**Georgia**

*Administrative Office of the Courts*

Mr. David Ratley, Director, Administrative Office of the Courts, 47 Trinity Avenue, Suite 414, Atlanta, GA 30334, (404) 656–5171

**Hawaii**

*Supreme Court Library*

Ms. Ann Koto, State Law Librarian, The Supreme Court Law Library, 417 South King St., Room 119, Honolulu, HI 96813, (808) 539–4965

**Idaho**

*AOC Judicial Education Library/State Law Library*

Ms. Beth Peterson, State Law Librarian, Idaho State Law Library, Supreme Court Building, 451 West State St., Boise, ID 83720, (208) 334–3316

**Illinois**

*Supreme Court Library*

Ms. Brenda Larison, Supreme Court of Illinois Library, 200 East Capitol Avenue, Springfield, IL 62701–1791, (217) 782–2425

**Indiana**

*Supreme Court Library*

Mr. Dennis Lager, Supreme Court Librarian, Supreme Court Library, State House, Room 316, Indianapolis, IN 46204, (317) 232–2557

**Iowa**

*Administrative Office of the Court*

Dr. Jerry K. Beatty, Executive Director, Judicial Education & Planning, Office of the State Court Administrator, State Capital Building, Des Moines, IA 50319–0001, (515) 281–8279

**Kansas**

*Supreme Court Library*

Mr. Fred Knecht, Law Librarian, Kansas Supreme Court Library, 301 West 10th Street, Topeka, KS 66612, (913) 296–3257

**Kentucky**

*State Law Library*

Ms. Marge Jones, State Law Librarian, State Law Library, State Capital, Room 200-A, Frankfort, KY 40601, (502) 564–4848

**Louisiana**

*State Law Library*

Ms. Carol Billings, Director, Louisiana Law Library, 301 Loyola Avenue, New Orleans, LA 70112, (504) 568–5705

**Maine**

*State Law and Legislative Reference Library*

Ms. Lynn E. Randall, State Law Librarian, 43 State House Station, Augusta, ME 04333, (207) 287–1600

**Maryland**

*State Law Library*

Mr. Michael S. Miller, Director, Maryland State Law Library, Court of Appeal Building, 361 Rowe Boulevard, Annapolis, MD 21401, (410) 260–1430

**Massachusetts**

*Middlesex Law Library*

Ms. Sandra Lindheimer, Librarian, Middlesex Law Library, Superior Court House, 40 Thorndike Street, Cambridge, MA 02141, (617) 494–4148

**Michigan**

**Michigan Judicial Institute**

Dawn F. McCarty, Interim Director, Michigan Judicial Institute 222 Washington Square North, P.O. Box 30205, Lansing, MI 48909, (517) 334–7805

**Minnesota**

*State Law Library (Minnesota Judicial Center)*

Mr. Marvin R. Anderson, State Law Librarian, Supreme Court of Minnesota, 25 Constitution Avenue, St. Paul, MN 55155, (612) 297–2084

**Mississippi**

*Mississippi Judicial College*

Mr. Leslie Johnson, Director, University of Mississippi, P.O. Box 8850, University, MS 38677, (601) 232–5955

**Montana**

*State Law Library*

Ms. Judith Meadows, State Law Librarian, State Law Library of Montana, 215 North Sanders, Helena, MT 59620, (406) 444–3660

**Nebraska**

*Administrative Office of the Courts*

Mr. Joseph C. Steele, State Court Administrator, Administrative Office of the Courts/Probation, State Capitol Building, Room 1220, Post Office Box 98910, Lincoln, NE 68509–8910, (402) 471–3730

**Nevada**

*National Judicial College*

Mr. Randall Snyder, Law Librarian, National Judicial College, Judicial College Building,

University of Nevada, Reno, NV 89550, (775) 784–6747

**New Hampshire**

*New Hampshire Law Library*

Ms. Christine Swan, Law Librarian, New Hampshire Law Library, Supreme Court Building, One Noble Drive, Concord, NH 03301–6160, (603) 271–3777

**New Jersey**

*New Jersey State Library*

Ms. Marjorie Garwig, Supervising Law Librarian, New Jersey State Law Library, 185 West State Street, P.O. Box 520, Trenton, NJ 08625–0250, (609) 292–6230

**New Mexico**

*Supreme Court Library*

Mr. Thaddeus Bejnar, Librarian, Supreme Court Library, Post Office Drawer L, Santa Fe, NM 87504, (505) 827–4850

**New York**

*Supreme Court Library*

Ms. Barbara Briggs, Principal Law Librarian, New York State Supreme Court Law Library, Onondaga County Court House, 401 Montgomery Street, Syracuse, NY 13202, (315) 435–2063

**North Carolina**

*Supreme Court Library,*

Mr. Thomas P. Davis, Librarian, North Carolina Supreme Court Library, P.O. Box 28006, 2 East Morgan Street, Raleigh, NC 27601, (919) 733–3425

**North Dakota**

*Supreme Court Library*

Ms. Marcella Kramer, Assistant Law Librarian, Supreme Court Law Library 600 East Boulevard Avenue, Dept. 182, 2nd Floor, Judicial Wing, Bismarck, ND 58505–0540, (701) 328–2229

**Northern Mariana Islands**

*Supreme Court of the Northern Mariana Islands*

Honorable Miguel Sablan Demapan Chief Justice, Supreme Court of the Commonwealth of the Northern Mariana Islands, P.O. Box 2165 CK, Saipan, MP 96950, (670) 236–9700

**Ohio**

*Supreme Court Library*

Mr. Paul S. Fu, Law Librarian, Supreme Court Law Library, Supreme Court of Ohio 30 East Broad Street, Columbus, OH 43266–0419, (614) 466–2044

**Oklahoma**

*Administrative Office of the Courts*

Mr. Howard W. Conyers, Administrative Director of the Courts, 1915 North Stiles, Suite 305, Oklahoma City, OK 73105, (405) 521–2450

**Oregon**

*Administrative Office of the Courts*

Ms. Kingsley W. Click, State Court Administrator, Office of the State Court Administrator, Supreme Court Building, Salem, OR 97310, (503) 986–5900

**Pennsylvania**

*State Library of Pennsylvania,*

Ms. Barbara Miller, Collection Management Librarian, State Library of Pennsylvania, Office of Commonwealth Libraries, Bureau of State Library—Collection Management, 333 Market Street, Harrisburg, PA 17126–1745, (717) 787–5718, barbmiller@state.pa.us

**Puerto Rico**

*Office of Court Administration*

Alfredo Rivera-Mendoza, Esq., Director, Area of Planning and Management, Office of Court Administration, P.O. Box 917, Hato Rey, PR 00919

**Rhode Island**

*Roger Williams University*

Ms. Gail Winson, Director of the Library, Roger Williams University, School of Law Library, 10 Metacom Avenue, Bristol, RI 02809

**South Carolina**

*Coleman Karesh Law Library, (University of South Carolina School of Law)*

Mr. Steve Hinckley, Library Director, Coleman Karesh Law Library, U. S. C. Law Center, University of South Carolina, Columbia, SC 29208, (803) 777–5944

**South Dakota**

*State Law Library*

Librarian, 500 East Capitol, Pierre, South Dakota 57501, (605) 773–4898

**Tennessee**

*Tennessee State Law Library*

Honorable Cornelia A. Clark, Director, Administrative Office of the Courts, Tennessee Supreme Court, 511 Union, Nashville, TN 37243–0607, (615) 741–2687

**Texas**

*State Law Library*

Ms. Kay Schleuter, Director, State Law Library, P.O. Box 12367, Austin, TX 78711, (512) 463–1722

**U.S. Virgin Islands**

*Library of the Territorial Court of the Virgin Islands (St. Thomas)*

Librarian, The Library, Territorial Court of the Virgin Islands, Post Office Box 70, Charlotte Amalie, St. Thomas, U.S. Virgin Islands 00804

**Utah**

*Utah State Judicial Administration Library*

Ms. Debbie Christiansen, Utah State Judicial Administration Library, Administrative Office of the Courts, 450 South State, P.O. Box 140241, Salt Lake City, UT 84114–0241, (801) 533–6371

**Vermont**

*Supreme Court of Vermont*

Mr. Paul J. Donovan, Law Librarian, Department of Libraries, 109 State Street, Montpelier, VT 05609, (802) 828–3278

**Virginia**

*Administrative Office of the Courts*

Mr. Robert N. Baldwin, State Court Administrator, Supreme Court of Virginia, 100 North Ninth Street, 3rd Floor, Richmond, VA 23219, (804) 786–6455

**Washington**

*Washington State Law Library*

Ms. Deborah Norwood, State Law Librarian, Washington State Law Library, Temple of Justice, P.O. Box 40751, Olympia, WA 98504–0751, (360) 357–2136

**West Virginia**

*Administrative Office of the Courts*

Ms. Kathleen Gross, Deputy Director of Judicial Education, West Virginia Supreme Court of Appeals, State Capitol 1900 Kanawha Boulevard East, Building 1, Room E–100, Charleston, WV 25305, (304) 558–0145

**Wisconsin**

*State Law Library*

Ms. Jane Colwin, Director of Public Services, State Law Library, 310 E. State Capitol, P.O. Box 7881, Madison, WI 53707, (608) 261–2340

**Wyoming**

*Wyoming State Law Library*

Ms. Kathleen B. Carlson, Law Librarian, Wyoming State Law Library, Supreme Court Building, 2301 Capitol Avenue, Cheyenne, WY 82002, (307) 777–7509

**National**

**American Judicature Society**

Mr. John Edwards, Opperman Hall, Drake University Law School, 2507 University Avenue, Des Moines, IA 50311–4504, (515) 271–2141, e-mail: *John.Edwards@drake.edu*

**National Center for State Courts**

Ms. Peggy Rogers, Acquisitions/Serials Librarian, 300 Newport Avenue, Williamsburg, VA 23187–8798, (757) 259–1857

**JERITT**

Dr. Maureen E. Conner, Executive Director, The JERITT Project, 1407 S. Harrison, Suite 330 Nisbet, East Lansing, MI 48823–5239, (517) 353–8603, (517) 432–3965 (fax), e-mail: *connerm@msu.edu*, Web site: *http://jeritt.msu.edu*

**Appendix D—Illustrative List of Technical Assistance Grants**

The following list presents examples of the types of technical assistance for which State and local courts can request Institute funding. Please check with the JERITT project (*http://jeritt.msu.org* or 517/353–8603) for more information about these and

other SJI-supported technical assistance projects.

**Application of Technology**

Technology Plan (Office of the South Dakota State Court Administrator: SJI–99–066).

**Children and Families in Court**

Expanded Unified Family Court (Ventura County, CA, Superior Court: SJI–01–122).

Trial Court Performance Standards for the Unified Family Court of Delaware (Family Court of Delaware: SJI–98–205).

**Court Planning, Management, and Financing**

Job Classification and Pay Study of the New Hampshire Courts (New Hampshire Administrative Office of the Courts: SJI–98–011).

A Model for Building and Institutionalizing Judicial Branch Strategic Planning (12th Judicial Circuit, Sarasota, FL: SJI–98–266).

Strategic Planning (Fourth Judicial District Court, Hennepin County, MN: SJI–99–221).

Differentiated Case Management for the Improvement of Civil Case Processing in the Trial Courts of Texas (Texas Office of Court Administration: SJI–99–222).

**Dispute Resolution and the Courts**

Evaluating the New Mexico Court of Appeals Mediation Program (New Mexico Supreme Court: SJI–00–122).

**Improving Public Confidence in the Courts**

Mississippi Task Force on Gender Fairness in the Courts (Mississippi Administrative Office of the Courts: SJI–00–108).

Analysis of the Juror Debriefing Project (King County, WA, Superior Court: SJI–00–049).

**Improving the Court's Response to Family Violence**

New Hampshire Fatality Reviews (New Hampshire Administrative Office of the Courts: SJI–99–142).

**Education and Training for Judges and Other Court Personnel**

Iowa Supreme Court Advisory Committee on Judicial Branch Education (Iowa State Court Administrator's Office: SJI–01–200).

**Appendix E—Illustrative List of Model Curricula**

The following list includes examples of model SJI-supported curricula that State judicial educators may wish to adapt for presentation in education programs for judges and other court personnel with the assistance of a Judicial Branch Education Technical Assistance Grant. *Please refer to section VI.E. for information on submitting a letter application for a Judicial Branch Education Technical Assistance Grant.* A list of all SJI-supported education projects is available on the SJI Web site (*http://www.statejustice.org*). Please also check with the JERITT project (*http://jeritt.msu.edu or 517/353–8603*) and your State SJI-designated library (*See* Appendix C) for more information about these and other SJI-supported curricula that may be appropriate for in-State adaptation.

**Alternative Dispute Resolution**

*Judicial Settlement Manual* (National Judicial College: SJI–89–089).

*Improving the Quality of Dispute Resolution* (Ohio State University College of Law: SJI–93–277).

*Comprehensive ADR Curriculum for Judges* (American Bar Association: SJI–95–002).

*Domestic Violence and Custody Mediation* (American Bar Association: SJI–96–038).

**Court Coordination**

*Bankruptcy Issues for State Trial Court Judges* (American Bankruptcy Institute: SJI–91–027).

*Intermediate Sanctions Handbook: Experiences and Tools for Policymakers* (Center for Effective Public Policy: IAA–88–NIC–001).

*Regional Conference Cookbook: A Practical Guide to Planning and Presenting a Regional Conference on State-Federal Judicial Relationships* (U.S. Court of Appeals for the 9th Circuit: SJI–92–087).

*Bankruptcy Issues and Domestic Relations Cases* (American Bankruptcy Institute: SJI–96–175).

**Court Management**

*Managing Trials Effectively: A Program for State Trial Judges* (National Center for State Courts/National Judicial College: SJI–87–066/067, SJI–89–054/055, SJI–91–025/026).

*Caseflow Management Principles and Practices* (Institute for Court Management/National Center for State Courts: SJI–87–056).

*A Manual for Workshops on Processing Felony Dispositions in Limited Jurisdiction Courts* (National Center for State Courts: SJI–90–052).

*Managerial Budgeting in the Courts; Performance Appraisal in the Courts; Managing Change in the Courts; Court Automation Design; Case Management for Trial Judges; Trial Court Performance Standards* (Institute for Court Management/National Center for State Courts: SJI–91–043).

*Strengthening Rural Courts of Limited Jurisdiction and Team Training for Judges and Clerks* (Rural Justice Center: SJI–90–014, SJI–91–082).

*Integrating Trial Management and Caseflow Management* (Justice Management Institute: SJI–93–214).

*Leading Organizational Change* (California Administrative Office of the Courts: SJI–94–068).

*Managing Mass Tort Cases* (National Judicial College: SJI–94–141).

*Employment Responsibilities of State Court Judges* (National Judicial College: SJI–95–025).

*Caseflow Management; Resources, Budget, and Finance; Visioning and Strategic Planning; Leadership; Purposes and Responsibilities of Courts; Information Management Technology; Human Resources Management; Education, Training, and Development; Public Information and the Media* from ''NACM Core Competency Curriculum Guidelines'' (National Association for Court Management: SJI–96–148).

*Dealing with the Common Law Courts: A Model Curriculum for Judges and Court Staff* (Institute for Court Management/National Center for State Courts: SJI–96–159).

*Caseflow Management* from ''Innovative Educational Programs for Judges and Court Managers'' (Justice Management Institute: SJI–98–041).

**Courts and Communities**

*Reporting on the Courts and the Law* (American Judicature Society: SJI–88–014).

*Victim Rights and the Judiciary: A Training and Implementation Project* (National Organization for Victim Assistance: SJI–89–083).

*National Guardianship Monitoring Project: Trainer and Trainee's Manual* (American Association of Retired Persons: SJI–91–013).

*Access to Justice: The Impartial Jury and the Justice System and When Implementing the Court-Related Needs of Older People and Persons with Disabilities: An Instructional Guide* (National Judicial College: SJI–91–054).

*You Are the Court System: A Focus on Customer Service* (Alaska Court System: SJI–94–048).

*Serving the Public: A Curriculum for Court Employees* (American Judicature Society: SJI–96–040).

*Courts and Their Communities: Local Planning and the Renewal of Public Trust and Confidence: A California Statewide Conference* (California Administrative Office of the Courts: SJI–98–008).

*Charting the Course of Public Trust and Confidence in Our Courts* (Mid-Atlantic Association for Court Management: SJI–98–208).

*Trial Court Judicial Leadership Program: Judges and Court Administrators Serving the Courts and Community* (National Center for State Courts: SJI–98–268).

*Public Trust and Confidence* (Arizona Courts Association: SJI–99–063).

**Diversity, Values, and Attitudes**

*Troubled Families, Troubled Judges* (Brandeis University: SJI–89–071).

*The Crucial Nature of Attitudes and Values in Judicial Education* (National Council of Juvenile and Family Court Judges: SJI–90–058).

*Enhancing Diversity in the Court and Community* (Institute for Court Management/National Center for State Courts: SJI–91–043).

*Cultural Diversity Awareness in Nebraska Courts from Native American Alternatives to Incarceration Project* (Nebraska Urban Indian Health Coalition: SJI–93–028).

*Race Fairness and Cultural Awareness Faculty Development Workshop* (National Judicial College: SJI–93–063).

*A Videotape Training Program in Ethics and Professional Conduct for Nonjudicial Court Personnel and The Ethics Fieldbook: Tool For Trainers* (American Judicature Society: SJI–93–068).

*Court Interpreter Training Course for Spanish Interpreters* (International Institute of Buffalo: SJI–93–075).

*Doing Justice: Improving Equality Before the Law Through Literature-Based Seminars for Judges and Court Personnel* (Brandeis University: SJI–94–019).

*Multi-Cultural Training for Judges and Court Personnel* (St. Petersburg Junior College: SJI–95–006).

*Ethical Standards for Judicial Settlement: Developing a Judicial Education Module* (American Judicature Society: SJI–95–082).

*Code of Ethics for the Court Employees of California* (California Administrative Office of the Courts: SJI 95–245).

*Workplace Sexual Harassment Awareness and Prevention* (California Administrative Office of the Courts: SJI 96–089).

*Just Us On Justice: A Dialogue on Diversity Issues Facing Virginia Courts* (Virginia Supreme Court: SJI–96–150).

*When Bias Compounds: Insuring Equal Treatment for Women of Color in the Courts* (National Judicial Education Program: SJI 96–161).

*When Judges Speak Up: Ethics, the Public, and the Media* (American Judicature Society: SJI–96–152).

**Family Violence and Gender-Related Violent Crime**

*National Judicial Response to Domestic Violence: Civil and Criminal Curricula* (Family Violence Prevention Fund: SJI–87–061, SJI–89–070, SJI–91–055).

*Domestic Violence: A Curriculum for Rural Courts* (Rural Justice Center: SJI–88–081).

*Judicial Training Materials on Spousal Support; Judicial Training Materials on Child Custody and Visitation* (Women Judges' Fund for Justice: SJI–89–062).

*Understanding Sexual Violence: The Judicial Response to Stranger and Nonstranger Rape and Sexual Assault* (National Judicial Education Program: SJI–92–003, SJI–98–133 [video curriculum]).

*Domestic Violence & Children: Resolving Custody and Visitation Disputes* (Family Violence Prevention Fund: SJI–93–255).

*Adjudicating Allegations of Child Sexual Abuse When Custody Is In Dispute* (National Judicial Education Program: SJI 95–019).

*Handling Cases of Elder Abuse: Interdisciplinary Curricula for Judges and Court Staff* (American Bar Association: SJI–93–274).

**Health and Science**

*A Judge's Deskbook on the Basic Philosophies and Methods of Science: Model Curriculum* (University of Nevada, Reno: SJI–97–030).

**Judicial Education for Appellate Court Judges**

*Career Writing Program for Appellate Judges* (American Academy of Judicial Education: SJI–88–086).

*Civil and Criminal Procedural Innovations for Appellate Courts* (National Center for State Courts: SJI–94–002).

**Judicial Branch Education: Faculty and Program Development**

*The Leadership Institute in Judicial Education* and *The Advanced Leadership Institute in Judicial Education* (University of Memphis: SJI–91–021).

Faculty Development Instructional Program'' from *Curriculum Review* (National Judicial College: SJI–91–039).

*Resource Manual and Training for Judicial Education Mentors* (National Association of State Judicial Educators: SJI–95–233).

*Institute for Faculty Excellence in Judicial Education* (National Council of Juvenile and Family Court Judges: SJI–96–042; University of Memphis: SJI–01–202).

**Orientation, Mentoring, and Continuing Professional Education of Judges and Court Personnel**

*Legal Institute for Special and Limited Jurisdiction Judges* (National Judicial College: SJI–89–043, SJI–91–040).

*Pre-Bench Training for New Judges* (American Judicature Society: SJI–90–028).

*A Unified Orientation and Mentoring Program for New Judges of All Arizona Trial Courts* (Arizona Supreme Court: SJI–90–078).

*Court Organization and Structure* (Institute for Court Management/National Center for State Courts: SJI–91–043).

*New Employee Orientation Facilitators Guide* (Minnesota Supreme Court: SJI–92–155).

*Magistrates Correspondence Course* (Alaska Court System: SJI–92–156).

*Bench Trial Skills and Demeanor: An Interactive Manual* (National Judicial College: SJI 94–058).

*Ethical Issues in the Election of Judges* (National Judicial College: SJI–94–142).

*Caseflow Management; Resources, Budget, and Finance; Visioning and Strategic Planning; Leadership; Purposes and Responsibilities of Courts; Information Management Technology; Human Resources Management; Education, Training, and Development; Public Information and the Media* from ''NACM Core Competency Curriculum Guidelines'' (National Association for Court Management: SJI–96–148).

*Innovative Approaches to Improving Competencies of General Jurisdiction Judges* (National Judicial College: SJI–98–001).

*Caseflow Management* from ''Innovative Educational Programs for Judges and Court Managers'' (Justice Management Institute: SJI–98–041

**Juveniles and Families in Court**

*Fundamental Skills Training Curriculum for Juvenile Probation Officers* (National Council of Juvenile and Family Court Judges: SJI–90–017).

*Child Support Across State Lines: The Uniform Interstate Family Support Act from Uniform Interstate Family Support Act: Development and Delivery of a Judicial Training Curriculum* (ABA Center on Children and the Law: SJI 94–321).

*Juvenile Justice at the Crossroads: Literature-Based Seminars for Judges, Court Personnel, and Community Leaders* (Brandeis University: SJI–99–150).

**Strategic and Futures Planning**

*Minding the Courts into the Twentieth Century* (Michigan Judicial Institute: SJI–89–029).

*An Approach to Long-Range Strategic Planning in the Courts* (Center for Public Policy Studies: SJI–91–045).

**Substance Abuse**

*Good Times, Bad Times: Drugs, Youth, and the Judiciary* (Professional Development and Training Center, Inc.: SJI–91–095).

*Gaining Momentum: A Model Curriculum for Drug Courts* (Florida Office of the State Courts Administrator: SJI–94–291).

*Judicial Response to Substance Abuse: Children, Adolescents, and Families* (National Council of Juvenile and Family Court Judges: SJI–95–030).

*Judicial Education on Substance Abuse* (American Judges Association and National Center for State Courts: SJI–01–210).

BILLING CODE 6820–SC–P

## Appendix F

# STATE JUSTICE INSTITUTE
## APPLICATION

**1. APPLICANT**
a. Applicant Name _____
b. Organizational Unit _____
c. Street/P.O. Box _____
d. City _____
e. State _____ f. Zip Code _____
g. Phone Number _____
h. Fax Number _____
i. Web Site Address _____
j. Name & Phone Number of Contact Person _____
k. Title _____
l. E-Mail Address _____

**2. TYPE OF APPLICANT** *(Circle appropriate letter)*
a. State court
b. National organization operating in conjunction with State court
c. National State court support organization
d. College or university
e. Other non-profit organization or agency
f. Individual
g. Corporation or partnership
h. Other unit of government
i. Other _____ *(specify)*

**3. PROPOSED START DATE** _____

**4. PROJECT DURATION** (Months) _____

**5. EMPLOYER IDENTIFICATION #** _____

**6. IF THIS APPLICATION HAS BEEN SUBMITTED TO OTHER FUNDING SOURCES, PLEASE PROVIDE THE FOLLOWING INFORMATION:**
Source _____
Date Submitted _____
Amount Sought _____
Disposition (if any) or Current Status _____

**7. ENTITY TO RECEIVE FUNDS** *(if different from above)*
a. Organizational Name _____
b. Organizational Unit _____
c. Street/P.O. Box _____
d. City _____
e. State _____ f. Zip Code _____
g. Phone Number _____
h. Fax Number _____
i. Web Site Address _____
j. Name & Phone Number of Contact Person _____
k. Title _____
l. E-Mail Address _____

**8. a. AMOUNT REQUESTED FROM SJI $**_____
**b. AMOUNT OF MATCH**
Cash match $_____
Non-cash match $_____
**c. TOTAL MATCH $**_____
**d. TOTAL PROJECT COST $**_____

**9. TITLE OF PROPOSED PROJECT**

**10. CONGRESSIONAL DISTRICT OF:** _____
Name of Representative; District Number
_____
Project (if different than applicant): Name of Representative; District Number

**11. CERTIFICATION**
**On behalf of the applicant, I hereby certify that to the best of my knowledge the information in this application is true and complete. I have read the attached assurances (Form D) and understand that if this application is approved for funding, the award will be subject to those assurances. I certify that the applicant will comply with the assurances if the application is approved, and that I am lawfully authorized to make these representations on behalf of the applicant.**

SIGNATURE OF RESPONSIBLE OFFICIAL OF APPLICANT _____ TITLE _____ DATE _____
(For applications from State and local courts, Form B, Certificate of State Approval, must be attached.)

**FOR INSTITUTE USE ONLY**

| 12. a. APPLICATION NUMBER _____<br>b. CONCEPT PAPER NUMBER _____<br>c. GRANT NUMBER _____ | 13. DATE RECEIVED | 14. DATE OF ACTION |
|---|---|---|

Form A 09/00

# STATE JUSTICE INSTITUTE

## INSTRUCTIONS FOR SJI APPLICATION FORM A

1. a-1 Legal **name of applicant** (court, entity or individual); **name of the organizational unit**, if any, that will conduct the project; complete **address** of applicant, including phone and fax numbers and web site address; and name, phone number, title, and e-mail address of a **contact person** who can provide further information about this application.

2. a **State court** includes all appellate, general jurisdiction, limited jurisdiction, and special jurisdiction courts, as well as all offices that are supervised by or report for administrative purposes to the chief or presiding justice or judge, or his or her designee.

2. b **National organizations operating in conjunction with State court** include national non-profit organizations controlled by, operating in conjunction with, and serving the State courts.

2. c **National state court organizations** include national non-profit organizations with the primary mission of supporting, serving, or educating judges and other personnel of the judicial branch of State government.

2. d **College or university** includes all institutions of higher education.

2. e **Other non-profit organization or agency** includes those non-profit organizations and private agencies not included in sub-paragraphs (b)-(d).

2. f **Individual** means a person not applying in conjunction with or on behalf of an entity identified in one of the other categories.

2. g **Corporation or partnership** includes for-profit and not-for-profit entities not falling within one of the other categories.

2. h **Other unit of government** includes any governmental agency, office, or organization that is not a State or local court.

3. **The proposed start date** of the project should be the earliest feasible date on which the applicant will be able to begin project activities following the date of award.

4. **Project duration** refers to the number of months the applicant estimates will be needed to complete all project tasks after the proposed start date.

5. **Employer Identification #** as assigned by the Internal Revenue Service.

6. If this application or an application requesting support for the same project or an essentially similar project has been previously submitted to another funding source (Federal or private), enter the name of the **source**, the **date** of the submission, the **amount** of funding sought, and the **disposition** (if any).

7. a-1 **The entity to receive funds** is the court or organization that will receive, administer, and account for any monies awarded. If the applicant is a State or local court, the entity to receive funds would be the State's Supreme Court or its agency or council designated in accordance with 42 U.S.C. 10705(b) (4). **Applicants should complete this block only if the entity that will receive the funds is different from the applicant.**

8. a Insert the **amount requested** from the State Justice Institute to conduct the project.

8. b The **amount of match** is the amount, if any, to be contributed to the project by the applicant, a unit of State or local government, a Federal agency, or private sources. See 42 U.S.C. 10705 (d).

**Cash match** refers to funds directly contributed by the applicant, a unit of State or local government, a Federal agency, or private sources to support the project.

**Non-cash match** refers to in-kind contributions by the applicant, a unit of State or local government, or private sources to support the project.

8. c **Total match** refers to the sum of the cash and in-kind contributions to the project.

8. d **Total project cost** represents the sum of the amount requested from the Institute and all match contributions to the project.

9. The **title of the proposed project** should reflect the objectives of the activities to be conducted.

10. Enter the name of the applicant's Congressional Representative and the number of the applicant's **Congressional district,** along with the number of the Congressional district(s) in which most of the project activities will take place and the name(s) of the Representatives from those districts. If the project activities are not site-specific (for example, a series of training workshops that will bring together participants from around the State, the country, or from a particular region), enter *Statewide*, *national*, or *regional*, as appropriate, in the space provided.

11. **Signature** and title of a duly authorized representative of the applicant and the **date** the application was signed.

(Form B)

## STATE JUSTICE INSTITUTE

## Certificate of State Approval

The _____
Name of State Supreme Court or Designated Agency or Council

has reviewed the application entitled _____

prepared by _____
Name of Applicant

approves its submission to the State Justice Institute, and

☐ agrees to receive and administer and be accountable for all funds awarded by the Institute pursuant to the application.

☐ designates _____
Name of Trial or Appellate Court or Agency

as the entity to receive, administer, and be accountable for all funds awarded by the Institute pursuant to the application.

_____ _____
*Signature* *Date*

_____
*Name*

_____
*Title*

# INSTRUCTIONS - FORM B

The State Justice Institute Act requires that:

Each Application for funding by a state or local court shall be approved, consistent with State law, by the State's Supreme Court, or its designated agency or council, which shall receive, administer, and be accountable for all funds awarded by the Institute to such courts. 42 U.S.C. 10705(b) (4).

FORM B should be signed by the Chief Judge or Chief Justice of the State Supreme Court, or by the director of the designated agency or chair of the designated council. If the designated agency or council differs from the designee listed in Appendix I to the State Justice Institute Grant Guideline, evidence of the new or additional designation should be attached.

The term "State Supreme Court" refers to the court of last resort of a State. "Designated agency or council" refers to the office or judicial body which is authorized under State law or by delegation from the State Supreme Court to approve applications for funds and to receive, administer and be accountable for those funds.

# STATE JUSTICE INSTITUTE

## PROJECT BUDGET

(TABULAR FORMAT)

**Applicant:** _____

**Project Title** _____

**For Project Activity from** _____ **to** _____

**Total Amount Requested for Project from SJI $** _____

| ITEM | SJI FUNDS | STATE FUNDS | FEDERAL FUNDS | APPLICANT FUNDS | OTHER FUNDS | IN-KIND SUPPORT | TOTAL |
|---|---|---|---|---|---|---|---|
| Personnel | | | | | | | |
| Fringe Benefits | | | | | | | |
| Consultant / Contractual | | | | | | | |
| Travel | | | | | | | |
| Equipment | | | | | | | |
| Supplies | | | | | | | |
| Telephone | | | | | | | |
| Postage | | | | | | | |
| Printing / Photocopying | | | | | | | |
| Audit | | | | | | | |
| Other (specify) | | | | | | | |
| Direct Costs | | | | | | | |
| Indirect Costs | | | | | | | |
| Total | | | | | | | |

**Remarks:**

Form C 5/95 *(Instructions on reverse side)*

91853

# STATE JUSTICE INSTITUTE

PAGE _____ OF _____

## PROJECT BUDGET

(SPEADSHEET FORMAT)

**Applicant:** _____

**Project Title** _____

**For Project Activity from** _____ **to** _____

**Total Amount Requested for Project from SJI $** _____

**(See instruction regarding column headings)**

| ITEM | | | | | | | |
|---|---|---|---|---|---|---|---|
| Personnel | | | | | | | |
| Fringe Benefits | | | | | | | |
| Consultant / Contractual | | | | | | | |
| Travel | | | | | | | |
| Equipment | | | | | | | |
| Supplies | | | | | | | |
| Telephone | | | | | | | |
| Postage | | | | | | | |
| Printing / Photocopying | | | | | | | |
| Audit | | | | | | | |
| Other (specify) | | | | | | | |
| Direct Costs | | | | | | | |
| Indirect Costs (%) | | | | | | | |
| SJI Total | | | | | | | |
| STATE FUNDS | | | | | | | |
| FEDERAL FUNDS | | | | | | | |
| APPLICANT FUNDS | | | | | | | |
| OTHER FUNDS | | | | | | | |
| IN-KIND FUNDS | | | | | | | |
| Total | | | | | | | |

**Form C1** 5/95 *(Instructions on reverse side)*

91854

## Application Budget Instructions

Applicants may submit the proposed project budget in either the tabular format of Form C or a spreadsheet format similar to Form C1. Applicants requesting more than $100,000 are encouraged to use the spreadsheet format. If the proposed project period is for more than 12 months, separate totals should be submitted for each succeeding 12-month period or portion thereof beyond month 12.

In addition to Form C or C1, applicants must provide a detailed budget narrative that explains the basis for the estimates in each budget category (see Guideline section VI.A.4.). If the applicant is requesting indirect costs and has an indirect cost rate that has been approved by a Federal agency, the basis for that rate, together with a copy of the letter or other official document stating that it has been approved, should be attached. Recoverable indirect costs are limited to no more than 75% of personnel and fringe benefit costs.

If matching funds from other sources are being sought, the source, current status of the request, and anticipated decision date must be provided.

COLUMN HEADINGS: For Budget Form C1, the columns should be labeled consecutively by task, e.g., TASK #1, TASK #2, etc. At the end of each 12-month period or portion thereof beyond month 12, the following 4 columns must be included: SJI FUNDS; MATCH; OTHER; TOTAL. Entries in these columns should include the line-item totals by source of funding per the column headings.

# STATE JUSTICE INSTITUTE
## ASSURANCES

The applicant hereby assures and certifies that it possesses legal authority to apply for the award, and that if funds are awarded by the State Justice Institute pursuant to this application, it will comply with all applicable provisions of law and the regulations, policies, guidelines and requirements of the Institute as they relate to the acceptance and use of Institute funds pursuant to this application. The applicant further assures and certifies with respect to this application, that:

1. No person will, on the basis of race, sex, national origin, disability, color, or creed be excluded from participation in, denied the benefits of, or otherwise subjected to discrimination under any program or activity supported by Institute funds, and that the applicant will immediately take any measures necessary to effectuate this assurance.

2. In accordance with 42 U.S.C. 10706(a), funds awarded to the applicant by the Institute will not be used, directly or indirectly, to influence the issuance, amendment, or revocation of any Executive order or similar promulgation by Federal, State or local agencies, or to influence the passage or defeat of any legislation or constitutional amendment by any Federal, State or local legislative body.

3. In accordance with 42 U.S.C. 10706(a) and 10707(c):

   a. It will not contribute or make available Institute funds, project personnel, or equipment to any political party or association, to the campaign of any candidate for public or party office, or to influence the passage or defeat of any ballot measure, initiative, or referendum;

   b. No officer or employee of the applicant will intentionally identify the Institute or the applicant with any partisan or nonpartisan political activity or the campaign of any candidate for public or party office; and,

   c. No officer or employee of the applicant will engage in partisan political activity while engaged in work supported in whole or in part by the Institute.

4. In accordance with 42 U.S.C. 10706(b), no funds awarded by the Institute will be used to support or conduct training programs for the purpose of advocating particular nonjudicial public policies or encouraging nonjudicial political activities.

5. In accordance with 42 U.S.C. 10706(d), no funds awarded by the Institute will be used to supplant State or local funds supporting a program or activity; to construct court facilities or structures, except to remodel existing facilities or to demonstrate new architectural or technological techniques, or to provide temporary facilities for new personnel or for personnel involved in a demonstration or experimental program; or to solely purchase equipment for a court system.

6. It will provide for an annual fiscal audit of the project.

7. It will give the Institute, through any authorized representative, access to and the right to examine all records, books, papers, or documents related to the award.

8. In accordance with 42 U.S.C. 10708 (b) (as amended), research or statistical information that is furnished during the course of the project and that is identifiable to any specific individual, shall not be used or revealed for any purpose other than the purpose for which it was obtained. Such information and copies thereof shall be immune from legal process, and shall not be offered as evidence or used for any purpose in any action suit, or other judicial, legislative, or administrative proceeding without the consent of the person who furnished the information.

9. All research involving human subjects will be conducted with the informed consent of those subjects and in a manner that will ensure their privacy and freedom from risk or harm and the protection of persons who are not subjects of the research but would be affected by it, unless such procedures and safeguards would make the research impractical. In such instances, the Institute must approve procedures designed by the grantee to provide human subjects with relevant information about the research after their involvement and to minimize or eliminate risk or harm to those subjects due to their participation.

10. All products prepared as the result of the project will be originally-developed material unless otherwise specifically provided for in the award documents, and that material not originally developed that is included in such projects must by properly identified, whether the material is in a verbatim or extensive paraphrase format.

11. No funds will be obligated for publication or reproduction of a final product developed with Institute funds without the written approval of the Institute. The recipient will submit a final draft of each such product to the Institute for review and approval prior to submitting that product for publication or reproduction.

12. The following statement will be prominently displayed on all products prepared as a result of the project:
    This [document, film, videotape, etc.] was developed under a [grant, cooperative agreement, contract] from the State Justice Institute. Points of view expressed herein are those of the [author(s), filmmaker(s), etc.] and do not necessarily represent the official position or policies of the State Justice Institute.

13. THE "SJI" logo will appear on the front cover of a written product or in the opening frames of a video production produced with SJI funds, unless another placement is approved in writing by the Institute.

14. Except as otherwise provided in the terms and conditions of an Institute award, the recipient is free to copyright any books, publications, or other copyrightable materials developed in the course of an Institute-supported project, but the Institute shall reserve a royalty-free, non-exclusive and irrevocable right to reproduce, publish, or otherwise use, and to authorize others to use, the materials for purposes consistent with the State Justice Institute Act.

15. It will submit quarterly progress and financial reports within 30 days of the close of each calendar quarter during the funding period (that is, no later than January 30, April 30, July 30, and October 30); that progress reports will include a narrative description of project activities during the calendar quarter, the relationship between those activities and the task schedule and objectives set forth in the approved application or an approved adjustment thereto, any significant problem areas that have developed and how they will be resolved, and the activities scheduled during the next reporting period; and that financial reports will contain the information requested on the financial report form included in the award documents.

16. At the conclusion of the project, title to all expendable and nonexpendable personal property purchased with Institute funds shall vest in the court, organization or individual that purchased the property if certification is made to the Institute that the property will continue to be used for the authorized purposes of the Institute-funded project or other purposes consistent with the State Justice Institute Act, as approved by the Institute. If such certification is not made or the Institute disapproves such certification, title to all such property with an aggregate or individual value of $1,000 or more shall vest in the Institute, which will direct the disposition of the property.

17. The person signing the application is authorized to do so on behalf of the applicant and to obligate the applicant to comply with the assurances enumerated above.

# DISCLOSURE OF LOBBYING ACTIVITIES

*The State Justice Institute Act prohibits grantees from using funds awarded by the Institute to directly or indirectly influence the passage or defeat of any legislation by Federal, State of local legislative bodies. 42 U.S.C. 10706 (a). It also is the policy of the Institute to award funds only to support applications submitted by organizations that would carry out the objectives of their applications in an unbiased manner.*

*Consistent with this policy and the provisions of 42 U.S.C. 10706 (a), the Institute will not knowingly award a grant to an applicant that has, directly or through an entity that is part of the same organization as the applicant, advocated a position before Congress on the specific subject matter of the application. As a means of implementing that prohibition, SJI requires organizations submitting applications to the Institute to disclose whether they, or another entity that is part of the same organization as the applicant, have advocated a position before Congress on any issue, and to identify the specific subjects of their lobbying efforts. This form must be submitted with your application.*

**Name of Applicant:** _____

**Title of Application:** _____

_____

☐ **Yes** ☐ **No** **Has the applicant (or an entity that is part of the same organization as the applicant) directly or indirectly advocated a position before Congress on any issue within the past five years?**

## SPECIFIC SUBJECTS OF LOBBYING EFFORTS

If you answered **YES** above, please list the specific subjects on which your organization (or another entity that is part of your organization) has directly or indirectly advocated a position before Congress within the past five years. If necessary, you may continue on the back of this form or on an attached sheet.

| Subject | Year |
|---|---|
| | |
| | |
| | |
| | |
| | |
| | |

## STATEMENT OF VERIFICATION

I declare under penalty of perjury that the information contained in this disclosure statement is correct and that I am authorized to make this verification on behalf of the applicant.

_____

**Signature** **Name (Typed)**

_____

**Title** **Date**

# Appendix G

(Form E)

**STATE JUSTICE INSTITUTE**

**LINE-ITEM BUDGET FORM**

For Judicial Branch Education Technical Assistance and Technical Assistance Grant Requests*

| Category | SJI Funds | Cash Match | In-Kind Match |
|---|---|---|---|
| Personnel | $_____ | $_____ | $_____ |
| Fringe Benefits | $_____ | $_____ | $_____ |
| Consultant/Contractual | $_____ | $_____ | $_____ |
| Travel | $_____ | $_____ | $_____ |
| Equipment | $_____ | $_____ | $_____ |
| Supplies | $_____ | $_____ | $_____ |
| Telephone | $_____ | $_____ | $_____ |
| Postage | $_____ | $_____ | $_____ |
| Printing/Photocopying | $_____ | $_____ | $_____ |
| Audit | $_____ | $_____ | $_____ |
| Other | $_____ | $_____ | $_____ |
| Indirect Costs (%) | $_____ | $_____ | $_____ |
| TOTAL | $_____ | $_____ | $_____ |

**PROJECT TOTAL** $_____

Financial assistance has been or will be sought for this project from the following other sources:

_____

_____

* Judicial Branch Education Technical Assistance Grant requests and Technical Assistance Grant requests should also include a budget narrative explaining the basis for each line-item listed above.

## Appendix H

# SJI Scholarship Application

*This application does not serve as a registration for the course. Please contact the education provider.*

### APPLICANT INFORMATION:

1. Applicant Name: _____
(Last) (First) (MI)

2. Position: _____

3. Name of Court: _____

4. Address: _____
Street/P.O. Box

_____
City State Zip Code

5. Telephone No. _____

6. Congressional District: _____

### PROGRAM INFORMATION:

7. Course Name: _____

8. Course Dates: _____

9. Course Provider: _____

10. Location Offered: _____

### ESTIMATED EXPENSES:

*(Please note: Scholarships are limited to tuition, reasonable lodging up to $150 per night (including taxes), and transportation expenses to and from the site of the course up to a maximum of $1,500.)*

Tuition: $ _____ Transportation: $ _____
*(Airfare, train fare, or if you plan to drive, an amount equal to the approximate distance and mileage rate.)*

Lodging: $ _____ Total Amount Requested: $ _____

Are you seeking/have you received a scholarship for this course from another source?

❑ Yes ❑ No If so, please specify the source(s) and amounts(s) _____

_____

Form S1 (11/03)

## SJI SCHOLARSHIP APPLICATION PAGE 2

### ADDITIONAL INFORMATION:

*Please attach a current resume or professional summary, and provide the information requested below. (You may attach additional pages if necessary.)*

1. Please describe your need to acquire the skills and knowledge taught in this course.

2. Please describe how will taking this course benefit you, your court, and the State's courts generally.

3. Is there an educational program currently available through your State on this topic?

4. Are State or local funds available to support your attendance at the proposed course? If so, what amount(s) will be provided?

5. How long have you served as a judge or court manager? _____

6. How long do you anticipate serving as a judge or court manager, assuming reelection or reappointment?

   ☐ 0–1 year ☐ 2–4 years ☐ 5–7 years ☐ 8–10 years ☐ 11+ years

7. What continuing professional education programs have you attended in the past year? Please indicate which were mandatory (M) and which were non-mandatory (V).

### STATEMENT OF APPLICANT'S COMMITMENT

**If a scholarship is awarded, I will share the skills and knowledge I have gained with my court colleagues locally, and if possible, Statewide, and I will submit an evaluation of the educational program to the State Justice Institute and to the Chief Justice of my State.**

_____ Signature

_____ Date

*Please return this form and Form S-2 to:*

Scholarship Coordinator, State Justice Institute, 1650 King Street, Suite 600, Alexandria Virginia 22314

# SJI Scholarship Application

## Concurrence

I, _____ ,
**Name of Chief Justice (or Chief Justice's Designee)**

have reviewed the application for a scholarship to attend the program entitled

_____

prepared by _____
**Name of Applicant**

and concur in its submission to the State Justice Institute. The applicant's participation in the program would benefit the State; the applicant's absence to attend the program would not present an undue hardship to the court; public funds are not available to enable the applicant to attend this course; and receipt of a scholarship would not diminish the amount of funds made available by the State for judicial branch education.

_____
**Signature**

_____
**Name**

_____
**Title**

_____
**Date**

**Form S2 (9/98)**

[FR Doc. 03–29579 Filed 11–28–03; 8:45 am]
BILLING CODE 6820–SC–C

Federal Register

Monday,
December 1, 2003

# Part III

# Department of Housing and Urban Development

## 24 CFR Part 891

## Mixed-Finance Development for Supportive Housing for the Elderly or Persons With Disabilities and Other Changes to 24 CFR Part 891; Interim Rule

**DEPARTMENT OF HOUSING AND URBAN DEVELOPMENT**

**24 CFR Part 891**

**[Docket No. FR–4725–I–01]**

**RIN 2502–AH83**

## Mixed-Finance Development for Supportive Housing for the Elderly or Persons With Disabilities and Other Changes to 24 CFR Part 891

**AGENCY:** Office of the Assistant Secretary for Housing-Federal Housing Commissioner, HUD.

**ACTION:** Interim rule.

**SUMMARY:** This interim rule implements statutory changes that enable the use of mixed-finance and for-profit participation in the Section 202 supportive housing programs for the elderly and the Section 811 supportive housing program for persons with disabilities, as well as makes other changes to those programs. The rule uses the mixed-finance development model to leverage the capital and expertise of the private developer community to create attractive and affordable supportive housing developments for the elderly or persons with disabilities. In addition, the rule is structured so that tax credits can be used to provide additional units as well as supplement capital advance funds for the Section 202 or 811 project. The rule sets standards for the participation of limited partner investors (who may be for-profit entities) in partnership with a sole-purpose nonprofit general partner; development proposals and supporting documents; eligible fees and expenses; the use of capital advances in the mixed-finance context; and other matters relevant to mixed-finance development of these types of projects.

The public should note that the effective date of the information collection requirements in this rule is delayed, as stated in the ''Effective Date'' section below, pending approval of the information collections required by this rule under the Paperwork Reduction Act. HUD will publish a notice when paperwork approval for this rule is obtained.

**DATES:** *Comment Due Date:* January 30, 2004.

*Effective Date:* December 31, 2003. The portions of this rule requiring information collection are not effective until OMB approval of the information collection requirements of this rule. The sections requiring information collection are: §§ 891.820(a), 891.820(b), 891.820(c), 891.820(d), 891.820(e), 891.820(g), 891.820(h) 891.820(i), 891.820(j), 891.820(k), 891.820(l), 891.820(m), 891.820(n), and 891.825. HUD will publish a document in the **Federal Register** announcing the effective date of these sections.

**ADDRESSES:** Interested persons are invited to submit comments regarding this rule to the Regulations Division, Office of General Counsel, Room 10276, Department of Housing and Urban Development, 451 Seventh Street SW., Washington, DC 20410–0500. Communications should refer to the above docket number and title. A copy of each communication submitted will be available for public inspection and copying between 7:30 a.m. and 5:30 p.m. weekdays at the above address. Facsimile (FAX) comments are not acceptable.

**FOR FURTHER INFORMATION CONTACT:** Willie Spearmon, Director, Office of Housing Assistance and Grant Administration, Department of Housing and Urban Development, 451 Seventh Street SW., Washington, DC 20410–8000; telephone (202) 708–3000 (this is not a toll-free number). Hearing- or speech-impaired individuals may access this number via TTY by calling the toll-free Federal Information Relay Service at (800) 877–8339.

**SUPPLEMENTARY INFORMATION:**

### I. Legislative Background

The American Homeownership and Economic Opportunity Act of 2000, Pub. L. 106–569 (AHEO Act), amended both the Section 202 supportive housing program for the elderly and the Section 811 supportive housing program for persons with disabilities. These amendments allow the participation of for-profit limited partnerships and the use of mixed-finance development methods. Section 831 of the AHEO Act, 114 Stat. 3021, further amended section 202(k)(4) of the Housing Act of 1959, 12 U.S.C 1701q(k)(4), to add to the existing statutory definition of ''private nonprofit organization'' a for-profit limited partnership the sole general partner of which is a nonprofit organization meeting the requirements under 12 U.S.C. 1701q(k)(4)(A)–(C), or a nonprofit corporation wholly owned and controlled by a nonprofit organization meeting those requirements. Section 841 of the AHEO Act, 114 Stat. 3022, amended section 811(k)(6) of the National Affordable Housing Act, 42 U.S.C. 8013(k)(6), to add to the definition of ''nonprofit organization'' a for-profit limited partnership, the sole general partner of which is a nonprofit organization meeting the requirements of 42 U.S.C. 8013(k)(6)(A)–(D), or a nonprofit corporation wholly owned and controlled by a nonprofit organization meeting those requirements. In both cases, the statutory requirements for the nonprofit organization include a nonprofit organizational structure, a governing board that includes the representation of the views of the community and is responsible for operating the development, and approval as to financial responsibility by HUD. (*See* 12 U.S.C. 1701q(k)(4) and 42 U.S.C. 8013(k)(6), as amended.) For purposes of subpart F of this rule, both types of organizations are referred to as Nonprofit Organizations.

Sections 832 and 842 of the AHEO Act, 114 Stat. 3021 and 3022, broadened the funding sources that may be used for amenities and design and construction suitable for supportive housing for the elderly or persons with disabilities. Excess amenities may not be funded with the capital advance under either program, and, if other funds are used, the cost of such amenities is not taken into account in determining the amount of Federal assistance or the rent contribution of tenants. Under the statute as amended, an owner may now treat funds from other Federal and non-federal sources as amounts not derived from a Federal grant. Sections 834 and 844 of the AHEO Act, 114 Stat. 3021–22 and 3023, respectively, amended 12 U.S.C. 1701q(j) and 42 U.S.C. 8013(j) to add a new paragraph to each statute relating to the use of project reserve accounts under the existing supportive housing for the elderly and persons with disabilities programs. Under these new sections, project reserves may be used to reduce the number of units by combining and retrofitting units that are obsolete or unmarketable. HUD approval is required to ensure that reduction of units is for appropriate purposes.

Sections 835 and 845 of the AHEO Act amended section 202(h)(1) of the Housing Act of 1959, 12 U.S.C. 1701q(h)(1), and section 811(h)(1) of the National Affordable Housing Act, 42 U.S.C. 8031(h)(1), respectively, to clarify that commercial facilities for the benefit of residents of the project and the community in which the project is located, may be located and operated in a supportive housing project for the elderly or persons with disabilities. Such commercial facilities cannot be subsidized with 202 or 811 funds.

Section 833 of the AHEO Act amended sections 202(b) and 202(h)(2) of the Housing Act of 1959, 12 U.S.C. 1701q(b) and 1701q(h)(2), to remove the limitation in the Section 202 program that existing housing be acquired only from the Resolution Trust Corporation

(RTC). Section 202 owners may now acquire property without the need for rehabilitation for use in supportive housing from other sources. In the case of section 811, the statute does not limit acquisition to RTC properties (*see* 42 U.S.C. 8013(b)(2)).

**II. This Interim Rule**

This rulemaking amends 24 CFR part 891, which regulates HUD-assisted supportive housing for the elderly and persons with disabilities. Most importantly, this rule establishes a mixed-finance program under which partnerships with for-profit limited partners could participate as mixed-finance owners in the development and management of supportive housing under part 891, if they partner with a nonprofit general partner meeting the requirements of the statute and this rule. Such general partner must have been created by a sponsor that has received a Section 202 or Section 811 fund reservation. In addition, this rule makes changes to other portions of part 891 to conform to recent changes in law, and to include additional provisions applicable to the existing Section 202 and 811 programs.

This rule revises 24 CFR 891.120 and 891.405, two cross-cutting sections that govern both supportive housing for elderly persons and persons with disabilities. As to 891.120, the rule adds a new paragraph (e) to permit commercial facilities for the benefit of residents in supportive housing developments under part 891, as long as the commercial facilities are not funded with the supportive housing program funds. Such commercial facilities are considered public accommodations under Title III of the Americans with Disabilities Act and must be accessible under the requirements of that Act. Section 891.405 of this interim rule adds a new paragraph (d) permitting project reserves to be used to reduce the number of units for the purpose of retrofitting obsolete or unmarketable units; for example, two efficiencies (0 bedroom) could be combined to form a one-bedroom unit. Retrofitting must be consistent with the applicable accessibility requirements of Section 504 of the Rehabilitation Act of 1973. HUD approval would be required for any such change. The definition of ''replacement reserve account'' in 891.105 is revised to be consistent with the new paragraph.

This rule adds material regarding the developer's fee in the context of this program in § 891.815. This section establishes the appropriate amount of the developer's fee and the eligible and ineligible uses of the fee. Previously, this material was found in handbook publications (*see* Notice H 96–102, as extended by Notice H 03–08). Eligible uses of the developer's fee are both to fund eligible costs and to contribute to the general partner's share of the partnership assets. The total fee is capped at the amount stated in § 891.815(a), and the amount that may be taken out of the capital advance to pay the developer's fee is capped in § 891.815(b).

The rule also revises the definition of ''acquisition'' in 24 CFR 891.205 and 891.305. Since the RTC is no longer in existence, the rule removes the regulatory requirement that acquisition of properties for the supportive housing program under part 891 be purchased from the RTC. The rule also makes § 891.205 parallel to § 891.305 by restricting capital advances for developments owned and operated by the sponsor, except in connection with rehabilitation. Capital advance funds may not be provided to refinance a federally assisted or insured project.

The rule creates a new subpart F to 24 CFR part 891, to state the rules governing the mixed-finance program for supportive housing for the elderly and persons with disabilities. The new subpart states the basic rules for participation in the program. Except where specifically stated otherwise, this subpart includes by cross-reference the basic regulations of the Section 202 and 811 supportive housing programs and adds additional requirements related to mixed-finance developments.

Sections 891.800, 891.802, and 891.805 state the purpose, applicability of other provisions, and definitions, respectively. The overall purpose of the legislation and rule is to create more supportive housing for elderly persons and persons with disabilities. The means of doing so is to bring in for-profit entities, in partnership with nonprofit general partners, thus leveraging private capital for developing additional units. In turn, limited partnerships can apply for and utilize Federal low-income housing tax credits, assuming that their developments meet all the requirements of IRS rules for tax credits. The Department has determined that all mixed-finance developments must meet the civil rights nondiscrimination statutes and all of the implementing regulations and Section 504 requirements and that these requirements apply to all of the development's units regardless of funding source. The Civil Rights Restoration Act of 1991 amended the nondiscrimination requirements of Title VI of the Civil Rights Act of 1964 and Section 504 of the Rehabilitation Act of 1973 to state that their nondiscrimination provisions applied to ''all of the operations of an entire corporation, partnership, or other private organization or entire sole proprietorship if assistance is extended to such corporation, partnership, private organization, or sole proprietorship as a whole; or which is principally engaged in the business of providing housing.''

This interim rule, in section 891.805, creates additional definitions pertinent to the mixed-finance supportive housing program only. These include a definition of a ''mixed-finance owner,'' which must include a single-purpose Nonprofit Organization (in the case of supportive housing for the elderly, a private Nonprofit Organization, and, in the case of housing for the disabled, a Nonprofit Organization with a section 501(c)(3) IRS tax exemption), which must be the sole general partner. For-profit limited partners may be included where the Nonprofit Organization is the sole general partner. The ''Single-Purpose Nonprofit Organization'' (for 811 projects) or ''Single-Purpose Private Nonprofit Organization'' (for 202 projects) also must meet the requirements of the definition, which includes the statutory requirements that the organization have the appropriate tax-exempt status; that its net earnings do not go to profit any particular individual; that the governing board includes representation of the views of the community and is responsible for the operation of the part 891 supportive housing; and that it is approved as to financial responsibility by HUD. In addition, the Nonprofit Organization meeting these requirements can be the general partner of a partnership with for-profit limited partners, as long as it owns at least one-hundredth of one percent of the partnership assets, or is a nonprofit corporation wholly owned by an organization meeting those requirements. The Nonprofit Organization must be formed by a sponsor receiving a Section 202 or 811 fund reservation.

Sections 891.808 and 891.810 address capital advance funds and project rental assistance in the mixed-finance context. Capital advance funds are provided as in accordance with the regular Section 202 and 811 programs, except that the mechanism for providing the funding is somewhat more complex in a mixed-finance arrangement. HUD will initially provide the fund reservation to the project sponsor (the term is defined in sections 891.205 and 891.305), which will then transfer the fund reservation to the single-purpose Nonprofit Organization. HUD then will provide the capital advance funds to the

Nonprofit Organization, which will deposit the funds in a disbursement escrow account to be loaned to the mixed-finance owner only upon HUD approval of the drawdown. The loan will be non-amortizing and at the interest rate for the 202 or 811 program in effect at the time of the closing of the capital advance, and is not repayable if the project remains available for very low income elderly or disabled persons for 40 years. Finally, paragraphs (b) and (c) of § 891.808 ensure that the proper number of units are built with the capital advance funds, and that the capital advance funds are not used improperly in the mixed-finance context (for example, to support the development of non-202 or -811 units).

Project rental assistance is covered in section 891.810 and is essentially the same as for the 202 and 811 programs generally, and is defined in section 891.105. Project rental assistance can only be paid for 202 and 811 units. Any necessary funds for the non-202 or -811 units must be obtained from another source.

Section 891.813 deals with the eligible uses of assistance under this proposed subpart. Paragraph (a) reiterates the statutory standards. Paragraph (b) deals with excess amenities. Such amenities may not be funded with capital advance funds. The main concern here is that amenities be provided in a manner that makes them available to all residents, assisted and unassisted alike. To that end, the amenities cannot be made mandatory for the assisted residents, although they are permitted to participate in or use the amenities voluntarily. Any fee charged for the amenities must be reasonable, so that assisted residents who want to do so can use the amenities.

Section 891.815 includes material on developer's fees. This section sets limitations on the total developer's fee and the amount of the capital advance that may be paid toward the developer's fee. In addition, the section provides that the developer's fee may be used for the general partner's contribution to the partnership assets, as well as listing other eligible and ineligible uses for the developer's fee.

Section 891.818 states the contents of the firm commitment application for 202 or 811 units in mixed-finance projects. The application requirements in this interim rule closely follow the guidelines on firm commitment applications (*see* Notice H 96–102, as extended by Notice H 03–08). In the mixed-finance context, the partnership structure involves additional parties in the application process, such as the general partner and the for-profit limited partners.

Additionally, in the mixed-finance program, there will be a mixed-finance proposal addressing the total mixed-finance project, including non-202 or -811 units and any commercial space, submitted at the time of the application for the firm commitment of capital advance funds under § 891.820. The mixed-finance proposal must include a description of the proposed project; financing documents, including any firm commitments; a statement of sources and uses of funds; site information; construction cost estimates; a systems life cycle analysis; any relocation plan, if the development will cause displacement; the relationship among participating parties; a demonstration of the operating feasibility of the project for the entire 40-year period of the very-low income restriction on the assisted units; a market analysis; a summary of the proposed management and occupancy policies; a statement regarding existing facilities; any additional environmental information HUD deems necessary in completing its environmental review; and required certifications and assurances.

HUD will review the firm commitment application and mixed-finance proposal under the standards provided in § 891.823. This section requires an initial review for technical deficiencies with an opportunity to supply any missing materials by a date certain, followed by firm commitment and proposal technical processing. The purpose of technical processing is to determine that the project is financially feasible, that the supportive housing funds provided are used in an appropriate manner, that the mixed-finance owner has the legal capacity and experience to develop and operate the project, that the proper zoning is in place, that there are restrictive covenants running with the land guaranteeing that the assisted units will remain available to very-low income elderly persons or very-low income persons with disabilities for a 40-year period, and that other legal and regulatory requirements pertaining to the program are in fact met by the project as proposed in the firm commitment application/mixed-finance proposal.

Once the firm commitment application/mixed-finance proposal is approved, but prior to HUD approval of the release of capital advance funds, § 891.825 requires the sponsor to submit for HUD approval evidentiary materials consisting of the actual documents to support the statements and certifications in the firm commitment application/mixed-finance proposal and other required documents. For example, all the organizational documents of the mixed-finance owner and the general partner, the actual covenants running with the land or deed restriction guaranteeing the availability of the supportive housing units to very-low income eligible persons for 40 years, any zoning documents, any updates to financing documents submitted as part of the proposal, the management contract, evidence of site control, and various required certifications. This section also makes clear that no third-party beneficiary, principal-agent, or other legal relationship (beyond the duty to fulfill the explicit contractual and regulatory requirements) is created with HUD by any of the agreements entered into by the parties to the mixed-finance transaction.

Section 891.830 regulates the drawdown of capital advance funds after all HUD approvals are obtained. Capital advance funds may only be drawn down pursuant to a HUD-approved drawdown schedule, and only in the appropriate amount pro-rated according to the development costs of only the supportive housing units. Each drawdown of funds constitutes a certification by the mixed-finance owner and Nonprofit Organization that all representations and warranties they have made are true, valid and in full force and effect, and all conditions precedent to the drawdown have been satisfied. Such funds may only be used for eligible costs.

Section 891.833 requires HUD to monitor and review all phases of construction and operation to ensure continued compliance with the mixed-finance amendment to the capital advance agreement and all other contractual, legal, and regulatory requirements. Notwithstanding HUD's monitoring role, compliance ultimately is the responsibility of the mixed-finance owner and sponsor.

Section 891.835 states the eligible and ineligible uses of the project rental assistance provided once the project is operating. Importantly for the mixed-finance context, eligible operating costs attributable to the project as a whole, such as for common areas, may be paid from project rental assistance on a pro rata basis, based on the ratio of 202 or 811 units to the total units in the project.

Sections 891.840—891.853 of this interim rule make, respectively, site and neighborhood standards, environmental review, Uniform Relocation Act requirements, design and cost standards (except for the paragraph on amenities,

which are governed for the mixed-finance program by proposed § 891.813(b)), Davis-Bacon labor standards, and development cost limits from the regular 202 or 811 programs applicable in the mixed-finance context. Sections 891.855 and 891.860 of this interim rule, respectively, govern replacement reserve accounts and operating reserves.

Section 891.863 of this interim rule requires that the development maintain the same number of supportive housing units as stated in the capital advance agreement for a 40-year period. This requirement will be enforced by deed restrictions or covenants that will continue to apply regardless of any change in ownership of the development. Section 891.865 of this rule, entitled ''Sanctions,'' provides that HUD may impose sanctions or seek legal and equitable relief in the event that the mixed-finance units are not developed and operated in accordance with all applicable requirements.

## III. Findings and Certifications

*Public Reporting Burden*

To ensure that only feasible proposals for mixed-financing will be developed, HUD is collecting information to assist the agency in determining whether the owner has the financial and administrative capacity needed to develop and manage a mixed-finance project, all funding commitments are in place, the proposed site and supportive services are suitable for the intended residents, the project design meets the physical needs of the residents, and the estimated income can support the operation and maintenance of the project, when built. The regulations will require the mixed-finance owner to submit a full proposal and evidentiary materials for mixed-finance development.

Section 891.818 covers the submission of the firm commitment application and the mixed-finance proposal. This section requires that the Firm Commitment Application be submitted by both the mixed-finance owner and the Nonprofit Organization. However, the documents required for submission with the Firm Commitment Application (as well as the documents required from initial closing through final closing) have not changed from what is required under the regular Section 202 and Section 811 programs. The OMB clearance for the Section 202 and Section 811 Firm Commitment through Final Closing documents are covered under OMB Control No. 2502–0470.

Section 891.820 provides the documentation that Section 202 and Section 811 owners must submit if they are proposing mixed-finance projects pursuant to the AHEOA. If this collection of information were not made, HUD would not be able to ensure that owners are eligible and financially capable of developing mixed-finance developments of Section 202 supportive housing for the elderly or Section 811 supportive housing for persons with disabilities, or otherwise meet other HUD and federal requirements for acceptability. The collection of this information is not currently accounted for under any previous OMB clearance and, therefore, a request for their approval is being made herein.

For mixed-finance proposals, the total estimated paperwork burden is 1,350 hours. The burden of information collection in this proposed rule is estimated as follows:

| Section reference | Number of parties | Number of responses per respondent | Estimated average time for requirement (in hours) | Estimated annual burden (in hours) |
|---|---|---|---|---|
| § 891.820(a), Development Description | 15 | 1 | .5 | 7.5 |
| § 891.820(b), Financing Description | 15 | 1 | 1 | 15 |
| § 891.820(c), Sources and Uses of Financing | 15 | 1 | 8 | 120 |
| § 891.820(d), Site Information | 15 | 1 | 2 | 30 |
| § 891.820(e), Development Construction Cost Estimate | 15 | 1 | 4 | 60 |
| § 891.820(g), Relocation Plan | 15 | 1 | 2 | 30 |
| § 891.820(h) Statement of Activities and Relationship of Parties | 15 | 1 | 1 | 15 |
| § 891.820(i), Documents Showing Operating Feasibility | 15 | 1 | 4 | 60 |
| § 891.820(j), Market Analysis | 15 | 1 | 2 | 30 |
| § 891.820(k), Summary of Proposed Management and Occupancy Policies | 15 | 1 | .5 | 7.5 |
| § 891.820(l), Statement Addressing Facilities and Services | 15 | 1 | .5 | 7.5 |
| § 891.820(m), Environmental Information | 15 | 1 | 4 | 60 |
| § 891.820(n), Certifications and Assurances | 15 | 1 | .5 | 7.5 |
| § 891.825, Evidentiary Materials | 15 | 1 | 60 | 900 |

Total Reporting and Recordkeeping Burden (Hours): 1,350.

In accordance with 5 CFR 1320.8(d)(1), HUD is soliciting comments from members of the public and affected agencies concerning this collection of information to:

(1) Evaluate whether the proposed collection of information is necessary for the proper performance of the functions of the agency, including whether the information will have practical utility;

(2) Evaluate the accuracy of the agency's estimate of the burden of the proposed collection of information;

(3) Enhance the quality, utility, and clarity of the information to be collected; and

(4) Minimize the burden of the collection of information on those who are to respond including through the use of appropriate automated collection techniques or other forms of information technology, *e.g.*, permitting electronic submission of responses.

Interested persons are invited to submit comments regarding the information collection requirements in this proposal. Comments must be received within 30 days from the date of this proposal. Comments must refer to the proposal by name and docket number (FR–4725–I–01) and must be sent to:

Lauren Wittenberg, HUD Desk Officer, Office of Management and Budget, New Executive Office Building, Washington, DC 20503–0009; and

Gloria S. Diggs, Reports Liaison Officer, Office of the Assistant Secretary for Housing-Federal Housing Commissioner, Department of Housing and Urban Development, 451 7th Street SW., Room 9116, Washington, DC 20410–8000.

**Justification for Interim Rulemaking**

In general, the Department publishes a rule for public comment before issuing a rule for effect, in accordance with its own regulations on rulemaking, 24 CFR part 10. However, part 10 does provide for exceptions from that general rule where the agency finds good cause to omit advance notice and public participation. The good cause requirement is satisfied when prior public procedure is ''impracticable, unnecessary, or contrary to the public interest.'' (24 CFR 10.1) The Department finds that good cause exists to publish this rule for effect at the same time as it solicits public comment, because waiting for the completion of public comments prior to making the rule effective would be contrary to the public interest. The public has already expressed interest in going forward with mixed-finance proposals for supportive housing for the elderly or persons with disabilities, and there are already proposals pending that are ready to proceed. No purpose would be served by making those who are prepared to proceed wait for the receipt of public comments, the consideration of those comments by agency decision makers, and the subsequent publication of a final rule. In addition, the rule would provide a significant public benefit, in the form of increased housing opportunities for the elderly and disabled, while, through the leveraging of private resources and state and local tax credits, reducing the amount of Federal expenditure. Therefore, it is in the public interest to issue this rule for effect so that these proposals can go forward expeditiously and the public can have the benefit of the increased development of supportive housing that the rule intends to foster. The Department invites public comment on the rule to assure that consideration is given to the full range of views that may be presented in the development of a final rule that will supersede this interim rule.

*Unfunded Mandates Reform Act*

Title II of the Unfunded Mandates Reform Act of 1995 (2 U.S.C. 1531–1538) (UMRA) establishes requirements for Federal agencies to assess the effects of their regulatory actions on State, local, and tribal governments and the private sector. This rule does not impose any Federal mandate on any state, local, or tribal government or the private sector within the meaning of the UMRA.

*Environmental Impact*

A Finding of No Significant Impact with respect to the environment has been made in accordance with HUD regulations at 24 CFR part 50, which implement section 102(2)(C) of the National Environmental Policy Act of 1969 (42 U.S.C. 4332). The Finding of No Significant Impact is available for public inspection between the hours of 8 a.m. and 5 p.m. weekdays in the Office of Regulations, Office of General Counsel, Room 10276, Department of Housing and Urban Development, 451 Seventh Street SW., Washington, DC 20410–0500.

*Impact on Small Entities*

The Secretary, in accordance with the Regulatory Flexibility Act (5 U.S.C. 605(b)), has reviewed and approved this rule and in so doing certifies that this rule would not have a significant economic impact on a substantial number of small entities. The program will provide capital advances to private Nonprofit Organizations and nonprofit consumer cooperatives to expand the supply of supportive housing for the elderly and to Nonprofit Organizations to expand the supply of supportive housing for persons with disabilities. Private for-profit entities may also participate in the mixed-finance aspect of producing such housing. Although small and private entities may participate in the program, the rule does not impose any legal requirement or mandate upon them and accordingly, will not have a significant impact on them.

Although HUD has determined that this rule would not have a significant economic impact on a substantial number of small entities, HUD welcomes comments regarding any less burdensome alternatives to this rule that will meet HUD's objectives as described in this preamble.

*Federalism Impact*

Executive Order 13132 (entitled ''Federalism'') prohibits, to the extent practicable and permitted by law, an agency from promulgating a regulation that has federalism implications and either imposes substantial direct compliance costs on state and local governments and is not required by statute, or preempts state law, unless the relevant requirements of section 6 of the Executive Order are met. This rule does not have federalism implications and does not impose substantial direct compliance costs on state and local governments or preempt state law within the meaning of the Executive Order.

*Executive Order 12866, Regulatory Planning and Review*

The Office of Management and Budget (OMB) reviewed this rule under Executive Order 12866 (entitled ''Regulatory Planning and Review''). OMB determined that this rule is a ''significant regulatory action,'' as defined in section 3(f) of the Order (although not economically significant, as provided in section 3(f)(1) of the Order). Any changes made to the rule subsequent to its submission to OMB are identified in the docket file, which is available for public inspection in the office of the Rules Docket Clerk, Room 10276, U.S. Department of Housing and Urban Development, 451 Seventh Street SW., Washington, DC 20410–0500.

**List of Subjects in 24 CFR Part 891**

Aged, Civil rights, Grant programs—housing and community development, Individuals with disabilities, Loan programs—housing and community development, Low and moderate income housing, Mental health programs, Rent subsidies, Reporting and recordkeeping requirements.

(The catalogue of Federal domestic assistance numbers for the programs in this rule are: 14.157 and 14.181.)

■ For the reasons discussed in this preamble, HUD amends 24 CFR part 891 as follows:

## PART 891—SUPPORTIVE HOUSING FOR THE ELDERLY AND PERSONS WITH DISABILITIES

■ 1. The authority citation for part 891 continues to read as follows:

**Authority:** 12 U.S.C. 1701q; 42 U.S.C. 1437f, 3535(d), and 8013.

### Subpart A—General Program Requirements

■ 2. Amend 24 CFR 891.105 by revising the definition of ''Replacement reserve account'' to read as follows:

**§ 891.105 Definitions.**

* * * * *

*Replacement reserve account* means a project account into which funds are deposited, which may be used only with the approval of the Secretary for repairs, replacement, capital improvements to the project, and retrofitting to reduce the number of units as provided by 24 CFR 891.405(d).

■ 3. Amend 24 CFR 891.120 by adding a new paragraph 891.120(e) to read as follows:

**§ 891.120 Project design and cost standards.**

* * * * *

(e) Projects under this part may have on their sites commercial facilities for the benefit of residents of the project and of the community in which the project is located, so long as the commercial facilities are not subsidized with funding under the supportive housing programs for the elderly or persons with disabilities. Such commercial facilities are considered public accommodations under Title III of the Americans with Disabilities Act and must be accessible under the requirements of that Act.

## Subpart B—202 Supportive Housing for the Elderly

■ 4. Amend 24 CFR 891.205 by revising the definition of ''acquisition'' in § 891.205 to read as follows:

**§ 891.205 Definitions.**

* * * * *

*Acquisition* means the purchase of (or otherwise obtaining title to) existing housing and related facilities.

## Subpart C—Section 811 Supportive Housing for Persons With Disabilities

■ 5. Amend 24 CFR 891.305 by revising the definition of ''acquisition'' in § 891.305 to read as follows:

**§ 891.305 Definitions.**

* * * * *

*Acquisition* means the purchase of (or otherwise obtaining title to) existing structures to be used as housing for persons with disabilities.

* * * * *

## Subpart D—Project Management

■ 6. Amend 24 CFR 891.405 by adding a sentence to the end of paragraph 891.405(d) to read as follows:

**§ 891.405 Replacement reserve.**

* * * * *

(d) * * * With HUD approval, reserves may be used to reduce the number of dwelling units, provided that the purpose for the reduction is the retrofitting of obsolete or unmarketable units.

■ 7. Add a new subpart F to read as follows:

### Subpart F—For-Profit Limited Partnerships and Mixed-Finance Development for Supportive Housing for the Elderly or Persons With Disabilities

Sec.

891.800 Purpose.
891.802 Applicability of other provisions.
891.805 Definitions.
891.808 Capital advance funds.
891.809 Limitations on capital advance funds.
891.810 Project rental assistance.
891.813 Eligible uses for assistance provided under this subpart.
891.815 Developer's fee.
891.818 Firm commitment application.
891.820 Mixed-finance proposal.
891.823 HUD review and approval.
891.825 Evidentiary materials.
891.828 Loan of capital advance funds to mixed-finance owner.
891.830 Drawdown.
891.833 Monitoring and review.
891.835 Eligible uses of project rental assistance.
891.840 Site and neighborhood standards.
891.843 Environmental review and approval.
891.845 Relocation requirements.
891.848 Project design and cost standards.
891.850 Labor standards.
891.853 Development cost limits.
891.855 Replacement reserves.
891.860 Operating reserves.
891.863 Maintenance as supportive housing units.
891.865 Sanctions.

**§ 891.800 Purpose.**

The purpose of this subpart is to establish rules allowing for, and regulating the participation of, for-profit limited partnerships, of which the sole general partner is a Nonprofit Organization meeting the requirements of 12 U.S.C. 1701q(k)(4) or 42 U.S.C. 8032(k)(6), in the development of supportive housing for the elderly and persons with disabilities using mixed-finance development methods. These rules are intended to develop more supportive housing for the elderly and persons with disabilities by using Federal assistance, private capital and expertise, and tax credits.

**§ 891.802 Applicability of other provisions.**

The provisions of 24 CFR part 891, subparts A–D, apply to this subpart F unless otherwise stated.

**§ 891.805 Definitions.**

In addition to the definitions at § 891.105, the following definitions apply to this subpart:

*Mixed-finance owner,* for the purpose of the mixed-finance development of supportive housing under this subpart, means a for-profit limited partnership of which a Single-Purpose Private Nonprofit Organization (in the case of supportive housing for the elderly), or a Single-Purpose Nonprofit Organization with a 501(c)(3) tax exemption (in the case of supportive housing for the disabled) is the sole general partner. The purpose of the mixed-finance owner must include the promotion of the welfare of the elderly or persons with disabilities, as appropriate.

*Single-Purpose Private Nonprofit Organization* (in the case of supportive housing for the elderly) or *Single-Purpose Nonprofit Organization* (in the case of supportive housing for persons with disabilities) (for the purposes of this subpart, both types of organization are referred to as ''Nonprofit Organization''), for the purpose of this subpart, means any institution or foundation:

(1) In the case of supportive housing for the elderly, that meets the requirements of the definition of ''private nonprofit organization'' found in § 891.205 of this title; or

(2) In the case of supportive housing for persons with disabilities, that meets the requirements of the definition of ''nonprofit organization'' in § 891.305 of this title; and that

(3) Is the general partner of a for-profit limited partnership, if the Nonprofit Organization meets the requirements of this definition and owns at least one-hundredth of one percent of the partnership assets, or is a nonprofit corporation wholly owned and controlled by a Nonprofit Organization meeting those requirements. If the project will include units financed with the use of Federal Low-Income Housing Tax Credits and the organization is a limited partnership, the limited partnership must meet the requirements of section 42 of the IRS code, including the requirements of section 42(h)(5).

**§ 891.808 Capital advance funds.**

(a) HUD is authorized to provide capital advance funds to expand the supply of housing for the elderly and persons with disabilities in accordance with the rules and regulations of the Section 202 and 811 supportive housing programs. For mixed-finance projects, HUD provides a capital advance funds reservation to the sponsor, which transfers the fund reservation to the Nonprofit Organization, which is general partner of a for-profit limited partnership meeting the requirements of this subpart. HUD then provides the capital advance funds to the Nonprofit Organization, which makes a non-amortizing loan to the mixed-finance owner to be repaid within 40 years at the 202 or 811 interest rate in effect on the date of the closing of the capital advance. The capital advance funds may be provided as a loan in the case of a mixed-finance project using a nine percent tax credit, and as a pass-through to the limited partnership in the case of mixed-finance projects using tax-exempt bonds with four percent tax credit. The capital advance funds will be disbursed under a disbursement escrow agreement

upon HUD approval of the mixed-finance draw down.

(b) Developments built with mixed-finance funds may combine assisted supportive housing units with market rate units. However, the number of Section 202 or 811 units in the development funded with the capital advance must be not less than the number of units that could have been developed with the capital advance without the use of mixed funding sources. In the case of a Section 811 mixed-finance project, the additional units cannot cause the project to exceed the applicable Section 811 project size limit if they will also house persons with disabilities.

**§ 891.809 Limitations on capital advance funds.**

Capital advances are not available in connection with:

(a) Acquisition of facilities currently owned and operated by the sponsor as housing for the elderly, except with rehabilitation as defined in 24 CFR 891.105;

(b) The financing or refinancing of federally assisted or insured projects;

(c) Facilities currently owned and operated by the sponsor as housing for persons with disabilities, except with rehabilitation as defined in 24 CFR 891.105; or

(d) Units in Section 202 direct loan projects previously refinanced under the provisions of Section 811 of the American Homeownership and Economic Opportunity Act of 2000, 12 U.S.C. 1701q *note.*

**§ 891.810 Project rental assistance.**

Project Rental Assistance is defined in § 891.105. Project Rental Assistance is provided for operating costs, not covered by tenant contributions, attributable to the number of units funded by capital advances under the Section 202 and 811 supportive housing programs, subject to the provisions of 24 CFR 891.445. The sponsor of a mixed-finance development must obtain the necessary funds from a source other than project rental assistance funds for operating costs related to non-202 or -811 units.

**§ 891.813 Eligible uses for assistance provided under this subpart.**

(a) Assistance under this subpart may be used to finance the construction, reconstruction, or rehabilitation of a structure or a portion of a structure; or the acquisition of a structure to be used as supportive housing for the elderly; or the acquisition of housing to be used as supportive housing for persons with disabilities. Such assistance may also cover the cost of real property acquisition, site improvement, conversion, demolition, relocation, and other expenses that the Secretary determines are necessary to expand the supply of supportive housing for the elderly and persons with disabilities.

(b) Assistance under this subpart may not be used for excess amenities, as stated in 24 CFR 891.120(c). Such amenities may be included in a mixed-finance development only if:

(1) The amenities are not financed with funds provided under the section 202 or 811 program;

(2) The amenities are not maintained and operated with section 202 or 811 funds;

(3) The amenities are designed with appropriate safeguards for the residents' health and safety; and

(4) The assisted residents are not required to use, participate in, or pay a fee for the use or maintenance of the amenities, although they are permitted to do so voluntarily. Any fee charged for the use, maintenance, or access to amenities by residents must be reasonable and affordable for all residents of the development.

(c) Notwithstanding any other provision of this section, §§ 891.220 and 891.315 on ''prohibited facilities'' apply to mixed-finance projects containing units assisted under section 202 or 811.

**§ 891.815 Developer's fee.**

(a) *Developer's fee cap.* No developer's fee shall be paid in excess of nine percent of the total project replacement costs.

(b) *Use of capital advance towards developer's fee.* A maximum of eight percent of the capital advance may be used towards payment of the developer's fee.

(c) *Eligible and ineligible uses of developer's fee.* (1) a developer's fee may be used to pay costs associated with developing the mixed-finance project, including, but not limited to:

(A) Reasonable profit and overhead of up to six percent of the total construction cost;

(B) The costs of necessary change orders approved by HUD prior to final project completion;

(C) Housing consultant services;

(D) Organizational expenses;

(E) The owner's cash requirement prior to initial closing, except as stated in paragraph (c)(2) of this section;

(F) Increased taxes and insurance caused by unavoidable delays in construction;

(G) Increases in otherwise eligible non-construction line items;

(H) Environmental studies;

(I) Appraisal costs;

(J) Capital expenditures, such as major moveable furnishings and equipment, including, but not limited to, office and maintenance equipment and furnishings for the public areas;

(K) Costs directly related to the rent-up of the project, such as advertisement;

(L) Accruals for taxes and insurance after completion of construction if current income from the project is insufficient to meet such accruals;

(M) Project contingency items for which two percent of the developer's fee is withheld at HUD approval of the capital advance; and

(N) Cost of obtaining a project cost estimate.

(2) A developer's fee may not be used for the following:

(A) Excess amenities;

(B) Fees to the architect and attorney above those contractually agreed to;

(C) Non-major equipment and furnishings;

(D) Items with short life cycles, such as office and maintenance supplies;

(E) Furnishings within the residential units; and

(F) Motor vehicles.

(d) *Unused developer's fee.* Amounts set aside from the 202 or 811 capital advance funds for the developer's fee that remain unused after the completion of construction are deposited in the project's replacement reserve account at project completion.

**§ 891.818 Firm commitment application.**

(a) *New construction.* The mixed-finance owner and the Nonprofit Organization shall submit an application for a firm commitment for capital advance funding. The application shall consist of the required application form HUD 92013 and additional materials, including:

(1) Form HUD 92013–Supp, and any other supplementary forms or attachments to the application form that HUD requires;

(2) Organizational documents of the mixed-finance owner, including the partnership documents and organizational documents of the Nonprofit Organization that will receive the capital advance, together with an incumbency certificate listing all duly qualified and sitting officers and directors by title and the beginning and ending dates of each person's term;

(3) The name and address of the mixed-finance owner and the Nonprofit Organization, and the name, title, address, and telephone number of the respective officers to whom communications should be addressed;

(4) A balance sheet showing that the mixed-finance owner is adequately capitalized;

(5) Evidence that the sponsor, mixed-finance owner, or the Nonprofit Organization has control of the site of the proposed mixed-finance development, along with a legal description of the proposed site and a title report covering the site;

(6) The mixed-finance owner's submission showing proposed amounts and uses of the developer's fee, demonstrating compliance with 24 CFR 891.823;

(7) Evidence that the zoning for the site of the proposed mixed-finance project complies with existing zoning, or that any necessary zoning approvals or variances have been obtained;

(8) Number of units (with bedroom count) for which funds have been reserved under section 202 or 811, and, in the case of section 811 units, the population to be served in those units; the number of units (with bedroom count) funded or financed from sources other than section 202 or 811, if any (if 811, the population to be served in the non-811 units including the number of persons with disabilities, if applicable); the types and amounts of non-dwelling space to be provided; whether the assisted units will be floating or designated fixed units (Uniform Federal Accessibility Standards (UFAS) accessible units must always be designated fixed units); evidence demonstrating that the development will comply with all fair housing and accessibility requirements, including the design and construction requirements of the Fair Housing Act; evidence demonstrating that units serving persons with disabilities will be dispersed throughout the development in the most integrated environment possible and other requirements of section 504 of the Rehabilitation Act of 1973; evidence demonstrating that the project will comply with accessibility requirements, project standards, and site and neighborhood standards under 24 CFR 891.120, 891.125, 891.210, 891.310, and 891.320, as applicable; and evidence demonstrating that the project will comply with 24 CFR 8.4(b)(5), which prohibits the selection of a site or location which has the purpose or effect of excluding persons with disabilities from federally-assisted programs or activities;

(9) The proposed development schedule for completion of the mixed-finance development, including the estimated time to complete each major development stage. If a mixed-finance development proposal will be implemented in phases, the mixed-finance owner must include in its proposal a general description of each planned phase of development, including:

(A) The overall number of phases;

(B) The intended scope of each phase (including number of units);

(C) The anticipated sources and uses of financing for each phase; and

(D) A schedule (to be approved by HUD) for submission of a supplementary proposal for each phase;

(10) A previous participation certificate for all officers and directors of the sponsor, mixed-finance owner, Nonprofit Organization, developer, housing consultant, general contractor, and management agent;

(11) Identification of the housing consultant, if one is employed;

(12) A mixed-finance owner-Architect Agreement;

(13) Final Working drawings and specifications with the architect's certificate that the project design has been reviewed and approved by the local Building Department;

(14) Topographic survey, surveyor's report, and soil test borings;

(15) Life Cycle cost analysis of utility combinations;

(16) Affirmative Fair Housing Marketing Plan;

(17) Current resumes of general contractor's development experience and general contractor's financial statements for the last three years;

(18) Contractor's cost breakdown and cost analysis;

(19) Resume of resident manager or management agent, which includes qualifications and experience;

(20) Schedule of capital expenditures such as furniture, supplies, equipment, and other items necessary to the basic operation of the project that will not be covered by proceeds from the capital advance, and a description of how the development will meet these costs;

(21) Certification/disclosure of lobbying activities by the mixed-finance owner and the Single-Purpose Nonprofit Organization;

(22) Consolidated owner certifications for the mixed-finance owner, including the certification required by OMB circular A–129; Equal Employment Opportunity certification; certification of drug-free workplace; certification of compliance with design and cost standards; the Uniform Federal Accessibility Standards, section 504 of the Rehabilitation Act of 1973; and, for covered multifamily dwellings designed and constructed for first occupancy after March 13, 1991, the design and construction requirements of the Fair Housing Act and the Americans with Disabilities Act where applicable, and HUD's implementing regulations;

(23) Certification of Compliance with Davis-Bacon prevailing wage requirements and related labor standards;

(24) Flood Disaster Protection Act of 1973 Certification;

(25) Certification of compliance with the National Environmental Policy Act and related environmental laws and authorities; and

(26) Certification that the information in the firm commitment application is true and accurate.

(b) *Acquisition with rehabilitation.* In the case of acquisition with rehabilitation, the mixed-finance owner must submit the documentation required in paragraph (a) of this section, as well as:

(1) An authorization to inspect the project;

(2) A description of the proposed rehabilitation and a description of any steps to be taken to make the development accessible to persons with disabilities;

(3) Final drawings and specifications of the units as proposed to be rehabilitated, including any structural changes, changes in floor plans, locations of the fixed UFAS accessible units and other units serving persons with disabilities dispersed within the project, or other significant alterations;

(4) A survey or site plan drawing of the development as built; and

(5) Drawings and specifications of the existing facilities, if such drawings can be obtained.

(c) *Acquisition without rehabilitation.* In the case of acquisition without rehabilitation, the mixed-finance owner must submit the documentation required in paragraph (a) of this section (except for paragraphs (a)(13) and (23)), as well as:

(1) An authorization to inspect the project;

(2) A narrative description of any repair work proposed, and the manner in which the project will be made accessible to persons with disabilities;

(3) A survey or site plan drawing of the development as built;

(4) Drawings and specifications of the existing facilities, if such drawings can be obtained.

(d) *Lead-based paint certification.* In the case of acquired developments constructed before 1978 in which any child under six years of age resides or is expected to reside, the mixed-finance owner must also submit a certification of compliance with the Lead-Based Paint Poisoning Prevention Act and the Residential Lead-Based Paint Hazard Reduction Act of 1992.

**§ 891.820 Mixed-finance proposal.**

The mixed-finance owner must submit a mixed-finance proposal along

with the firm commitment application. Each mixed-finance development proposal shall be in the form prescribed by HUD and must contain the following information:

(a) *Development description.* A description of the proposed project including: the number and types of units with bedroom count; the number of 202 or 811 units and the number of units to be financed from funds other than 202 or 811 funds; the types and amounts of non-dwelling space to be provided; schematic drawings and designs; the proposed building and unit plans including the location of the fixed UFAS accessible units and other units serving persons with disabilities dispersed within the project; and final plans and specifications.

(b) *Financing.* A detailed description of all financing necessary for the implementation of the proposal, specifying the sources, together with a 5-year operating performance projection, known as a ''pro forma'' (pro forma), for the development, including all underlying assumptions. In addition, the mixed-finance owner is required to submit to HUD for approval all documents relating to the financing of the proposal, including, but not limited to, any loan agreements, financing commitments, notes, mortgages, or deeds of trust, use restrictions, operating pro formas relating to the viability of the development, and other agreements or documents pertaining to the financing of the proposal. If tax credits are being used, the mixed-finance owner must submit official confirmation of the award of tax credits from the State allocating agency. Any financing commitments must be firm and irrevocable in order to be approved by HUD.

(c) *Sources and uses.* A statement of the sources and uses of financing; if a project is to be developed in phases, the sources and uses of financing for each phase;

(d) *Site information.* An identification and description of the proposed site, site plan, and neighborhood.

(e) *Development construction cost estimate.* A development construction cost estimate based on the schematic drawings and specifications and current construction costs prevailing in the area. In addition, a copy of the development schedule, including the architect or contractor estimate of the time required to complete each major development stage.

(f) *Life cycle analysis.* For mixed-finance projects with new construction or rehabilitation, the criteria to be used in equipping the proposed development with heating and cooling systems, which shall include a life-cycle cost analysis of the installation, maintenance, and operating costs of such systems.

(g) *Relocation plan.* Information concerning any displacement of current site occupants, including identification of each displacee, the distribution plan for notices, the anticipated cost and source for funding of relocation benefits, and compliance with 24 CFR 891.155(e).

(h) *Activities and relationship of participating parties.* Identification of: (1) The participating parties, together with full information as to any conflict-of-interest or identity-of-interest between any of the parties, including the general partner, limited partners, mixed-finance owner, Nonprofit Organization, 202 or 811 sponsors, and development team members;

(2) The activities to be undertaken by each of the participating parties; the legal and business relationships among the participating parties; and

(3) The rights and liabilities (financial and otherwise) and respective commitments of the parties with respect to the development;

(i) *Operating feasibility.* A demonstration of the operating feasibility of the development, which must be accomplished by:

(1) Showing that the estimated operating expenses of the development will not exceed its estimated operating income; and

(2) Submitting a 5-year operating pro forma for the development, and including all underlying assumptions and, if the project is a tax-credit project, a pro forma showing how the project will continue to operate for the required period after the end of the tax-credit period;

(j) *Market analysis.* An analysis of the projected market for the proposed mixed-finance development;

(k) *Management and occupancy policies.* A summary of the proposed management and occupancy policies to be implemented for the assisted units at the development, consistent with § 891.410, and a description of application and tenant selection procedures for the units without HUD funding;

(l) *Facilities.* A statement addressing the adequacy of existing facilities and services for the prospective occupants of the development and a description of public improvements needed to ensure the viability of the proposed development with a description of the sources of funds available to carry out such improvements;

(m) *Environmental review.* Any additional environmental information HUD deems necessary in completing its environmental review;

(n) *Certifications and assurances.* (1) Certificates and assurances that the mixed-finance owner has authority under State and local law to develop housing for elderly persons or persons with disabilities and to enter into all agreements and provide all assurances required under this subpart. In addition, the Nonprofit Organization must certify that it has the legal authority to enter into the partnership agreement under which it acts as the sole general partner with for-profit limited partners and to fulfill all its obligations as partner. The Nonprofit Organization must also certify that it has obtained all necessary approvals for this purpose. The mixed-finance owner will be responsible to HUD for ensuring that the 202 or 811 units are developed and operated in accordance with all applicable HUD requirements. The mixed-finance owner must also warrant that it will provide for a mechanism to assure, to HUD's satisfaction, that the 202 or 811 units will remain available for use by very low-income families for 40 years;

(2) A certification of the mixed-finance owner's previous participation as stated in 24 CFR part 200, subpart H, and shall ensure that all participating parties submit a similar certification to HUD.

(o) *Other.* The mixed-finance owner must provide any other materials or information that HUD may from time to time require.

**§ 891.823 HUD review and approval.**

HUD will review the firm commitment application and mixed-finance proposal as follows.

(a) *Initial screening.* HUD will perform an initial screening of the firm commitment application/mixed-finance proposal to determine that all required documentation and evidentiary materials have been submitted. HUD will advise the mixed-finance owner and Nonprofit Organization of any technical deficiencies in the application and proposal and indicate a date certain by which the remaining information must be submitted.

(b) *Firm commitment and proposal technical processing and approval.* Upon determining that the firm commitment and proposal are complete, HUD will process the firm commitment application and mixed-finance proposal for approval. The firm commitment application will be reviewed in accordance with applicable firm commitment and technical review guidelines. Upon determining that a proposal is acceptable for technical

processing, HUD will evaluate the proposal to determine:

(1) Whether the mixed-finance owner has the legal capacity to enter into all necessary contracts and agreements to complete the development;

(2) Whether the proposed sources and uses of funds are eligible and reasonable, and show an appropriate proration of supportive housing funds and funds from other sources, and whether the project, including the market-rate units, is financially feasible and is projected to remain feasible for the 40-year term of the very low-income use restrictions, given the available financing structure, firm financing commitments, and market for the project;

(3) Whether the mixed-finance owner has the resources and capacity to develop and operate the project for the required time period;

(4) Whether the HUD-assisted units are comparable in size, location, appearance, and design to any units without HUD assistance;

(5) Whether the mixed-finance owner will develop and operate the Section 202 or 811 assisted units in accordance with all HUD program requirements, including program regulations governing those units;

(6) Whether the documents include the required covenants and use restrictions, which must be recorded prior to release of HUD funds;

(7) Whether the mixed-finance owner has obtained all necessary State, local, and Federal approvals, zoning changes, or variances;

(8) Whether the design of the development meets applicable accessibility requirements;

(9) Whether the supportive services to be provided for the Section 202 or 811 units are at least equal to the services the sponsor proposed to provide in its 202 or 811 application for funding;

(10) Whether the assistance to be provided under this part, taking into account all assistance to be received by the project, is no more than necessary to provide affordable housing, as required by section 102(d) of the Department of Housing and Urban Development Reform Act of 1989, 42 U.S.C. 3545(d);

(11) Whether any other processing criteria that HUD may prescribe from time to time are satisfied;

(12) Whether the mixed-finance owner has certified to compliance:

(i) With all applicable Federal, State, or local civil rights laws and regulations;

(ii) With all environmental regulations;

(iii) With applicable wage rates determined in accordance with the Davis-Bacon Act and with related labor standards.

**§ 891.825 Evidentiary materials.**

Any updates or amendments to materials submitted at the firm commitment/mixed-finance proposal stage must be submitted as part of the evidentiary materials, even if not specifically requested.

(a) *General.* Except as otherwise expressly provided, a mixed-finance owner is required to submit for HUD review and approval prior to HUD's approval of the release or drawdown of capital advance funds all evidentiary materials required by HUD. Upon HUD approval of evidentiary materials, the evidentiary materials will be executed and recorded in the order required by HUD, along with other required documents. All the executed documents for the mixed-finance project will be made available for HUD's final review before drawdown of funds. The evidentiary materials must include:

(1) *Organizational documents.* Updated organizational documents of the mixed-finance owner, nonprofit organization, and all participating parties in the partnership showing that:

(i) One of the purposes of the mixed-finance owner is the promotion of the welfare of elderly persons or persons with disabilities;

(ii) There is no prohibited conflict of interest or prohibited identity of interest involving the sponsor, the nonprofit organization, or the mixed-finance owner, and the mixed-finance owner is not controlled by or under the direction of persons or firms seeking to derive profit or gain from the mixed-finance owner. Individual conflict of interest and identity of interest and disclosure certifications must be submitted by all directors, officers, shareholders, trustees, and agents of the mixed-finance owner and the nonprofit organization and all development team members; and

(iii) A partnership agreement has been entered into between the mixed-finance owner, its general partner, and any other participating entities that establishes the relationship of the partners with respect to implementation of the proposal.

(2) *Amendment to capital advance.* A mixed-finance amendment to the capital advance agreement.

(3) *Deed; declaration of covenants or deed restriction.* A deed or ground lease to the mixed-finance owner with a declaration of covenants or deed restriction, and a pro forma title policy. The first recorded document must be a covenant running with the land, deed restriction, Use Agreement, or other document of public record in the form prescribed by HUD that will assure to HUD's satisfaction that the HUD-assisted units will be available for use by eligible very low-income elderly or disabled families in accordance with all applicable requirements for no less than 40 years, and that any party that subsequently acquires the mixed-finance development will be fully bound under these covenants and deed restrictions;

(4) *Zoning.* Evidence that the zoning of the site permits construction of the mixed-finance development;

(5) *Site control.* Evidence that the sponsor, nonprofit organization, or mixed-finance owner has control of the site for such period of time as may be required by HUD, and a title policy or report evidencing that the site is free of any encumbrances, restrictions, or reverters that could adversely affect use of the site for the proposed project;

(6) *Development agreement.* Any development agreement or agreements, or other document showing the proposed development schedule; the respective responsibilities of each party for each development phase; the expected costs and financing for those costs; the allocation of risk of loss as between or among the parties; and guarantees of completion, insurance, and bonding requirements as applicable to regular 202 and 811 projects;

(7) *Regulatory agreement.* A regulatory or operating agreement that provides binding assurance that operation of the 202 or 811 units will be in accordance with the applicable Section 202 or 811 requirements;

(8) *Management agreement.* Any agreement relating to management of the Section 202 or 811 development by an entity other than the mixed-finance owner or the nonprofit organization, requiring that the management of the project will be in accordance with Section 202 or 811 requirements;

(9) *Financing documents.* Any updates to the financing and firm commitment documents required under the mixed-Finance Proposal;

(10) *Federal subsidies.* A description of the amount and source of any housing assistance that the project will receive from a state, unit of local government, or the Federal government, as required by section 102(d) of the HUD Reform Act of 1989, 42 U.S.C. 3545(d);

(11) *Certification of compliance with approved proposal.* The mixed-finance owner's certification that it will develop and operate the number of 202 or 811 units approved by HUD, in the configuration and with the bedroom sizes approved by HUD, within the approved cost limits; and comply with

all applicable statutory, regulatory, and Executive Order requirements for the 40-year period required by law and in accordance with the HUD-approved proposal;

(12) *Legal opinion.* A legal opinion supporting the legal capacity of the mixed-finance owner and its affiliates to enter into all necessary agreements to develop and operate the mixed-finance project, as well as the validity and priority of the covenants and restrictions of the mixed-finance documents. The legal opinion must attest that the counsel has examined the availability of the participating parties' financing, the amounts and sources of financing committed to the mixed-finance project by the participating parties, and that such financing has been irrevocably committed for use in carrying out the project;

(13) *No assignment.* A statement by the mixed-finance owner and the nonprofit organization, which must be included in all agreements and contracts with participating parties, that a transfer of 202 or 811 capital advance funds or rental assistance to the mixed-finance owner shall not be deemed an assignment of the funds, and the transferee shall not succeed to any rights or benefits of the nonprofit organization under the capital advance agreement;

(14) *No third-party beneficiary relationship.* A statement to be included in the capital advance agreement and the mixed-finance amendment to the capital advance agreement that nothing in the capital advance agreement or mixed-finance amendment to the capital advance agreement shall be deemed to create a relationship of third party beneficiary, principal-agent, or any relationship involving HUD.

(15) *Additional certifications.* The owner's certification to:

(i) Compliance with all applicable Federal, State, or local civil rights requirements;

(ii) Compliance with all deed conditions and covenants running with the land, including the requirement not to dispose of the development without the prior written approval of HUD for the entire period that the use restrictions for the assisted housing remain in effect;

(b) *Other.* The mixed-finance owner must submit such other evidentiary materials as HUD may require.

**§ 891.828 Loan of capital advance funds to mixed-finance owner.**

Upon issuance of the firm commitment for capital advance financing, the nonprofit organization to which has been transferred the fund reservation by the sponsor, shall execute a capital advance agreement and an agreement to enter into a Project Rental Assistance Contract with HUD. Upon approval of the mixed-finance proposal and the evidentiary materials, the mixed-finance owner shall provide a Note evidencing a non-amortizing loan of the capital advance funds for a period of not less than 40 years at the program interest rate in effect on the date of the Note. The mixed-finance owner shall execute and record a use agreement, which shall include a complete legal description of the project site and which shall be accompanied by a title insurance policy or commitment insuring the validity and priority of the use agreement. Capital advance funds can be drawn down under a disbursement and escrow agreement in accordance with § 891.830.

**§ 891.830 Drawdown.**

(a) Upon its approval of the executed evidentiary materials and other documents submitted and upon determining that such documents are satisfactory, HUD may approve the drawdown of capital advance funds in accordance with the HUD-approved drawdown schedule.

(b) The capital advance funds may only be drawn down in an approved ratio to other funds, in accordance with a drawdown schedule approved by HUD. The nonprofit organization and the mixed-finance owner shall certify, in a form prescribed by HUD, prior to the initial drawdown of capital advance funds, that they will not draw down more capital advance funds than necessary to meet the pro rata share of the development costs for the 202 or 811 units. The nonprofit organization and the mixed-finance owner shall draw down capital advance funds only when payment is due and after inspection and acceptance of work covered by the draw.

(c) Each drawdown of funds constitutes a certification by the mixed-finance owner and the nonprofit organization that:

(1) All the representations and warranties submitted in accordance with this subpart continue to be valid, true, and in full force and effect;

(2) All parties are in compliance with their obligations pursuant to this subpart which, by their terms, are applicable at the time of the drawdown of funds;

(3) All conditions precedent to the drawdown of the funds by the nonprofit organization and the mixed-finance owner have been satisfied;

(4) The capital advance funds drawn down will be used only for eligible costs actually incurred in accordance with the provisions of this subpart and the approved proposal; and

(5) The amount of the drawdown is consistent with the ratio of 202 or 811 units to other units.

**§ 891.833 Monitoring and review.**

HUD shall monitor and review the development during the construction and operational phases in accordance with the requirements that HUD prescribes in the mixed-finance amendment to the capital advance agreement. In order for units assisted under the 202 and 811 programs to continue to receive project rental assistance, they must be operated in accordance with the mixed-finance amendment to the capital advance agreement and all other HUD regulations and requirements. It is the responsibility of the mixed-finance owner and nonprofit organization to ensure compliance with the preceding sentence.

**§ 891.835 Eligible uses of project rental assistance.**

(a) Section 202 or 811 project rental assistance may be used to pay the necessary and reasonable operating costs, as defined in 24 CFR 891.105 and approved by HUD, not met from project income and attributed to Section 202 or 811 units. Operating cost standards under 24 CFR 891.150 apply to developments under this part.

(b) Section 202 or 811 project rental assistance may not be used to pay for:

(1) Debt service on construction or permanent financing, or any refinancing thereof, for any units in the development, including the 202 or 811 units;

(2) Cash flow distributions to owners; or

(3) Creation of reserves for non-202 or -811 units.

(c) HUD-approved operating costs attributable to common areas or to the development as a whole, such as groundskeeping costs and general administrative costs, may be paid from project rental assistance on a pro-rata basis according to the percentage of 202 or 811 assisted units as compared to the total number of units.

**§ 891.840 Site and neighborhood standards.**

For Section 202 or 811 mixed-finance developments, the site and neighborhood standards described at § 891.125 and § 891.320 apply to the entire mixed-finance development.

**§ 891.848 Project design and cost standards.**

The project design and cost standards at § 891.120, with the exception of subsection (c), apply to mixed-finance developments under this subpart. Sections 891.220 and 891.315 on prohibited facilities shall apply to mixed-finance developments under this subpart.

**§ 891.853 Development cost limits.**

The Development cost limits for development activities, as established at § 891.140, apply to Section 202 or 811 units in mixed-finance developments under this subpart.

**§ 891.855 Replacement reserves.**

(a) The mixed-finance owner shall establish and maintain a replacement reserve account for section 202 or 811 units. This account must meet all the requirements of 24 CFR 891.405.

(b) The mixed-finance owner may obtain a disbursement from the reserve only if the funds will be used to pay for capital replacement costs for the Section 202 or 811 units in the mixed-finance development and in accordance with the terms of the regulatory and operating agreement. In the event of a disposition of the mixed-finance development, or the dissolution of the owner, any Section 202 or 811 funds remaining in the replacement reserve account must remain dedicated to the Section 202 or 811 units to ensure their long-term viability, or as otherwise agreed by HUD.

(c) Subject to HUD's approval, reserves may be used to reduce the number of dwelling units in the development for the purpose of retrofitting units that are obsolete or unmarketable.

**§ 891.860 Operating reserves.**

(a) The mixed-finance owner shall maintain an operating reserve account in an amount sufficient to cover the operating expenses of the development for a three-month period.

(b) Project income and tax credit equity may be used to fund the operating reserve account.

**§ 891.863 Maintenance as supportive housing units for elderly persons and persons with disabilities.**

(a) The mixed-finance owner must develop and continue to operate the same number of supportive housing units for elderly persons or persons with disabilities, as stated in the mixed-finance amendment to the capital advance agreement, for a 40-year period.

(b) If a mixed-finance development proposal provides that the Section 202 or 811 supportive housing units will be floating units, the mixed-finance owner must operate the HUD-approved percentage of Section 202 or 811 supportive housing units, and maintain the percentage distribution of bedroom sizes of Section 202 or 811 supportive housing units, for the entire term of the very low-income use restrictions on the development. Any foreclosure, sale, or other transfer of the development must be subject to a covenant running with the land requiring the continued adherence to the very low-income use restrictions for the Section 202 or 811 supportive housing units.

(c) The Owner must ensure that Section 202 or 811 units in the development are and continue to be comparable to unassisted units in terms of location, size, appearance, and amenities.

**§ 891.865 Sanctions.**

In the event that Section 202 or 811 units are not developed and operated in accordance with all applicable Federal requirements, HUD may impose sanctions on the participating parties and seek legal or equitable relief in enforcing all requirements under section 202, the Housing Act of 1959, or section 811 of the National Affordable Housing Act, all implementing regulations and requirements and contractual obligations under the mixed-finance documents.

Dated: November 3, 2003.

**John C. Weicher,**

*Assistant Secretary for Housing-Federal Housing Commissioner.*

[FR Doc. 03–29749 Filed 11–28–03; 8:45 am]

BILLING CODE 4210–27–P

Federal Register

Monday,
December 1, 2003

# Part IV

# Department of Transportation

## Federal Aviation Administration

**14 CFR Parts 36 and 91**

**Stage 4 Aircraft Noise Standards; Proposed Rule**

**DEPARTMENT OF TRANSPORTATION**

**Federal Aviation Administration**

**14 CFR Parts 36 and 91**

**[Docket No. FAA–2003–16526; Notice No. 03–12]**

**RIN 2120–AH99**

## Stage 4 Aircraft Noise Standards

**AGENCY:** Federal Aviation Administration (FAA), DOT.

**ACTION:** Notice of Proposed Rulemaking (NPRM).

**SUMMARY:** The FAA is proposing a new noise standard for subsonic jet airplanes and subsonic transport category large airplanes. This noise standard would ensure that the latest available noise reduction technology is incorporated into new aircraft designs. This noise standard, Stage 4, would apply to any person submitting an application for a new airplane type design on and after January 1, 2006. The standard could be chosen voluntarily prior to that date. This noise standard is intended to provide uniform noise certification standards for Stage 4 airplanes certificated in the United States and those airplanes that meet the new International Civil Aviation Organization Annex 16 Chapter 4 noise standard.

**DATE:** Send your comments on or before March 1, 2004.

**ADDRESSES:** You may send comments [identified by Docket Number FAA–2003–16526] using any of the following methods:

- DOT Docket web site: Go to *http://dms.dot.gov* and follow the instructions for sending your comments electronically.
- Government-wide rulemaking web site: Go to *http://www.regulations.gov* and follow the instructions for sending your comments electronically.
- Mail: Docket Management Facility; U.S. Department of Transportation, 400 Seventh Street, SW., Nassif Building, Room PL–401, Washington, DC 20590–001.
- Fax: 1–202–493–2251.
- Hand Delivery: Room PL–401 on the plaza level of the Nassif Building, 400 Seventh Street, SW., Washington, DC, between 9 a.m. and 5 p.m., Monday through Friday, except Federal holidays.

For more information on the rulemaking process, *see* the **SUPPLEMENTARY INFORMATION** section of this document.

*Privacy:* We will post all comments we receive, without change, to *http://dms.dot.gov,* including any personal information you provide. For more information, see the Privacy Act discussion in the **SUPPLEMENTARY INFORMATION** section of this document.

*Docket:* To read background documents or comments received, go to *http://dms.dot.gov* at any time or to Room PL–401 on the plaza level of the Nassif Building, 400 Seventh Street, SW., Washington, DC, between 9 a.m. and 5 p.m., Monday through Friday, except Federal holidays.

**FOR FURTHER INFORMATION CONTACT:** Laurette Fisher, Office of Environment and Energy (AEE–100), Federal Aviation Administration, 800 Independence Avenue, SW., Washington, DC 20591; telephone (202) 267–3561; facsimile (202) 267–5594.

**SUPPLEMENTARY INFORMATION:**

### Comments Invited

The FAA invites interested persons to participate in this rulemaking by submitting written comments, data, or views. We also invite comments relating to the economic, environmental, energy, or federalism impacts that might result from adopting the proposals in this document. The most helpful comments reference a specific portion of the proposal, explain the reason for any recommended change, and include supporting data. We ask that you send us two copies of written comments.

We will file in the docket all comments we receive, as well as a report summarizing each substantive public contact with FAA personnel concerning this proposed rulemaking. The docket is available for public inspection before and after the comment closing date. If you wish to review the docket in person, go to the address in the **ADDRESSES** section of this preamble between 9 a.m. and 5 p.m., Monday through Friday, except Federal holidays. You may also review the docket using the Internet at the web address in the **ADDRESSES** section.

*Privacy Act:* Using the search function of our docket web site, anyone can find and read the comments received into any of our dockets, including the name of the individual sending the comment (or signing the comment on behalf of an association, business, labor union, etc.). You may review DOT's complete Privacy Act Statement in the **Federal Register** published on April 11, 2000 (65 FR 19477–78) or you may visit *http://dms.dot.gov.*

Before acting on this proposal, we will consider all comments we receive on or before the closing date for comments. We will consider comments filed late if it is possible to do so without incurring expense or delay. We may change this proposal in light of the comments we receive.

If you want the FAA to acknowledge receipt of your comments on this proposal, include with your comments a pre-addressed, stamped postcard on which the docket number appears. We will stamp the date on the postcard and mail it to you.

### Availability of Rulemaking Documents

You can get an electronic copy using the Internet by:

(1) Searching the Department of Transportation's electronic Docket Management System (DMS) web page (*http://dms.dot.gov/search*);

(2) Visiting the Office of Rulemaking's web page at *http://www.faa.gov/avr/arm/index.cfm;* or

(3) Accessing the Government Printing Office's web page at *http://www.access.gpo.gov/su_docs/aces/aces140.html.*

You can also get a copy by submitting a request to the Federal Aviation Administration, Office of Rulemaking, ARM–1, 800 Independence Avenue SW., Washington, DC 20591, or by calling (202) 267–9680. Make sure to identify the docket number, notice number, or amendment number of this rulemaking.

### Background

*Brief History of U.S. Noise Regulations*

In 1969, the FAA promulgated the first aircraft noise regulations in Title 14, Code of Federal Regulations (14 CFR) part 36, ''Noise Standards: Aircraft Type Certification.'' The new part 36 became effective on December 1, 1969, and set a limit on noise emissions of large aircraft of new design by establishing Stage 2 certification standards. In 1972, the Congress passed the Noise Control Act, which amended the Federal Aviation Act of 1958, giving the FAA authority to set limits for aircraft noise emissions. This authority was implemented by a 1973 amendment to part 36 that gave a noise stage designation to all newly produced airplanes.

In 1977, the FAA amended part 36 to provide for three stages of aircraft noise levels, each with specified limits. This regulation required applicants for new type certificates applied for on or after November 5, 1975, to comply with ''Stage 3'' noise limits, which were stricter than the noise limits then being applied. Airplanes in operation at the time that did not meet the Stage 3 noise limits were designated ''Stage 2'' airplanes.

In 1976, the FAA amended the aircraft operating rules of 14 CFR part 91 by

adding a new Subpart E entitled ''Operating Noise Limits.'' The regulation established a phased compliance program for U.S. domestic operators that required them to achieve compliance with Stage 2 or Stage 3 certification standards for all four-engine jet airplanes by January 1, 1985.

In 1980, Congress enacted the Aviation Safety and Noise Abatement Act of 1979 (ASNA). The ASNA required the FAA to promulgate regulations that extended the application of the January 1, 1985, cut-off date for four-engine jet Stage 1 airplanes to apply to both the U.S. and foreign operators. The FAA amended part 91 in 1980 to apply the 1985 operation deadline to all operators. Subpart E was recodified as Subpart I of part 91 in August 1989.

Recognizing the need to both expand airport capacity and provide relief from aviation noise, Congress passed the Airport Noise and Capacity Act of 1990 (ANCA) on November 5, 1990 (now codified at 49 U.S.C. 47521–47533). The regulations implementing the part of ANCA known as the Stage 3 transition rule were effective on September 25, 1991, and are codified at part 91, Subpart I, Operating Noise Limits. The regulations provided two options to meet the schedule for the transition to 100 percent Stage 3 operations in the contiguous United States by December 31, 1999. One option allowed an operator to meet the compliance schedule by phasing out Stage 2 airplanes. Under this option, an operator could operate no more than 75 percent of its Stage 2 base level after December 31, 1994, 50 percent after December 31, 1996, and 25 percent after December 31, 1998. The second option allowed an operator to meet the compliance schedule by attaining a fleet composition of not less than 55 percent Stage 3 airplanes after December 31, 1994, 65 percent after December 31, 1996, and 75 percent after December 31, 1998. New entrant operators (those that did not conduct operations on or before November 5, 1990) had to operate a fleet composed of at least 25 percent Stage 3 airplanes after December 31, 1994, 50 percent after December 31, 1996, and 75 percent after December 31, 1998. All operators were required to operate 100 percent Stage 3 fleets after December 31, 1999. In October 1991, Public Law 102–143 added a separate Stage 2 restriction for operations in Hawaii.

The FAA is now proposing to establish a new quieter noise standard to be known as Stage 4. This new noise standard would apply to any person filing an application for a new airplane type design on and after January 1, 2006. However, the adoption of a new noise standard for new aircraft designs is not intended to signal the start of any rulemaking or other proceeding aimed at phasing out the production or operation of current aircraft models. Currently, the FAA has no operational restrictions on Stage 3 airplanes, and the FAA has no plan to impose such restrictions.

Moreover, in the event that there is a decision at some future date to begin a transition from one noise standard to another, history has shown that phasing out the production of noisier airplanes, and eventually phasing out their operation, is a long process. As an example, the FAA established the Stage 3 noise standard in 1975, but it was not until the end of 1999 that the contiguous United States had an all Stage 3 fleet in operation. Stage 2 airplanes were last produced in 1988, but their operation was permitted for another 12 years. From the time the Stage 3 noise standard was adopted in 1975 until the contiguous United States had an all Stage 3 operational fleet, approximately 25 years had elapsed. As noted above, however, the FAA has no current plan to begin a phaseout of Stage 3 airplanes.

*Development of ICAO Chapter 4 Noise Standard*

Much of the background for the development of a Stage 4 noise standard has taken place in the international arena and the work of International Civil Aviation Organization (ICAO).

The environmental activities of the ICAO are largely undertaken through the Committee on Aviation Environmental Protection (CAEP), which was established by the ICAO in 1983, and which superseded the Committee on Aircraft Noise and the Committee on Aircraft Engine Emissions. The CAEP assists the ICAO in formulating new policies and adopting new standards on aircraft noise and aircraft engine emissions. The United States is an active member in the CAEP activities. There is at least one U.S. representative participating on each of the five working groups under CAEP.

In 1998, the CAEP Working Group for Noise (WG1) was tasked to develop options to further reduce airplane noise levels. The Working Group met several times over the two years to accomplish the task. Representatives of Working Group 2 for Airports and Operations, and the Forecast Economic Analysis Support Group, participated in the WG1 meetings to acquaint themselves with noise stringency options and to help WG1 define noise data requirements.

The working group considered several new, more stringent noise certification options for analysis. They include a ''traditional'' option with specified reductions at each noise certification measurement point (flyover, lateral, and approach), and three ''cumulative'' options that combine the three traditional measurement points allowing a total cumulative reduction without specifying reductions at any one measurement point. The three cumulative options were 8, 11, and 14 decibel reductions from Chapter 3/Stage 3 levels respectively.

In reaching a recommendation for a new ICAO noise standard for subsonic jet and large transport airplanes, the CAEP considered estimates of comprehensive costs and benefits associated with the various noise stringency and phaseout options. The technical working group charged by the CAEP to conduct the costs and benefits analysis made several key assumptions. These assumptions together with the issues arising from some of these are set out below:

*New Production Assumption.* It was assumed that airlines would require all new production aircraft to meet the new standard once it has been announced regardless of the application date. Within the ICAO working group, they used the term Non-Production for this assumption. The CAEP deliberations identified such possible commercial reasons as more stringent local noise restrictions, especially at some European airports, and the potential for future regional phaseout of noncompliant airplanes.

*Recertification.* The technical working group defines recertification as the certification of an in-service aircraft to comply with a more stringent noise certification standard. Recertification potentially includes options such as re-analysis of existing noise certification and performance databases, weight and/or flap limitations, and engine or airframe modifications. The cost or penalty incurred to recertify aircraft to the proposed new stringency levels is based on the relationships between noise reduction, the capital investment required, and operating costs. Under the recertification case analyzed by CAEP, noncompliant aircraft are either replaced or modified to comply with the new noise standard. An estimate was made of the cost to modify the airframe and/or engine to comply with the new noise standard. Aircraft affected by a phaseout scheme were screened to identify candidates eligible for recertification. These aircraft were assumed to be recertified (modified) to

remain in service until they reach their presumed retirement age.

*Price of Improved Technology.* Building upon the new-production assumption described above, increasing levels of noise certification stringency impose increasing development costs on manufacturers of airplanes and engines. As the level of stringency increases, more design compromises may be necessary to reduce certification noise levels at the expense of airplane weight, engine size and operating costs. New airplane types entering the fleet would be burdened by this cost in their development.

*Impact on Asset Values.* For the phaseout scenarios, the CAEP analysis assumed that the airlines operating in areas without phaseout requirements would benefit from availability of relatively lower-priced aircraft removed from the fleets of airlines operating in noise-restricted areas.

A CAEP Steering Group met in September 2000 to review the results of the analysis prepared by WG1 to further reduce airplane noise levels and to formulate specific recommendations on the new standard and on transition options that were to be forwarded to the full CAEP.

The FAA stresses that this economic information is presented as background material for how ICAO made its decision on the Chapter 4 standard. It does not affect the domestic regulatory impact of this proposed rule. That impact is analyzed later in this document.

In January 2001, the CAEP approved an approach to noise mitigation that includes the reduction of noise at its source (the aircraft), improved land use planning around airports, and a wider use of aircraft operating procedures and restrictions that abate noise. To reduce noise at its source, the CAEP adopted a standard that is ten decibels lower, on a cumulative margin basis, than the current standard of Chapter 3 in ICAO Annex 16. This adopted standard was derived from one of the WG1's recommendations. The United States participated with other countries in the CAEP effort to develop this quieter, more stringent aircraft noise standard.

On June 27, 2001, at its 163rd session, the ICAO unanimously approved the adoption of the new Chapter 4 noise standard in Annex 16. The new noise standard will apply to any application for new type designs submitted on or after January 1, 2006, for countries that use Annex 16 as its noise certification basis.

The text of Annex 16 describing the maximum noise levels for the new Chapter 4 noise limit is as follows:

- The maximum permitted noise levels are defined in Chapter 3 of Annex 16; and may not be exceeded at any of the measurement points; and
- The sum of the differences at all three measurement points between the maximum noise levels and the maximum permitted noise levels (the Stage 4 limit) specified in Chapter 3 of Annex 16 may not be less than 10 EPNdB; and
- The sum of the differences at any two measurement points between the maximum noise levels and the corresponding maximum permitted noise levels specified in Chapter 3 of Annex 16 may not be less than 2 EPNdB.

In accepting Chapter 4 standards, the FAA interprets the Chapter 4 requirements of Annex 16 as follows:

(1) None of an airplane's maximum noise levels (flyover, lateral, and approach) may be greater than the maximum permitted noise levels for Chapter 3 airplanes, as defined in Annex 16; and

(2) To determine Stage 4 compliance, an airplane's maximum flyover, lateral and approach noise levels are each subtracted from the maximum permitted noise levels. The differences obtained are the noise limit margins, to be used as follows:

(a) When the three margins are added together, the total must be 10 EPNdB or greater; and

(b) When any two of the margins are added together, the sum must be 2 EPNdB or greater.

*Overview of the Proposed Rule*

The FAA is proposing to amend parts 36 and 91 to add a new noise standard for Stage 4 subsonic jet airplanes and subsonic transport category large airplanes. The proposed amendment would include the following changes. The FAA would be adding ''Stage 4 noise level'', ''Stage 4 airplane'', and ''Chapter 4 noise level'' definitions to parts 36 and 91. In the acoustical change section of part 36, the requirements for Stage 4 airplanes would be added. Part 36 would also have a new section on Chapter 4 equivalency to Stage 4 that would require operators to have a Chapter 4 equivalency statement on board each Stage 4 airplane. Changes to Appendices A and B to part 36 would include an acceptable equivalent alternative for noise measurement and evaluation for Stage 4 airplanes. In part 91, the operating rules would be amended to allow the operation of Stage 4 airplanes where Stage 3 airplanes are now required. No operating limitations are being proposed.

**Section-by-Section Discussion of the Proposal**

The FAA is proposing to establish a new Stage 4 noise standard in part 36 for subsonic jet airplanes and subsonic transport category large airplanes. This new noise standard would ensure that the latest available noise reduction technology would be incorporated into new aircraft designs. The new Stage 4 noise standard has been written to mirror the ICAO Annex 16 Chapter 4 noise standard. The following is a section-by-section discussion of the proposed changes to part 36 and its appendices, and the associated operating rules in part 91.

*Stage 4 Noise Certification*

*Section 36.1*

The FAA is proposing to add the following three terms to § 36.1(f): ''Stage 4 noise level,'' ''Stage 4 airplane,'' and ''Chapter 4 noise level'', to be designated as paragraphs (f)(9), (f)(10), and (f)(11) respectively. These new terms, used in the proposed noise standard, would be added to the list of definitions currently listed in § 36.1(f) to include Stage 4 airplanes in the applicability section of part 36.

*Section 36.6*

The FAA is proposing to add new paragraphs (c) and (d) to § 36.6 to incorporate by reference ICAO Annex 16, Volume 1, Aircraft Noise, Third Edition, July 1993, Amendment 7. This change would add the ICAO document that includes requirements for noise measurement and evaluation and the maximum noise level to the list of acceptable alternatives.

*Section 36.7*

The FAA is proposing to amend § 36.7 to allow for the addition of the Stage 4 designation. Section 36.7(e) would be amended to include airplanes that were not originally certificated as Stage 4, but become Stage 4 after a change in type design. A new paragraph (f) to § 36.7 would describe the acoustical change approval process for airplanes originally certificated to Stage 4.

*Section 36.103*

The FAA is proposing to amend § 36.103(b) to establish the cutoff date for new Stage 3 certification, and add a new paragraph (c) to establish the date after which all new certification must be to Stage 4. Paragraph (c) would also designate the type certification requirements of part 36 necessary to comply with Stage 4.

*Section 36.105*

The FAA is proposing to add new § 36.105 entitled ''Chapter 4 equivalency''. The purpose of this section is to codify findings of equivalency for airplanes certificated under part 36 as Stage 4 and those certificated under ICAO Chapter 4. In addition, all airplanes certificated as Stage 4 would be required to have a specified equivalency statement included in the airplane flight manual (AFM). These two items are intended to facilitate the operation of Stage 4 airplanes in locations where Chapter 4 is the recognized standard by establishing equivalency of compliance at certification. The FAA intends these provisions to help eliminate the number of questions that have arisen with Stage 3 and Chapter 3 airplanes.

*Appendix A to Part 36*

This appendix prescribes the conditions under which airplane noise certification tests must be conducted and describes the measurement procedures that must be used in the measurement of airplane noise during certification testing. The FAA is proposing to add a new paragraph to Appendix A, section A36.1.4, that specifies an acceptable alternative for noise measurement and evaluation for Stage 4 airplanes. This alternative for Stage 4 noise measurement and evaluation is Appendix 2 to ICAO Annex 16, Environmental Protection, Volume I, Aircraft Noise, Third Edition, July 1993, Amendment 7 that was effective March 21, 2002.

In 2002, the FAA amended its noise certification standards for subsonic jet airplanes and subsonic transport category large airplanes (67 FR 45194, July 8, 2002). The changes were based on the joint effort of the FAA, the European Joint Aviation Authorities (JAA), and Aviation Rulemaking Advisory Committee to harmonize the U.S. noise certification regulations and the European Joint Aviation Requirements for subsonic jet airplanes and subsonic transport category large airplanes. These changes provided a nearly uniform noise certification standard for airplanes certified in the United States and in the JAA countries. There were two exceptions in conducting noise tests that remain unharmonized.

The FAA anticipates that when CAEP meets again in 2004, these two exceptions will have been resolved and will not affect this rulemaking. The exception for sound pressure level, part 36, Appendix A, section A36.9.3.2.1, has been resolved at the working group level as of October 2002. The exception for wind velocity, part 36, Appendix A, section A36.2.2.2(e), is currently being discussed in this working group. This proposed rule presumes that these two exceptions will no longer be at issue by the time the FAA publishes a final rule on Stage 4 certification.

*Appendix B to Part 36*

Part 36, appendix B, contains the maximum noise levels for transport category and jet airplanes, and the noise certification reference procedures and conditions. To comply with appendix B, an applicant must show that noise levels were measured and evaluated using the procedures of appendix A of this part, or an approved equivalent procedure. The FAA is proposing to amend section B36.1 to include an acceptable alternative for Stage 4 noise measurement and evaluation. The proposed alternative is Annex 16 Appendix 2. Section B36.5 would also be revised to include the maximum noise levels for Stage 4 airplanes.

*Stage 4 Operation*

*Section 91.851*

Section 91.851 contains definitions that apply to §§ 91.851 through 91.877, the Stage 3 operating rules for airplanes over 75,000 pounds. The FAA is proposing to add these new terms to § 91.851: ''Stage 4 noise level,'' ''Stage 4 airplane,'' and ''Chapter 4 noise level.'' The addition of these terms in the definition section coincides with their incorporation into the following operating rules.

*Section 91.853*

This section requires that after December 31, 1999, all airplanes over 75,000 pounds must be Stage 3. The FAA is proposing to add the phrase ''or Stage 4'' after the phrase ''Stage 3'' to include Stage 4 airplanes as acceptable to operate to or from any airport in the contiguous United States.

*Section 91.855*

This section prescribes the requirements for the operation of airplanes over 75,000 pounds in the contiguous United States on and since September 25, 1991. The FAA is proposing to add the phrase ''or Stage 4'' after the phrase ''Stage 3'' to include Stage 4 airplanes as acceptable to operate to or from any airport in the contiguous United States.

*Section 91.859*

This section allows an operator that is otherwise prohibited from operating to or from an airport in the contiguous United States, to apply for a special flight authorization for the purpose of obtaining modifications to meet Stage 3 noise levels. The FAA is proposing to add the phrase ''or Stage 4'' in the title and the text to include airplane modifications to meet Stage 4.

*Paperwork Reduction Act*

The Paperwork Reduction Act of 1995 (44 U.S.C. 3507(d)) requires that the FAA consider the impact of paperwork and other information collection burdens imposed on the Public. We have determined that there is no new information collection associated with this proposed rule.

**Economic Evaluation**

Proposed changes to Federal regulations must undergo several economic analyses. First, Executive Order 12866 directs each Federal agency proposing or adopting a regulation to proceed only upon a reasoned determination that the benefits of the intended regulation justify its costs. Second, the Regulatory Flexibility Act of 1980 requires agencies to analyze the economic impact of regulatory changes on small entities. Third, the Trade Agreements Act (19 U.S.C. 2531–2533) prohibits agencies from setting standards that create unnecessary obstacles to the foreign commerce of the United States. In developing U.S. standards, this Trade Act requires agencies to consider international standards and, where appropriate, that they be the basis of U.S. standards. Fourth, the Unfunded Mandates Reform Act of 1995 (Public Law 104–4) requires agencies to prepare a written assessment of the costs, benefits, and other effects of proposed or final rules that include a Federal mandate likely to result in the expenditure by State, local, or tribal governments, in the aggregate, or by the private sector, of $100 million or more annually (adjusted for inflation).

However, for regulations with an expected minimal impact, the above-specified analyses are not required. The Department of Transportation Order DOT 2100.5 prescribes policies and procedures for simplification, analysis, and review of regulations. If it is determined that the expected impact is so minimal that the proposal does not warrant a full evaluation, a statement to that effect and the basis for it is included in the proposed regulation.

This proposed rule would establish a new Stage 4 noise standard for subsonic jet airplanes and subsonic transport category large airplanes. The proposed noise standard would apply to new type designs for which application is made on or after January 1, 2006.

The proposed noise standard would provide noise certification standards for Stage 4 airplanes certificated in the United States that would be consistent with those for airplanes certificated under the International Civil Aviation Organization Annex 16 Chapter 4 noise standards, and would ensure that the best available, economically reasonable, and technologically practicable noise reduction technologies would be incorporated into the aircraft design.

The proposed rule was developed by assessing the feasibility and availability of the best noise abatement technologies for jet and propeller-driven large airplanes. The stringency alternatives were judged against the database of current and project airplanes that incorporate these technologies. The proposed rule is a representation of current industry practice and of projected technologies. All but four currently produced aircraft types meet the proposed Stage 4 standards. The FAA found that under current industry practice three of the four currently produced airplane types have configurations that do not meet the proposed Stage 4 noise standard. However, these airplanes have one or more configurations that meet Stage 4. The remaining airplane type for which no Stage 4 configuration exists, was type certified in 1981 and can still operate under this rule.

In 2006, when the proposed rule would become effective, all new type design subsonic jet airplanes and subsonic transport category large airplanes will be able to meet the Stage 4 noise standard by using the current available noise reduction technologies. Therefore, the proposed rule would have minimal, if any, cost. However, in order to meet the proposed Stage 4 standard, weight and engine constraints could be imposed on certain aircraft configurations. The FAA specifically requests comments from entities that could be negatively affected as a result of any weight and engine constraint and requests that all comments be accompanied by clear documentation.

*Initial Regulatory Flexibility Determination*

The Regulatory Flexibility Act of 1980 (RFA) establishes ''as a principle of regulatory issuance that agencies shall endeavor, consistent with the objective of the rule and of applicable statutes, to fit regulatory and informational requirements to the scale of the business, organizations, and governmental jurisdictions subject to regulation.'' To achieve that principle, the RFA requires agencies to solicit and consider flexible regulatory proposals and to explain the rationale for their actions. The Act covers a wide range of small entities, including small businesses, not-for-profit organizations and small governmental jurisdictions.

Agencies must perform a review to determine whether a proposed or final rule will have a significant economic impact on a substantial number of small entities. If the determination is that it will, the agency must prepare a regulatory flexibility analysis as described in the Act.

However, if an agency determines that a proposed or final rule is not expected to have a significant economic impact on a substantial number of small entities, section 605(b) of the 1980 RFA provides that the head of the agency may so certify and a regulatory flexibility analysis is not required. The certification must include a statement providing the factual basis for this determination, and the reasoning should be clear.

In view of the minimal cost impact of the proposed rule, the FAA has determined that this proposed rule would not have a significant economic impact on a substantial number of small entities. Accordingly, the FAA certifies that this proposal would not have a significant economic impact on a substantial number of small entities. The FAA invites industry comments on this determination and requests that all comments be accompanied with clear and detailed supporting data.

*International Trade Impact Analysis*

The Trade Agreement Act of 1979 prohibits Federal agencies from establishing any standards or engaging in related activities that create unnecessary obstacles to the foreign commerce of the United States. Legitimate domestic objectives, such as safety, are not considered unnecessary obstacles. The statute also requires consideration of international standards and, where appropriate, that they be the basis for U.S. standards. The FAA has assessed the potential effect of this proposed rule and determined that it would accept ICAO standards as the basis for United States regulation.

*Unfunded Mandates Reform Act*

The Unfunded Mandates Reform Act of 1995 (the Act) is intended, among other things, to curb the practice of imposing unfunded Federal mandates on State, local, and tribal governments. Title II of the Act requires each Federal agency to prepare a written statement assessing the effects of any Federal mandate in a proposed or final agency rule that may result in an expenditure of $100 million or more (adjusted annually for inflation) in any one year by State, local, and tribal governments, in the aggregate, or by the private sector; such a mandate is deemed to be a ''significant regulatory action.''

This proposed rule does not contain such a mandate. Therefore, the requirements of Title II of the Unfunded Mandates Reform Act of 1995 do not apply.

**Environmental Analysis**

In accordance with the provisions of regulations issued by the Council on Environmental Quality (40 CFR parts 1500–1508), FAA Order 1050.1D identifies certain FAA actions that may be categorically excluded from the preparation of an Environmental Assessment or an Environmental Impact Statement. Pursuant to FAA Order 1050.1D, appendix 4, paragraph 4(j), this rulemaking action qualifies for a categorical exclusion because no significant impacts to the environment are expected to result from its finalization or implementation and no extraordinary circumstances exist as prescribed under paragraph 32 of Order 1050.1D.

**Regulations That Significantly Affect Energy Supply, Distribution, or Use**

The FAA has analyzed this NPRM under Executive Order 13211, Actions Concerning Regulations that Significantly Affect Energy Supply, Distribution, or Use (May 18, 2001). We have determined that it is not a ''significant energy action'' under the executive order because it is not a ''significant regulatory action'' under Executive Order 12866, and it is not likely to have a significant adverse effect on the supply, distribution, or use of energy.

**List of Subjects in 14 CFR Parts 36 and 91**

Aircraft, Noise control, Reporting and recordkeeping requirements.

**The Proposed Amendments**

In consideration of the foregoing the FAA proposes to amend parts 36 and 91 of title 14 Code of Federal Regulations, as follows:

## PART 36—NOISE STANDARDS: AIRCRAFT TYPE AND AIRWORTHINESS CERTIFICATION

1. The authority citation for part 36 continues to read as follows:

**Authority:** 42 U.S.C. 4321 *et seq.*; 49 U.S.C. 106(g), 40113, 44701–44702, 44704, 44715; sec. 305, Pub. L. 96–193, 94 Stat. 50, 57; E.O. 11514, 35 FR 4247, 3 CFR, 1966–1970 Comp., p. 902.

2. Section 36.1 is amended by adding new paragraphs (f)(9), (f)(10), and (f)(11) to read as follows:

**§ 36.1 Applicability and definitions.**

* * * * *

(f) * * *

(9) A ''Stage 4 noise level'' means a noise level at or below the Stage 4 noise limit prescribed in section B36.5(d) of appendix B of this part.

(10) A ''Stage 4 airplane'' means an airplane that has been shown under this part not to exceed the Stage 4 noise limit prescribed in section B36.5(d) of appendix B of this part.

(11) A ''Chapter 4 noise level'' means a noise level at or below the Chapter 4 maximum noise level prescribed in Chapter 4 of the International Civil Aviation Organization (ICAO) Annex 16, Volume I, Amendment 7, dated March 21, 2002.

* * * * *

3. Section 36.6 is revised by adding paragraphs (c)(3) and (d)(3) to read as follows:

**§ 36.6 Incorporation by reference.**

* * * * *

(c) * * *

(3) International Standards and Recommended Practices entitled ''Environmental Protection, Annex 16 to the Convention on International Civil Aviation, Volume I, Aircraft Noise'', Third Edition, July 1993, Amendment 7, effective March 21, 2002.

(d) * * *

(3) *ICAO publications.* International Civil Aviation Organization (ICAO), Document Sales Unit, 999 University Street, Montreal, Quebec H3C 5H7, Canada.

* * * * *

4. Section 36.7 is revised by adding paragraphs (e)(4) and (f) to read as follows:

**§ 36.7 Acoustical change: Transport category large airplanes and jet airplanes.**

* * * * *

(e) * * *

(4) If an airplane is a Stage 3 airplane prior to a change in type design, and becomes a Stage 4 after the change in type design, the airplane must remain a Stage 4 airplane.

(f) *Stage 4 airplanes.* If an airplane is a Stage 4 airplane prior to a change in type design, the airplane must remain a Stage 4 airplane after the change in type design.

5. Section 36.103 is amended by revising paragraph (b) and adding a new paragraph (c) to read as follows:

**§ 36.103 Noise limits.**

* * * * *

(b) Type certification applications between November 5, 1975 and December 31, 2005. If application is made on or after November 5, 1975, and before January 1, 2006, it must be shown that the noise levels of the airplane are no greater than the Stage 3 noise limit prescribed in section B36.5(c) of appendix B of this part.

(c) Type certification applications on or after January 1, 2006. If application is made on or after January 1, 2006, it must be shown that the noise levels of the airplane are no greater than the Stage 4 noise limit prescribed in section B36.5(d) of appendix B of this part. Prior to January 1, 2006, an applicant may seek voluntary certification to Stage 4 maximum noise level; if Stage 4 certification is chosen, the Stage 4 noise limit on changes in type design will apply.

6. Add new § 36.105 to read as follows:

**§ 36.105 Chapter 4 equivalency.**

(a) When the noise measurement and evaluation procedures of the International Civil Aviation Organization (ICAO), as described in Annex 16, Volume I, Chapter 4 are used to establish a Chapter 4 noise certification, the airplane is considered equivalent to Stage 4.

(b) For each airplane for which Stage 4 certification is sought, the Airplane Flight Manual or operations manual must include the following statement: ''The following noise levels comply with part 36, Appendix B, Stage 4 maximum noise level requirements and were obtained by analysis of approved data from noise tests conducted under the provisions of part 36 Amendment [insert the appropriate part 36 amendment number]. The noise measurement and evaluation procedures used to obtain these noise levels have been found by the FAA to be equivalent to the Chapter 4 noise level required by the International Civil Aviation Organization (ICAO) in Annex 16, Volume I, Appendix 2, Amendment 7, effective March 21, 2002.''

## Appendix A [Amended]

7. Section A36.1 is revised by adding paragraph A36.1.4 to read as follows:

**Section A36.1 Introduction.**

* * * * *

A36.1.4 For Stage 4 airplanes, an acceptable alternative for noise measurement and evaluation is Appendix 2 to the International Civil Aviation Organization (ICAO) Annex 16, Environmental Protection, Volume I, Aircraft Noise, Third Edition, July 1993, Amendment 7, March 21, 2002. The Director of the Federal Register in accordance with 5 U.S.C. 552(a) and 1 CFR part 51 approved this incorporation by reference. This document can be obtained from the International Civil Aviation Organization (ICAO), Document Sales Unit, 999 University Street, Montreal, Quebec H3C 5H7, Canada. Also, you may obtain documents on the Internet at *www.ICAO.int/eshop/index.cfm.* Copies may be reviewed at the FAA Office of the Chief Counsel, Rules Docket, Federal Aviation Administration Headquarters Building, 800 Independence Avenue, SW., Washington, DC or at the Office of Federal Register, 800 North Capitol Street, NW., Suite 700, Washington, DC.

## Appendix B [Amended]

8. *Section B36.1 is revised to read as follows:*

**Section B36.1 Noise Measurement and Evaluation**

The procedures of appendix A of this part, or approved equivalent procedures, must be used to determine noise levels of an airplane. These noise levels must be used to show compliance with the requirements of this appendix. For Stage 4 airplanes, an acceptable alternative for noise measurement and evaluation is appendix 2 to the International Civil Aviation Organization (ICAO) Annex 16, Environmental Protection, Volume I, Aircraft Noise, Third Edition, July 1993, Amendment 7, March 21, 2002. The Director of the Federal Register in accordance with 5 U.S.C. 552(a) and 1 CFR part 51 approved this incorporation by reference. This document can be obtained from, and copies may be reviewed at the respective addresses listed in section A36.1.

9. Section B36.5 is revised to read as follows:

**Section B36.5 Maximum Noise Levels**

* * * * *

(d) For a Stage 4 airplane, the flyover, lateral, and approach maximum noise levels are prescribed in chapter 4 of the International Civil Aviation Organization (ICAO) Annex 16, Environmental Protection, Volume I, Aircraft Noise, Third Edition, July 1993, Amendment 7, effective March 21, 2002.

## PART 91—GENERAL OPERATING AND FLIGHT RULES

10. The authority citation for part 91 continues to read as follows:

**Authority:** 49 U.S.C. 106(g), 1155, 40103, 40113, 40120, 44101, 44111, 44701, 44709, 44711, 44712, 44715, 44716, 44717, 44722, 46306, 46315, 46316, 46504, 46506, 46507, 47122, 47508, 47528–47531, articles 12 and 29 of the Convention on International Civil Aviation (61 stat. 1180).

11. Section 91.851 is revised to read as follows:

**§ 91.851 Definitions.**

For the purposes of § 91.851 through 91.877 of this subpart:

*Chapter 4 noise level* means a noise level at or below the Chapter 4 maximum noise level prescribed in

Chapter 4 of the International Civil Aviation Organization (ICAO) Annex 16, Volume I, Amendment 7, dated March 21, 2002. Airplanes certificated to Chapter 4 are considered equivalent to Stage 4, and comply with all operating rules of this part.

*Contiguous United States* means the area encompassed by the 48 contiguous United States and the District of Columbia.

*Fleet* means those civil subsonic jet (turbojet) airplanes with a maximum certificated weight of more than 75,000 pounds that are listed on an operator's operations specifications as eligible for operation in the contiguous United States.

*Import* means a change in ownership of an airplane from a non-U.S. person to a U.S. person when the airplane is brought into the United States for operation.

*New entrant* means an air carrier or foreign air carrier that, on or before November 5, 1990, did not conduct operations under part 121 or 129 of this chapter using an airplane covered by this subpart to or from any airport in the contiguous United States, but that initiates such operation after that date.

*Operations specifications* means an enumeration of airplanes by type, model, series, and serial number operated by the operator or foreign air carrier on a given day, regardless of how or whether such airplanes are formally listed or designated by the operator.

*Owner* means any person that has indicia of ownership sufficient to register the airplane in the United States pursuant to part 47 of this chapter.

*Stage 2 airplane* means a civil subsonic jet (turbojet) airplane with a maximum certificated weight of 75,000 pounds or more that complies with Stage 2 noise levels as defined in part 36 of this chapter.

*Stage 2 noise levels* mean the requirements for Stage 2 noise levels as defined in part 36 of this chapter in effect on November 5, 1990.

*Stage 3 airplane* means a civil subsonic jet (turbojet) airplane with a maximum certificated weight of 75,000 pounds or more that complies with Stage 3 noise levels as defined in part 36 of this chapter.

*Stage 3 noise levels* mean the requirements for Stage 3 noise levels as defined in part 36 of this chapter in effect on November 5, 1990.

*Stage 4 airplane* means an airplane that has been shown not to exceed the Stage 4 noise limit prescribed in part 36 of this chapter. A Stage 4 airplane complies with all the operating rules of this part.

*Stage 4 noise level* means a noise level at or below the Stage 4 noise limit prescribed in part 36 of this chapter.

12. Section 91.853 is revised to read as follows:

**§ 91.853 Final compliance: Civil subsonic airplanes.**

Except as provided in § 91.873, after December 31, 1999, no person shall operate to or from any airport in the contiguous United States any airplane subject to § 91.801(c) of this subpart, unless that airplane has been shown to comply with Stage 3 or Stage 4 noise levels.

13. Section 91.855(a) is revised to read as follows:

**§ 91.855 Entry and nonaddition rule.**

* * * * *

(a) The airplane complies with Stage 3 or Stage 4 noise levels.

* * * * *

14. Section 91.859 is revised to read as follows:

**§ 91.859 Modification to meet Stage 3 or Stage 4 noise levels.**

For an airplane subject to § 91.801(c) of this subpart and otherwise prohibited from operation to or from an airport in the contiguous United States by § 91.855, any person may apply for a special flight authorization for that airplane to operate in the contiguous United States for the purpose of obtaining modifications to meet Stage 3 or Stage 4 noise levels.

Issued in Washington, DC, on November 17, 2003.

**Paul R. Dykeman,**

*Deputy Director, Office of Environment and Energy.*

[FR Doc. 03–29147 Filed 11–25–03; 12:37 pm]

BILLING CODE 4910–13–P

Federal Register

Monday,
December 1, 2003

# Part V

# Department of the Treasury

## Customs Service

**19 CFR Parts 10 and 163**

**Implementation of the Andean Trade Promotion and Drug Eradication Act; Interim Rule; Federal Register Correction and CFR Correction**

## DEPARTMENT OF THE TREASURY

## Customs Service

## 19 CFR Parts 10 and 163

**[T.D. 03–16]**

**1515–AD19**

## Implementation of the Andean Trade Promotion and Drug Eradication Act

*Correction*

In rule document 03–6867 beginning on page 14477 in the issue of Tuesday, March 25, 2003, make the following corrections:

■ 1. On page 14477, the Cover page is in error and should read ''Implementation of the Andean Trade Promotion and Drug Eradication Act; Interim Rule''.

■ 2. On pages 14478 through 14500 in the running head, ''Proposed Rules'' should read ''Rules and Regulations''.

[FR Doc. C3–06867 Filed 11–28–03; 8:45 am]

**BILLING CODE 1505–01–D**

---

## DEPARTMENT OF THE TREASURY

## Customs Service

## 19 CFR Parts 10 and 163

## Implementation of the Andean Trade Promotion and Drug Eradication Act

*CFR Correction*

Title 19 of the Code of Federal Regulations, Parts 1 to 140 and Parts 141 to 199, revised as of April 1, 2003, is corrected by incorporating the following amendments, originally published at 68 FR 14486–14500, Mar. 25, 2003. See also the **Federal Register** correction appearing in this part V.

## PART 10—ARTICLES CONDITIONALLY FREE, SUBJECT TO A REDUCED RATE, ETC.

■ 1. In Parts 1 to 140, on page 82, the specific authority citation for §§ 10.201 through 10.207 is revised to read, and a new specific authority citation for §§ 10.241 through 10.248 and §§ 10.251 through 10.257 is added to read, as follows:

* * * * *

Sections 10.201 through 10.207 also issued under 19 U.S.C. 3203;

* * * * *

Sections 10.241 through 10.248 and §§ 10.251 through 10.257 also issued under 19 U.S.C. 3203.

■ 2. On page 172, § 10.201 is revised to read as follows:

### § 10.201 Applicability.

Title II of Pub. L. 102–182 (105 Stat. 1233), entitled the Andean Trade Preference Act (ATPA) and codified at 19 U.S.C. 3201 through 3206, authorizes the President to proclaim duty-free treatment for all eligible articles from any beneficiary country and to designate countries as beneficiary countries. The provisions of §§ 10.202 through 10.207 set forth the legal requirements and procedures that apply for purposes of obtaining that duty-free treatment for certain articles from a beneficiary country which are identified for purposes of that treatment in General Note 11, Harmonized Tariff Schedule of the United States (HTSUS), and in the ''Special'' rate of duty column of the HTSUS. Provisions regarding preferential treatment of apparel and other textile articles under the ATPA are contained in §§ 10.241 through 10.248, and provisions regarding preferential treatment of tuna and certain other non-textile articles under the ATPA are contained in §§ 10.251 through 10.257.

■ 3. On pages 172 and 173, in § 10.202, the introductory text is amended by removing the reference ''10.208'' and adding, in its place, the reference ''10.207'', and paragraph (b) is amended by removing paragraphs (b)(1) through (b)(8) and adding, in their place, new paragraphs (b)(1) through (b)(4) to read as follows:

### § 10.202 Definitions.

* * * * *

(b) * * *

(1) Textiles and apparel articles which were not eligible articles for purposes of the ATPA on January 1, 1994, as the ATPA was in effect on that date, except as otherwise provided in §§ 10.241 through 10.248;

(2) Rum and tafia classified in subheading 2208.40, Harmonized Tariff Schedule of the United States;

(3) Sugars, syrups, and sugar-containing products subject to over-quota duty rates under applicable tariff-rate quotas; or

(4) Tuna prepared or preserved in any manner in airtight containers, except as otherwise provided in §§ 10.251 through 10.257.

* * * * *

■ 4. On page 81, § 10.208 is removed from the table of contents for part 10, and on page 177, § 10.208 is removed.

■ 5a. On page 81, a new center heading, followed by new §§ 10.241 through 10.248, is added to the table of contents for part 10 to read as follows:

**Apparel and Other Textile Articles Under the Andean Trade Promotion and Drug Eradication Act**

Sec.
10.241 Applicability.
10.242 Definitions.
10.243 Articles eligible for preferential treatment.
10.244 Certificate of Origin.
10.245 Filing of claim for preferential treatment.
10.246 Maintenance of records and submission of Certificate by importer.
10.247 Verification and justification of claim for preferential treatment.
10.248 Additional requirements for preferential treatment of brassieres.

■ 5b. On page 207, a new center heading, followed by new §§ 10.241 through 10.248, is added to read as follows:

## Apparel and Other Textile Articles Under the Andean Trade Promotion and Drug Eradication Act

### § 10.241 Applicability.

Title XXXI of Public Law 107–210 (116 Stat. 933), entitled the Andean Trade Promotion and Drug Eradication Act (ATPDEA), amended sections 202, 203, 204, and 208 of the Andean Trade Preference Act (the ATPA, 19 U.S.C. 3201–3206) to authorize the President to extend additional trade benefits to countries that are designated as beneficiary countries under the ATPA. Section 204(b)(3) of the ATPA (19 U.S.C. 3203(b)(3)) provides for the preferential treatment of certain apparel and other textile articles from those ATPA beneficiary countries which the President designates as ATPDEA beneficiary countries. The provisions of §§ 10.241 through 10.248 of this part set forth the legal requirements and procedures that apply for purposes of obtaining preferential treatment pursuant to ATPA section 204(b)(3) and Subchapter XXI, Chapter 98, HTSUS.

### § 10.242 Definitions.

When used in §§ 10.241 through 10.248, the following terms have the meanings indicated:

*Apparel articles.* ''Apparel articles'' means goods classifiable in Chapters 61 and 62 and headings 6501, 6502, 6503, and 6504 and subheadings 6406.99.15 and 6505.90 of the HTSUS.

*Assembled or sewn or otherwise assembled in one or more ATPDEA beneficiary countries.* ''Assembled'' and ''sewn or otherwise assembled'' when used in the context of production of an apparel or other textile article in one or more ATPDEA beneficiary countries has reference to a joining together of two or more components that occurred in one or more ATPDEA beneficiary countries, whether or not a prior joining operation

was performed on the article or any of its components in the United States.

*ATPA.* ''ATPA'' means the Andean Trade Preference Act, 19 U.S.C. 3201–3206.

*ATPDEA beneficiary country.* ''ATPDEA beneficiary country'' means a ''beneficiary country'' as defined in § 10.202(a) for purposes of the ATPA which the President also has designated as a beneficiary country for purposes of preferential treatment of apparel and other textile articles under 19 U.S.C. 3203(b)(3) and which has been the subject of a determination by the President or his designee, published in the **Federal Register**, that the beneficiary country has satisfied the requirements of 19 U.S.C. 3203(b)(5)(A)(ii).

*Chief value.* ''Chief value'' when used with reference to llama, alpaca, and vicuña means that the value of those materials exceeds the value of any other single textile material in the fabric or component under consideration, with the value in each case determined by application of the principles set forth in § 10.243(c)(1)(ii).

*Cut in one or more ATPDEA beneficiary countries.* ''Cut'' when used in the context of production of textile luggage in one or more ATPDEA beneficiary countries means that all fabric components used in the assembly of the article were cut from fabric in one or more ATPDEA beneficiary countries, or were cut from fabric in the United States and used in a partial assembly operation in the United States prior to cutting of fabric and assembly of the article in one or more ATPDEA beneficiary countries, or both.

*Foreign.* ''Foreign'' means of a country other than the United States or an ATPDEA beneficiary country.

*HTSUS.* ''HTSUS'' means the Harmonized Tariff Schedule of the United States.

*Knit-to-shape components.* ''Knit-to-shape,'' when used with reference to textile components, means components that are knitted or crocheted from a yarn directly to a specific shape containing a self-start edge. Minor cutting or trimming will not affect the determination of whether a component is ''knit-to-shape.''

*Luggage.* ''Luggage'' means travel goods (such as trunks, hand trunks, lockers, valises, satchels, suitcases, wardrobe cases, overnight bags, pullman bags, gladstone bags, traveling bags, knapsacks, kitbags, haversacks, duffle bags, and like articles designed to contain clothing or other personal effects during travel) and brief cases, portfolios, school bags, photographic equipment bags, golf bags, camera cases, binocular cases, gun cases, occupational luggage cases (for example, physicians' cases, sample cases), and like containers and cases designed to be carried with the person. The term ''luggage'' does not include handbags (that is, pocketbooks, purses, shoulder bags, clutch bags, and all similar articles, by whatever name known, customarily carried by women or girls). The term ''luggage'' also does not include flat goods (that is, small flatware designed to be carried on the person, such as banknote cases, bill cases, billfolds, bill purses, bill rolls, card cases, change cases, cigarette cases, coin purses, coin holders, compacts, currency cases, key cases, letter cases, license cases, money cases, pass cases, passport cases, powder cases, spectacle cases, stamp cases, vanity cases, tobacco pouches, and similar articles).

*NAFTA.* ''NAFTA'' means the North American Free Trade Agreement entered into by the United States, Canada, and Mexico on December 17, 1992.

*Preferential treatment.* ''Preferential treatment'' means entry, or withdrawal from warehouse for consumption, in the customs territory of the United States free of duty and free of any quantitative restrictions, limitations, or consultation levels as provided in 19 U.S.C. 3203(b)(3).

*Wholly formed fabric components.* ''Wholly formed,'' when used with reference to fabric components, means that all of the production processes, starting with the production of wholly formed fabric and ending with a component that is ready for incorporation into an apparel article, took place in a single country.

*Wholly formed fabrics.* ''Wholly formed,'' when used with reference to fabric(s), means that all of the production processes, starting with polymers, fibers, filaments, textile strips, yarns, twine, cordage, rope, or strips of fabric and ending with a fabric by a weaving, knitting, needling, tufting, felting, entangling or other process, took place in a single country.

*Wholly formed yarns.* ''Wholly formed,'' when used with reference to yarns, means that all of the production processes, starting with the extrusion of filament, strip, film, or sheet and including drawing to fully orient a filament or slitting a film or sheet into strip, or the spinning of all fibers into yarn, or both, and ending with a yarn or plied yarn, took place in the United States or in one or more ATPDEA beneficiary countries.

**§ 10.243 Articles eligible for preferential treatment.**

(a) *General.* Subject to paragraphs (b) and (c) of this section, preferential treatment applies to the following apparel and other textile articles that are imported directly into the customs territory of the United States from an ATPDEA beneficiary country:

(1) Apparel articles sewn or otherwise assembled in one or more ATPDEA beneficiary countries, or in the United States, or in both, exclusively from any one of the following:

(i) Fabrics or fabric components wholly formed, or components knit-to-shape, in the United States, from yarns wholly formed in the United States or in one or more ATPDEA beneficiary countries (including fabrics not formed from yarns, if those fabrics are classifiable under heading 5602 or 5603 of the HTSUS and are formed in the United States), provided that, if the apparel article is assembled from knitted or crocheted or woven wholly formed fabrics or from knitted or crocheted or woven wholly formed fabric components produced from fabric, all dyeing, printing, and finishing of that knitted or crocheted or woven fabric or component was carried out in the United States;

(ii) Fabrics or fabric components formed, or components knit-to-shape, in one or more ATPDEA beneficiary countries from yarns wholly formed in one or more ATPDEA beneficiary countries, if those fabrics (including fabrics not formed from yarns, if those fabrics are classifiable under heading 5602 or 5603 of the HTSUS and are formed in one or more ATPDEA beneficiary countries) or components are in chief value of llama, alpaca, and/or vicuña;

(iii) Fabrics or yarns, provided that apparel articles (except articles classifiable under subheading 6212.10 of the HTSUS) of those fabrics or yarns would be considered an originating good under General Note 12(t), HTSUS, if the apparel articles had been imported directly from Canada or Mexico; or

(iv) Fabrics or yarns that the President or his designee has designated in the **Federal Register** as fabrics or yarns that cannot be supplied by the domestic industry in commercial quantities in a timely manner;

(2) Apparel articles sewn or otherwise assembled in one or more ATPDEA beneficiary countries, or in the United States, or in both, exclusively from a combination of fabrics, fabric components, knit-to-shape components or yarns described in two or more of paragraphs (a)(1)(i) through (a)(1)(iv) of this section;

(3) A handloomed, handmade, or folklore apparel or other textile article of an ATPDEA beneficiary country that the President or his designee and representatives of the ATPDEA beneficiary country mutually agree is a handloomed, handmade, or folklore article and that is certified as a handloomed, handmade, or folklore article by the competent authority of the ATPDEA beneficiary country;

(4) Brassieres classifiable under subheading 6212.10 of the HTSUS, if both cut and sewn or otherwise assembled in the United States, or in one or more ATPDEA beneficiary countries, or in both, other than articles entered as articles described in paragraphs (a)(1) through (a)(3) and (a)(7) of this section, and provided that any applicable additional requirements set forth in § 10.248 are met;

(5) Textile luggage assembled in an ATPDEA beneficiary country from fabric wholly formed and cut in the United States, from yarns wholly formed in the United States, that is entered under subheading 9802.00.80 of the HTSUS;

(6) Textile luggage assembled in one or more ATPDEA beneficiary countries from fabric cut in one or more ATPDEA beneficiary countries from fabric wholly formed in the United States from yarns wholly formed in the United States; and

(7) Apparel articles sewn or otherwise assembled in one or more ATPDEA beneficiary countries from fabrics or from fabric components formed, or from components knit-to-shape, in one or more ATPDEA beneficiary countries from yarns wholly formed in the United States or in one or more ATPDEA beneficiary countries (including fabrics not formed from yarns, if those fabrics are classifiable under heading 5602 or 5603 of the HTSUS and are formed in one or more ATPDEA beneficiary countries), including apparel articles sewn or otherwise assembled in part but not exclusively from any of the fabrics, fabric components formed, or components knit-to-shape described in paragraph (a)(1) of this section.

(b) *Dyeing, printing, finishing and other operations*—(1) *Dyeing, printing and finishing operations.* Dyeing, printing, and finishing operations may be performed on any yarn, fabric, or knit-to-shape or other component used in the production of any article described under paragraph (a) of this section without affecting the eligibility of the article for preferential treatment, provided that the operation is performed in the United States or in an ATPDEA beneficiary country and not in any other country and subject to the following additional conditions:

(i) In the case of an article described in paragraph (a)(1), (a)(2), or (a)(7) of this section that contains a knitted or crocheted or woven fabric, or a knitted or crocheted or woven fabric component produced from fabric, that was wholly formed in the United States from yarns wholly formed in the United States, any dyeing, printing, or finishing of that knitted or crocheted or woven fabric or component must have been carried out in the United States; and

(ii) In the case of assembled luggage described in paragraph (a)(5) of this section, an operation may be performed in an ATPDEA beneficiary country only if that operation is incidental to the assembly process within the meaning of § 10.16.

(2) *Other operations.* An article described under paragraph (a) of this section that is otherwise eligible for preferential treatment will not be disqualified from receiving that treatment by virtue of having undergone one or more operations such as embroidering, stone-washing, enzyme-washing, acid washing, perma-pressing, oven-baking, bleaching, garment-dyeing or screen printing, provided that the operation is performed in the United States or in an ATPDEA beneficiary country and not in any other country. However, in the case of assembled luggage described in paragraph (a)(5) of this section, an operation may be performed in an ATPDEA beneficiary country without affecting the eligibility of the article for preferential treatment only if it is incidental to the assembly process within the meaning of § 10.16.

(c) *Special rules for certain component materials*—(1) *Foreign findings, trimmings, interlinings, and yarns*—(i) *General.* An article otherwise described under paragraph (a) of this section will not be ineligible for the preferential treatment referred to in § 10.241 because the article contains:

(A) Findings and trimmings of foreign origin, if the value of those findings and trimmings does not exceed 25 percent of the cost of the components of the assembled article. For purposes of this section ''findings and trimmings'' include, but are not limited to, sewing thread, hooks and eyes, snaps, buttons, ''bow buds,'' decorative lace trim, elastic strips, zippers (including zipper tapes), and labels;

(B) Interlinings of foreign origin, if the value of those interlinings does not exceed 25 percent of the cost of the components of the assembled article. For purposes of this section ''interlinings'' include only a chest type plate, a ''hymo'' piece, or ''sleeve header,'' of woven or weft-inserted warp knit construction and of coarse animal hair or man-made filaments;

(C) Any combination of findings and trimmings of foreign origin and interlinings of foreign origin, if the total value of those findings and trimmings and interlinings does not exceed 25 percent of the cost of the components of the assembled article; or

(D) Yarns not wholly formed in the United States or in one or more ATPDEA beneficiary countries if the total weight of all those yarns is not more than 7 percent of the total weight of the article.

(ii) *''Cost'' and ''value'' defined.* The ''cost'' of components and the ''value'' of findings and trimmings or interlinings referred to in paragraph (c)(1)(i) of this section means:

(A) The price of the components, findings and trimmings, or interlinings when last purchased, f.o.b. port of exportation, as set out in the invoice or other commercial documents, or, if the price is other than f.o.b. port of exportation:

(*1*) The price as set out in the invoice or other commercial documents adjusted to arrive at an f.o.b. port of exportation price; or

(*2*) If no exportation to an ATPDEA beneficiary country is involved, the price as set out in the invoice or other commercial documents, less the freight, insurance, packing, and other costs incurred in transporting the components, findings and trimmings, or interlinings to the place of production if included in that price; or

(B) If the price cannot be determined under paragraph (c)(1)(ii)(A) of this section or if Customs finds that price to be unreasonable, all reasonable expenses incurred in the growth, production, manufacture, or other processing of the components, findings and trimmings, or interlinings, including the cost or value of materials and general expenses, plus a reasonable amount for profit, and the freight, insurance, packing, and other costs, if any, incurred in transporting the components, findings and trimmings, or interlinings to the port of exportation.

(iii) *Treatment of yarns as findings or trimmings.* If any yarns not wholly formed in the United States or one or more ATPDEA beneficiary countries are used in an article as a finding or trimming described in paragraph (c)(1)(i)(A) of this section, the yarns will be considered to be a finding or trimming for purposes of paragraph (c)(1)(i) of this section.

(2) *Special rule for nylon filament yarn.* An article otherwise described under paragraph (a)(1)(i) through (iii), (a)(2), or (a)(7) of this section will not be

ineligible for the preferential treatment referred to in § 10.241 because the article contains nylon filament yarn (other than elastomeric yarn) that is classifiable in subheading 5402.10.30, 5402.10.60, 5402.31.30, 5402.31.60, 5402.32.30, 5402.32.60, 5402.41.10, 5402.41.90, 5402.51.00, or 5402.61.00 of the HTSUS and that is entered free of duty from Canada, Mexico, or Israel.

(d) *Imported directly defined.* For purposes of paragraph (a) of this section, the words ''imported directly'' mean:

(1) Direct shipment from any ATPDEA beneficiary country to the United States without passing through the territory of any country that is not an ATPDEA beneficiary country;

(2) If the shipment is from any ATPDEA beneficiary country to the United States through the territory of any country that is not an ATPDEA beneficiary country, the articles in the shipment do not enter into the commerce of any country that is not an ATPDEA beneficiary country while en route to the United States and the invoices, bills of lading, and other shipping documents show the United States as the final destination; or

(3) If the shipment is from any ATPDEA beneficiary country to the United States through the territory of any country that is not an ATPDEA beneficiary country, and the invoices and other documents do not show the United States as the final destination, the articles in the shipment upon arrival in the United States are imported directly only if they:

(i) Remained under the control of the customs authority of the intermediate country;

(ii) Did not enter into the commerce of the intermediate country except for the purpose of sale other than at retail, and the port director is satisfied that the importation results from the original commercial transaction between the importer and the producer or the producer's sales agent; and

(iii) Were not subjected to operations other than loading or unloading, and other activities necessary to preserve the articles in good condition.

**§ 10.244 Certificate of Origin.**

(a) *General.* A Certificate of Origin must be employed to certify that an apparel or other textile article being exported from an ATPDEA beneficiary country to the United States qualifies for the preferential treatment referred to in § 10.241. The Certificate of Origin must be prepared by the exporter in the ATPDEA beneficiary country in the format specified in paragraph (b) of this section. Where the ATPDEA beneficiary country exporter is not the producer of the article, that exporter may complete and sign a Certificate of Origin on the basis of:

(1) Its reasonable reliance on the producer's written representation that the article qualifies for preferential treatment; or

(2) A completed and signed Certificate of Origin for the article voluntarily provided to the exporter by the producer.

(b) *Form of Certificate.* The Certificate of Origin referred to in paragraph (a) of this section must be in the following format:

BILLING CODE 1505–01–D

# Andean Trade Promotion and Drug Eradication Act
# Textile Certificate of Origin

| | |
|---|---|
| 1. Exporter Name & Address: | 3. Importer Name & Address: |
| 2. Producer Name & Address: | |
| 4. Description of Article: | |
| 5. Preference Group: | |

| Group | *Each description below is only a summary of the cited CFR provision.* | 19 CFR |
|---|---|---|
| A. | Apparel assembled from U.S. formed, dyed, printed and finished fabrics or fabric components, or U.S. formed knit-to-shape components from U.S. or Andean yarns. | 10.243(a)(1)(i) |
| B. | Apparel assembled from Andean chief value llama, alpaca or vicuña fabrics, fabric components, or knit-to-shape components, from Andean yarns. | 10.243(a)(1)(ii) |
| C. | Apparel assembled from fabrics or yarns considered as being in short supply in the NAFTA. | 10.243(a)(1)(iii) |
| D. | Apparel assembled from fabrics or yarns designated as not available in commercial quantities in the United States. | 10.243(a)(1)(iv) |
| E. | Apparel assembled from a combination of two or more yarns, fabrics, fabric components, or knit-to-shape components described in preference groups A though D. | 10.243(a)(2) |
| F. | Handloomed, handmade, or folklore textile and apparel goods. | 10.243(a)(3) |
| G. | Brassieres assembled in the U.S. and/or one or more Andean beneficiary countries. | 10.243(a)(4) |
| H. | Textile luggage assembled from U.S. formed fabrics from U.S. yarns. | 10.243(a)(5)&(6) |
| I. | Apparel assembled from Andean formed fabrics, fabric components, or knit-to-shape components from U.S. or Andean yarns, whether or not also assembled, in part, from yarns, fabrics and fabric components described in preference groups A through D. | 10.243(a)(7) |

| | |
|---|---|
| 6. U.S./Andean Fabric Producer Name & Address: | 7. U.S./Andean Yarn Producer Name & Address: |
| 8. Handloomed, Handmade, or Folklore Article: | 9. Name of Short Supply Fabric or Yarn: |

I certify that the information on this document is complete and accurate and I assume the responsibility for proving such representations. I understand that I am liable for any false statements or material omissions made on or in connection with this document. I agree to maintain, and present upon request, documentation necessary to support this certificate.

| | | |
|---|---|---|
| 10. Authorized Signature: | | 11. Company: |
| 12. Name: (Print or Type) | | 13. Title: |
| 14. Date: (DD/MM/YY) | 15. Blanket Period<br>From: To: | 16: Telephone:<br>Facsimile: |

BILLING CODE 1505–01–C

(c) *Preparation of Certificate.* The following rules will apply for purposes of completing the Certificate of Origin set forth in paragraph (b) of this section:

(1) Blocks 1 through 5 pertain only to the final article exported to the United States for which preferential treatment may be claimed;

(2) Block 1 should state the legal name and address (including country) of the exporter;

(3) Block 2 should state the legal name and address (including country) of the producer. If there is more than one producer, attach a list stating the legal name and address (including country) of all additional producers. If this information is confidential, it is acceptable to state ''available to Customs upon request'' in block 2. If the producer and the exporter are the same, state ''same'' in block 2;

(4) Block 3 should state the legal name and address (including country) of the importer;

(5) Block 4 should provide a full description of each article. The description should be sufficient to relate it to the invoice description and to the description of the article in the international Harmonized System. Include the invoice number as shown on the commercial invoice or, if the invoice number is not known, include another unique reference number such as the shipping order number;

(6) In block 5, insert the letter that designates the preference group which applies to the article according to the description contained in the CFR provision cited on the Certificate for that group;

(7) Blocks 6 through 9 must be completed only when the block in question calls for information that is relevant to the preference group identified in block 5;

(8) Block 6 should state the legal name and address (including country) of the fabric producer;

(9) Block 7 should state the legal name and address (including country) of the yarn producer;

(10) Block 8 should state the name of the folklore article or should state that the article is handloomed or handmade of handloomed fabric;

(11) Block 9 should be completed if the article described in block 4 incorporates a fabric or yarn described in preference group C or D and should state the name of the fabric or yarn that has been considered as being in short supply in the NAFTA or that has been designated as not available in commercial quantities in the United States. Block 9 also should be completed if preference group E or I applies to the article described in block 4 and the article incorporates a fabric or yarn described in preference group C or D;

(12) Block 10 must contain the signature of the exporter or of the exporter's authorized agent having knowledge of the relevant facts;

(13) Block 14 should reflect the date on which the Certificate was completed and signed;

(14) Block 15 should be completed if the Certificate is intended to cover multiple shipments of identical articles as described in block 4 that are imported into the United States during a specified period of up to one year (see § 10.246(b)(4)(ii)). The ''from'' date is the date on which the Certificate became applicable to the article covered by the blanket Certificate (this date may be prior to the date reflected in block 14). The ''to'' date is the date on which the blanket period expires; and

(15) The Certificate may be printed and reproduced locally. If more space is needed to complete the Certificate, attach a continuation sheet.

**§ 10.245 Filing of claim for preferential treatment.**

(a) *Declaration.* In connection with a claim for preferential treatment for an apparel or other textile article described in § 10.243, the importer must make a written declaration that the article qualifies for that treatment. The inclusion on the entry summary, or equivalent documentation, of the subheading within Chapter 98 of the HTSUS under which the article is classified will constitute the written declaration. Except in any of the circumstances described in § 10.246(d)(1), the declaration required under this paragraph must be based on a Certificate of Origin that has been completed and properly executed in accordance with § 10.244, that covers the article being imported, and that is in the possession of the importer.

(b) *Corrected declaration.* If, after making the declaration required under paragraph (a) of this section, the importer has reason to believe that a Certificate of Origin on which a declaration was based contains information that is not correct, the importer must within 30 calendar days after the date of discovery of the error make a corrected declaration and pay any duties that may be due. A corrected declaration will be effected by submission of a letter or other written statement to the Customs port where the declaration was originally filed.

**§ 10.246 Maintenance of records and submission of Certificate by importer.**

(a) *Maintenance of records.* Each importer claiming preferential treatment for an article under § 10.245 must maintain in the United States, in accordance with the provisions of part 163 of this chapter, all records relating to the importation of the article. Those records must include a copy of the Certificate of Origin referred to in § 10.245(a) and any other relevant documents or other records as specified in § 163.1(a) of this chapter.

(b) *Submission of Certificate.* An importer who claims preferential treatment on an apparel or other textile article under § 10.245(a) must provide, at the request of the port director, a copy of the Certificate of Origin pertaining to the article. A Certificate of Origin submitted to Customs under this paragraph:

(1) Must be in writing or must be transmitted electronically through any electronic data interchange system authorized by Customs for that purpose;

(2) If in writing, must be signed by the exporter or by the exporter's authorized agent having knowledge of the relevant facts;

(3) Must be completed either in the English language or in the language of the country from which the article is exported. If the Certificate is completed in a language other than English, the importer must provide to Customs upon request a written English translation of the Certificate; and

(4) May be applicable to:

(i) A single importation of an article into the United States, including a single shipment that results in the filing of one or more entries and a series of shipments that results in the filing of one entry; or

(ii) Multiple importations of identical articles into the United States that occur within a specified blanket period, not to exceed 12 months, set out in the Certificate by the exporter. For purposes of this paragraph and § 10.244(c)(14), ''identical articles'' means articles that are the same in all material respects, including physical characteristics, quality, and reputation.

(c) *Correction and nonacceptance of Certificate.* If the port director determines that a Certificate of Origin is illegible or defective or has not been completed in accordance with paragraph (b) of this section, the importer will be given a period of not less than five working days to submit a corrected Certificate. A Certificate will not be accepted in connection with subsequent importations during a period referred to in paragraph (b)(4)(ii) of this section if the port director

determined that a previously imported identical article covered by the Certificate did not qualify for preferential treatment.

(d) *Certificate not required*—(1) *General.* Except as otherwise provided in paragraph (d)(2) of this section, an importer is not required to have a Certificate of Origin in his possession for:

(i) An importation of an article for which the port director has in writing waived the requirement for a Certificate of Origin because the port director is otherwise satisfied that the article qualifies for preferential treatment;

(ii) A non-commercial importation of an article; or

(iii) A commercial importation of an article whose value does not exceed US$2,500, provided that, unless waived by the port director, the producer, exporter, importer or authorized agent includes on, or attaches to, the invoice or other document accompanying the shipment the following signed statement:

I hereby certify that the article covered by this shipment qualifies for preferential treatment under the ATPDEA.

Check One:

( ) Producer
( ) Exporter
( ) Importer
( ) Agent

_____
Name

_____
Title

_____
Address

_____
Signature and Date

(2) *Exception.* If the port director determines that an importation described in paragraph (d)(1) of this section forms part of a series of importations that may reasonably be considered to have been undertaken or arranged for the purpose of avoiding a Certificate of Origin requirement under §§ 10.244 through 10.246, the port director will notify the importer in writing that for that importation the importer must have in his possession a valid Certificate of Origin to support the claim for preferential treatment. The importer will have 30 calendar days from the date of the written notice to obtain a valid Certificate of Origin, and a failure to timely obtain the Certificate of Origin will result in denial of the claim for preferential treatment. For purposes of this paragraph, a ''series of importations'' means two or more entries covering articles arriving on the same day from the same exporter and consigned to the same person.

**§ 10.247 Verification and justification of claim for preferential treatment.**

(a) *Verification by Customs.* A claim for preferential treatment made under § 10.245, including any statements or other information contained on a Certificate of Origin submitted to Customs under § 10.246, will be subject to whatever verification the port director deems necessary. In the event that the port director for any reason is prevented from verifying the claim, the port director may deny the claim for preferential treatment. A verification of a claim for preferential treatment may involve, but need not be limited to, a review of:

(1) All records required to be made, kept, and made available to Customs by the importer or any other person under part 163 of this chapter;

(2) Documentation and other information regarding the country of origin of an article and its constituent materials, including, but not limited to, production records, information relating to the place of production, the number and identification of the types of machinery used in production, and the number of workers employed in production; and

(3) Evidence to document the use of U.S. or ATPDEA beneficiary country materials in the production of the article in question, such as purchase orders, invoices, bills of lading and other shipping documents, and customs import and clearance documents.

(b) *Importer requirements.* In order to make a claim for preferential treatment under § 10.245, the importer:

(1) Must have records that explain how the importer came to the conclusion that the apparel or other textile article qualifies for preferential treatment. Those records must include documents that support a claim that the article in question qualifies for preferential treatment because it is specifically described in one of the provisions under § 10.243(a). If the importer is claiming that the article incorporates fabric or yarn that was wholly formed in the United States or in an ATPDEA beneficiary country, the importer must have records that identify the producer of the fabric or yarn. A properly completed Certificate of Origin in the form set forth in § 10.244(b) is a record that would serve these purposes;

(2) Must establish and implement internal controls which provide for the periodic review of the accuracy of the Certificates of Origin or other records referred to in paragraph (b)(1) of this section;

(3) Must have shipping papers that show how the article moved from the ATPDEA beneficiary country to the United States. If the imported article was shipped through a country other than an ATPDEA beneficiary country and the invoices and other documents from the ATPDEA beneficiary country do not show the United States as the final destination, the importer also must have documentation that demonstrates that the conditions set forth in § 10.243(d)(3)(i) through (iii) were met; and

(4) Must be prepared to explain, upon request from Customs, how the records and internal controls referred to in paragraphs (b)(1) through (b)(3) of this section justify the importer's claim for preferential treatment.

**§ 10.248 Additional requirements for preferential treatment of brassieres.**

(a) *Definitions.* When used in this section, the following terms have the meanings indicated:

(1) *Producer.* ''Producer'' means an individual, corporation, partnership, association, or other entity or group that exercises direct, daily operational control over the production process in an ATPDEA beneficiary country.

(2) *Entity controlling production.* ''Entity controlling production'' means an individual, corporation, partnership, association, or other entity or group that is not a producer and that controls the production process in an ATPDEA beneficiary country through a contractual relationship or other indirect means.

(3) *Fabrics formed in the United States.* ''Fabrics formed in the United States'' means fabrics that were produced by a weaving, knitting, needling, tufting, felting, entangling or other fabric-making process performed in the United States.

(4) *Cost.* ''Cost'' when used with reference to fabrics formed in the United States means:

(i) The price of the fabrics when last purchased, f.o.b. port of exportation, as set out in the invoice or other commercial documents, or, if the price is other than f.o.b. port of exportation:

(A) The price as set out in the invoice or other commercial documents adjusted to arrive at an f.o.b. port of exportation price; or

(B) If no exportation to an ATPDEA beneficiary country is involved, the price as set out in the invoice or other commercial documents, less the freight, insurance, packing, and other costs incurred in transporting the fabrics to the place of production if included in that price; or

(ii) If the price cannot be determined under paragraph (a)(4)(i) of this section or if Customs finds that price to be unreasonable, all reasonable expenses

incurred in the growth, production, manufacture, or other processing of the fabrics, including the cost or value of materials (which includes the cost of non-recoverable scrap generated in forming the fabrics) and general expenses, plus a reasonable amount for profit, and the freight, insurance, packing, and other costs, if any, incurred in transporting the fabrics to the port of exportation.

(5) *Declared customs value.* ''Declared customs value'' when used with reference to fabric contained in an article means the sum of:

(i) The cost of fabrics formed in the United States that the producer or entity controlling production can verify; and

(ii) The cost of all other fabric contained in the article, exclusive of all findings and trimmings, determined as follows:

(A) In the case of fabric purchased by the producer or entity controlling production, the f.o.b. port of exportation price of the fabric as set out in the invoice or other commercial documents, or, if the price is other than f.o.b. port of exportation:

(*1*) The price as set out in the invoice or other commercial documents adjusted to arrive at an f.o.b. port of exportation price, plus expenses for embroidering and dyeing, printing, and finishing operations applied to the fabric if not included in that price; or

(*2*) If no exportation to an ATPDEA beneficiary country is involved, the price as set out in the invoice or other commercial documents, plus expenses for embroidering and dyeing, printing, and finishing operations applied to the fabric if not included in that price, but less the freight, insurance, packing, and other costs incurred in transporting the fabric to the place of production if included in that price;

(B) In the case of fabric for which the cost cannot be determined under paragraph (a)(5)(ii)(A) of this section or if Customs finds that cost to be unreasonable, all reasonable expenses incurred in the growth, production, or manufacture of the fabric, including the cost or value of materials (which includes the cost of non-recoverable scrap generated in the growth, production, or manufacture of the fabric), general expenses and embroidering and dyeing, printing, and finishing expenses, plus a reasonable amount for profit, and the freight, insurance, packing, and other costs, if any, incurred in transporting the fabric to the port of exportation;

(C) In the case of fabric components purchased by the producer or entity controlling production, the f.o.b. port of exportation price of those fabric components as set out in the invoice or other commercial documents, less the cost or value of any non-textile materials, and less expenses for cutting or other processing to create the fabric components other than knitting to shape, that the producer or entity controlling production can verify, or, if the price is other than f.o.b. port of exportation:

(*1*) The price as set out in the invoice or other commercial documents adjusted to arrive at an f.o.b. port of exportation price, less the cost or value of any non-textile materials, and less expenses for cutting or other processing to create the fabric components other than knitting to shape, that the producer or entity controlling production can verify; or

(*2*) If no exportation to an ATPDEA beneficiary country is involved, the price as set out in the invoice or other commercial documents, less the cost or value of any non-textile materials, and less expenses for cutting or other processing to create the fabric components other than knitting to shape, that the producer or entity controlling production can verify, and less the freight, insurance, packing, and other costs incurred in transporting the fabric components to the place of production if included in that price; and

(D) In the case of fabric components for which a fabric cost cannot be determined under paragraph (a)(5)(ii)(C) of this section or if Customs finds that cost to be unreasonable: all reasonable expenses incurred in the growth, production, or manufacture of the fabric components, including the cost or value of materials (which does not include the cost of recoverable scrap generated in the growth, production, or manufacture of the fabric components) and general expenses, but excluding the cost or value of any non-textile materials, and excluding expenses for cutting or other processing to create the fabric components other than knitting to shape, that the producer or entity controlling production can verify, plus a reasonable amount for profit, and the freight, insurance, packing, and other costs, if any, incurred in transporting the fabric components to the port of exportation.

(6) *Year.* ''Year'' means a 12-month period beginning on October 1 and ending on September 30 but does not include any 12-month period that began prior to October 1, 2002.

(7) *Entered.* ''Entered'' means entered, or withdrawn from warehouse for consumption, in the customs territory of the United States.

(b) *Limitations on preferential treatment*—(1) *General.* During the year that begins on October 1, 2003, and during any subsequent year, articles of a producer or an entity controlling production that conform to the production standards set forth in § 10.243(a)(4) will be eligible for preferential treatment only if:

(i) The aggregate cost of fabrics (exclusive of all findings and trimmings) formed in the United States that were used in the production of all of those articles of that producer or that entity controlling production that are entered as articles described in § 10.243(a)(4) during the immediately preceding year was at least 75 percent of the aggregate declared customs value of the fabric (exclusive of all findings and trimmings) contained in all of those articles of that producer or that entity controlling production that are entered as articles described in § 10.243(a)(4) during that year; or

(ii) In a case in which the 75 percent requirement set forth in paragraph (b)(1)(i) of this section was not met during a year and therefore those articles of that producer or that entity controlling production were not eligible for preferential treatment during the following year, the aggregate cost of fabrics (exclusive of all findings and trimmings) formed in the United States that were used in the production of all of those articles of that producer or that entity controlling production that conform to the production standards set forth in § 10.243(a)(4) and that were entered during the immediately preceding year was at least 85 percent of the aggregate declared customs value of the fabric (exclusive of all findings and trimmings) contained in all of those articles of that producer or that entity controlling production that conform to the production standards set forth in § 10.243(a)(4) and that were entered during that year; and

(iii) In conjunction with the filing of the claim for preferential treatment under § 10.245, the importer records on the entry summary or warehouse withdrawal for consumption (Customs Form 7501, column 34), or its electronic equivalent, the distinct and unique identifier assigned by Customs to the applicable documentation prescribed under paragraph (c) of this section.

(2) *Rules of application*—(i) *General.* For purposes of paragraphs (b)(1)(i) and (b)(1)(ii) of this section and for purposes of preparing and filing the documentation prescribed in paragraph (c) of this section, the following rules will apply:

(A) The articles in question must have been produced in the manner specified in § 10.243(a)(4) and the articles in

question must be entered within the same year;

(B) Articles that are exported to countries other than the United States and are never entered are not to be considered in determining compliance with the 75 or 85 percent standard specified in paragraph (b)(1)(i) or paragraph (b)(1)(ii) of this section;

(C) Articles that are entered under an HTSUS subheading other than the HTSUS subheading which pertains to articles described in § 10.243(a)(4) are not to be considered in determining compliance with the 75 percent standard specified in paragraph (b)(1)(i) of this section;

(D) For purposes of determining compliance with the 85 percent standard specified in paragraph (b)(1)(ii) of this section, all articles that conform to the production standards set forth in § 10.243(a)(4) must be considered, regardless of the HTSUS subheading under which they were entered;

(E) Fabric components and fabrics that constitute findings or trimmings are not to be considered in determining compliance with the 75 or 85 percent standard specified in paragraph (b)(1)(i) or paragraph (b)(1)(ii) of this section;

(F) Beginning October 1, 2003, in order for articles to be eligible for preferential treatment in a given year, a producer of, or entity controlling production of, those articles must have met the 75 percent standard specified in paragraph (b)(1)(i) of this section during the immediately preceding year. If articles of a producer or entity controlling production fail to meet the 75 percent standard specified in paragraph (b)(1)(i) of this section during a year, articles of that producer or entity controlling production:

(*1*) Will not be eligible for preferential treatment during the following year;

(*2*) Will remain ineligible for preferential treatment until the year that follows a year in which articles of that producer or entity controlling production met the 85 percent standard specified in paragraph (b)(1)(ii) of this section; and

(*3*) After the 85 percent standard specified in paragraph (b)(1)(ii) of this section has been met, will again be subject to the 75 percent standard specified in paragraph (b)(1)(i) of this section during the following year for purposes of determining eligibility for preferential treatment in the next year.

(G) A new producer or new entity controlling production, that is, a producer or entity controlling production who did not produce or control production of articles that were entered as articles described in § 10.243(a)(4) during the immediately preceding year, must first establish compliance with the 85 percent standard specified in paragraph (b)(1)(ii) of this section as a prerequisite to preparation of the declaration of compliance referred to in paragraph (c) of this section;

(H) A declaration of compliance prepared by a producer or by an entity controlling production must cover all production of that producer or all production that the entity controls for the year in question;

(I) A producer would not prepare a declaration of compliance if all of its production is covered by a declaration of compliance prepared by an entity controlling production;

(J) In the case of a producer, the 75 or 85 percent standard specified in paragraph (b)(1)(i) or paragraph (b)(1)(ii) of this section and the declaration of compliance procedure under paragraph (c) of this section apply to all articles of that producer for the year in question, even if some but not all of that production is also covered by a declaration of compliance prepared by an entity controlling production;

(K) The U.S. importer does not have to be the producer or the entity controlling production who prepared the declaration of compliance; and

(L) The exclusion references regarding findings and trimmings in paragraph (b)(1)(i) and paragraph (b)(1)(ii) of this section apply to all findings and trimmings, whether or not they are of foreign origin.

(ii) *Examples.* The following examples will illustrate application of the principles set forth in paragraph (b)(2)(i) of this section.

*Example 1.* An ATPDEA beneficiary country producer of articles that meet the production standards specified in § 10.243(a)(4) in the first year sends 50 percent of that production to ATPDEA region markets and the other 50 percent to the U.S. market; the cost of the fabrics formed in the United States equals 100 percent of the value of all of the fabric in the articles sent to the ATPDEA region and 60 percent of the value of all of the fabric in the articles sent to the United States. Although the cost of fabrics formed in the United States is more than 75 percent of the value of all of the fabric used in all of the articles produced, this producer could not prepare a valid declaration of compliance because the articles sent to the United States did not meet the minimum 75 percent standard.

*Example 2.* A producer sends to the United States in the first year three shipments of articles that meet the description in § 10.243(a)(4); one of those shipments is entered under the HTSUS subheading that covers articles described in § 10.243(a)(4), the second shipment is entered under the HTSUS subheading that covers articles described in § 10.243(a)(7), and the third shipment is entered under subheading 9802.00.80, HTSUS. In determining whether the minimum 75 percent standard has been met in the first year for purposes of entry of articles under the HTSUS subheading that covers articles described in § 10.243(a)(4) during the following (that is, second) year, consideration must be restricted to the articles in the first shipment and therefore must not include the articles in the second and third shipments.

*Example 3.* A producer in the second year begins production of articles that conform to the production standards specified in § 10.243(a)(4); some of those articles are entered in that year under HTSUS subheading 6212.10 and others under HTSUS subheading 9802.00.80 but none are entered in that year under the HTSUS subheading which pertains to articles described in § 10.243(a)(4) because the 75 percent standard had not been met in the preceding (that is, first) year. In this case the 85 percent standard applies, and all of the articles that were entered under the various HTSUS provisions in the second year must be taken into account in determining whether that 85 percent standard has been met. If the 85 percent was met in the aggregate for all of the articles entered in the second year, in the next (that is, third) year articles of that producer may receive preferential treatment under the HTSUS subheading which pertains to articles described in § 10.243(a)(4).

*Example 4.* An entity controlling production of articles that meet the description in § 10.243(a)(4) buys for the U.S., Canadian and Mexican markets; the articles in each case are first sent to the United States where they are entered for consumption and then placed in a commercial warehouse from which they are shipped to various stores in the United States, Canada and Mexico. Notwithstanding the fact that some of the articles ultimately ended up in Canada or Mexico, a declaration of compliance prepared by the entity controlling production must cover all of the articles rather than only those that remained in the United States because all of those articles had been entered for consumption.

*Example 5.* Fabric is cut and sewn in the United States with other U.S. materials to form cups which are joined together to form brassiere front subassemblies in the United States, and those front subassemblies are then placed in a warehouse in the United States where they are held until the following year; during that following year all of the front subassemblies are shipped to an ATPDEA beneficiary country where they are assembled with elastic strips and labels produced in an Asian country and other fabrics, components or materials produced in the ATPDEA beneficiary country to form articles that meet the production standards specified in § 10.243(a)(4) and that are then shipped to the United States and entered during that same year. In determining whether the entered articles meet the minimum 75 or 85 percent standard, the fabric in the elastic strips and labels is to be disregarded entirely because the strips and labels constitute findings or trimmings for purposes of this section, and all of the fabric in the front subassemblies is countable

because it was all formed in the United States and used in the production of articles that were entered in the same year.

*Example 6.* An ATPDEA beneficiary country producer's entire production of articles that meet the description in § 10.243(a)(4) is sent to a U.S. importer in two separate shipments, one in February and the other in June of the same calendar year; the articles shipped in February do not meet the minimum 75 percent standard, the articles shipped in June exceed the 85 percent standard, and the articles in the two shipments, taken together, do meet the 75 percent standard; the articles covered by the February shipment are entered for consumption on March 1 of that calendar year, and the articles covered by the June shipment are placed in a Customs bonded warehouse upon arrival and are subsequently withdrawn from warehouse for consumption on November 1 of that calendar year. The ATPDEA beneficiary country producer may not prepare a valid declaration of compliance covering the articles in the first shipment because those articles did not meet the minimum 75 percent standard and because those articles cannot be included with the articles of the second shipment on the same declaration of compliance since they were entered in a different year. However, the ATPDEA beneficiary country producer may prepare a valid declaration of compliance covering the articles in the second shipment because those articles did meet the requisite 85 percent standard which would apply for purposes of entry of articles in the following year.

*Example 7.* A producer in the second year begins production of articles exclusively for the U.S. market that meet the production standards specified in § 10.243(a)(4), but the entered articles do not meet the requisite 85 percent standard until the third year. The producer's articles may not receive preferential treatment during the second year because there was no production (and thus there were no entered articles) in the immediately preceding (that is, first) year on which to assess compliance with the 75 percent standard. The producer's articles also may not receive preferential treatment during the third year because the 85 percent standard was not met in the immediately preceding (that is, second) year. However, the producer's articles are eligible for preferential treatment during the fourth year based on compliance with the 85 percent standard in the immediately preceding (that is, third) year.

*Example 8.* An entity controlling production (Entity A) uses five ATPDEA beneficiary country producers (Producers 1–5), all of which produce only articles that meet the description in § 10.243(a)(4); Producers 1–4 send all of their production to the United States and Producer 5 sends 10 percent of its production to the United States and the rest to Europe; Producers 1–3 and Producer 5 produce only pursuant to contracts with Entity A, but Producer 4 also operates independently of Entity A by producing for several U.S. importers, one of which is an entity controlling production (Entity B) that also controls all of the production of articles of one other producer (Producer 6) which sends all of its production to the United States. A declaration of compliance prepared by Entity A must cover all of the articles of Producers 1–3 and the 10 percent of articles of Producer 5 that are sent to the United States and that portion of the articles of Producer 4 that are produced pursuant to the contract with Entity A, because Entity A controls the production of those articles. There is no need for Producers 1–3 and Producer 5 to prepare a declaration of compliance because they have no production that is not covered by a declaration of compliance prepared by an entity controlling production. A declaration of compliance prepared by Producer 4 would cover all of its production, that is, articles produced for Entity A, articles produced for Entity B, and articles produced independently for other U.S. importers; a declaration of compliance prepared by Entity B must cover that portion of the production of Producer 4 that it controls as well as all of the production of Producer 6 because Entity B also controls all of the production of Producer 6. Producer 6 would not prepare a declaration of compliance because all of its production is covered by the declaration of compliance prepared by Entity B.

(c) *Documentation*—(1) *Initial declaration of compliance.* In order for an importer to comply with the requirement set forth in paragraph (b)(1)(iii) of this section, the producer or the entity controlling production must have filed with Customs, in accordance with paragraph (c)(4) of this section, a declaration of compliance with the applicable 75 or 85 percent requirement prescribed in paragraph (b)(1)(i) or (b)(1)(ii) of this section. After filing of the declaration of compliance has been completed, Customs will advise the producer or the entity controlling production of the distinct and unique identifier assigned to that declaration. The producer or the entity controlling production will then be responsible for advising each appropriate U.S. importer of that distinct and unique identifier for purposes of recording that identifier on the entry summary or warehouse withdrawal. In order to provide sufficient time for advising the U.S. importer of that distinct and unique identifier prior to the arrival of the articles in the United States, the producer or the entity controlling production should file the declaration of compliance with Customs at least 10 calendar days prior to the date of the first shipment of the articles to the United States.

(2) *Amended declaration of compliance.* If the information on the declaration of compliance referred to in paragraph (c)(1) of this section is based on an estimate because final year-end information was not available at that time and the final data differs from the estimate, or if the producer or the entity controlling production has reason to believe for any other reason that the declaration of compliance that was filed contained erroneous information, within 30 calendar days after the final year-end information becomes available or within 30 calendar days after the date of discovery of the error:

(i) The producer or the entity controlling production must file with the Customs office identified in paragraph (c)(4) of this section an amended declaration of compliance containing that final year-end information or other corrected information; or

(ii) If that final year-end information or other corrected information demonstrates noncompliance with the applicable 75 or 85 percent requirement, the producer or the entity controlling production must in writing advise both the Customs office identified in paragraph (c)(4) of this section and each appropriate U.S. importer of that fact.

(3) *Form and preparation of declaration of compliance*—(i) *Form.* The declaration of compliance referred to in paragraph (c)(1) of this section may be printed and reproduced locally and must be in the following format:

BILLING CODE 1505–01–D

| Andean Trade Promotion and Drug Eradication Act<br>Declaration of Compliance for Brassieres<br>(19 CFR 10.243(a)(4) and 10.248) | |
|---|---|
| 1. Year beginning date: October 1, ____.<br>Year ending date: September 30, ____. | Official U.S. Customs Use Only<br>Assigned number: _____<br>Assignment date: _____ |
| 2. Identity of preparer (producer or entity controlling production):<br><br>Full name and address: | Telephone number: _____<br>Facsimile number: _____<br>Importer identification number: _____ |
| 3. If the preparer is an entity controlling production, provide the following for each producer:<br><br>Full name and address: | Telephone number: _____<br>Facsimile number: _____ |
| 4. Aggregate cost of fabrics formed in the United States that were used in the production of brassieres that were entered during the year: _____ | |
| 5. Aggregate declared customs value of the fabric contained in brassieres that were entered during the year: _____ | |
| 6. I declare that the aggregate cost of fabric formed in the United States was at least 75 percent (or 85 percent, if applicable under 19 CFR 10.248(b)(1)(ii)) of the aggregate declared customs value of the fabric contained in brassieres entered during the year. | |
| 7. Authorized signature:<br>_____<br><br>Date: | 8. Name and title (print or type): |

BILLING CODE 1505–01–C

(ii) *Preparation.* The following rules will apply for purposes of completing the declaration of compliance set forth in paragraph (c)(3)(i) of this section:

(A) In block 1, fill in the year commencing October 1 and ending September 30 of the calendar year during which the applicable 75 or 85 percent standard specified in paragraph (b)(1)(i) or paragraph (b)(1)(ii) of this section was met;

(B) Block 2 should state the legal name and address (including country) of the preparer and should also include the preparer's importer identification number (see § 24.5 of this chapter), if the preparer has one;

(C) Block 3 should state the legal name and address (including country) of the ATPDEA beneficiary country producer if that producer is not already identified in block 2. If there is more than one producer, attach a list stating the legal name and address (including country) of all additional producers;

(D) Blocks 4 and 5 apply only to articles that were entered during the year identified in block 1; and

(E) In block 7, the signature must be that of an authorized officer, employee, agent or other person having knowledge of the relevant facts and the date must be the date on which the declaration of compliance was completed and signed.

(4) *Filing of declaration of compliance.* The declaration of compliance referred to in paragraph (c)(1) of this section:

(i) Must be completed either in the English language or in the language of the country in which the articles covered by the declaration were produced. If the declaration is completed in a language other than English, the producer or the entity controlling production must provide to Customs upon request a written English translation of the declaration; and

(ii) Must be filed with the New York Strategic Trade Center, U.S. Customs Service, 1 Penn Plaza, New York, New York 10119.

(d) *Verification of declaration of compliance*—(1) *Verification procedure.* A declaration of compliance filed under this section will be subject to whatever verification Customs deems necessary. In the event that Customs for any reason is prevented from verifying the statements made on a declaration of compliance, Customs may deny any claim for preferential treatment made

under § 10.245 that is based on that declaration. A verification of a declaration of compliance may involve, but need not be limited to, a review of:

(i) All records required to be made, kept, and made available to Customs by the importer, the producer, the entity controlling production, or any other person under part 163 of this chapter;

(ii) Documentation and other information regarding all articles that meet the production standards specified in § 10.243(a)(4) that were exported to the United States and that were entered during the year in question, whether or not a claim for preferential treatment was made under § 10.245. Those records and other information include, but are not limited to, work orders and other production records, purchase orders, invoices, bills of lading and other shipping documents;

(iii) Evidence to document the cost of fabrics formed in the United States that were used in the production of the articles in question, such as purchase orders, invoices, bills of lading and other shipping documents, and customs import and clearance documents, work orders and other production records, and inventory control records;

(iv) Evidence to document the cost or value of all fabric other than fabrics formed in the United States that were used in the production of the articles in question, such as purchase orders, invoices, bills of lading and other shipping documents, and customs import and clearance documents, work orders and other production records, and inventory control records; and

(v) Accounting books and documents to verify the records and information referred to in paragraphs (d)(1)(ii) through (d)(1)(iv) of this section. The verification of purchase orders, invoices and bills of lading will be accomplished through the review of a distinct audit trail. The audit trail documents must consist of a cash disbursement or purchase journal or equivalent records to establish the purchase of the fabric. The headings in each of these journals or other records must contain the date, vendor name, and amount paid for the fabric. The verification of production records and work orders will be accomplished through analysis of the inventory records of the producer or entity controlling production. The inventory records must reflect the production of the finished article which must be referenced to the original purchase order or lot number covering the fabric used in production. In the inventory production records, the inventory should show the opening balance of the inventory plus the purchases made during the accounting period and the inventory closing balance.

(2) *Notice of determination.* If, based on a verification of a declaration of compliance filed under this section, Customs determines that the applicable 75 or 85 percent standard specified in paragraph (b)(1)(i) or paragraph (b)(1)(ii) of this section was not met, Customs will publish a notice of that determination in the **Federal Register.**

■ 6a. On page 81, a new center heading, followed by new §§ 10.251 through 10.257, is added to the table of contents for part 10 to read as follows:

**Extension of ATPA Benefits to Tuna and Certain Other Non-Textile Articles**

Sec.
10.251 Applicability.
10.252 Definitions.
10.253 Articles eligible for preferential treatment.
10.254 Certificate of Origin.
10.255 Filing of claim for preferential treatment.
10.256 Maintenance of records and submission of Certificate by importer.
10.257 Verification and justification of claim for preferential treatment.

■ 6b. On page 207, a new center heading, followed by new §§ 10.251 through 10.257, is added to read as follows:

## Extension of ATPA Benefits to Tuna and Certain Other Non-Textile Articles

### § 10.251 Applicability.

Title XXXI of Public Law 107–210 (116 Stat. 933), entitled the Andean Trade Promotion and Drug Eradication Act (ATPDEA), amended sections 202, 203, 204, and 208 of the Andean Trade Preference Act (the ATPA, 19 U.S.C. 3201–3206) to authorize the President to extend additional trade benefits to ATPA beneficiary countries that have been designated as ATPDEA beneficiary countries. Sections 204(b)(1) and (b)(4) of the ATPA (19 U.S.C. 3203(b)(1) and (b)(4)) provide for the preferential treatment of certain non-textile articles that were not entitled to duty-free treatment under the ATPA prior to enactment of the ATPDEA. The provisions of §§ 10.251–10.257 of this part set forth the legal requirements and procedures that apply for purposes of obtaining preferential treatment pursuant to ATPA sections 204(b)(1) and (b)(4).

### § 10.252 Definitions.

When used in §§ 10.251 through 10.257, the following terms have the meanings indicated:

*ATPA.* ''ATPA'' means the Andean Trade Preference Act, 19 U.S.C. 3201–3206.

*ATPDEA beneficiary country.* ''ATPDEA beneficiary country'' means a ''beneficiary country'' as defined in § 10.202(a) for purposes of the ATPA which the President also has designated as a beneficiary country for purposes of preferential treatment of products under 19 U.S.C. 3203(b)(1) and (b)(4) and which has been the subject of a finding by the President or his designee, published in the **Federal Register**, that the beneficiary country has satisfied the requirements of 19 U.S.C. 3203(b)(5)(A)(ii).

*ATPDEA beneficiary country vessel.* ''ATPDEA beneficiary country vessel'' means a vessel:

(a) Which is registered or recorded in an ATPDEA beneficiary country;

(b) Which sails under the flag of an ATPDEA beneficiary country;

(c) Which is at least 75 percent owned by nationals of an ATPDEA beneficiary country or by a company having its principal place of business in an ATPDEA beneficiary country, of which the manager or managers, chairman of the board of directors or of the supervisory board, and the majority of the members of those boards are nationals of an ATPDEA beneficiary country and of which, in the case of a company, at least 50 percent of the capital is owned by an ATPDEA beneficiary country or by public bodies or nationals of an ATPDEA beneficiary country;

(d) Of which the master and officers are nationals of an ATPDEA beneficiary country; and

(e) Of which at least 75 percent of the crew are nationals of an ATPDEA beneficiary country.

*HTSUS.* ''HTSUS'' means the Harmonized Tariff Schedule of the United States.

*Preferential treatment.* ''Preferential treatment'' means entry, or withdrawal from warehouse for consumption, in the customs territory of the United States free of duty and free of any quantitative restrictions in the case of tuna described in § 10.253(a)(1) and free of duty in the case of any article described in § 10.253(a)(2).

*United States vessel.* ''United States vessel'' means a vessel having a certificate of documentation with a fishery endorsement under chapter 121 of title 46 of the United States Code.

### § 10.253 Articles eligible for preferential treatment.

(a) *General.* Preferential treatment applies to any of the following articles, provided that the article in question is imported directly into the customs territory of the United States from an

ATPDEA beneficiary country within the meaning of paragraph (b) of this section:

(1) Tuna that is harvested by United States vessels or ATPDEA beneficiary country vessels, that is prepared or preserved in any manner, in an ATPDEA beneficiary country, in foil or other flexible airtight containers weighing with their contents not more than 6.8 kilograms each; and

(2) Any of the following articles that the President has determined are not import-sensitive in the context of imports from ATPDEA beneficiary countries, provided that the article in question meets the country of origin and value content requirements set forth in paragraphs (c) and (d) of this section:

(i) Footwear not designated on December 4, 1991, as eligible articles for the purpose of the Generalized System of Preferences (GSP) under Title V, Trade Act of 1974, as amended (19 U.S.C. 2461 through 2467);

(ii) Petroleum, or any product derived from petroleum, provided for in headings 2709 and 2710 of the HTSUS;

(iii) Watches and watch parts (including cases, bracelets, and straps), of whatever type including, but not limited to, mechanical, quartz digital or quartz analog, if those watches or watch parts contain any material which is the product of any country with respect to which HTSUS column 2 rates of duty apply; and

(iv) Handbags, luggage, flat goods, work gloves, and leather wearing apparel that were not designated on August 5, 1983, as eligible articles for purposes of the GSP.

(b) *Imported directly defined.* For purposes of paragraph (a) of this section, the words ''imported directly'' mean:

(1) Direct shipment from any ATPDEA beneficiary country to the United States without passing through the territory of any country that is not an ATPDEA beneficiary country;

(2) If the shipment is from any ATPDEA beneficiary country to the United States through the territory of any country that is not an ATPDEA beneficiary country, the articles in the shipment do not enter into the commerce of any country that is not an ATPDEA beneficiary country while en route to the United States and the invoices, bills of lading, and other shipping documents show the United States as the final destination; or

(3) If the shipment is from any ATPDEA beneficiary country to the United States through the territory of any country that is not an ATPDEA beneficiary country, and the invoices and other documents do not show the United States as the final destination, the articles in the shipment upon arrival in the United States are imported directly only if they:

(i) Remained under the control of the customs authority of the intermediate country;

(ii) Did not enter into the commerce of the intermediate country except for the purpose of sale other than at retail, and the port director is satisfied that the importation results from the original commercial transaction between the importer and the producer or the producer's sales agent; and

(iii) Were not subjected to operations other than loading or unloading, and other activities necessary to preserve the articles in good condition.

(c) *Country of origin criteria*—(1) *General.* Except as otherwise provided in paragraph (c)(2) of this section, an article described in paragraph (a)(2) of this section may be eligible for preferential treatment if the article is either:

(i) Wholly the growth, product, or manufacture of an ATPDEA beneficiary country; or

(ii) A new or different article of commerce which has been grown, produced, or manufactured in an ATPDEA beneficiary country.

(2) *Exceptions.* No article will be eligible for preferential treatment by virtue of having merely undergone simple (as opposed to complex or meaningful) combining or packaging operations, or mere dilution with water or mere dilution with another substance that does not materially alter the characteristics of the article. The principles and examples set forth in § 10.195(a)(2) will apply equally for purposes of this paragraph.

(d) *Value content requirement*—(1) *General.* An article may be eligible for preferential treatment only if the sum of the cost or value of the materials produced in an ATPDEA beneficiary country or countries, plus the direct costs of processing operations performed in an ATPDEA beneficiary country or countries, is not less than 35 percent of the appraised value of the article at the time it is entered.

(2) *Commonwealth of Puerto Rico, U.S. Virgin Islands and CBI beneficiary countries.* For the specific purpose of determining the percentage referred to in paragraph (d)(1) of this section, the term ''ATPDEA beneficiary country'' includes the Commonwealth of Puerto Rico, the U.S. Virgin Islands, and any CBI beneficiary country as defined in § 10.191(b)(1). Any cost or value of materials or direct costs of processing operations attributable to the Virgin Islands or any CBI beneficiary country must be included in the article prior to its final exportation to the United States from an ATPDEA beneficiary country as defined in § 10.252.

(3) *Materials produced in the United States.* For purposes of determining the percentage referred to in paragraph (d)(1) of this section, an amount not to exceed 15 percent of the appraised value of the article at the time it is entered may be attributed to the cost or value of materials produced in the customs territory of the United States (other than the Commonwealth of Puerto Rico). The principles set forth in paragraph (d)(4)(i) of this section will apply in determining whether a material is ''produced in the customs territory of the United States'' for purposes of this paragraph.

(4) *Cost or value of materials*—(i) *''Materials produced in an ATPDEA beneficiary country or countries'' defined.* For purposes of paragraph (d)(1) of this section, the words ''materials produced in an ATPDEA beneficiary country or countries'' refer to those materials incorporated in an article which are either:

(A) Wholly the growth, product, or manufacture of an ATPDEA beneficiary country or two or more ATPDEA beneficiary countries; or

(B) Substantially transformed in any ATPDEA beneficiary country or two or more ATPDEA beneficiary countries into a new or different article of commerce which is then used in any ATPDEA beneficiary country as defined in § 10.252 in the production or manufacture of a new or different article which is imported directly into the United States. For purposes of this paragraph (d)(4)(i)(B), no material will be considered to be substantially transformed into a new or different article of commerce by virtue of having merely undergone simple (as opposed to complex or meaningful) combining or packaging operations, or mere dilution with water or mere dilution with another substance that does not materially alter the characteristics of the article. The examples set forth in § 10.196(a), and the principles and examples set forth in § 10.195(a)(2), will apply for purposes of the corresponding context under paragraph (d)(4)(i) of this section.

(ii) *Failure to establish origin.* If the importer fails to maintain adequate records to establish the origin of a material, that material may not be considered to have been grown, produced, or manufactured in an ATPDEA beneficiary country or in the customs territory of the United States for purposes of determining the percentage referred to in paragraph (d)(1) of this section.

(iii) *Determination of cost or value of materials.* (A) The cost or value of materials produced in an ATPDEA beneficiary country or countries or in the customs territory of the United States includes:

(*1*) The manufacturer's actual cost for the materials;

(*2*) When not included in the manufacturer's actual cost for the materials, the freight, insurance, packing, and all other costs incurred in transporting the materials to the manufacturer's plant;

(*3*) The actual cost of waste or spoilage, less the value of recoverable scrap; and

(*4*) Taxes and/or duties imposed on the materials by any ATPDEA beneficiary country or by the United States, provided they are not remitted upon exportation.

(B) Where a material is provided to the manufacturer without charge, or at less than fair market value, its cost or value will be determined by computing the sum of:

(*1*) All expenses incurred in the growth, production, or manufacture of the material, including general expenses;

(*2*) An amount for profit; and

(*3*) Freight, insurance, packing, and all other costs incurred in transporting the material to the manufacturer's plant.

(5) *Direct costs of processing operations*—(i) *Items included.* For purposes of paragraph (d)(1) of this section, the words ''direct costs of processing operations'' mean those costs either directly incurred in, or which can be reasonably allocated to, the growth, production, manufacture, or assembly of the specific merchandise under consideration. Those costs include, but are not limited to the following, to the extent that they are includable in the appraised value of the imported merchandise:

(A) All actual labor costs involved in the growth, production, manufacture, or assembly of the specific merchandise, including fringe benefits, on-the-job training, and the cost of engineering, supervisory, quality control, and similar personnel;

(B) Dies, molds, tooling, and depreciation on machinery and equipment which are allocable to the specific merchandise;

(C) Research, development, design, engineering, and blueprint costs insofar as they are allocable to the specific merchandise; and

(D) Costs of inspecting and testing the specific merchandise.

(ii) *Items not included.* For purposes of paragraph (d)(1) of this section, the words ''direct costs of processing operations'' do not include items which are not directly attributable to the merchandise under consideration or are not costs of manufacturing the product. These include, but are not limited to:

(A) Profit; and

(B) General expenses of doing business which either are not allocable to the specific merchandise or are not related to the growth, production, manufacture, or assembly of the merchandise, such as administrative salaries, casualty and liability insurance, advertising, and salesmen's salaries, commissions, or expenses.

(6) *Articles wholly the growth, product, or manufacture of an ATPDEA beneficiary country.* Any article which is wholly the growth, product, or manufacture of an ATPDEA beneficiary country as defined in § 10.252, and any article produced or manufactured in an ATPDEA beneficiary country as defined in § 10.252 exclusively from materials which are wholly the growth, product, or manufacture of an ATPDEA beneficiary country or countries, will normally be presumed to meet the requirement set forth in paragraph (d)(1) of this section.

**§ 10.254 Certificate of Origin.**

A Certificate of Origin as specified in § 10.256 must be employed to certify that an article described in § 10.253(a) being exported from an ATPDEA beneficiary country to the United States qualifies for the preferential treatment referred to in § 10.251. The Certificate of Origin must be prepared by the exporter in the ATPDEA beneficiary country. Where the ATPDEA beneficiary country exporter is not the producer of the article, that exporter may complete and sign a Certificate of Origin on the basis of:

(a) Its reasonable reliance on the producer's written representation that the article qualifies for preferential treatment; or

(b) A completed and signed Certificate of Origin for the article voluntarily provided to the exporter by the producer.

**§ 10.255 Filing of claim for preferential treatment.**

(a) *Declaration.* In connection with a claim for preferential treatment for an article described in § 10.253(a), the importer must make a written declaration that the article qualifies for that treatment. The written declaration should be made by including on the entry summary, or equivalent documentation, the symbol ''J+'' as a prefix to the subheading of the HTSUS in which the article in question is classified. Except in any of the circumstances described in § 10.256(d)(1), the declaration required under this paragraph must be based on a complete and properly executed original Certificate of Origin that covers the article being imported and that is in the possession of the importer.

(b) *Corrected declaration.* If, after making the declaration required under paragraph (a) of this section, the importer has reason to believe that a Certificate of Origin on which a declaration was based contains information that is not correct, the importer must within 30 calendar days after the date of discovery of the error make a corrected declaration and pay any duties that may be due. A corrected declaration will be effected by submission of a letter or other written statement to the Customs port where the declaration was originally filed.

**§ 10.256 Maintenance of records and submission of Certificate by importer.**

(a) *Maintenance of records.* Each importer claiming preferential treatment for an article under § 10.255 must maintain in the United States, in accordance with the provisions of part 163 of this chapter, all records relating to the importation of the article. Those records must include the original Certificate of Origin referred to in § 10.255(a) and any other relevant documents or other records as specified in § 163.1(a) of this chapter.

(b) *Submission of Certificate.* An importer who claims preferential treatment on an article under § 10.255(a) must provide, at the request of the port director, a copy of the Certificate of Origin pertaining to the article. A Certificate of Origin submitted to Customs under this paragraph:

(1) Must be on Customs Form 449, including privately-printed copies of that Form, or, as an alternative to Customs Form 449, in an approved computerized format or other medium or format as is approved by the Office of Field Operations, U.S. Customs Service, Washington, DC 20229. An alternative format must contain the same information and certification set forth on Customs Form 449;

(2) Must be signed by the exporter or by the exporter's authorized agent having knowledge of the relevant facts;

(3) Must be completed either in the English language or in the language of the country from which the article is exported. If the Certificate is completed in a language other than English, the importer must provide to Customs upon request a written English translation of the Certificate; and

(4) May be applicable to:

(i) A single importation of an article into the United States, including a single shipment that results in the filing of one or more entries and a series of shipments that results in the filing of one entry; or

(ii) Multiple importations of identical articles into the United States that occur within a specified blanket period, not to exceed 12 months, set out in the Certificate by the exporter. For purposes of this paragraph, ''identical articles'' means articles that are the same in all material respects, including physical characteristics, quality, and reputation.

(c) *Correction and nonacceptance of Certificate.* If the port director determines that a Certificate of Origin is illegible or defective or has not been completed in accordance with paragraph (b) of this section, the importer will be given a period of not less than five working days to submit a corrected Certificate. A Certificate will not be accepted in connection with subsequent importations during a period referred to in paragraph (b)(4)(ii) of this section if the port director determined that a previously imported identical article covered by the Certificate did not qualify for preferential treatment.

(d) *Certificate not required*—(1) *General.* Except as otherwise provided in paragraph (d)(2) of this section, an importer is not required to have a Certificate of Origin in his possession for:

(i) An importation of an article for which the port director has in writing waived the requirement for a Certificate of Origin because the port director is otherwise satisfied that the article qualifies for preferential treatment;

(ii) A non-commercial importation of an article; or

(iii) A commercial importation of an article whose value does not exceed US$2,500, provided that, unless waived by the port director, the producer, exporter, importer or authorized agent includes on, or attaches to, the invoice or other document accompanying the shipment the following signed statement:

I hereby certify that the article covered by this shipment qualifies for preferential tariff treatment under the ATPDEA.

Check One:

( ) Producer
( ) Exporter
( ) Importer
( ) Agent

_____
Name

Title

_____
Address

_____
Signature and Date

(2) *Exception.* If the port director determines that an importation described in paragraph (d)(1) of this section forms part of a series of importations that may reasonably be considered to have been undertaken or arranged for the purpose of avoiding a Certificate of Origin requirement under §§ 10.254 through 10.256, the port director will notify the importer in writing that for that importation the importer must have in his possession a valid Certificate of Origin to support the claim for preferential treatment. The importer will have 30 calendar days from the date of the written notice to obtain a valid Certificate of Origin, and a failure to timely obtain the Certificate of Origin will result in denial of the claim for preferential treatment. For purposes of this paragraph, a ''series of importations'' means two or more entries covering articles arriving on the same day from the same exporter and consigned to the same person.

**§ 10.257 Verification and justification of claim for preferential treatment.**

(a) *Verification by Customs.* A claim for preferential treatment made under § 10.255, including any statements or other information contained on a Certificate of Origin submitted to Customs under § 10.256, will be subject to whatever verification the port director deems necessary. In the event that the port director for any reason is prevented from verifying the claim, the port director may deny the claim for preferential treatment. A verification of a claim for preferential treatment may involve, but need not be limited to, a review of:

(1) All records required to be made, kept, and made available to Customs by the importer or any other person under part 163 of this chapter;

(2) Documentation and other information regarding the country of origin of an article and its constituent materials, including, but not limited to, production records, information relating to the place of production, the number and identification of the types of machinery used in production, and the number of workers employed in production; and

(3) Evidence to document the use of U.S. or ATPDEA beneficiary country materials in the production of the article in question, such as purchase orders, invoices, bills of lading and other shipping documents, and customs import and clearance documents.

(b) *Importer requirements.* In order to make a claim for preferential treatment under § 10.255, the importer:

(1) Must have records that explain how the importer came to the conclusion that the article qualifies for preferential treatment. Those records must include documents that support a claim that the article in question qualifies for preferential treatment because it meets the country of origin and value content requirements set forth in § 10.253(c) and (d). A properly completed Certificate of Origin in the form prescribed in § 10.254(b) is a record that would serve this purpose;

(2) Must establish and implement internal controls which provide for the periodic review of the accuracy of the Certificate of Origin or other records referred to in paragraph (b)(1) of this section;

(3) Must have shipping papers that show how the article moved from the ATPDEA beneficiary country to the United States. If the imported article was shipped through a country other than an ATPDEA beneficiary country and the invoices and other documents from the ATPDEA beneficiary country do not show the United States as the final destination, the importer also must have documentation that demonstrates that the conditions set forth in § 10.253(b)(3)(i) through (iii) were met; and

(4) Must be prepared to explain, upon request from Customs, how the records and internal controls referred to in paragraphs (b)(1) through (b)(3) of this section justify the importer's claim for preferential treatment.

## PART 163—RECORDKEEPING

■ 8. In Parts 141 to 199, on page 284, in the Appendix to Part 163, three new listings are added in numerical order under section IV to read as follows:

**Appendix to Part 163—Interim (a)(1)(A) List**

* * * * *

IV. * * *

§ 10.246 ATPDEA Textile Certificate of Origin
§ 10.248 ATPDEA Declaration of Compliance for Brassieres
§ 10.256 ATPDEA Non-textile Certificate of Origin

* * * * *

[FR Doc. 03–55531 Filed 11–28–03; 8:45 am]
BILLING CODE 1505–01–D

Federal Register

Monday,
December 1, 2003

# Part VI

# Department of Defense
# General Services Administration
# National Aeronautics and Space Administration

**48 CFR Parts 2, 9, et al.**

**Federal Acquisition Regulation; Excluded Parties System Enhancement; Proposed Rule**

**DEPARTMENT OF DEFENSE**

**GENERAL SERVICES ADMINISTRATION**

**NATIONAL AERONAUTICS AND SPACE ADMINISTRATION**

**48 CFR Parts 2, 9, 22, 28, 44, and 52**

**[FAR Case 2002–023]**

**RIN 9000–AJ78**

## Federal Acquisition Regulation; Excluded Parties System Enhancement

**AGENCIES:** Department of Defense (DoD), General Services Administration (GSA), and National Aeronautics and Space Administration (NASA).

**ACTION:** Proposed rule.

**SUMMARY:** The Civilian Agency Acquisition Council and the Defense Acquisition Regulations Council (Councils) are proposing to amend the Federal Acquisition Regulation (FAR) to curtail the publication and obviate the need to publish the hardcopy publication of the List of Parties Excluded from Federal Procurement and Nonprocurement Programs (List of Parties) produced by the Government Printing Office (GPO), and publish an electronic list of parties excluded from doing business with the Federal Government online identified as the Excluded Parties List System (EPLS). The new electronic list will enable agencies to input their data directly to the EPLS; improve the reliability of the content by allowing content owners to directly input entries; provide access to historical data that was previously provided through Freedom of Information Act (FOIA) procedures; enhance the ability to verify entries by permitting search by exact name and social security number, and shorten the lead time between exclusionary action taken by agencies and updating the list.

**DATES:** Interested parties should submit comments in writing on or before January 30, 2004 to be considered in the formulation of a final rule.

**ADDRESSES:** Submit written comments to—General Services Administration, FAR Secretariat (MVA), 1800 F Street, NW., Room 4035, ATTN: Laurie Duarte, Washington, DC 20405.

Submit electronic comments via the Internet to—*farcase.2002–023@gsa.gov.*

Please submit comments only and cite FAR case 2002–023 in all correspondence related to this case.

**FOR FURTHER INFORMATION CONTACT:** The FAR Secretariat at (202) 501–4755 for information pertaining to status or publication schedules. For clarification of content, contact Mr. Ralph De Stefano, Procurement Analyst, at (202) 501–1758. Please cite FAR case 2002–023.

**SUPPLEMENTARY INFORMATION:**

### A. Background

The rule, if finalized, will enable agencies to directly input data to update the Excluded Parties List System (EPLS) on parties debarred, suspended, proposed for debarment, or declared ineligible by agencies or excluded by agencies, Government corporations, or the General Accounting Office (GAO). The entry by the agencies will update the content in real time, improve system reliability, eliminate the need for a hard copy list, provide access to the archival data, and enhance the ability to verify entries by permitting a search by exact name and social security number.

The electronic updating of the list by agencies promotes the use of the Internet and emerging technologies within and across the Government agencies and provides citizen-centric Government information. The private sector and state and local governments who wish to avoid doing business with contractors that lack current responsibility, although not required, use the aforementioned list.

This is not a significant regulatory action and, therefore, was not subject to review under Section 6(b) of Executive Order 12866, Regulatory Planning and Review, dated September 30, 1993. This rule is not a major rule under 5 U.S.C. 804.

### B. Regulatory Flexibility Act

The Councils do not expect this proposed rule to have a significant economic impact on a substantial number of small entities within the meaning of the Regulatory Flexibility Act, 5 U.S.C. 601, *et seq.,* because while we have made changes in the way GSA manages and maintains the List of Parties excluded from Federal Procurement and Nonprocurement Programs, the proposed rule does not substantively change procedures for award and administration of contracts. The rule primarily will curtail the publication and obviate the need to publish the hardcopy publication of the List of Parties Excluded from Federal Procurement and Nonprocurement Programs (List of Parties) produced by the Government Printing Office (GPO), and publishes an electronic list of parties excluded from doing business with the Federal Government online identified as the Excluded Parties List System (EPLS). The new electronic list will—

- Enable agencies to input their data directly to the EPLS;
- Improve the reliability of the content by allowing content owners to directly input entries;
- Provide access to historical data that was previously provided through Freedom of Information Act (FOIA) procedures;
- Enhance the ability to verify entries by permitting search by exact name and social security number, and
- Shorten the lead time between exclusionary action taken by agencies and updating the content.

An Initial Regulatory Flexibility Analysis has, therefore, not been performed. We invite comments from small businesses and other interested parties. The Councils will consider comments from small entities concerning the affected FAR Parts 2, 9, 22, 28, 44, and 52 in accordance with 5 U.S.C. 610. Interested parties must submit such comments separately and should cite 5 U.S.C. 601, *et seq.* (FAR case 2002–023), in correspondence.

### C. Paperwork Reduction Act

The Paperwork Reduction Act does not apply because the proposed changes to the FAR do not impose information collection requirements that require the approval of the Office of Management and Budget under 44 U.S.C. 3501, *et seq.*

### List of Subjects in 48 CFR Parts 2, 9, 22, 28, 44, and 52

Government procurement.

Dated: November 25, 2003.

**Ralph J. De Stefano,**

*Acting Director, Acquisition Policy Division.*

Therefore, DoD, GSA, and NASA propose amending 48 CFR parts 2, 9, 22, 28, 44, and 52 as set forth below:

1. The authority citation for 48 CFR parts 2, 9, 22, 28, 44, and 52 is revised to read as follows:

**Authority:** 40 U.S.C. 121(c); 10 U.S.C. chapter 137; and 42 U.S.C. 2473(c).

## PART 2—DEFINITIONS OF WORDS AND TERMS

2. Amend section 2.101 in paragraph (b) by adding, in alphabetical order, the definition ''Excluded Parties List System''; and removing the definition ''List of Parties Excluded from Federal Procurement and Nonprocurement Programs''. The added text reads as follows:

**2.101 Definitions.**

* * * * *

(b) * * *

*Excluded Parties List System* means an electronic database maintained and

posted by the General Services Administration containing the list of all parties suspended, proposed for debarment, debarred, declared ineligible, disqualified or excluded by agencies, government corporations, or by the General Accounting Office.

* * * * *

## PART 9—CONTRACTOR QUALIFICATIONS

3. Amend section 9.105–1 by revising paragraph (c)(1) to read as follows:

### 9.105–1 Obtaining information.

* * * * *

(c) * * *

(1) Excluded Parties List System maintained in accordance with Subpart 9.4.

* * * * *

4. Amend section 9.207 by revising paragraph (a)(9) to read as follows:

### 9.207 Changes in status regarding qualification requirements.

* * * * *

(a) * * *

(9) The source is on the Excluded Parties List System (see Subpart 9.4); or

* * * * *

5. Amend section 9.403 by adding, in alphabetical order, the definitions ''Disqualified'', and ''Excluded or exclusion'' to read as follows:

### 9.403 Definitions.

* * * * *

*Disqualified* means that a person is prohibited from participating in specified Federal procurement or nonprocurement transactions as required under a statute, Executive order (other than Executive Orders 12549 and 12689), or other authority. Examples of disqualifications include persons prohibited under—

(1) The Davis-Bacon Act (40 U.S.C. 3141 *et seq.,* formally 40 U.S.C. 276a);

(2) The Equal Employment Opportunity Acts and Executive orders; or

(3) The Clean Air Act (42 U.S.C. 306), Clean Water Act (33 U.S.C. 508) and Executive Order 11738 (3 CFR, 1973 Comp., p. 799).

*Excluded or exclusion* means—

(1) That a person or commodity is prohibited from being a participant in covered transactions, whether the person has been suspended, debarred, proposed for debarment under Subpart 9.4, voluntarily excluded; or

(2) The act of excluding a person.

* * * * *

6. Revise the section heading and text of section 9.404 to read as follows:

### 9.404 Excluded Parties List System.

(a) The General Services Administration (GSA)—

(1) Operates the web-based Excluded Parties List System (EPLS) database;

(2) Provides technical assistance to Federal agencies in the use of the EPLS; and

(3) Includes in the list the name and telephone number of the official responsible for its maintenance and distribution.

(b) The Excluded Parties List System includes the—

(1) Names and addresses of all contractors debarred, suspended, proposed for debarment, or declared ineligible, with cross-references when more than one name is involved in a single action;

(2) Name of the agency or other authority taking the action;

(3) Cause for the action (see 9.406–2 and 9.407–2 for causes authorized under this subpart) or other statutory or regulatory authority;

(4) Effect of the action;

(5) Termination date for each listing;

(6) DUNS No.;

(7) SSN or TIN (if available and permitted by the laws or executive orders under which the action is undertaken, including the Computer Matching and Privacy Acts); and

(8) Name and telephone number of the agency point of contact for the action.

(c) Each agency must—

(1) Obtain a password(s) from GSA to access the EPLS for data entry;

(2) Notify GSA in the event a password needs to be rescinded (*e.g.,* when agency employee leaves or changes function);

(3) Enter the information required by paragraph (b) of this section within 5 working days after the action becomes effective;

(4) Agencies must give due consideration to whether they are legally permitted to enter the SSN or TIN under the authority under which they suspend or debar.

(5) Update EPLS within 5 working days after modifying or rescinding an action;

(6) In accordance with internal retention procedures, maintain records relating to each debarment, suspension, or proposed debarment taken by the agency;

(7) Establish procedures to ensure that the agency does not solicit offers from, award contracts to, or consent to subcontracts with contractors on whose names are in the Excluded Parties List System database, except as otherwise provided in this subpart;

(8) Direct inquiries concerning listed contractors to the agency or other authority that took the action; and

(9) Contact GSA for technical assistance with the Excluded Parties List System, via the support e-mail address or on the technical support phone line available at the EPLS Web site provided in paragraph (d) of this section.

(d) The Excluded Parties List System is available at *http://epls.gov.*

### 9.405, 9.405–2, 22.1025, 28.203–7, 44.202–2, 44.303, and 52.209–6 [Amended]

7. In 48 CFR parts 9, 22, 28, 44, and 52, remove the words ''List of Parties Excluded from Federal Procurement and Nonprocurement Programs'' and add, in their place, the words ''Excluded Parties List System'' in the following places:

a. 9.405(b), (d)(1), and (d)(4);

b. 9.405–2(b), second sentence, and (b)(2);

c. 22.1025;

d. 28.203–7(c) and (d);

e. 44.202–2(a)(13);

f. 44.303(c); and

g. 52.209–6(c) introductory text, (c)(2), and (c)(3).

## PART 52—SOLICITATION PROVISIONS AND CONTRACT CLAUSES

8. In addition to the amendments set forth above, amend section 52.209–6 by revising the date of the clause to read ''(Date)''.

[FR Doc. 03–29819 Filed 11–28–03; 8:45 am]

BILLING CODE 6820–EP–P

# Reader Aids

**Federal Register**

Vol. 68, No. 230

Monday, December 1, 2003

## CUSTOMER SERVICE AND INFORMATION

| | |
|---|---|
| **Federal Register/Code of Federal Regulations** | |
| General Information, indexes and other finding aids | **202–741–6000** |
| **Laws** | **741–6000** |
| **Presidential Documents** | |
| Executive orders and proclamations | **741–6000** |
| **The United States Government Manual** | **741–6000** |
| **Other Services** | |
| Electronic and on-line services (voice) | **741–6020** |
| Privacy Act Compilation | **741–6064** |
| Public Laws Update Service (numbers, dates, etc.) | **741–6043** |
| TTY for the deaf-and-hard-of-hearing | **741–6086** |

## ELECTRONIC RESEARCH

### World Wide Web

Full text of the daily Federal Register, CFR and other publications is located at: **http://www.access.gpo.gov/nara**

Federal Register information and research tools, including Public Inspection List, indexes, and links to GPO Access are located at: **http://www.archives.gov/federal__register/**

### E-mail

**FEDREGTOC-L** (Federal Register Table of Contents LISTSERV) is an open e-mail service that provides subscribers with a digital form of the Federal Register Table of Contents. The digital form of the Federal Register Table of Contents includes HTML and PDF links to the full text of each document.

To join or leave, go to **http://listserv.access.gpo.gov** and select *Online mailing list archives, FEDREGTOC-L, Join or leave the list (or change settings);* then follow the instructions.

**PENS** (Public Law Electronic Notification Service) is an e-mail service that notifies subscribers of recently enacted laws.

To subscribe, go to **http://listserv.gsa.gov/archives/publaws-l.html** and select *Join or leave the list* (or change settings); then follow the instructions.

**FEDREGTOC-L** and **PENS** are mailing lists only. We cannot respond to specific inquiries.

**Reference questions.** Send questions and comments about the Federal Register system to: **info@fedreg.nara.gov**

The Federal Register staff cannot interpret specific documents or regulations.

## FEDERAL REGISTER PAGES AND DATE, DECEMBER

67013–67356..... 1

## CFR PARTS AFFECTED DURING DECEMBER

At the end of each month, the Office of the Federal Register publishes separately a List of CFR Sections Affected (LSA), which lists parts and sections affected by documents published since the revision date of each title.

## REMINDERS

The items in this list were editorially compiled as an aid to Federal Register users. Inclusion or exclusion from this list has no legal significance.

## RULES GOING INTO EFFECT DECEMBER 1, 2003

**AGRICULTURE DEPARTMENT**

**Agricultural Marketing Service**

Milk marketing orders:
- Central; published 11-28-03

**COMMERCE DEPARTMENT**

**Industry and Security Bureau**

Export administration regulations:
- Commerce Control List—
  - Chemical and biological weapons controls; cross flow filtration equipment; Australia Group understandings implementation; correction; published 12-1-03

**ENERGY DEPARTMENT**

**Federal Energy Regulatory Commission**

Practice and procedure:
- Cash management programs—
  - Participating FERC-regulated entities; reporting requirements; published 10-31-03

**ENVIRONMENTAL PROTECTION AGENCY**

Air programs:
- Fuels and fuel additives—-
  - Gasoline and diesel fuel test method update; published 10-2-03

Air quality implementation plans; approval and promulgation; various States:
- California; published 9-30-03
- Nebraska; published 12-1-03
- Texas; published 9-30-03

**FEDERAL COMMUNICATIONS COMMISSION**

Television stations; table of assignments:
- Texas; published 10-22-03

**HEALTH AND HUMAN SERVICES DEPARTMENT**

**Food and Drug Administration**

Medical devices:
- Immunology and microbiology devices—
  - Endotoxin Assay; Class II special controls classification; published 10-31-03
  - West Nile Virus IgM Capture Elisa Assay; Class II special controls classification; published 10-30-03

**INTERIOR DEPARTMENT**

**Surface Mining Reclamation and Enforcement Office**

Permanent program and abandoned mine land reclamation plan submissions:
- West Virginia; published 12-1-03

**JUSTICE DEPARTMENT**

**Drug Enforcement Administration**

Controlled substances; manufacturers, distributors, and dispensers; registration:
- Diversion Control Program; registration and reregistration application fee schedule; adjustment; published 10-10-03

**PENSION BENEFIT GUARANTY CORPORATION**

Single-employer plans:
- Allocation of assets—
  - Interest assumptions for valuing and paying benefits; published 11-14-03

**SPECIAL COUNSEL OFFICE**

Complaints and allegations; filing requirements and options, including electronic filing; published 11-28-03

**TRANSPORTATION DEPARTMENT**

**Federal Aviation Administration**

Airworthiness directives:
- Dassault; published 12-1-03
- Univair Aircraft Corp.; published 10-14-03

Airworthiness standards:
- Special conditions—
  - Hamilton Sundstrand Model 54460-77E propeller; published 11-17-03

## COMMENTS DUE NEXT WEEK

**AGRICULTURE DEPARTMENT**

**Animal and Plant Health Inspection Service**

Animal welfare:
- Transportation of animals on foreign air carriers; comments due by 12-9-03; published 10-10-03 [FR 03-25788]

**COMMERCE DEPARTMENT**

**National Oceanic and Atmospheric Administration**

International fisheries regulations:
- Fisheries treaty with Pacific Island Countries; impact on human environment; meetings; comments due by 12-8-03; published 10-9-03 [FR 03-25640]

**ENERGY DEPARTMENT**

**Federal Energy Regulatory Commission**

Electric rate and corporate regulation filings:
- Virginia Electric & Power Co. et al.; Open for comments until further notice; published 10-1-03 [FR 03-24818]

**ENVIRONMENTAL PROTECTION AGENCY**

Air pollution; standards of performance for new stationary sources:
- Instrumental test methods; harmonize, simplify, and update; comments due by 12-9-03; published 10-10-03 [FR 03-24909]

Air quality implementation plans; approval and promulgation; various States:
- New Jersey; comments due by 12-12-03; published 11-12-03 [FR 03-28212]

Environmental statements; availability, etc.:
- Coastal nonpoint pollution control program—
  - Minnesota and Texas; Open for comments until further notice; published 10-16-03 [FR 03-26087]

**FEDERAL COMMUNICATIONS COMMISSION**

Common carrier services:
- Communications Act of 1934; implementation—
  - Bell Operating Companies (BOCs) and Section 272 affiliates; operate independently requirement; comments due by 12-8-03; published 11-21-03 [FR 03-29054]

Digital television stations; table of assignments:
- New York; correction; comments due by 12-10-03; published 11-28-03 [FR 03-29627]

Practice and procedure:
- Radiofrequency electromagnetic fields; human exposure; comments due by 12-8-03; published 9-8-03 [FR 03-22624]

Television stations; table of assignments:
- Mississippi; comments due by 12-8-03; published 10-31-03 [FR 03-27429]

**HEALTH AND HUMAN SERVICES DEPARTMENT**

**Food and Drug Administration**

Reports and guidance documents; availability, etc.:
- Evaluating safety of antimicrobial new animal drugs with regard to their microbiological effects on bacteria of human health concern; Open for comments until further notice; published 10-27-03 [FR 03-27113]

**HOUSING AND URBAN DEVELOPMENT DEPARTMENT**

Mortgage and loan insurance programs:
- Single family mortgage insurance—
  - National Housing Act; up-front mortgage insurance premiums; comments due by 12-8-03; published 10-7-03 [FR 03-25214]

**LABOR DEPARTMENT**

**Occupational Safety and Health Administration**

Construction safety and health standards:
- Assigned protection factors; hearing; comments due by 12-12-03; published 11-12-03 [FR 03-28357]

**TRANSPORTATION DEPARTMENT**

**Federal Aviation Administration**

Airworthiness directives:
- Cessna; comments due by 12-8-03; published 10-3-03 [FR 03-25089]
- New Piper Aircraft, Inc.; comments due by 12-9-03; published 10-9-03 [FR 03-25581]
- Pacific Aerospace Corp., Ltd.; comments due by 12-8-03; published 10-30-03 [FR 03-27212]
- Pilatus Aircraft Ltd.; comments due by 12-10-03; published 10-9-03 [FR 03-25477]
- Raytheon; comments due by 12-7-03; published 10-10-03 [FR 03-25591]
- Rolls-Royce plc; comments due by 12-8-03; published 10-9-03 [FR 03-25578]

Airworthiness standards:
Special conditions—
Garmin International, Inc., Diamond DA-40 airplane; comments due by 12-8-03; published 11-7-03 [FR 03-28013]
Class C airspace; comments due by 12-8-03; published 9-15-03 [FR 03-23294]
Class D and E airspace; comments due by 12-12-03; published 11-12-03 [FR 03-28258]
Class E airspace; comments due by 12-8-03; published 11-6-03 [FR 03-27906]
Restricted areas; comments due by 12-8-03; published 10-8-03 [FR 03-25422]

**TREASURY DEPARTMENT**

**Internal Revenue Service**

Income taxes, etc.:
Section 482; treatment of services and allocation of income and deductions from intangibles; comments due by 12-9-03; published 9-10-03 [FR 03-22550]
Income taxes:
Special depreciation allowance; cross-reference; comments due by 12-8-03; published 9-8-03 [FR 03-22671]

**TREASURY DEPARTMENT**

**Alcohol and Tobacco Tax and Trade Bureau**

Alcohol; viticultural area designations:
Chehalem Mountains, WA and OR; comments due by 12-8-03; published 10-7-03 [FR 03-25372]
Yamhill-Carlton District, OR; comments due by 12-8-03; published 10-7-03 [FR 03-25373]

## LIST OF PUBLIC LAWS

This is a continuing list of public bills from the current session of Congress which have become Federal laws. It may be used in conjunction with ''P L U S'' (Public Laws Update Service) on 202–741–6043. This list is also available online at *http://www.nara.gov/fedreg/plawcurr.html*.

The text of laws is not published in the **Federal Register** but may be ordered in ''slip law'' (individual pamphlet) form from the Superintendent of Documents, U.S. Government Printing Office, Washington, DC 20402 (phone, 202–512–1808). The text will also be made available on the Internet from GPO Access at *http://www.access.gpo.gov/nara/nara005.html*. Some laws may not yet be available.

**S. 313/P.L. 108–130**
Animal Drug User Fee Act of 2003 (Nov. 18, 2003; 117 Stat. 1361)

**H.R. 274/P.L. 108–131**
Blackwater National Wildlife Refuge Expansion Act (Nov. 22, 2003; 117 Stat. 1372)

**H.R. 2559/P.L. 108–132**
Military Construction Appropriations Act, 2004 (Nov. 22, 2003; 117 Stat. 1374)

**H.R. 3054/P.L. 108–133**
District of Columbia Military Retirement Equity Act of 2003 (Nov. 22, 2003; 117 Stat. 1386)

**H.R. 3232/P.L. 108–134**
To reauthorize certain school lunch and child nutrition programs through March 31, 2004. (Nov. 22, 2003; 117 Stat. 1389)

**H.J. Res. 79/P.L. 108–135**
Making further continuing appropriations for the fiscal year 2004, and for other purposes. (Nov. 22, 2003; 117 Stat. 1391)

**Last List November 19, 2003**

## Public Laws Electronic Notification Service (PENS)

**PENS** is a free electronic mail notification service of newly enacted public laws. To subscribe, go to *http://listserv.gsa.gov/archives/publaws-l.html*

**Note:** This service is strictly for E-mail notification of new laws. The text of laws is not available through this service. **PENS** cannot respond to specific inquiries sent to this address.

## CFR CHECKLIST

This checklist, prepared by the Office of the Federal Register, is published weekly. It is arranged in the order of CFR titles, stock numbers, prices, and revision dates.

An asterisk (*) precedes each entry that has been issued since last week and which is now available for sale at the Government Printing Office.

A checklist of current CFR volumes comprising a complete CFR set, also appears in the latest issue of the LSA (List of CFR Sections Affected), which is revised monthly.

The CFR is available free on-line through the Government Printing Office's GPO Access Service at http://www.access.gpo.gov/nara/cfr/index.html. For information about GPO Access call the GPO User Support Team at 1-888-293-6498 (toll free) or 202-512-1530.

The annual rate for subscription to all revised paper volumes is $1195.00 domestic, $298.75 additional for foreign mailing.

Mail orders to the Superintendent of Documents, Attn: New Orders, P.O. Box 371954, Pittsburgh, PA 15250–7954. All orders must be accompanied by remittance (check, money order, GPO Deposit Account, VISA, Master Card, or Discover). Charge orders may be telephoned to the GPO Order Desk, Monday through Friday, at **(202) 512–1800** from 8:00 a.m. to 4:00 p.m. eastern time, or FAX your charge orders to **(202) 512-2250**.

| Title | Stock Number | Price | Revision Date |
|---|---|---|---|
| **1, 2 (2** Reserved) | (869–050–00001–6) | 9.00 | [4] Jan. 1, 2003 |
| **3** (2002 Compilation and Parts 100 and 101) | (869–050–00002–4) | 32.00 | [1] Jan. 1, 2003 |
| **4** | (869–050–00003–2) | 9.50 | Jan. 1, 2003 |
| **5 Parts:** | | | |
| 1–699 | (869–050–00004–1) | 57.00 | Jan. 1, 2003 |
| 700–1199 | (869–050–00005–9) | 46.00 | Jan. 1, 2003 |
| 1200–End, 6 (6 Reserved) | (869–050–00006–7) | 58.00 | Jan. 1, 2003 |
| **7 Parts:** | | | |
| 1–26 | (869–050–00007–5) | 40.00 | Jan. 1, 2003 |
| 27–52 | (869–050–00008–3) | 47.00 | Jan. 1, 2003 |
| 53–209 | (869–050–00009–1) | 36.00 | Jan. 1, 2003 |
| 210–299 | (869–050–00010–5) | 59.00 | Jan. 1, 2003 |
| 300–399 | (869–050–00011–3) | 43.00 | Jan. 1, 2003 |
| 400–699 | (869–050–00012–1) | 39.00 | Jan. 1, 2003 |
| 700–899 | (869–050–00013–0) | 42.00 | Jan. 1, 2003 |
| 900–999 | (869–050–00014–8) | 57.00 | Jan. 1, 2003 |
| 1000–1199 | (869–050–00015–6) | 23.00 | Jan. 1, 2003 |
| 1200–1599 | (869–050–00016–4) | 58.00 | Jan. 1, 2003 |
| 1600–1899 | (869–050–00017–2) | 61.00 | Jan. 1, 2003 |
| 1900–1939 | (869–050–00018–1) | 29.00 | [4] Jan. 1, 2003 |
| 1940–1949 | (869–050–00019–9) | 47.00 | Jan. 1, 2003 |
| 1950–1999 | (869–050–00020–2) | 45.00 | Jan. 1, 2003 |
| 2000–End | (869–050–00021–1) | 46.00 | Jan. 1, 2003 |
| **8** | (869–050–00022–9) | 58.00 | Jan. 1, 2003 |
| **9 Parts:** | | | |
| 1–199 | (869–050–00023–7) | 58.00 | Jan. 1, 2003 |
| 200–End | (869–050–00024–5) | 56.00 | Jan. 1, 2003 |
| **10 Parts:** | | | |
| 1–50 | (869–050–00025–3) | 58.00 | Jan. 1, 2003 |
| 51–199 | (869–050–00026–1) | 56.00 | Jan. 1, 2003 |
| 200–499 | (869–050–00027–0) | 44.00 | Jan. 1, 2003 |
| 500–End | (869–050–00028–8) | 58.00 | Jan. 1, 2003 |
| **11** | (869–050–00029–6) | 38.00 | Jan. 1, 2003 |
| **12 Parts:** | | | |
| 1–199 | (869–050–00030–0) | 30.00 | Jan. 1, 2003 |
| 200–219 | (869–050–00031–8) | 38.00 | Jan. 1, 2003 |
| 220–299 | (869–050–00032–6) | 58.00 | Jan. 1, 2003 |
| 300–499 | (869–050–00033–4) | 43.00 | Jan. 1, 2003 |
| 500–599 | (869–050–00034–2) | 38.00 | Jan. 1, 2003 |
| 600–899 | (869–050–00035–1) | 54.00 | Jan. 1, 2003 |
| 900–End | (869–050–00036–9) | 47.00 | Jan. 1, 2003 |
| **13** | (869–050–00037–7) | 47.00 | Jan. 1, 2003 |
| **14 Parts:** | | | |
| 1–59 | (869–050–00038–5) | 60.00 | Jan. 1, 2003 |
| 60–139 | (869–050–00039–3) | 58.00 | Jan. 1, 2003 |
| 140–199 | (869–050–00040–7) | 28.00 | Jan. 1, 2003 |
| 200–1199 | (869–050–00041–5) | 47.00 | Jan. 1, 2003 |
| 1200–End | (869–050–00042–3) | 43.00 | Jan. 1, 2003 |
| **15 Parts:** | | | |
| 0–299 | (869–050–00043–1) | 37.00 | Jan. 1, 2003 |
| 300–799 | (869–050–00044–0) | 57.00 | Jan. 1, 2003 |
| 800–End | (869–050–00045–8) | 40.00 | Jan. 1, 2003 |
| **16 Parts:** | | | |
| 0–999 | (869–050–00046–6) | 47.00 | Jan. 1, 2003 |
| 1000–End | (869–050–00047–4) | 57.00 | Jan. 1, 2003 |
| **17 Parts:** | | | |
| 1–199 | (869–050–00049–1) | 50.00 | Apr. 1, 2003 |
| 200–239 | (869–050–00050–4) | 58.00 | Apr. 1, 2003 |
| 240–End | (869–050–00051–2) | 62.00 | Apr. 1, 2003 |
| **18 Parts:** | | | |
| 1–399 | (869–050–00052–1) | 62.00 | Apr. 1, 2003 |
| 400–End | (869–050–00053–9) | 25.00 | Apr. 1, 2003 |
| **19 Parts:** | | | |
| 1–140 | (869–050–00054–7) | 60.00 | Apr. 1, 2003 |
| 141–199 | (869–050–00055–5) | 58.00 | Apr. 1, 2003 |
| 200–End | (869–050–00056–3) | 30.00 | Apr. 1, 2003 |
| **20 Parts:** | | | |
| 1–399 | (869–050–00057–1) | 50.00 | Apr. 1, 2003 |
| 400–499 | (869–050–00058–0) | 63.00 | Apr. 1, 2003 |
| 500–End | (869–050–00059–8) | 63.00 | Apr. 1, 2003 |
| **21 Parts:** | | | |
| 1–99 | (869–050–00060–1) | 40.00 | Apr. 1, 2003 |
| 100–169 | (869–050–00061–0) | 47.00 | Apr. 1, 2003 |
| 170–199 | (869–050–00062–8) | 50.00 | Apr. 1, 2003 |
| 200–299 | (869–050–00063–6) | 17.00 | Apr. 1, 2003 |
| 300–499 | (869–050–00064–4) | 29.00 | Apr. 1, 2003 |
| 500–599 | (869–050–00065–2) | 47.00 | Apr. 1, 2003 |
| 600–799 | (869–050–00066–1) | 15.00 | Apr. 1, 2003 |
| 800–1299 | (869–050–00067–9) | 58.00 | Apr. 1, 2003 |
| 1300–End | (869–050–00068–7) | 22.00 | Apr. 1, 2003 |
| **22 Parts:** | | | |
| 1–299 | (869–050–00069–5) | 62.00 | Apr. 1, 2003 |
| 300–End | (869–050–00070–9) | 44.00 | Apr. 1, 2003 |
| **23** | (869–050–00071–7) | 44.00 | Apr. 1, 2003 |
| **24 Parts:** | | | |
| 0–199 | (869–050–00072–5) | 58.00 | Apr. 1, 2003 |
| 200–499 | (869–050–00073–3) | 50.00 | Apr. 1, 2003 |
| 500–699 | (869–050–00074–1) | 30.00 | Apr. 1, 2003 |
| 700–1699 | (869–050–00075–0) | 61.00 | Apr. 1, 2003 |
| 1700–End | (869–050–00076–8) | 30.00 | Apr. 1, 2003 |
| **25** | (869–050–00077–6) | 63.00 | Apr. 1, 2003 |
| **26 Parts:** | | | |
| §§ 1.0–1–1.60 | (869–050–00078–4) | 49.00 | Apr. 1, 2003 |
| §§ 1.61–1.169 | (869–050–00079–2) | 63.00 | Apr. 1, 2003 |
| §§ 1.170–1.300 | (869–050–00080–6) | 57.00 | Apr. 1, 2003 |
| §§ 1.301–1.400 | (869–050–00081–4) | 46.00 | Apr. 1, 2003 |
| §§ 1.401–1.440 | (869–050–00082–2) | 61.00 | Apr. 1, 2003 |
| §§ 1.441–1.500 | (869–050–00083–1) | 50.00 | Apr. 1, 2003 |
| §§ 1.501–1.640 | (869–050–00084–9) | 49.00 | Apr. 1, 2003 |
| §§ 1.641–1.850 | (869–050–00085–7) | 60.00 | Apr. 1, 2003 |
| §§ 1.851–1.907 | (869–050–00086–5) | 60.00 | Apr. 1, 2003 |
| §§ 1.908–1.1000 | (869–050–00087–3) | 60.00 | Apr. 1, 2003 |
| §§ 1.1001–1.1400 | (869–050–00088–1) | 61.00 | Apr. 1, 2003 |
| §§ 1.1401–1.1503–2A | (869–050–00089–0) | 50.00 | Apr. 1, 2003 |
| §§ 1.1551–End | (869–050–00090–3) | 50.00 | Apr. 1, 2003 |
| 2–29 | (869–050–00091–1) | 60.00 | Apr. 1, 2003 |
| 30–39 | (869–050–00092–0) | 41.00 | Apr. 1, 2003 |
| 40–49 | (869–050–00093–8) | 26.00 | Apr. 1, 2003 |
| 50–299 | (869–050–00094–6) | 41.00 | Apr. 1, 2003 |
| 300–499 | (869–050–00095–4) | 61.00 | Apr. 1, 2003 |
| 500–599 | (869–050–00096–2) | 12.00 | [5] Apr. 1, 2003 |
| 600–End | (869–050–00097–1) | 17.00 | Apr. 1, 2003 |

| Title | Stock Number | Price | Revision Date |
|---|---|---|---|
| **27 Parts:** | | | |
| 1–199 | (869–050–00098–9) | 63.00 | Apr. 1, 2003 |
| 200–End | (869–050–00099–7) | 25.00 | Apr. 1, 2003 |
| **28 Parts:** | | | |
| 0–42 | (869–050–00100–4) | 61.00 | July 1, 2003 |
| 43–End | (869–050–00101–2) | 58.00 | July 1, 2003 |
| **29 Parts:** | | | |
| 0–99 | (869–050–00102–1) | 50.00 | July 1, 2003 |
| 100–499 | (869–050–00103–9) | 22.00 | July 1, 2003 |
| 500–899 | (869–050–00104–7) | 61.00 | July 1, 2003 |
| 900–1899 | (869–050–00105–5) | 35.00 | July 1, 2003 |
| 1900–1910 (§§ 1900 to 1910.999) | (869–050–00106–3) | 61.00 | July 1, 2003 |
| 1910 (§§ 1910.1000 to end) | (869–050–00107–1) | 46.00 | July 1, 2003 |
| 1911–1925 | (869–050–00108–0) | 30.00 | July 1, 2003 |
| 1926 | (869–050–00109–8) | 50.00 | July 1, 2003 |
| 1927–End | (869–050–00110–1) | 62.00 | July 1, 2003 |
| **30 Parts:** | | | |
| 1–199 | (869–050–00111–0) | 57.00 | July 1, 2003 |
| 200–699 | (869–050–00112–8) | 50.00 | July 1, 2003 |
| 700–End | (869–050–00113–6) | 57.00 | July 1, 2003 |
| **31 Parts:** | | | |
| 0–199 | (869–050–00114–4) | 40.00 | July 1, 2003 |
| 200–End | (869–050–00115–2) | 64.00 | July 1, 2003 |
| **32 Parts:** | | | |
| 1–39, Vol. I | | 15.00 | [2] July 1, 1984 |
| 1–39, Vol. II | | 19.00 | [2] July 1, 1984 |
| 1–39, Vol. III | | 18.00 | [2] July 1, 1984 |
| 1–190 | (869–050–00116–1) | 60.00 | July 1, 2003 |
| 191–399 | (869–050–00117–9) | 63.00 | July 1, 2003 |
| 400–629 | (869–050–00118–7) | 50.00 | July 1, 2003 |
| 630–699 | (869–050–00119–5) | 37.00 | [7] July 1, 2003 |
| 700–799 | (869–050–00120–9) | 46.00 | July 1, 2003 |
| 800–End | (869–050–00121–7) | 47.00 | July 1, 2003 |
| **33 Parts:** | | | |
| 1–124 | (869–050–00122–5) | 55.00 | July 1, 2003 |
| 125–199 | (869–050–00123–3) | 61.00 | July 1, 2003 |
| 200–End | (869–050–00124–1) | 50.00 | July 1, 2003 |
| **34 Parts:** | | | |
| 1–299 | (869–050–00125–0) | 49.00 | July 1, 2003 |
| 300–399 | (869–050–00126–8) | 43.00 | [7] July 1, 2003 |
| 400–End | (869–050–00127–6) | 61.00 | July 1, 2003 |
| **35** | (869–050–00128–4) | 10.00 | [6] July 1, 2003 |
| **36 Parts** | | | |
| 1–199 | (869–050–00129–2) | 37.00 | July 1, 2003 |
| 200–299 | (869–050–00130–6) | 37.00 | July 1, 2003 |
| 300–End | (869–050–00131–4) | 61.00 | July 1, 2003 |
| **37** | (869–050–00132–2) | 50.00 | July 1, 2003 |
| **38 Parts:** | | | |
| 0–17 | (869–050–00133–1) | 58.00 | July 1, 2003 |
| 18–End | (869–050–00134–9) | 62.00 | July 1, 2003 |
| **39** | (869–050–00135–7) | 41.00 | July 1, 2003 |
| **40 Parts:** | | | |
| 1–49 | (869–050–00136–5) | 60.00 | July 1, 2003 |
| 50–51 | (869–050–00137–3) | 44.00 | July 1, 2003 |
| 52 (52.01–52.1018) | (869–050–00138–1) | 58.00 | July 1, 2003 |
| 52 (52.1019–End) | (869–050–00139–0) | 61.00 | July 1, 2003 |
| 53–59 | (869–050–00140–3) | 31.00 | July 1, 2003 |
| 60 (60.1–End) | (869–050–00141–1) | 58.00 | July 1, 2003 |
| 60 (Apps) | (869–050–00142–0) | 51.00 | [8] July 1, 2003 |
| 61–62 | (869–050–00143–8) | 43.00 | July 1, 2003 |
| 63 (63.1–63.599) | (869–050–00144–6) | 58.00 | July 1, 2003 |
| 63 (63.600–63.1199) | (869–050–00145–4) | 50.00 | July 1, 2003 |
| 63 (63.1200–63.1439) | (869–050–00146–2) | 50.00 | July 1, 2003 |
| 63 (63.1440–End) | (869–050–00147–1) | 64.00 | July 1, 2003 |
| 64–71 | (869–050–00148–9) | 29.00 | July 1, 2003 |
| 72–80 | (869–050–00149–7) | 61.00 | July 1, 2003 |
| 81–85 | (869–050–00150–1) | 50.00 | July 1, 2003 |
| 86 (86.1–86.599–99) | (869–050–00151–9) | 57.00 | July 1, 2003 |
| 86 (86.600–1–End) | (869–050–00152–7) | 50.00 | July 1, 2003 |
| 87–99 | (869–050–00153–5) | 60.00 | July 1, 2003 |
| 100–135 | (869–050–00154–3) | 43.00 | July 1, 2003 |
| 136–149 | (869–150–00155–1) | 61.00 | July 1, 2003 |
| 150–189 | (869–050–00156–0) | 49.00 | July 1, 2003 |
| 190–259 | (869–050–00157–8) | 39.00 | July 1, 2003 |
| 260–265 | (869–050–00158–6) | 50.00 | July 1, 2003 |
| 266–299 | (869–048–00156–5) | 47.00 | July 1, 2002 |
| 300–399 | (869–050–00160–8) | 42.00 | July 1, 2003 |
| 400–424 | (869–050–00161–6) | 56.00 | July 1, 2003 |
| 425–699 | (869–050–00162–4) | 61.00 | July 1, 2003 |
| 700–789 | (869–050–00163–2) | 61.00 | July 1, 2003 |
| 790–End | (869–050–00164–1) | 58.00 | July 1, 2003 |
| **41 Chapters:** | | | |
| 1, 1–1 to 1–10 | | 13.00 | [3] July 1, 1984 |
| 1, 1–11 to Appendix, 2 (2 Reserved) | | 13.00 | [3] July 1, 1984 |
| 3–6 | | 14.00 | [3] July 1, 1984 |
| 7 | | 6.00 | [3] July 1, 1984 |
| 8 | | 4.50 | [3] July 1, 1984 |
| 9 | | 13.00 | [3] July 1, 1984 |
| 10–17 | | 9.50 | [3] July 1, 1984 |
| 18, Vol. I, Parts 1–5 | | 13.00 | [3] July 1, 1984 |
| 18, Vol. II, Parts 6–19 | | 13.00 | [3] July 1, 1984 |
| 18, Vol. III, Parts 20–52 | | 13.00 | [3] July 1, 1984 |
| 19–100 | | 13.00 | [3] July 1, 1984 |
| 1–100 | (869–048–00162–0) | 23.00 | July 1, 2002 |
| 101 | (869–050–00166–7) | 24.00 | July 1, 2003 |
| 102–200 | (869–050–00167–5) | 50.00 | July 1, 2003 |
| 201–End | (869–050–00168–3) | 22.00 | July 1, 2003 |
| **42 Parts:** | | | |
| 1–399 | (869–048–00166–2) | 56.00 | Oct. 1, 2002 |
| 400–429 | (869–048–00167–1) | 59.00 | Oct. 1, 2002 |
| 430–End | (869–048–00168–9) | 61.00 | Oct. 1, 2002 |
| **43 Parts:** | | | |
| 1–999 | (869–048–00169–7) | 47.00 | Oct. 1, 2002 |
| 1000–end | (869–048–00170–1) | 59.00 | Oct. 1, 2002 |
| ***44** | (869–050–00174–8) | 50.00 | Oct. 1, 2003 |
| **45 Parts:** | | | |
| *1–199 | (869–050–00175–6) | 60.00 | Oct. 1, 2003 |
| 200–499 | (869–048–00173–5) | 31.00 | [9] Oct. 1, 2002 |
| 500–1199 | (869–048–00174–3) | 47.00 | Oct. 1, 2002 |
| *1200–End | (869–050–00178–1) | 60.00 | Oct. 1, 2003 |
| **46 Parts:** | | | |
| 1–40 | (869–048–00176–0) | 44.00 | Oct. 1, 2002 |
| 41–69 | (869–048–00177–8) | 37.00 | Oct. 1, 2002 |
| 70–89 | (869–050–00181–1) | 14.00 | Oct. 1, 2003 |
| 90–139 | (869–048–00179–4) | 42.00 | Oct. 1, 2002 |
| 140–155 | (869–048–00180–8) | 24.00 | [9] Oct. 1, 2002 |
| 156–165 | (869–048–00181–6) | 31.00 | [9] Oct. 1, 2002 |
| 166–199 | (869–048–00182–4) | 44.00 | Oct. 1, 2002 |
| 200–499 | (869–048–00183–2) | 37.00 | Oct. 1, 2002 |
| 500–End | (869–050–00187–0) | 25.00 | Oct. 1, 2003 |
| **47 Parts:** | | | |
| 0–19 | (869–048–00185–9) | 57.00 | Oct. 1, 2002 |
| 20–39 | (869–048–00186–7) | 45.00 | Oct. 1, 2002 |
| 40–69 | (869–048–00187–5) | 36.00 | Oct. 1, 2002 |
| 70–79 | (869–048–00188–3) | 58.00 | Oct. 1, 2002 |
| 80–End | (869–048–00189–1) | 57.00 | Oct. 1, 2002 |
| **48 Chapters:** | | | |
| *1 (Parts 1–51) | (869–050–00193–4) | 63.00 | Oct. 1, 2003 |
| 1 (Parts 52–99) | (869–048–00191–3) | 47.00 | Oct. 1, 2002 |
| 2 (Parts 201–299) | (869–048–00192–1) | 53.00 | Oct. 1, 2002 |
| 3–6 | (869–048–00193–0) | 30.00 | Oct. 1, 2002 |
| 7–14 | (869–048–00194–8) | 47.00 | Oct. 1, 2002 |
| 15–28 | (869–048–00195–6) | 55.00 | Oct. 1, 2002 |
| 29–End | (869–050–00199–3) | 38.00 | [9] Oct. 1, 2003 |
| **49 Parts:** | | | |
| 1–99 | (869–048–00197–2) | 56.00 | Oct. 1, 2002 |
| 100–185 | (869–048–00198–1) | 60.00 | Oct. 1, 2002 |
| 186–199 | (869–050–00202–7) | 20.00 | Oct. 1, 2003 |

| Title | Stock Number | Price | Revision Date |
|---|---|---|---|
| 200–399 | (869–048–00200–6) | 61.00 | Oct. 1, 2002 |
| 400–999 | (869–048–00201–4) | 61.00 | Oct. 1, 2002 |
| 600–999 | (869–050–00205–1) | 22.00 | Oct. 1, 2003 |
| 1000–1199 | (869–048–00202–2) | 25.00 | Oct. 1, 2002 |
| 1200–End | (869–048–00203–1) | 30.00 | Oct. 1, 2002 |
| **50 Parts:** | | | |
| 1–17 | (869–048–00204–9) | 60.00 | Oct. 1, 2002 |
| 18–199 | (869–048–00205–7) | 40.00 | Oct. 1, 2002 |
| 200–599 | (869–048–00206–5) | 38.00 | Oct. 1, 2002 |
| 600–End | (869–048–00207–3) | 58.00 | Oct. 1, 2002 |
| CFR Index and Findings Aids | (869–050–00048–2) | 59.00 | Jan. 1, 2003 |
| Complete 2003 CFR set | | 1,195.00 | 2003 |
| Microfiche CFR Edition: | | | |
| Subscription (mailed as issued) | | 298.00 | 2003 |
| Individual copies | | 2.00 | 2003 |
| Complete set (one-time mailing) | | 298.00 | 2002 |
| Complete set (one-time mailing) | | 290.00 | 2001 |

[1] Because Title 3 is an annual compilation, this volume and all previous volumes should be retained as a permanent reference source.

[2] The July 1, 1985 edition of 32 CFR Parts 1–189 contains a note only for Parts 1–39 inclusive. For the full text of the Defense Acquisition Regulations in Parts 1–39, consult the three CFR volumes issued as of July 1, 1984, containing those parts.

[3] The July 1, 1985 edition of 41 CFR Chapters 1–100 contains a note only for Chapters 1 to 49 inclusive. For the full text of procurement regulations in Chapters 1 to 49, consult the eleven CFR volumes issued as of July 1, 1984 containing those chapters.

[4] No amendments to this volume were promulgated during the period January 1, 2002, through January 1, 2003. The CFR volume issued as of January 1, 2002 should be retained.

[5] No amendments to this volume were promulgated during the period April 1, 2000, through April 1, 2001. The CFR volume issued as of April 1, 2000 should be retained.

[6] No amendments to this volume were promulgated during the period July 1, 2000, through July 1, 2001. The CFR volume issued as of July 1, 2000 should be retained.

[7] No amendments to this volume were promulgated during the period July 1, 2002, through July 1, 2003. The CFR volume issued as of July 1, 2002 should be retained.

[8] No amendments to this volume were promulgated during the period July 1, 2001, through July 1, 2002. The CFR volume issued as of July 1, 2001 should be retained.

[9] No amendments to this volume were promulgated during the period October 1, 2001, through October 1, 2002. The CFR volume issued as of October 1, 2001 should be retained.

## TABLE OF EFFECTIVE DATES AND TIME PERIODS—DECEMBER 2003

This table is used by the Office of the Federal Register to compute certain dates, such as effective dates and comment deadlines, which appear in agency documents. In computing these dates, the day after publication is counted as the first day.

When a date falls on a weekend or holiday, the next Federal business day is used. (See 1 CFR 18.17)

A new table will be published in the first issue of each month.

| DATE OF FR PUBLICATION | 15 DAYS AFTER PUBLICATION | 30 DAYS AFTER PUBLICATION | 45 DAYS AFTER PUBLICATION | 60 DAYS AFTER PUBLICATION | 90 DAYS AFTER PUBLICATION |
|---|---|---|---|---|---|
| Dec 1 | Dec 16 | Dec 31 | Jan 15 | Jan 30 | March 3 |
| Dec 2 | Dec 17 | Jan 2 | Jan 16 | Feb 2 | March 3 |
| Dec 3 | Dec 18 | Jan 2 | Jan 20 | Feb 2 | March 3 |
| Dec 4 | Dec 19 | Jan 5 | Jan 20 | Feb 3 | March 4 |
| Dec 5 | Dec 22 | Jan 5 | Jan 20 | Feb 3 | March 5 |
| Dec 8 | Dec 23 | Jan 7 | Jan 22 | Feb 6 | March 10 |
| Dec 9 | Dec 24 | Jan 8 | Jan 23 | Feb 9 | March 10 |
| Dec 10 | Dec 26 | Jan 9 | Jan 26 | Feb 9 | March 10 |
| Dec 11 | Dec 26 | Jan 12 | Jan 26 | Feb 9 | March 11 |
| Dec 12 | Dec 29 | Jan 12 | Jan 26 | Feb 10 | March 12 |
| Dec 15 | Dec 30 | Jan 14 | Jan 29 | Feb 13 | March 17 |
| Dec 16 | Dec 31 | Jan 15 | Jan 30 | Feb 17 | March 17 |
| Dec 17 | Jan 2 | Jan 16 | Feb 2 | Feb 17 | March 17 |
| Dec 18 | Jan 2 | Jan 20 | Feb 2 | Feb 17 | March 18 |
| Dec 19 | Jan 5 | Jan 20 | Feb 3 | Feb 17 | March 19 |
| Dec 22 | Jan 6 | Jan 21 | Feb 5 | Feb 20 | March 24 |
| Dec 23 | Jan 7 | Jan 22 | Feb 6 | Feb 23 | March 24 |
| Dec 24 | Jan 8 | Jan 23 | Feb 9 | Feb 23 | March 24 |
| Dec 26 | Jan 12 | Jan 26 | Feb 9 | Feb 24 | March 26 |
| Dec 29 | Jan 13 | Jan 28 | Feb 12 | Feb 27 | March 31 |
| Dec 30 | Jan 14 | Jan 29 | Feb 13 | Mar 1 | March 31 |
| Dec 31 | Jan 15 | Jan 30 | Feb 17 | March 3 | March 31 |